Introduction to VLSI Design

Lecture 13 Testing

Zhuo Feng

Outline

- **Testing**
  - Logic Verification
  - Silicon Debug
  - Manufacturing Test
- **Fault Models**
- **Observability and Controllability**
- **Design for Test**
  - Scan
  - BIST
- **Boundary Scan**

Testing

- **Testing is one of the most expensive parts of chips**
  - Logic verification accounts for > 50% of design effort for many chips
  - Debug time after fabrication has enormous opportunity cost
  - Shipping defective parts can sink a company

- **Example: Intel FDIV bug (1994)**
  - Logic error not caught until > 1M units shipped
  - Recall cost $450M (!!!)

Logic Verification

- **Does the chip simulate correctly?**
  - Usually done at HDL level
  - Verification engineers write test bench for HDL
    - Can’t test all cases
    - Look for corner cases
    - Try to break logic design
- **Ex: 32-bit adder**
  - Test all combinations of corner cases as inputs:
    - 0, 1, 2, 2^{31}-1, -1, -2^{31}, a few random numbers
- **Good tests require ingenuity**

Silicon Debug

- **Test the first chips back from fabrication**
  - If you are lucky, they work the first time
  - If not…
- **Logic bugs vs. electrical failures**
  - Most chip failures are logic bugs from inadequate simulation
  - Some are electrical failures
    - Crosstalk
    - Dynamic nodes: leakage, charge sharing
    - Ratio failures
  - A few are tool or methodology failures (e.g. DRC)
- **Fix the bugs and fabricate a corrected chip**

Shmoo Plots

- **How to diagnose failures?**
  - Hard to access chips
    - Picoprobes
    - Electron beam
    - Laser voltage probing
    - Built-in self-test
- **Shmoo plots**
  - Vary voltage, frequency
  - Look for cause of electrical failures

Clock period in ns on the left, frequency increases going up
Voltage on the bottom, increase left to right

** indicates a failure*

```
1.0   *   *   *   *   *   *
1.1   *   *   *   *   *
1.2   *   *   *   *
1.3   *   *   *
1.4   *   *
1.5   *
      1.0 1.1 1.2 1.3 1.4 1.5
```

Normal
Well-behaved shmoo
Typical Speedpath

```
1.0   *       *       *
1.1       *       *       *
1.2   *       *       *
1.3       *       *       *
1.4   *       *       *
1.5       *       *       *
      1.0 1.1 1.2 1.3 1.4 1.5
```

"Brick Wall"
Bistable
Initialization

```
1.0           *   *   *
1.1           *   *   *
1.2           *   *   *
1.3           *   *   *
1.4           *   *   *
1.5           *   *   *
      1.0 1.1 1.2 1.3 1.4 1.5
```

"Wall"
Fails at a certain voltage
Coupling, charge share, races

```
1.0       *   *   *   *   *
1.1           *   *   *   *
1.2               *   *   *
1.3                   *   *
1.4                       *
1.5                       *
      1.0 1.1 1.2 1.3 1.4 1.5
```

"Reverse speedpath"
Increase in voltage reduces frequency
Speedpath, leakage

```
1.0
1.1
1.2
1.3
1.4   *   *   *   *   *   *
1.5   *   *   *   *   *   *
      1.0 1.1 1.2 1.3 1.4 1.5
```

"Floor"
Works at high but not low frequency
Leakage

```
1.0
1.1
1.2   *   *   *   *
1.3           *   *
1.4
1.5
      1.0 1.1 1.2 1.3 1.4 1.5
```

"Finger"
Fails at a specific point in the shmoo
Coupling

Manufacturing Test

- **A speck of dust on a wafer is sufficient to kill chip**
- ***Yield* of any chip is < 100%**
  - Must test chips after manufacturing before delivery to customers to only ship good parts
- **Manufacturing testers are very expensive**
  - Minimize time on tester
  - Careful selection of *test vectors*

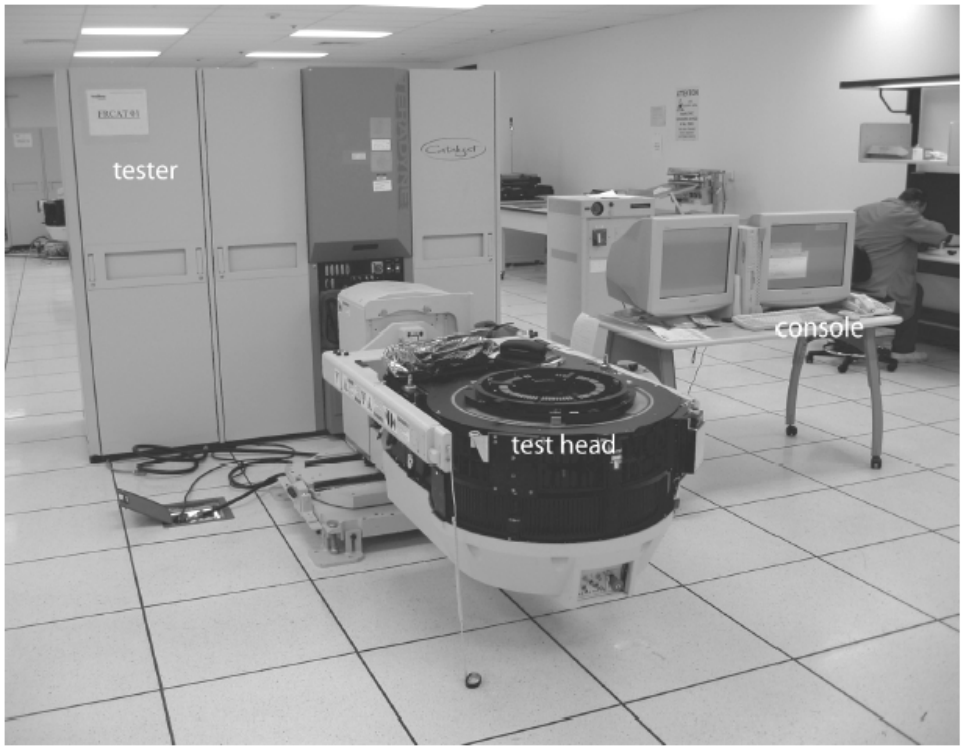

Manufacturing Failures

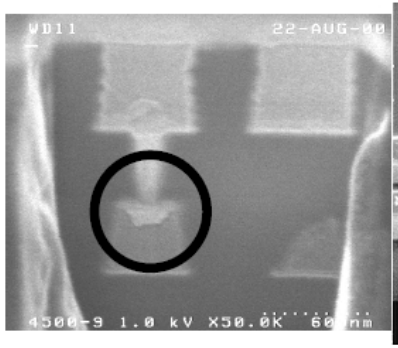

Metal 1 Shelving

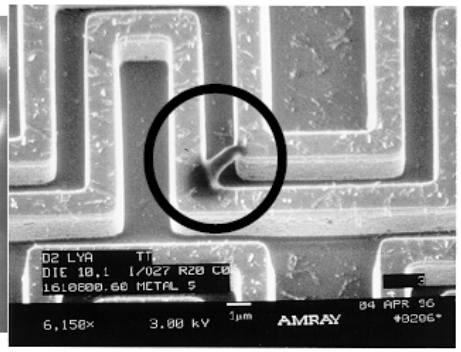

Metal 5 film particle
(bridging defect)

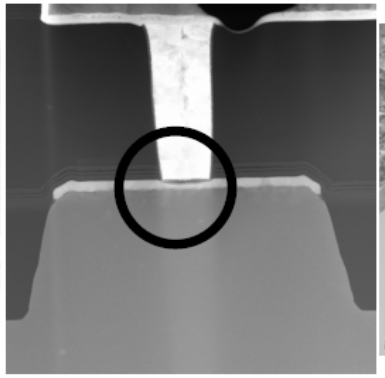

Open defect

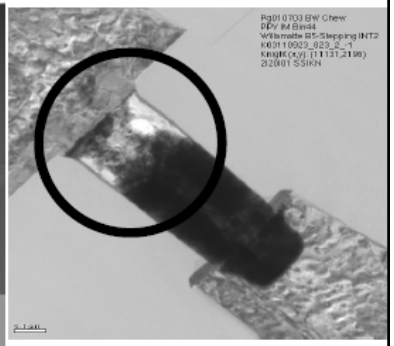

Spongy Via2
(Infant mortality)

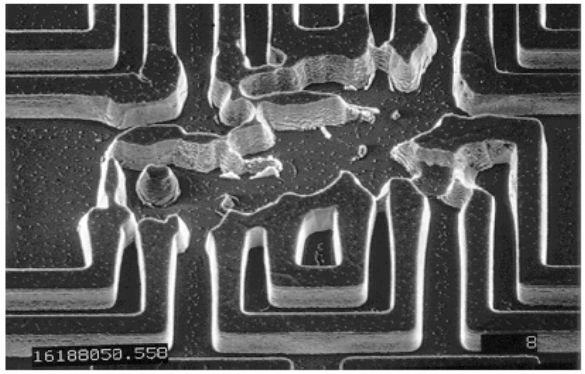

Metal 5 blocked etch
(patterning defect)

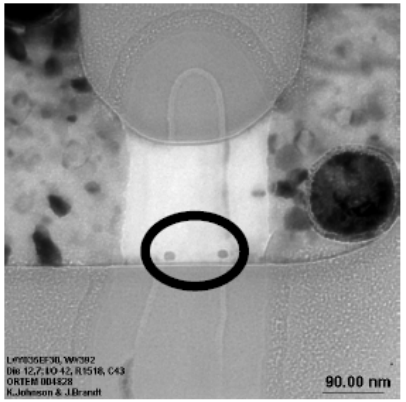

Spot defects
"Co" Defect under Gate

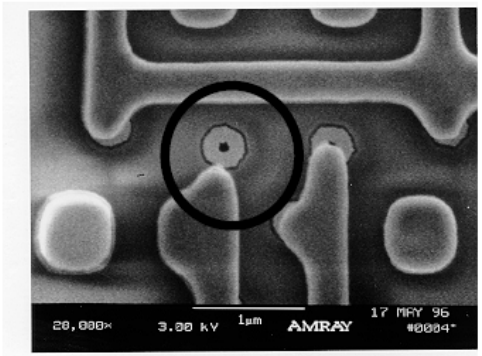

Metal 1 missing pattern
(open at contact)

SEM images courtesy Intel Corporation

Stuck-At Faults

- **How does a chip fail?**
  - Usually failures are shorts between two conductors or opens in a conductor
  - This can cause very complicated behavior
- **A simpler model: *Stuck-At***
  - Assume all failures cause nodes to be “stuck-at” 0 or 1, i.e. shorted to GND or V_{DD}
  - Not quite true, but works well in practice

Examples

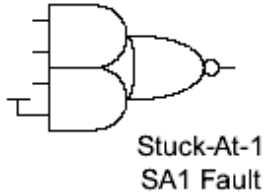

Stuck-At-1
SA1 Fault

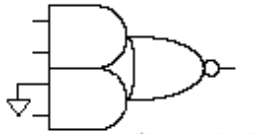

Stuck-At-0
SA0 Fault

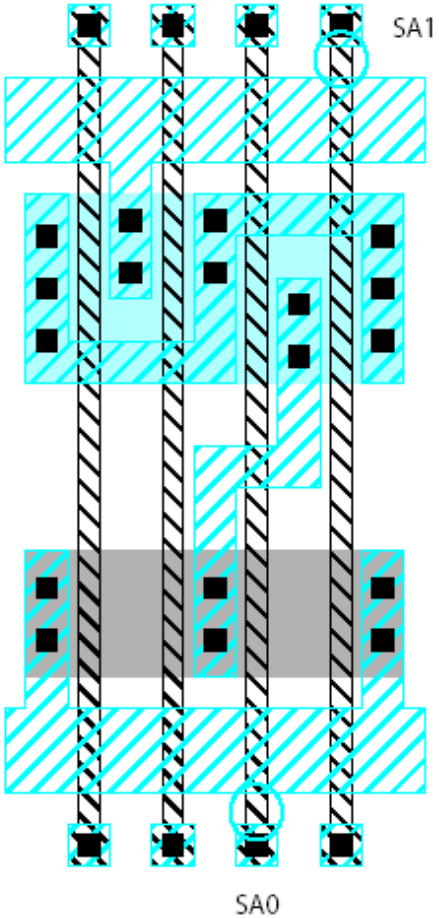

Observability & Controllability

- ***Observability*: ease of observing a node by watching external output pins of the chip**
- ***Controllability*: ease of forcing a node to 0 or 1 by driving input pins of the chip**
- **Combinational logic is usually easy to observe and control**
- **Finite state machines can be very difficult, requiring many cycles to enter desired state**
  - Especially if state transition diagram is not known to the test engineer

Test Pattern Generation

- **Manufacturing test ideally would check every node in the circuit to prove it is not stuck.**
- **Apply the smallest sequence of test vectors necessary to prove each node is not stuck.**
- **Good observability and controllability reduces number of test vectors required for manufacturing test.**
  - Reduces the cost of testing
  - Motivates design-for-test

Test Example

	SA1	SA0
A_3	{0110}	{1110}
A_2	{1010}	{1110}
A_1	{0100}	{0110}
A_0	{0110}	{0111}
n1	{1110}	{0110}
n2	{0110}	{0100}
n3	{0101}	{0110}
Y	{0110}	{1110}

- **Minimum set: {0100, 0101, 0110, 0111, 1010, 1110}**

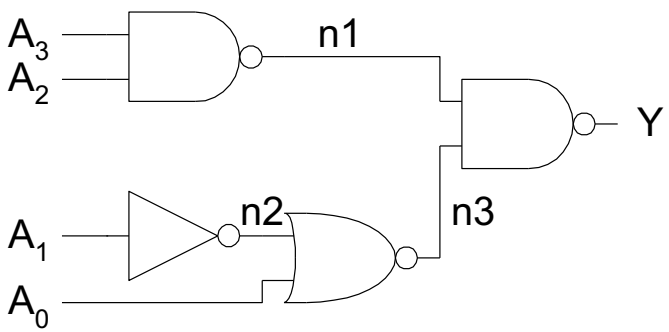

Design for Test

- **Design the chip to increase observability and controllability**
- **If each register could be observed and controlled, test problem reduces to testing combinational logic between registers.**
- **Better yet, logic blocks could enter test mode where they generate test patterns and report the results automatically.**

Scan

- **Convert each flip-flop to a scan register**
  - Only costs one extra multiplexer
- **Normal mode: flip-flops behave as usual**
- **Scan mode: flip-flops behave as shift register**

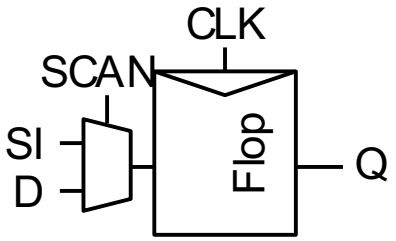

- **Contents of flops can be scanned out and new values scanned in**

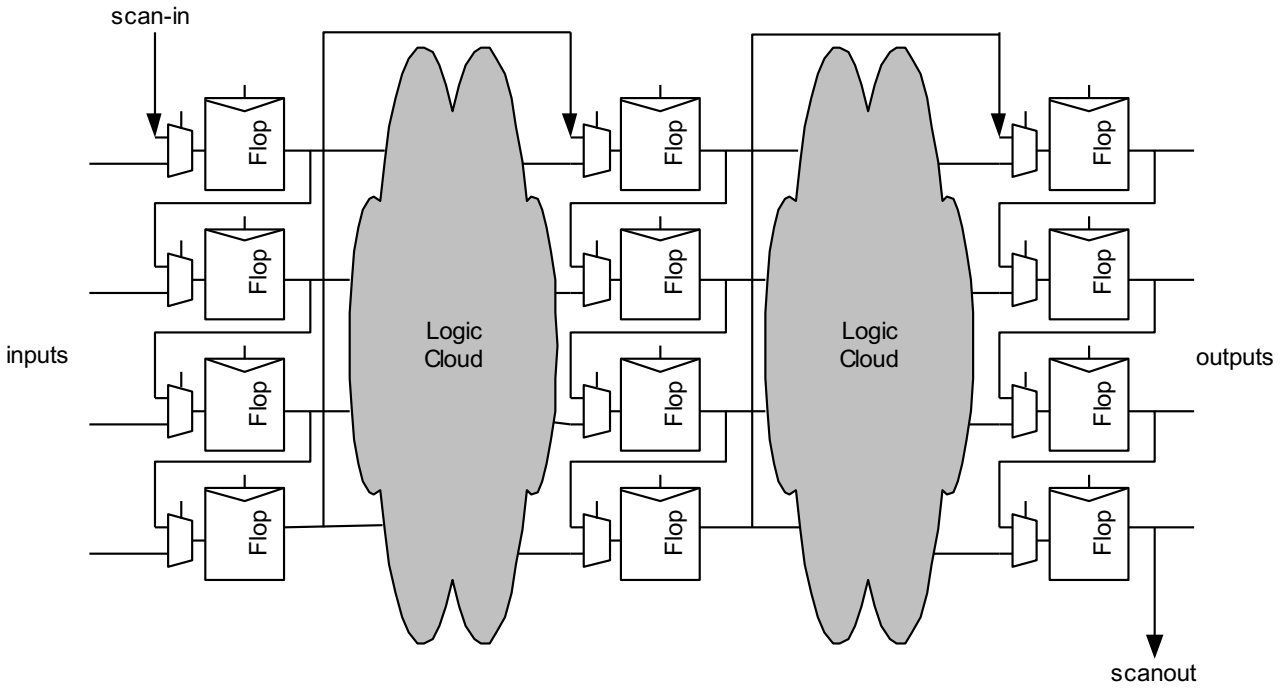

Scannable Flip-flops

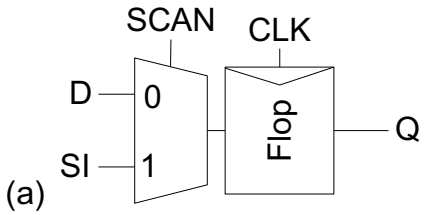

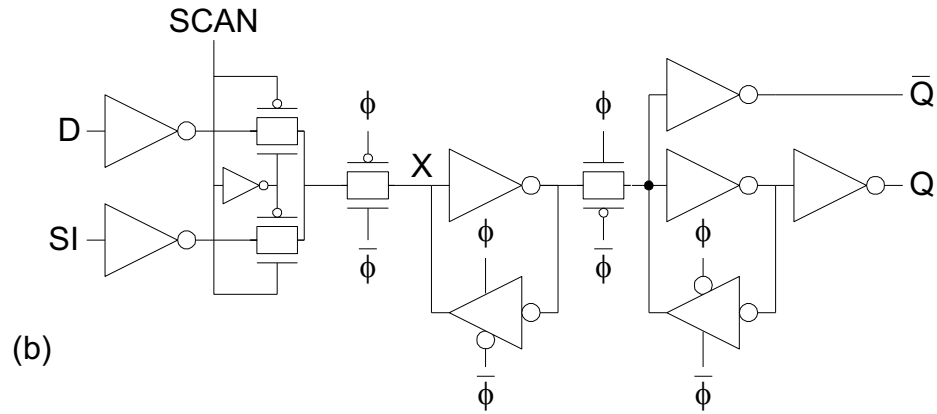

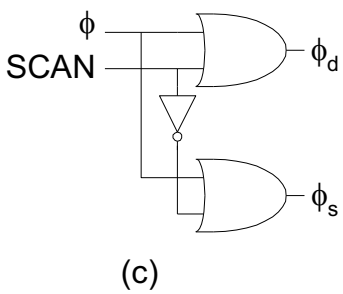

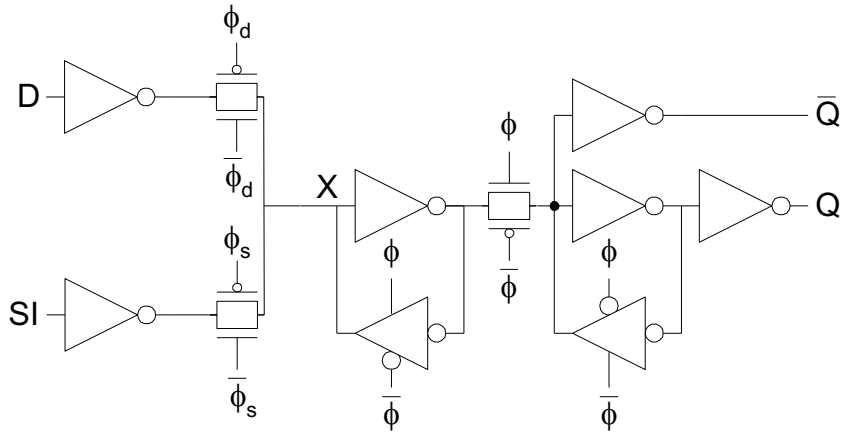

ATPG

- Test pattern generation is tedious
- Automatic Test Pattern Generation (ATPG) tools produce a good set of vectors for each block of combinational logic
- Scan chains are used to control and observe the blocks
- Complete coverage requires a large number of vectors, raising the cost of test
- Most products settle for covering 90+% of potential stuck-at faults

Built-in Self-test

- **Built-in self-test lets blocks test themselves**
  - Generate pseudo-random inputs to comb. logic
  - Combine outputs into a *syndrome*
  - With high probability, block is fault-free if it produces the expected syndrome

PRSG

Linear Feedback Shift Register

- Shift register with input taken from XOR of state
- *Pseudo-Random Sequence Generator*

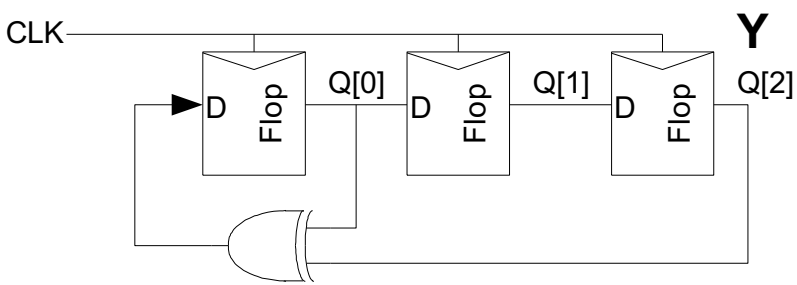

Flops reset to 111

Step	Y
0	111
1	110
2	101
3	010
4	100
5	001
6	011
7	111 (repeats)

BILBO

■ Built-in Logic Block Observer

- ► Combine scan with PRSG & signature analysis

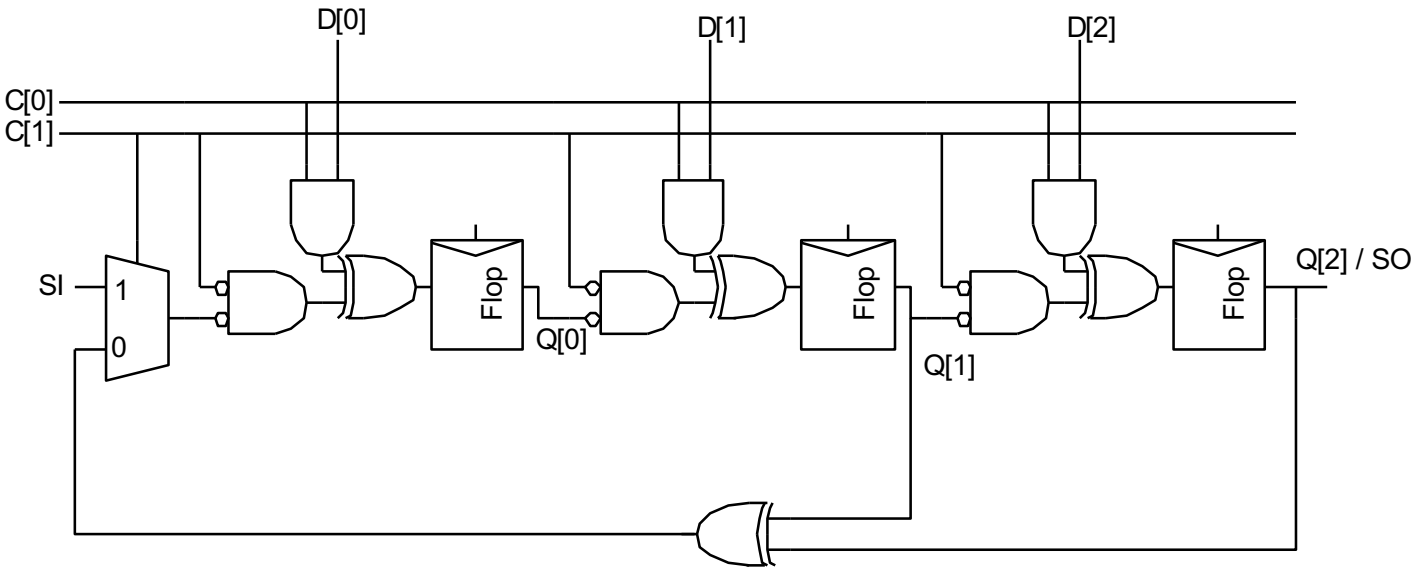

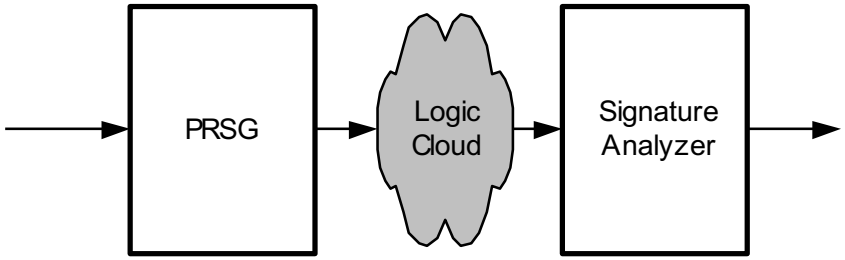

MODE	C[1]	C[0]
Scan	0	0
Test	0	1
Reset	1	0
Normal	1	1

Boundary Scan

- **Testing boards is also difficult**
  - Need to verify solder joints are good
    - Drive a pin to 0, then to 1
    - Check that all connected pins get the values
- **Through-hold boards used “bed of nails”**
- **SMT and BGA boards cannot easily contact pins**
- **Build capability of observing and controlling pins into each chip to make board test easier**

Boundary Scan Example

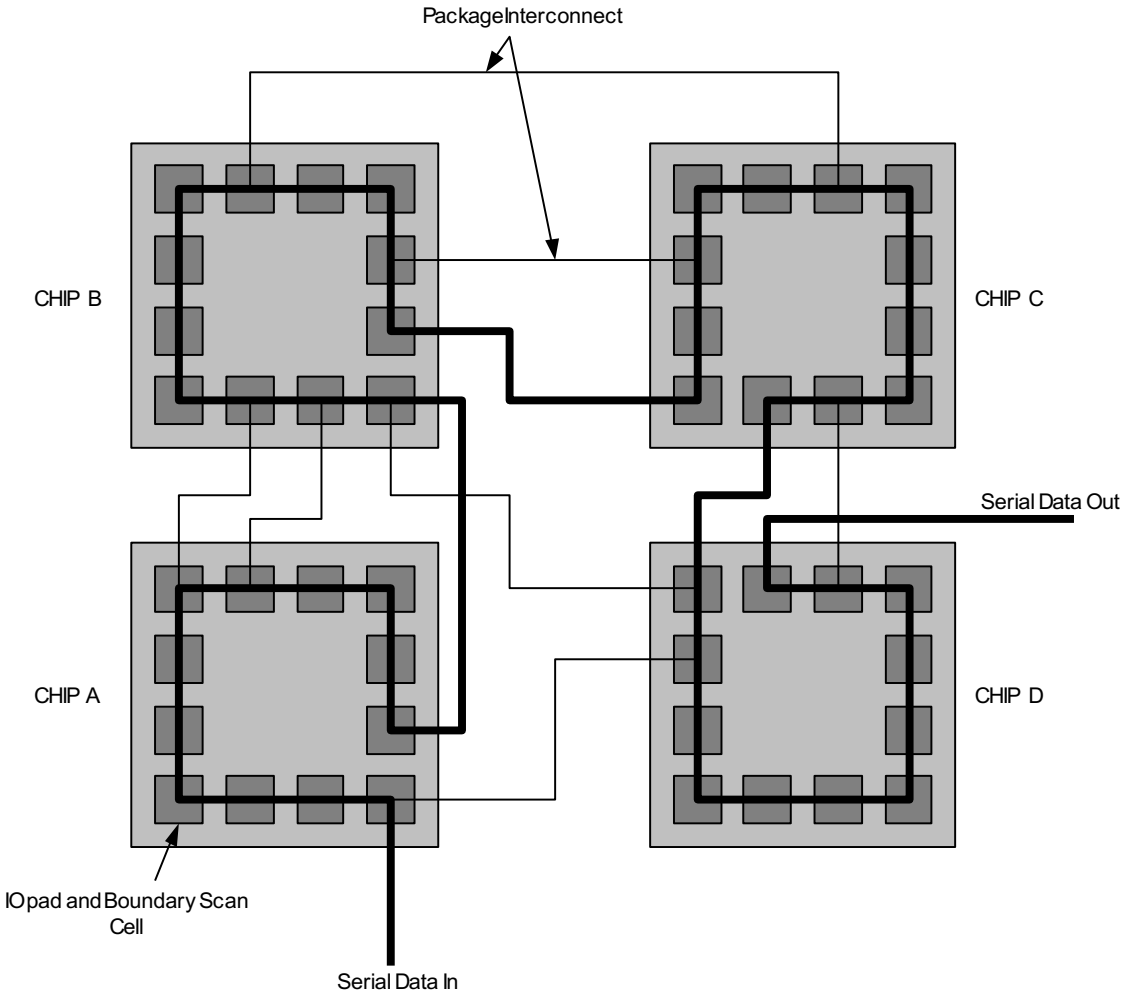

Boundary Scan Interface

- **Boundary scan is accessed through five pins**
  - TCK: test clock
  - TMS: test mode select
  - TDI: test data in
  - TDO: test data out
  - TRST*: test reset (optional)

- **Chips with internal scan chains can access the chains through boundary scan for unified test strategy.**

Summary

- **Think about testing from the beginning**
  - Simulate as you go
  - Plan for test after fabrication

- **“If you don’t test it, it won’t work! (Guaranteed)”**