Introduction to VLSI Design

Lecture 2 CMOS Circuits and Layout

Zhuo Feng

Transistors as Switches

- **We can view MOS transistors as electrically controlled switches**
- **Voltage at gate controls path from source to drain**

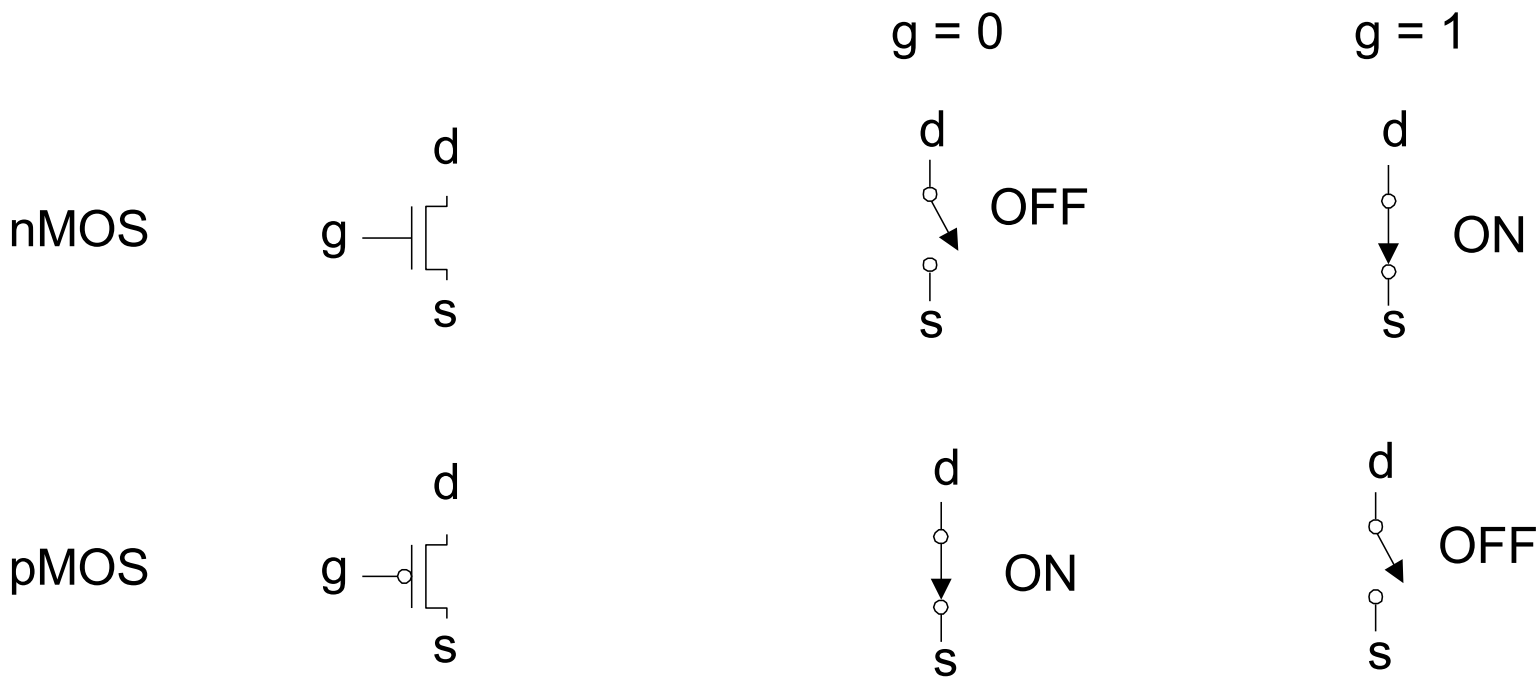

Complementary CMOS

- **Complementary CMOS logic gates**
  - NMOS *pull-down network*
  - PMOS *pull-up network*

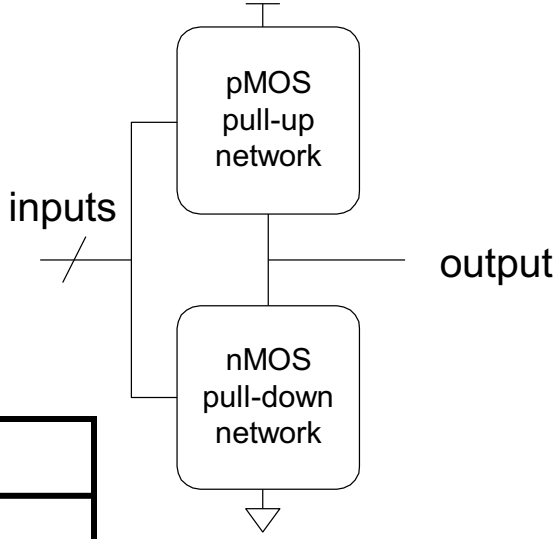

	Pull-up OFF	Pull-up ON
Pull-down OFF	Z (float)	1
Pull-down ON	0	X (shorted)

Series and Parallel

- **NMOS: 1 = ON**
- **PMOS: 0 = ON**
- ***Series*: both must be ON**
- ***Parallel*: either can be ON**

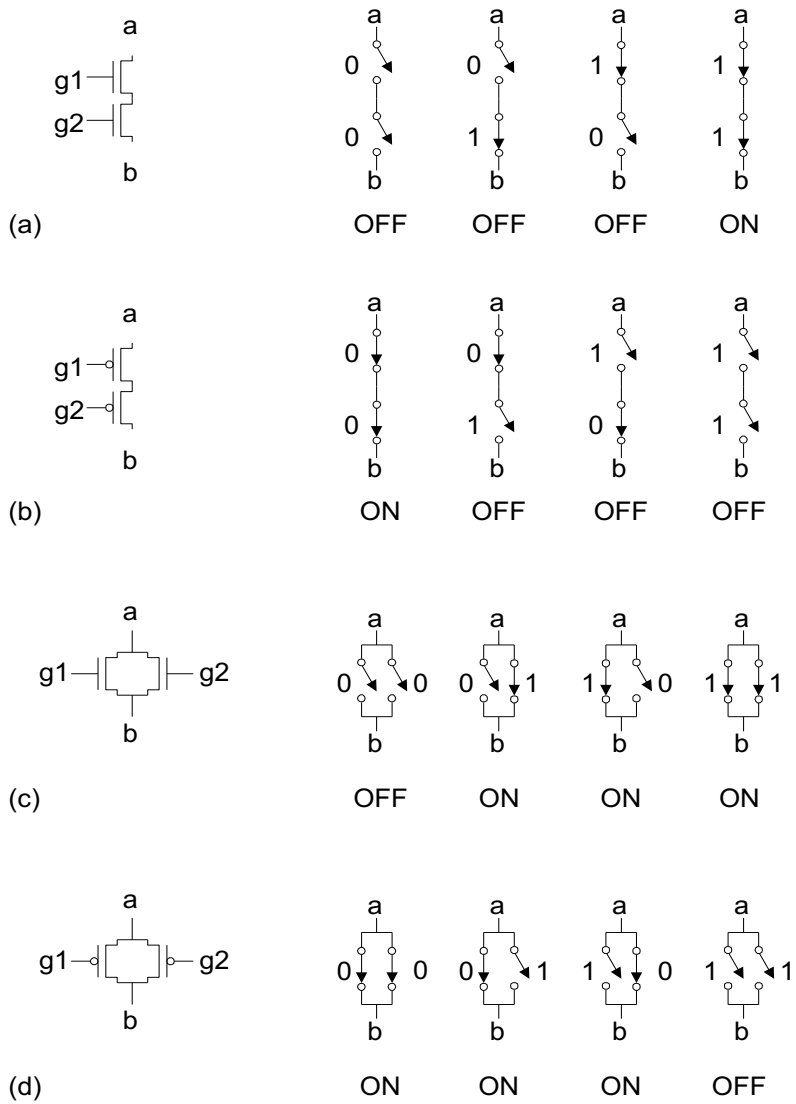

Conduction Complement

- **Complementary CMOS gates always produce 0 or 1**
- **Ex: NAND gate**
  - Series nMOS: Y=0 when both inputs are 1
  - Thus Y=1 when either input is 0
  - Requires parallel pMOS

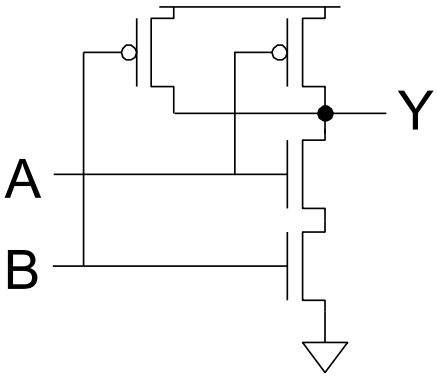

- **Rule of *Conduction Complements***
  - Pull-up network is complement of pull-down
  - Parallel -> series, series -> parallel

CMOS Inverter

A	Y
0	
1	

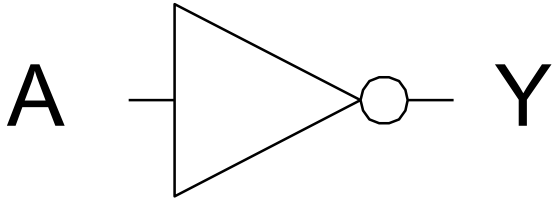

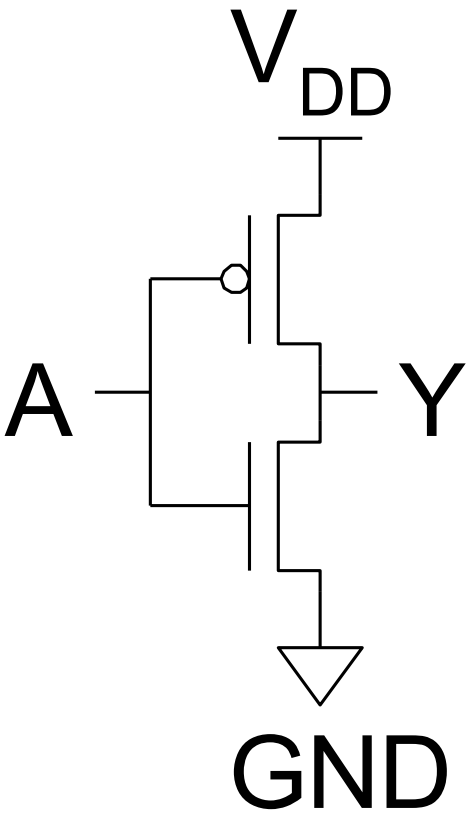

CMOS Inverter

A	Y
0	
1	**0**

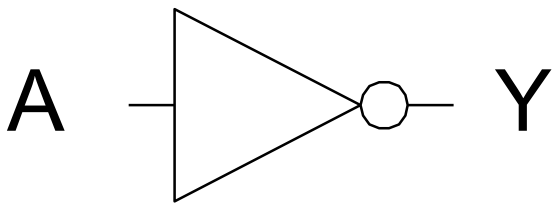

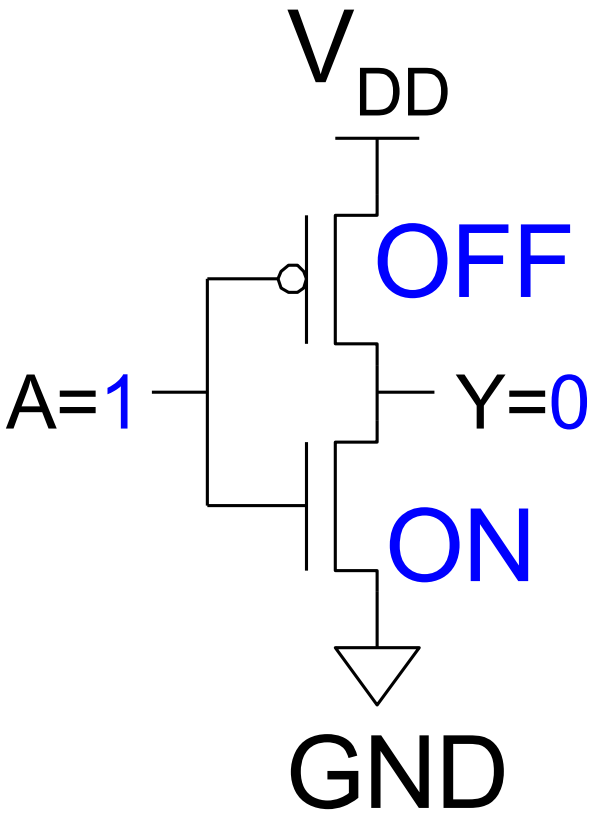

CMOS Inverter

A	Y
0	**1**
1	0

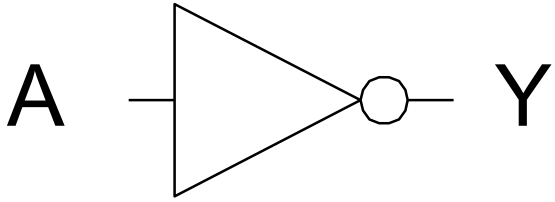

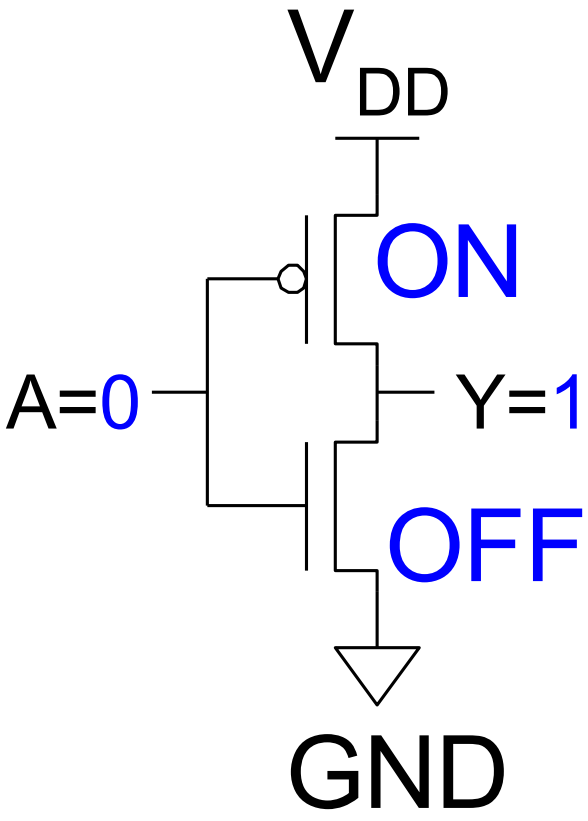

CMOS NAND Gate

A	B	Y
0	0	
0	1	
1	0	
1	1	

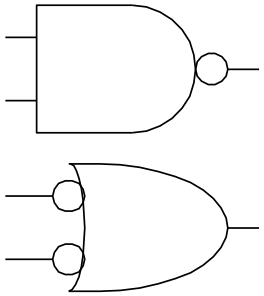

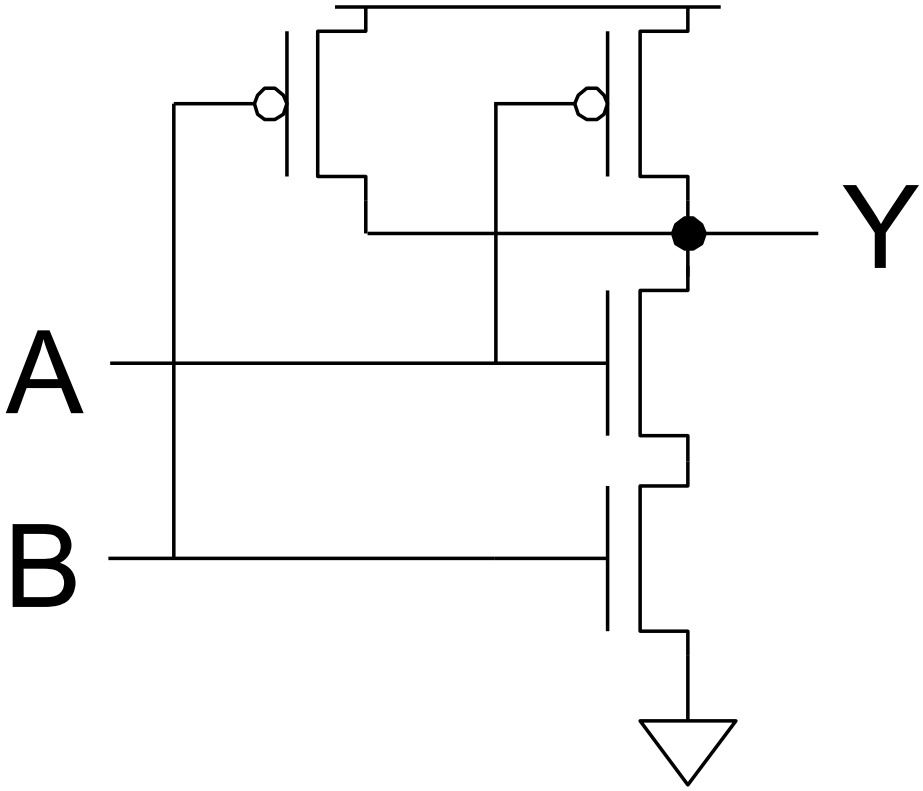

CMOS NAND Gate

A	B	Y
0	**0**	**1**
0	1	
1	0	
1	1	

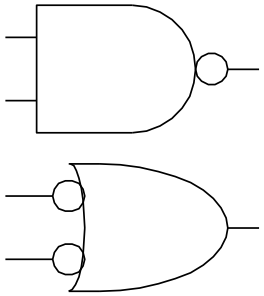

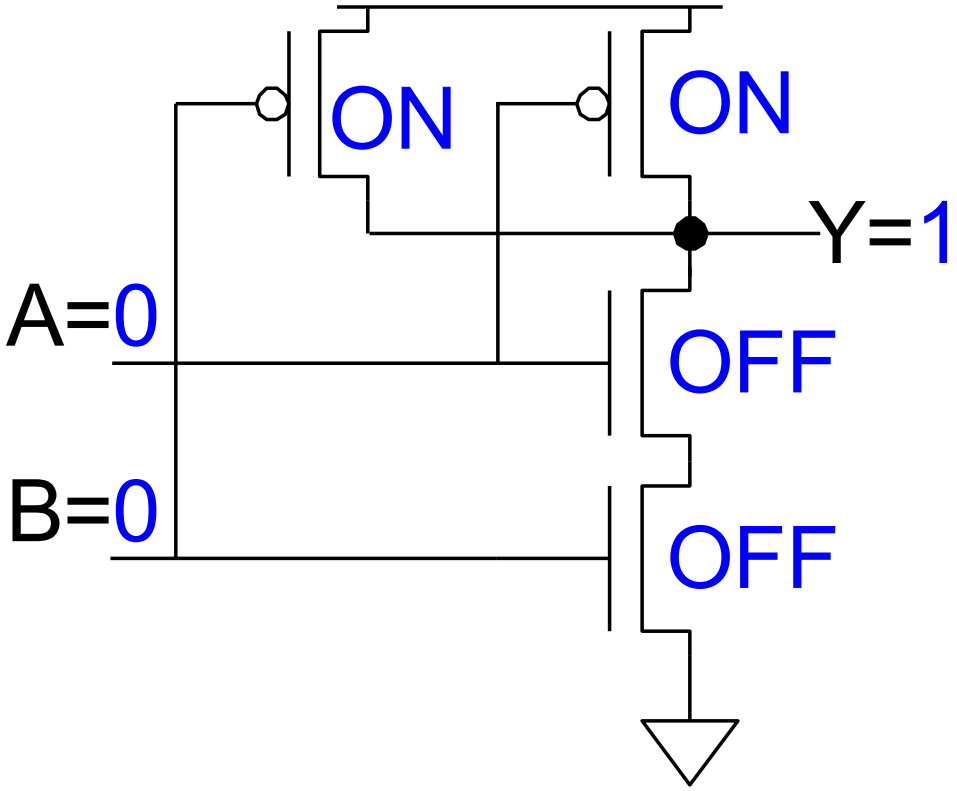

CMOS NAND Gate

A	B	Y
0	0	1
0	**1**	**1**
1	0	
1	1	

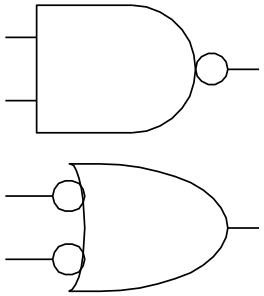

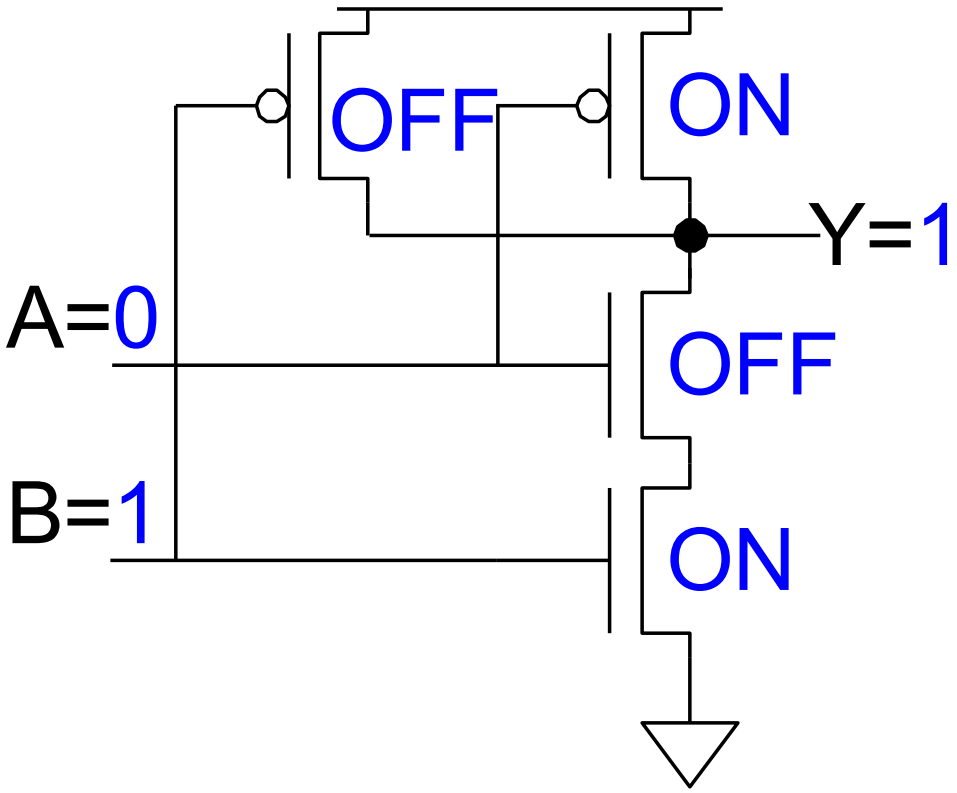

CMOS NAND Gate

A	B	Y
0	0	1
0	1	1
1	**0**	**1**
1	1	

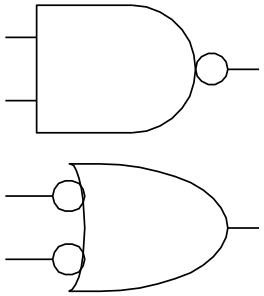

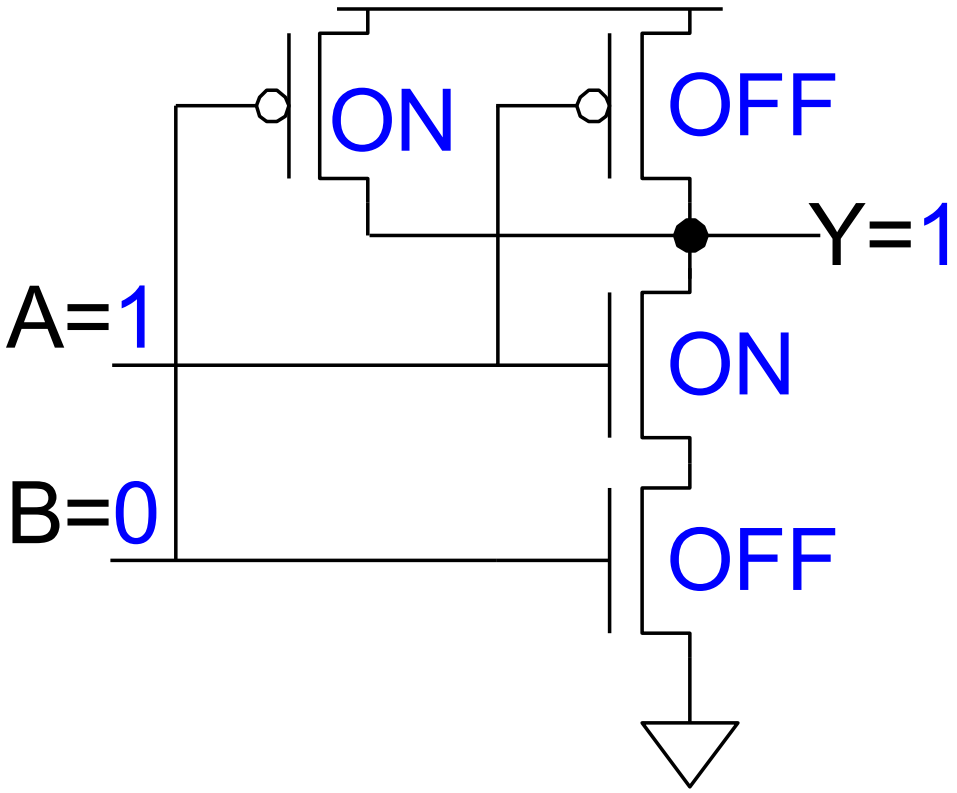

CMOS NAND Gate

A	B	Y
0	0	1
0	1	1
1	0	1
1	**1**	**0**

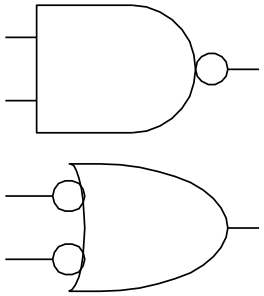

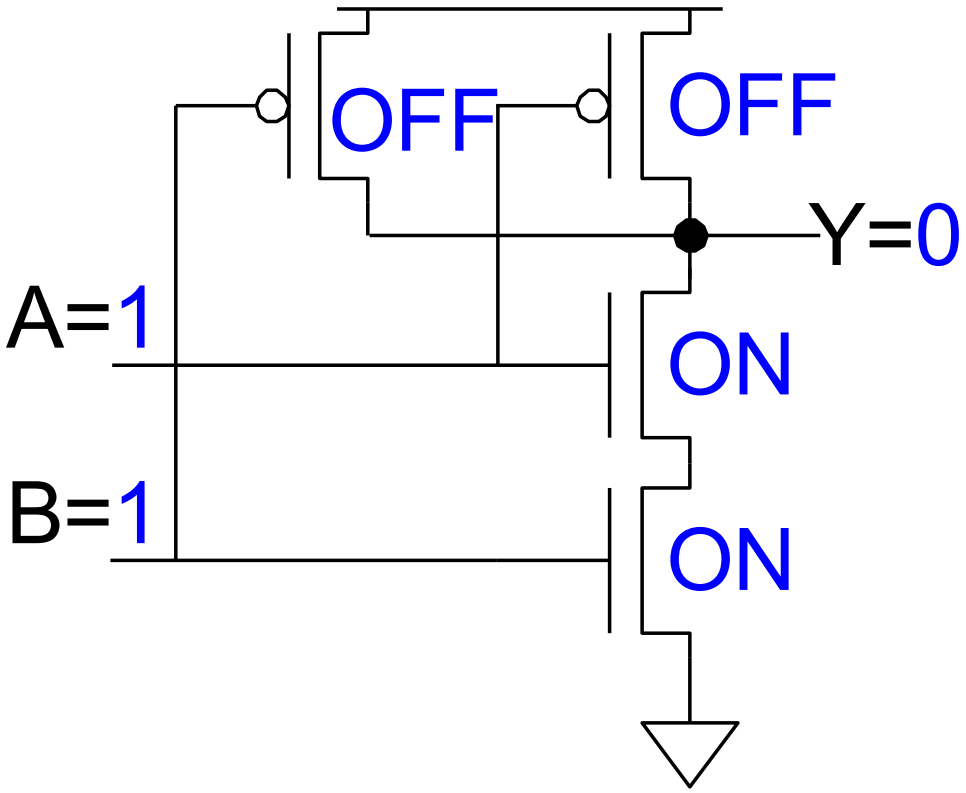

CMOS NOR Gate

A	B	Y
0	0	1
0	1	0
1	0	0
1	1	0

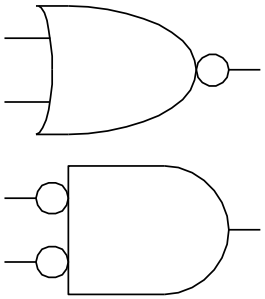

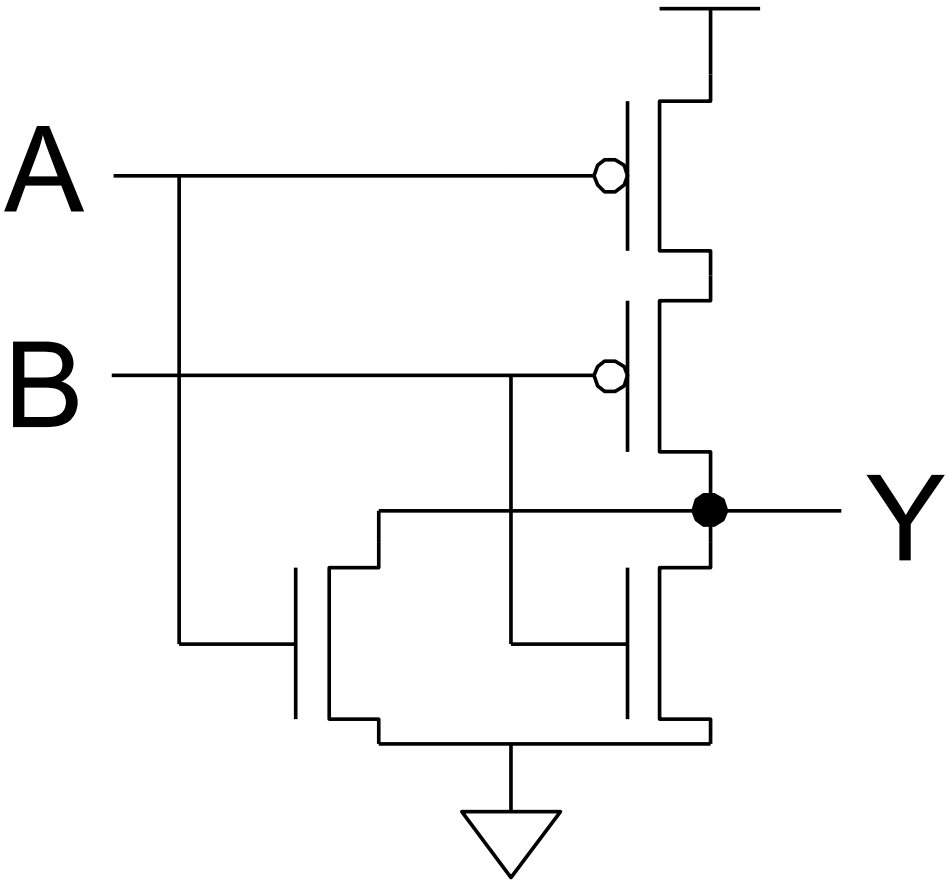

3-input NAND Gate

- Y pulls low if ALL inputs are 1
- Y pulls high if ANY input is 0

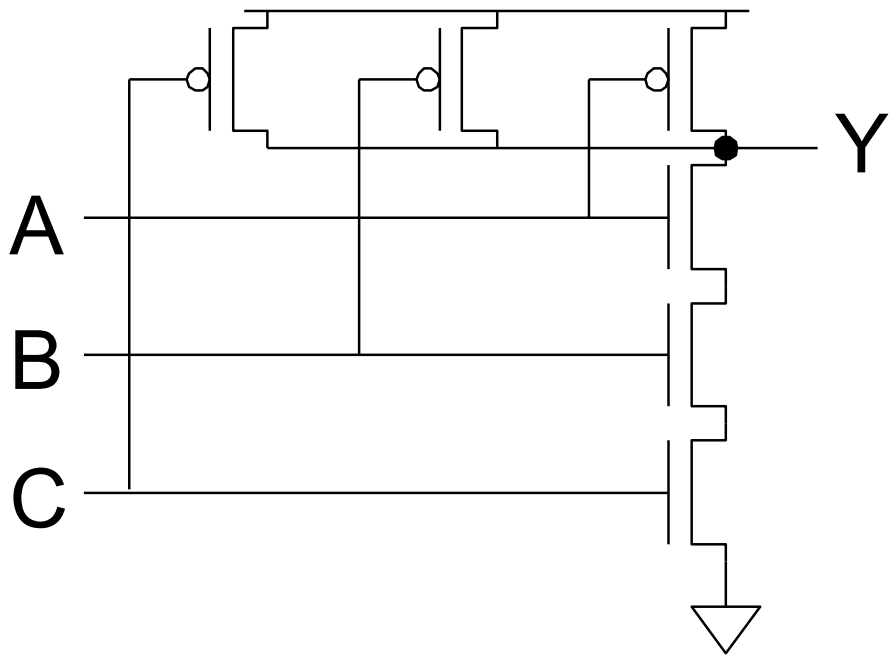

Example: O3AI

$$Y = \overline{(A + B + C) \bullet D}$$

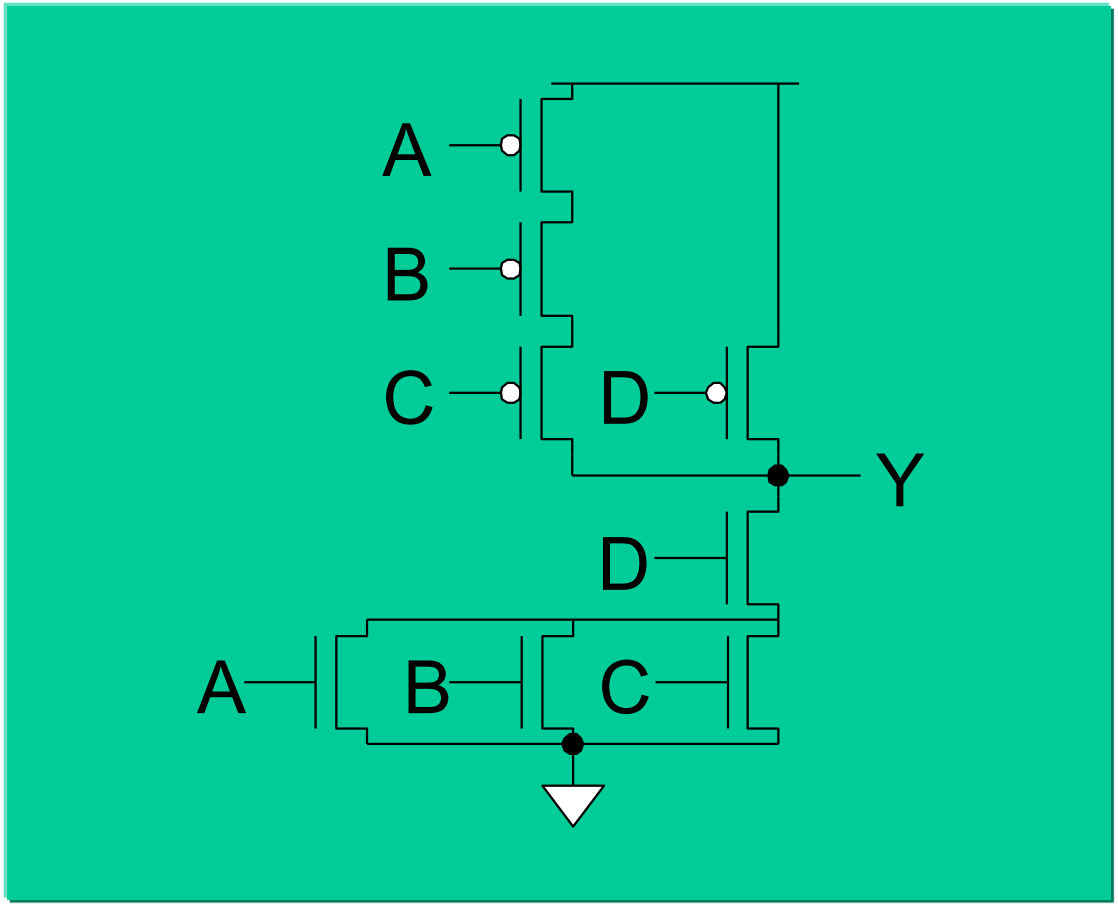

Gate Layout

- **Layout can be very time consuming**
  - Design gates to fit together nicely
  - Build a library of standard cells
- **Standard cell design methodology**
  - V_{DD} and GND should abut (standard height)
  - Adjacent gates should satisfy design rules
  - nMOS at bottom and pMOS at top
  - All gates include well and substrate contacts

Example: Inverter

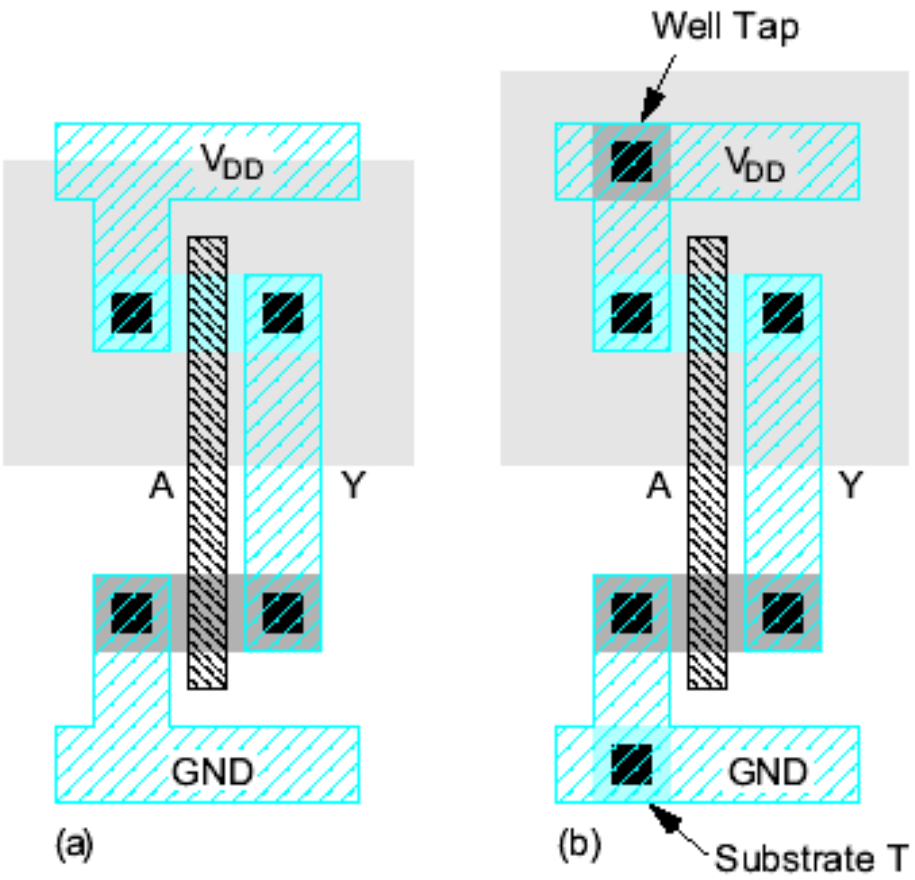

Example: NAND3

- Horizontal N-diffusion and P-diffusion strips
- Vertical polysilicon gates
- Metal1 V_{DD} rail at top
- Metal1 GND rail at bottom
- 32 λ by 40 λ

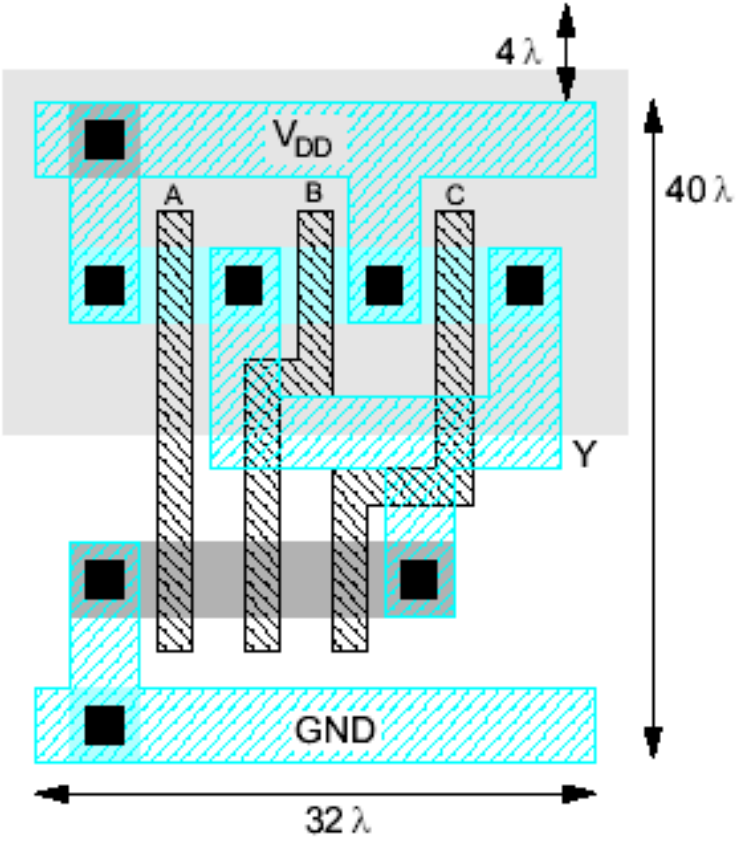

Stick Diagrams

- ***Stick diagrams* help plan layout quickly**
  - Need not be to scale
  - Draw with color pencils or dry-erase markers

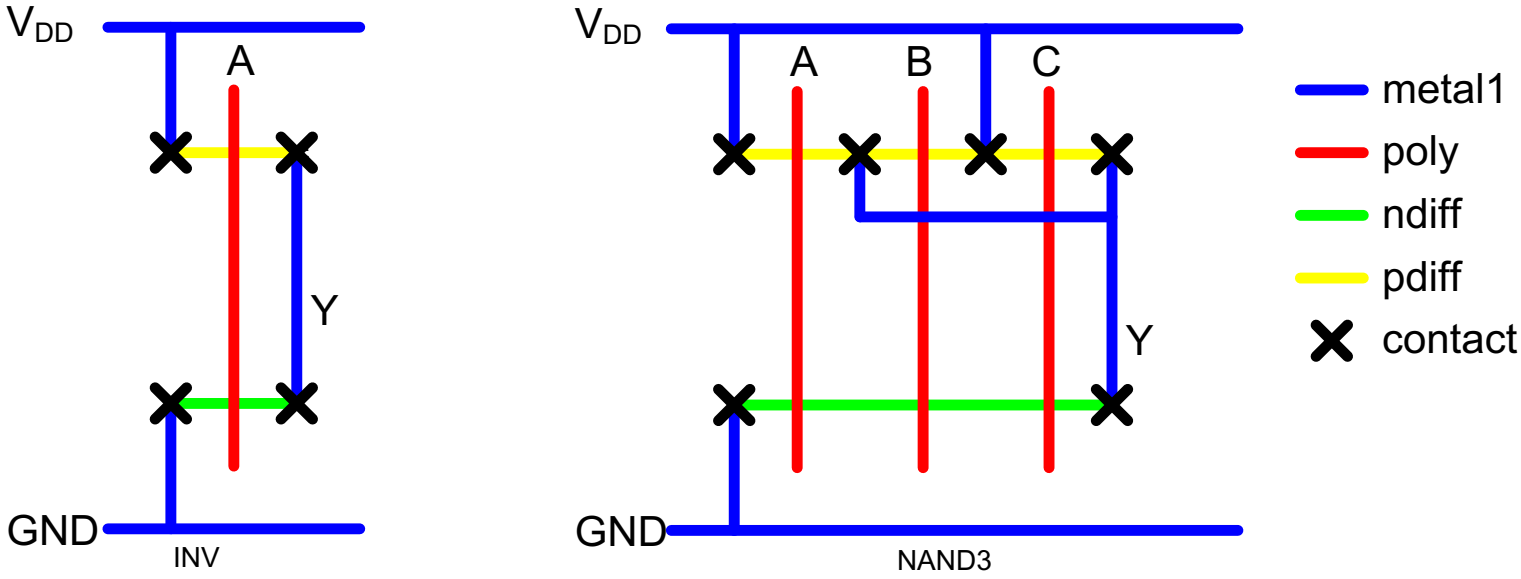

Wiring Tracks

- **A *wiring track* is the space required for a wire**
  - ► 4 λ width, 4 λ spacing from neighbor = 8 λ pitch
- **Transistors also consume one wiring track**

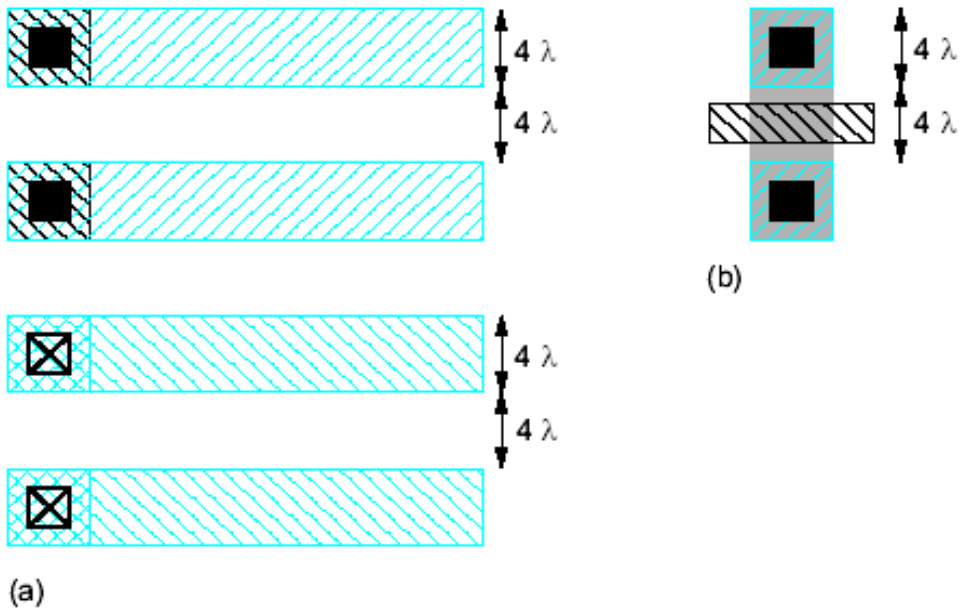

Well spacing

- **Wells must surround transistors by 6 λ**
  - Implies 12 λ between opposite transistor flavors
  - Leaves room for one wire track

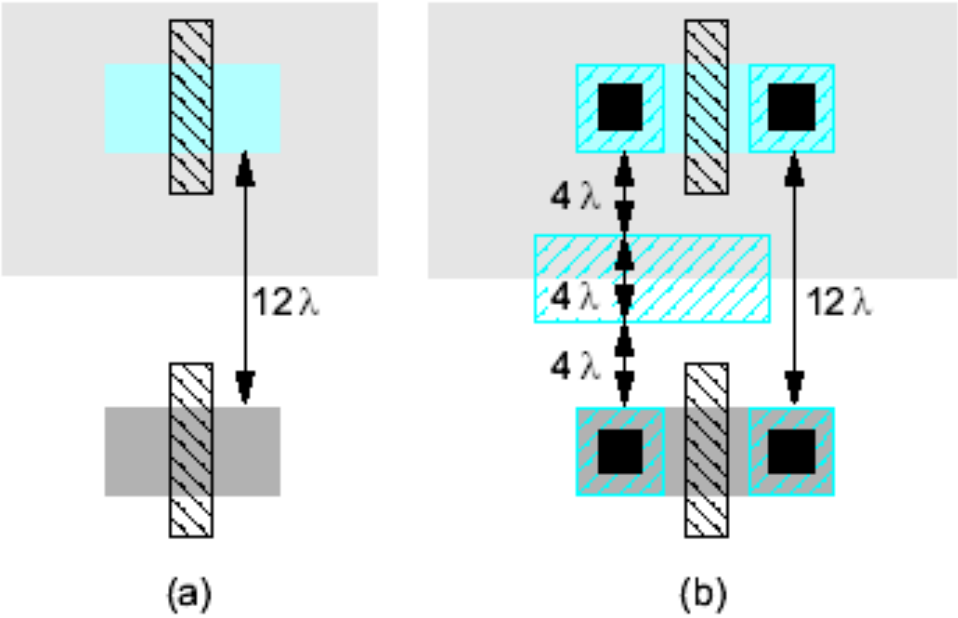

Area Estimation

- **Estimate area by counting wiring tracks**
  - Multiply by 8 to express in λ

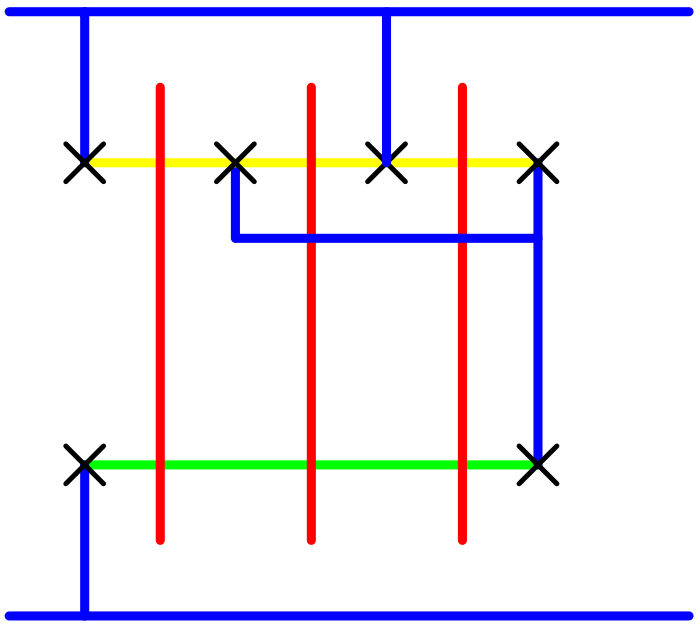

Area Estimation

- **Estimate area by counting wiring tracks**
  - Multiply by 8 to express in λ

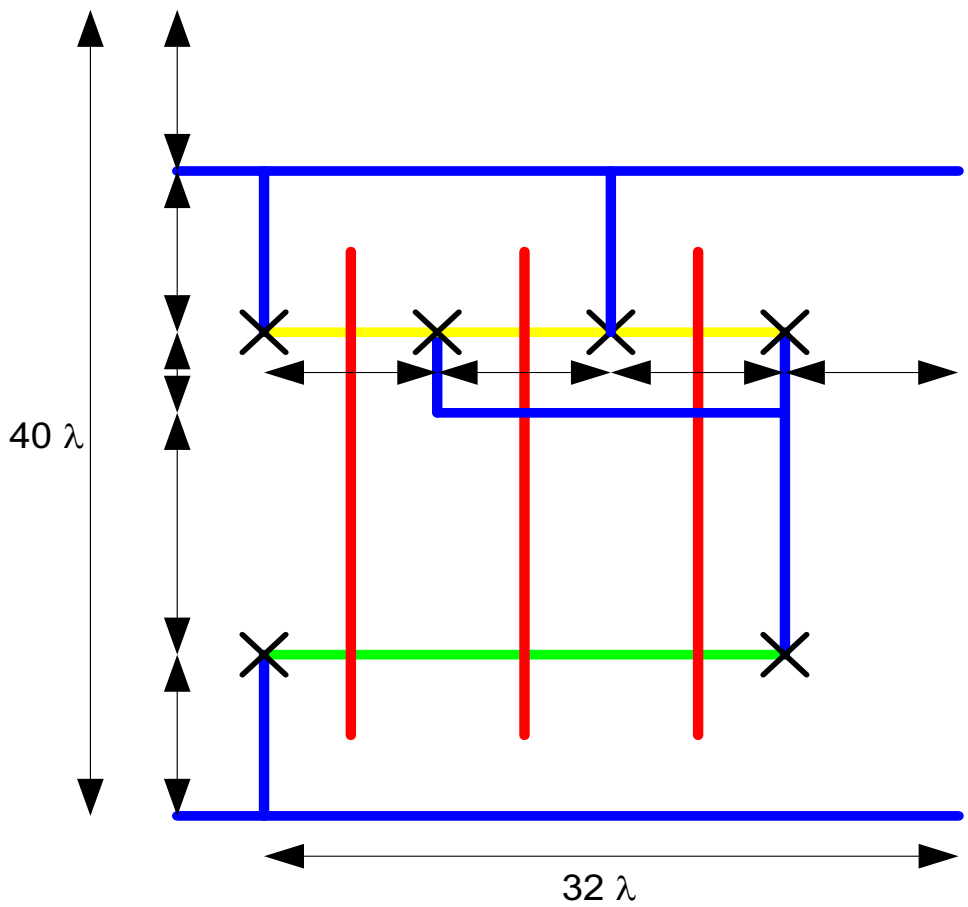

Example: O3AI
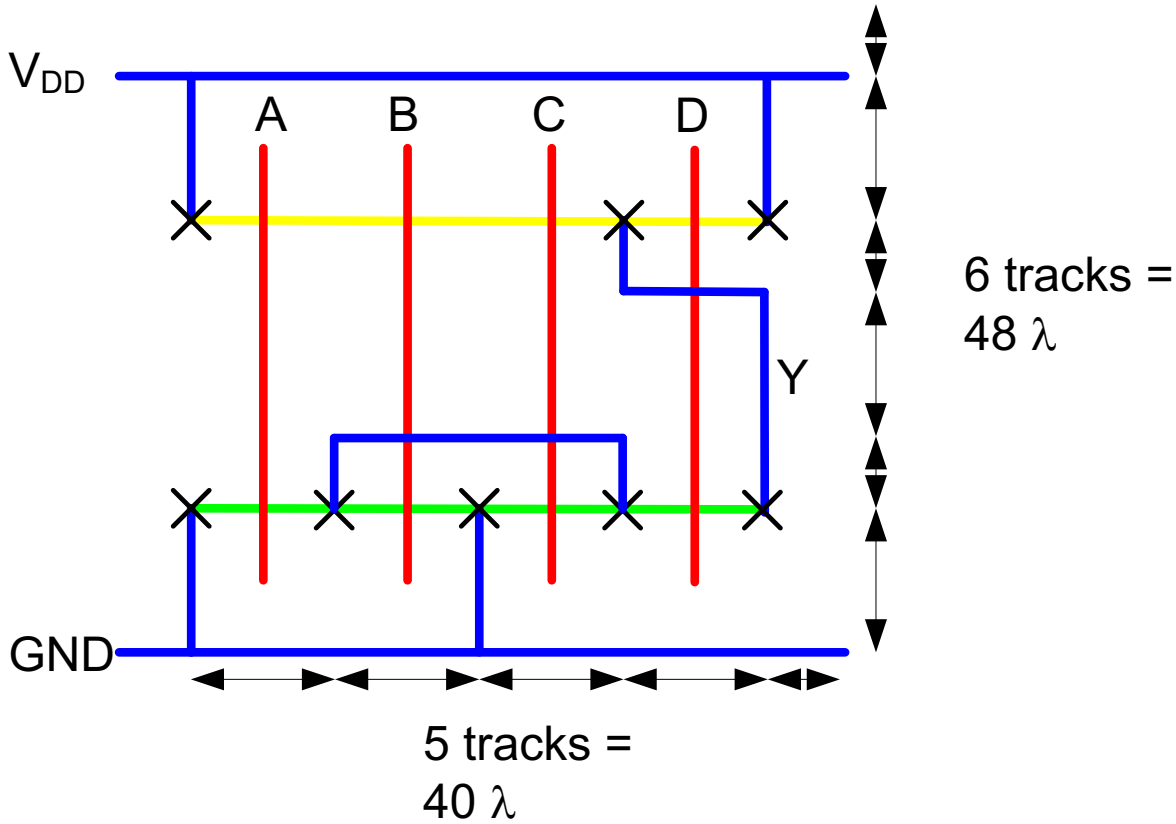
- **Sketch a stick diagram for O3AI and estimate area**
  - $Y = \overline{(A + B + C) \bullet D}$