Introduction to VLSI Design

Lecture 6

Power

Zhuo Feng

Outline

- **Power and Energy**
- **Dynamic Power**
- **Static Power**
- **Leakage Powers**

Power and Energy

- **Power is drawn from a voltage source attached to the V_{DD} pin(s) of a chip.**

- **Instantaneous Power:** $$P(t) = I(t)V(t)$$

- **Energy:** $$E = \int_0^T P(t)dt$$

- **Average Power:** $$P_{\text{avg}} = \frac{E}{T} = \frac{1}{T}\int_0^T P(t)dt$$

Power in Circuit Elements

$$P_{VDD}(t) = I_{DD}(t) V_{DD}$$

$$P_R(t) = \frac{V_R^2(t)}{R} = I_R^2(t) R$$

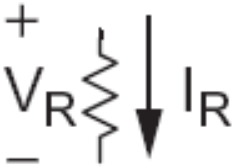

$$E_C = \int_0^\infty I(t) V(t)\, dt = \int_0^\infty C \frac{dV}{dt} V(t)\, dt$$

$$= C \int_0^{V_C} V(t)\, dV = \tfrac{1}{2} C V_C^2$$

Charging a Capacitor

- **When the gate output rises**
  - Energy stored in capacitor is

$$E_C = \tfrac{1}{2} C_L V_{DD}^2$$

  - But energy drawn from the supply is

$$E_{VDD} = \int_0^\infty I(t) V_{DD} dt = \int_0^\infty C_L \frac{dV}{dt} V_{DD} dt$$

$$= C_L V_{DD} \int_0^{V_{DD}} dV = C_L V_{DD}^2$$

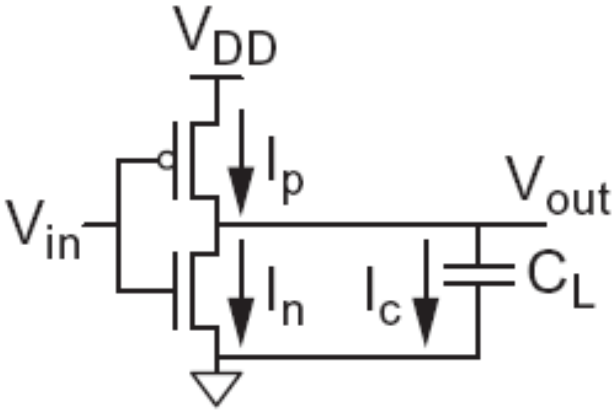

  - Half the energy from V_{DD} is dissipated in the pMOS transistor as heat, other half stored in capacitor
- **When the gate output falls**
  - Energy in capacitor is dumped to GND
  - Dissipated as heat in the nMOS transistor

Switching Waveforms

- **Example: V_{DD} = 1.0 V, C_L = 150 fF, f = 1 GHz**

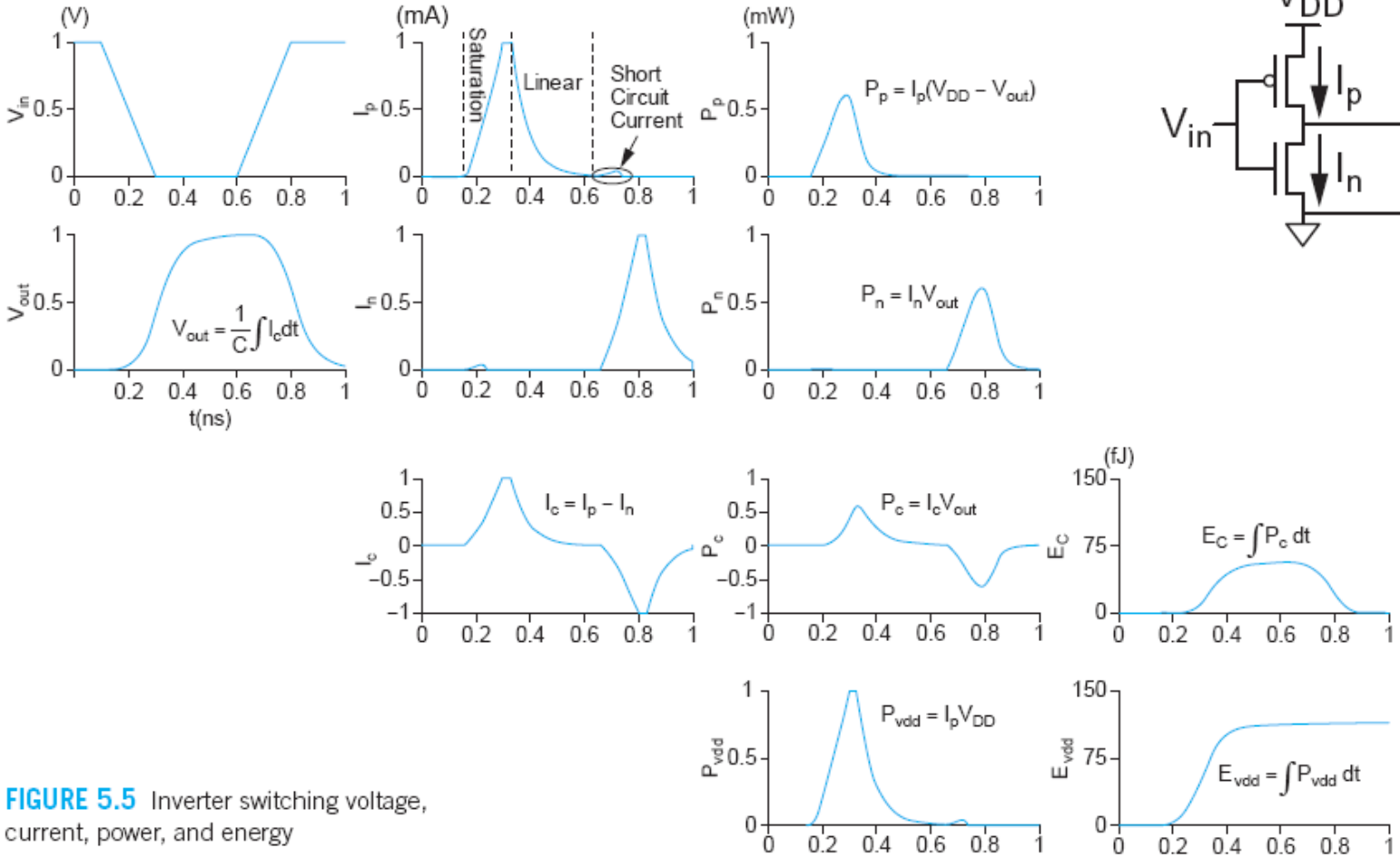

FIGURE 5.5 Inverter switching voltage, current, power, and energy

Switching Power

$$P_{\text{switching}} = \frac{1}{T}\int_0^T i_{DD}(t)V_{DD}\,dt$$

$$= \frac{V_{DD}}{T}\int_0^T i_{DD}(t)\,dt$$

$$= \frac{V_{DD}}{T}\left[T f_{\text{sw}} C V_{DD}\right]$$

$$= C V_{DD}^{\ 2} f_{\text{sw}}$$

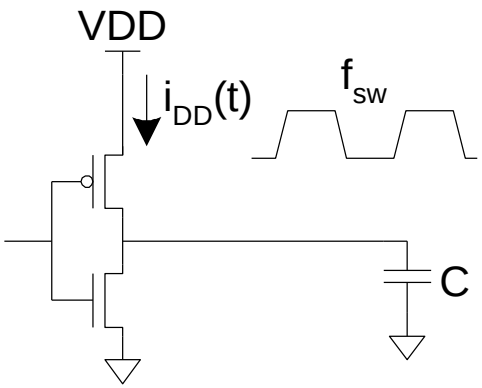

Activity Factor

- **Suppose the system clock frequency = f**
- **Let $f_{sw} = \alpha f$, where α = activity factor**
  - If the signal is a clock, $\alpha = 1$
  - If the signal switches once per cycle, $\alpha = ½$

- **Dynamic power:**

$$P_{\text{switching}} = \alpha C V_{DD}{}^2 f$$

Short Circuit Current

- **When transistors switch, both nMOS and pMOS networks may be momentarily ON at once**
- **Leads to a "short circuit" current.**
- **< 10% of dynamic power if rise/fall times are comparable for input and output**
- **We will generally ignore this component**

Power Dissipation Sources

- $P_{total} = P_{dynamic} + P_{static}$
- **Dynamic power:** $P_{dynamic} = P_{switching} + P_{shortcircuit}$
  - Switching load capacitances
  - Short-circuit current
- **Static power:** $P_{static} = (I_{sub} + I_{gate} + I_{junct} + I_{contention})V_{DD}$
  - Subthreshold leakage
  - Gate leakage
  - Junction leakage
  - Contention current

Dynamic Power Example

- **1 billion transistor chip**
  - 50M logic transistors
    - Average width: 12 λ
    - Activity factor = 0.1
  - 950M memory transistors
    - Average width: 4 λ
    - Activity factor = 0.02
  - 1.0 V 65 nm process
  - C = 1 fF/μm (gate) + 0.8 fF/μm (diffusion)

- **Estimate dynamic power consumption @ 1 GHz. Neglect wire capacitance and short-circuit current.**

Solution

$$C_{\text{logic}} = \left(50\times10^{6}\right)\left(12\lambda\right)\left(0.025\mu m/\lambda\right)\left(1.8\,fF/\mu m\right) = 27\ \text{nF}$$

$$C_{\text{mem}} = \left(950\times10^{6}\right)\left(4\lambda\right)\left(0.025\mu m/\lambda\right)\left(1.8\,fF/\mu m\right) = 171\ \text{nF}$$

$$P_{\text{dynamic}} = \left[0.1C_{\text{logic}} + 0.02C_{\text{mem}}\right]\left(1.0\right)^{2}\left(1.0\ \text{GHz}\right) = 6.1\ \text{W}$$

Dynamic Power Reduction

- $P_{\text{switching}} = \alpha C V_{DD}{}^2 f$

- **Try to minimize:**
  - Activity factor
  - Capacitance
  - Supply voltage
  - Frequency

Activity Factor Estimation

- **Let P_i = Prob(node i = 1)**
  - $\overline{P}_i = 1 - P_i$
- **$\alpha_i = \overline{P}_i * P_i$**
- **Completely random data has P = 0.5 and α = 0.25**
- **Data is often not completely random**
  - e.g. upper bits of 64-bit words representing bank account balances are usually 0
- **Data propagating through ANDs and ORs has lower activity factor**
  - Depends on design, but typically $\alpha \approx 0.1$

Switching Probability

Gate	P_Y
AND2	$P_A P_B$
AND3	$P_A P_B P_C$
OR2	$1 - \overline{P}_A \overline{P}_B$
NAND2	$1 - P_A P_B$
NOR2	$\overline{P}_A \overline{P}_B$
XOR2	$P_A \overline{P}_B + \overline{P}_A P_B$

Example

- **A 4-input AND is built out of two levels of gates**
- **Estimate the activity factor at each node if the inputs have P = 0.5**

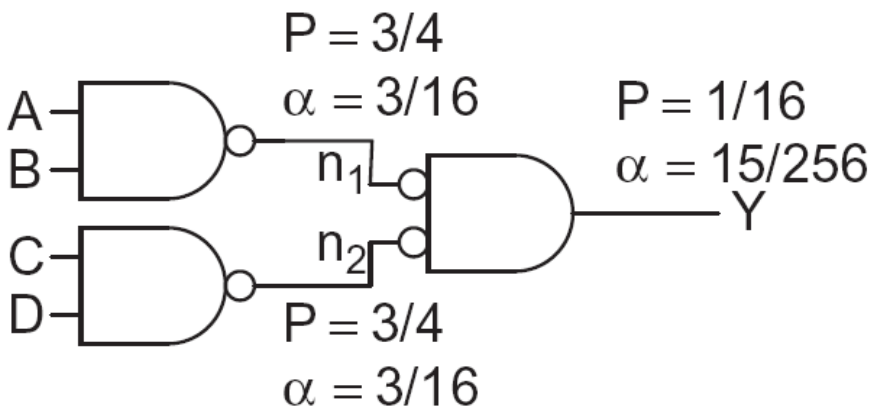

Clock Gating

- **The best way to reduce the activity is to turn off the clock to registers in unused blocks**
  - Saves clock activity (α = 1)
  - Eliminates all switching activity in the block
  - Requires determining if block will be used

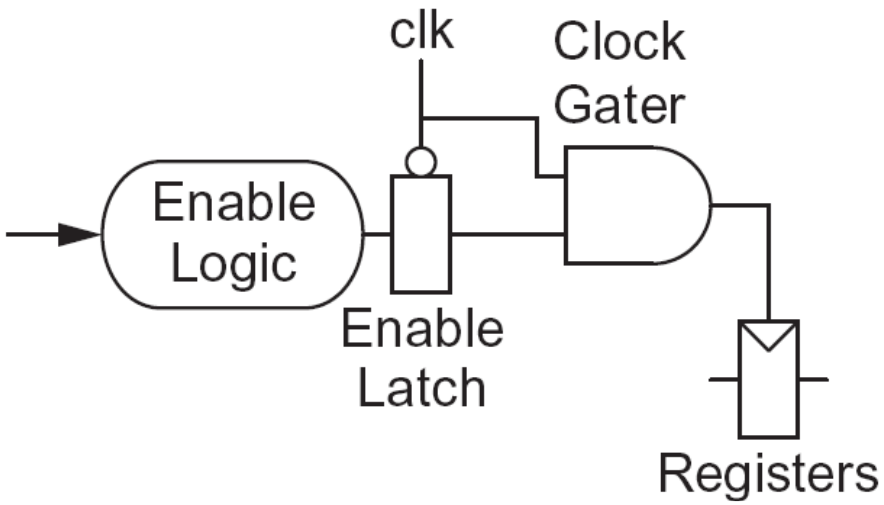

Capacitance

- **Gate capacitance**
  - Fewer stages of logic
  - Small gate sizes
- **Wire capacitance**
  - Good floorplanning to keep communicating blocks close to each other
  - Drive long wires with inverters or buffers rather than complex gates

Voltage / Frequency

- **Run each block at the lowest possible voltage and frequency that meets performance requirements**

- **Voltage Domains**
  - Provide separate supplies to different blocks
  - Level converters required when crossing from low to high V_{DD} domains

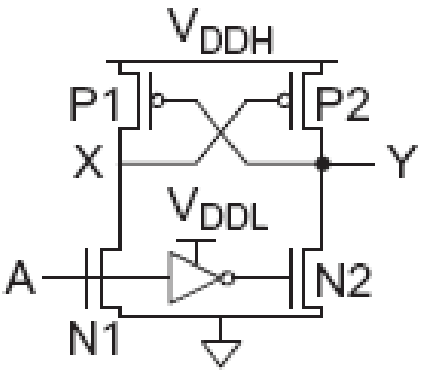

- **Dynamic Voltage Scaling**
  - Adjust V_{DD} and f according to workload

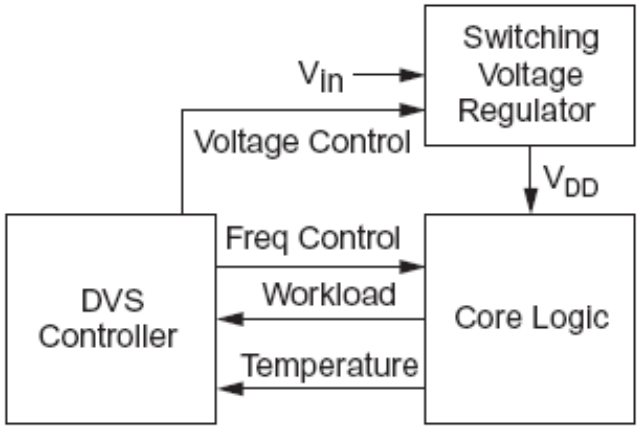

Static Power

- **Static power is consumed even when chip is quiescent.**
  - Leakage draws power from nominally OFF devices
  - Ratioed circuits burn power in fight between ON transistors

Static Power Example

- **Revisit power estimation for 1 billion transistor chip**
- **Estimate static power consumption**
  - Subthreshold leakage
    - Normal V_t: 100 nA/μm
    - High V_t: 10 nA/μm
    - High Vt used in all memories and in 95% of logic gates
  - Gate leakage 5 nA/μm
  - Junction leakage negligible

Solution

$$W_{\text{normal-V}_t} = \left(50\times10^6\right)\left(12\lambda\right)\left(0.025\mu\text{m}/\lambda\right)\left(0.05\right) = 0.75\times10^6\ \mu\text{m}$$

$$W_{\text{high-V}_t} = \left[\left(50\times10^6\right)\left(12\lambda\right)\left(0.95\right)+\left(950\times10^6\right)\left(4\lambda\right)\right]\left(0.025\mu\text{m}/\lambda\right) = 109.25\times10^6\ \mu\text{m}$$

$$I_{sub} = \left[W_{\text{normal-V}_t}\times100\ \text{nA}/\mu\text{m}+W_{\text{high-V}_t}\times10\ \text{nA}/\mu\text{m}\right]/2 = 584\ \text{mA}$$

$$I_{gate} = \left[\left(W_{\text{normal-V}_t}+W_{\text{high-V}_t}\right)\times5\ \text{nA}/\mu\text{m}\right]/2 = 275\ \text{mA}$$

$$\text{P}_{static} = \left(584\ \text{mA}+275\ \text{mA}\right)\left(1.0\ \text{V}\right) = 859\ \text{mW}$$

Subthreshold Leakage

- **For V_{ds} > 50 mV**

$$I_{sub} \approx I_{off} 10^{\frac{V_{gs} + \eta(V_{ds} - V_{DD}) - k_\gamma V_{sb}}{S}}$$

- **I_{off} = leakage at V_{gs} = 0, V_{ds} = V_{DD}**

Typical values in 65 nm
I_{off} = 100 nA/μm @ V_t = 0.3 V
I_{off} = 10 nA/μm @ V_t = 0.4 V
I_{off} = 1 nA/μm @ V_t = 0.5 V
η = 0.1
k_γ = 0.1
S = 100 mV/decade

Stack Effect

- **Series OFF transistors have less leakage**
  - $V_x > 0$, so N2 has negative V_{gs}

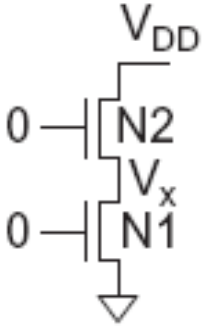

$$I_{sub} = \underbrace{I_{off} 10^{\frac{\eta(V_x - V_{DD})}{S}}}_{N2} = \underbrace{I_{off} 10^{\frac{-V_x + \eta((V_{DD} - V_x) - V_{DD}) - k_\gamma V_x}{S}}}_{N1}$$

$$V_x = \frac{\eta V_{DD}}{1 + 2\eta + k_\gamma}$$

$$I_{sub} = I_{off} 10^{\frac{-\eta V_{DD}\left(\frac{1+\eta+k_\gamma}{1+2\eta+k_\gamma}\right)}{S}} \approx I_{off} 10^{\frac{-\eta V_{DD}}{S}}$$

  - Leakage through 2-stack reduces ~10x
  - Leakage through 3-stack reduces further

Leakage Control

- **Leakage and delay trade off**
  - Aim for low leakage in sleep and low delay in active mode
- **To reduce leakage:**
  - Increase V_t: *multiple V_t*
    - Use low V_t only in critical circuits
  - Increase V_s: *stack effect*
    - *Input vector control* in sleep
  - Decrease V_b
    - *Reverse body bias* in sleep
    - Or forward body bias in active mode

Gate Leakage

- **Extremely strong function of t_{ox} and V_{gs}**
  - Negligible for older processes
  - Approaches subthreshold leakage at 65 nm and below in some processes
- **An order of magnitude less for pMOS than nMOS**
- **Control leakage in the process using t_{ox} > 10.5 Å**
  - High-k gate dielectrics help
  - Some processes provide multiple t_{ox}
    - e.g. thicker oxide for 3.3 V I/O transistors
- **Control leakage in circuits by limiting V_{DD}**

NAND3 Leakage Example

- **100 nm process**

  I_{gn} = 6.3 nA I_{gp} = 0

  I_{offn} = 5.63 nA I_{offp} = 9.3 nA

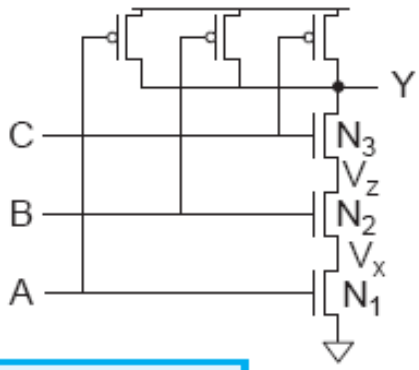

Input State (ABC)	I_{sub}	I_{gate}	I_{total}	V_x	V_z
000	0.4	0	0.4	stack effect	stack effect
001	0.7	0	0.7	stack effect	$V_{DD} - V_t$
010	0	1.3	1.3	intermediate	intermediate
011	3.8	0	10.1	$V_{DD} - V_t$	$V_{DD} - V_t$
100	0.7	6.3	7.0	0	stack effect
101	3.8	6.3	10.1	0	$V_{DD} - V_t$
110	5.6	12.6	18.2	0	0
111	28	18.9	46.9	0	0

Data from [Lee03]

Junction Leakage

- **From reverse-biased p-n junctions**
  - Between diffusion and substrate or well
- **Ordinary diode leakage is negligible**
- **Band-to-band tunneling (BTBT) can be significant**
  - Especially in high-V_t transistors where other leakage is small
  - Worst at $V_{db} = V_{DD}$
- **Gate-induced drain leakage (GIDL) exacerbates**
  - Worst for $V_{gd} = -V_{DD}$ (or more negative)

Power Gating

- **Turn OFF power to blocks when they are idle to save leakage**
  - Use virtual V_{DD} (V_{DDV})
  - Gate outputs to prevent invalid logic levels to next block

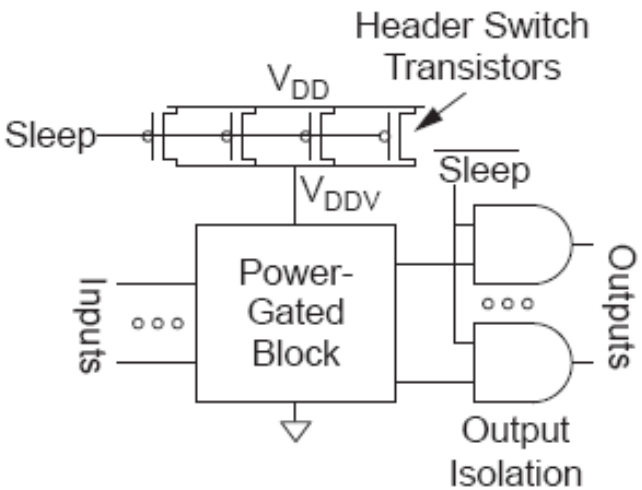

- **Voltage drop across sleep transistor degrades performance during normal operation**
  - Size the transistor wide enough to minimize impact
- **Switching wide sleep transistor costs dynamic power**
  - Only justified when circuit sleeps long enough