Introduction to VLSI Design

Lecture 8 Spice Simulation

Zhuo Feng

Outline

- Introduction to SPICE
- DC Analysis
- Transient Analysis
- Subcircuits
- Power Measurement
- SPICE simulation methods

Introduction to SPICE

- **Simulation Program with Integrated Circuit Emphasis**
  - Developed in 1970's at Berkeley
  - Many commercial versions are available
  - HSPICE is a robust industry standard
    - Has many enhancements that we will use
- **Written in FORTRAN for punch-card machines**
  - Circuits elements are called *cards*
  - Complete description is called a SPICE *deck*

Writing Spice Decks

- **Writing a SPICE deck is like writing a good program**
  - Plan: sketch schematic on paper or in editor
    - Modify existing decks whenever possible
  - Code: strive for clarity
    - Start with name, email, date, purpose
    - Generously comment
  - Test:
    - Predict what results should be
    - Compare with actual
    - *Garbage In, Garbage Out!*

Example: RC Circuit

```
* rc.sp
* David_Harris@hmc.edu 2/2/03
* Find the response of RC circuit to rising input
*-----------------------------------------------
* Parameters and models
*-----------------------------------------------
.option post

*-----------------------------------------------
* Simulation netlist
*-----------------------------------------------
Vin      in       gnd      pwl      0ps 0 100ps 0 150ps 1.8 800ps 1.8
R1       in       out      2k
C1       out      gnd      100f

*-----------------------------------------------
* Stimulus
*-----------------------------------------------
.tran 20ps 800ps
.plot v(in) v(out)
.end
```

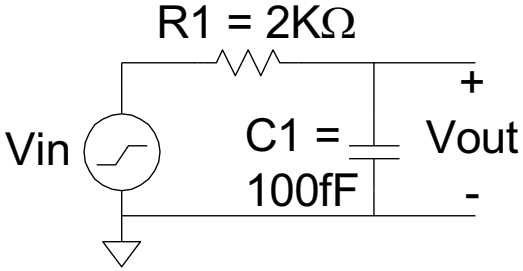

Result (Textual)

```
legend:
  a: v(in)
  b: v(out)

      time        v(in)
 (ab      )        0.          500.0000m       1.0000        1.5000       2.0000
                     +             +             +             +             +
    0.          0.    -2------+------+------+------+------+------+------+------+-
   20.0000p     0.     2      +      +      +      +      +      +      +      +
   40.0000p     0.     2      +      +      +      +      +      +      +      +
   60.0000p     0.     2      +      +      +      +      +      +      +      +
   80.0000p     0.     2      +      +      +      +      +      +      +      +
  100.0000p     0.     2      +      +      +      +      +      +      +      +
  120.0000p  720.000m +b     +      +     a+      +      +      +      +      +
  140.0000p    1.440  +   b  +      +      +      +      +    a +      +      +
  160.0000p    1.800  +      +b     +      +      +      +      +      +a     +
  180.0000p    1.800  +      +    b +      +      +      +      +      +a     +
  200.0000p    1.800 -+------+------+b-----+------+------+------+------+a-----+-
  220.0000p    1.800  +      +      +    b +      +      +      +      +a     +
  240.0000p    1.800  +      +      +      +b     +      +      +      +a     +
  260.0000p    1.800  +      +      +      +   b  +      +      +      +a     +
  280.0000p    1.800  +      +      +      +     b+      +      +      +a     +
  300.0000p    1.800  +      +      +      +      +b     +      +      +a     +
  320.0000p    1.800  +      +      +      +      +  b   +      +      +a     +
  340.0000p    1.800  +      +      +      +      +    b +      +      +a     +
  360.0000p    1.800  +      +      +      +      +      b      +      +a     +
  380.0000p    1.800  +      +      +      +      +      +b     +      +a     +
  400.0000p    1.800 -+------+------+------+------+------+--b---+------+a-----+-
  420.0000p    1.800  +      +      +      +      +      +   b  +      +a     +
  440.0000p    1.800  +      +      +      +      +      +    b +      +a     +
  460.0000p    1.800  +      +      +      +      +      +     b+      +a     +
  480.0000p    1.800  +      +      +      +      +      +      b      +a     +
  500.0000p    1.800  +      +      +      +      +      +      +b     +a     +
  520.0000p    1.800  +      +      +      +      +      +      +b     +a     +
  540.0000p    1.800  +      +      +      +      +      +      + b    +a     +
  560.0000p    1.800  +      +      +      +      +      +      +  b   +a     +
  580.0000p    1.800  +      +      +      +      +      +      +  b   +a     +
  600.0000p    1.800 -+------+------+------+------+------+------+---b--+a-----+-
  620.0000p    1.800  +      +      +      +      +      +      +   b  +a     +
  640.0000p    1.800  +      +      +      +      +      +      +    b +a     +
  660.0000p    1.800  +      +      +      +      +      +      +    b +a     +
  680.0000p    1.800  +      +      +      +      +      +      +    b +a     +
  700.0000p    1.800  +      +      +      +      +      +      +     b+a     +
  720.0000p    1.800  +      +      +      +      +      +      +     b+a     +
  740.0000p    1.800  +      +      +      +      +      +      +     b+a     +
  760.0000p    1.800  +      +      +      +      +      +      +     b+a     +
  780.0000p    1.800  +      +      +      +      +      +      +      ba     +
  800.0000p    1.800 -+------+------+------+------+------+------+------ba-----+-
                     +             +             +             +             +
```

Result (Graphical)

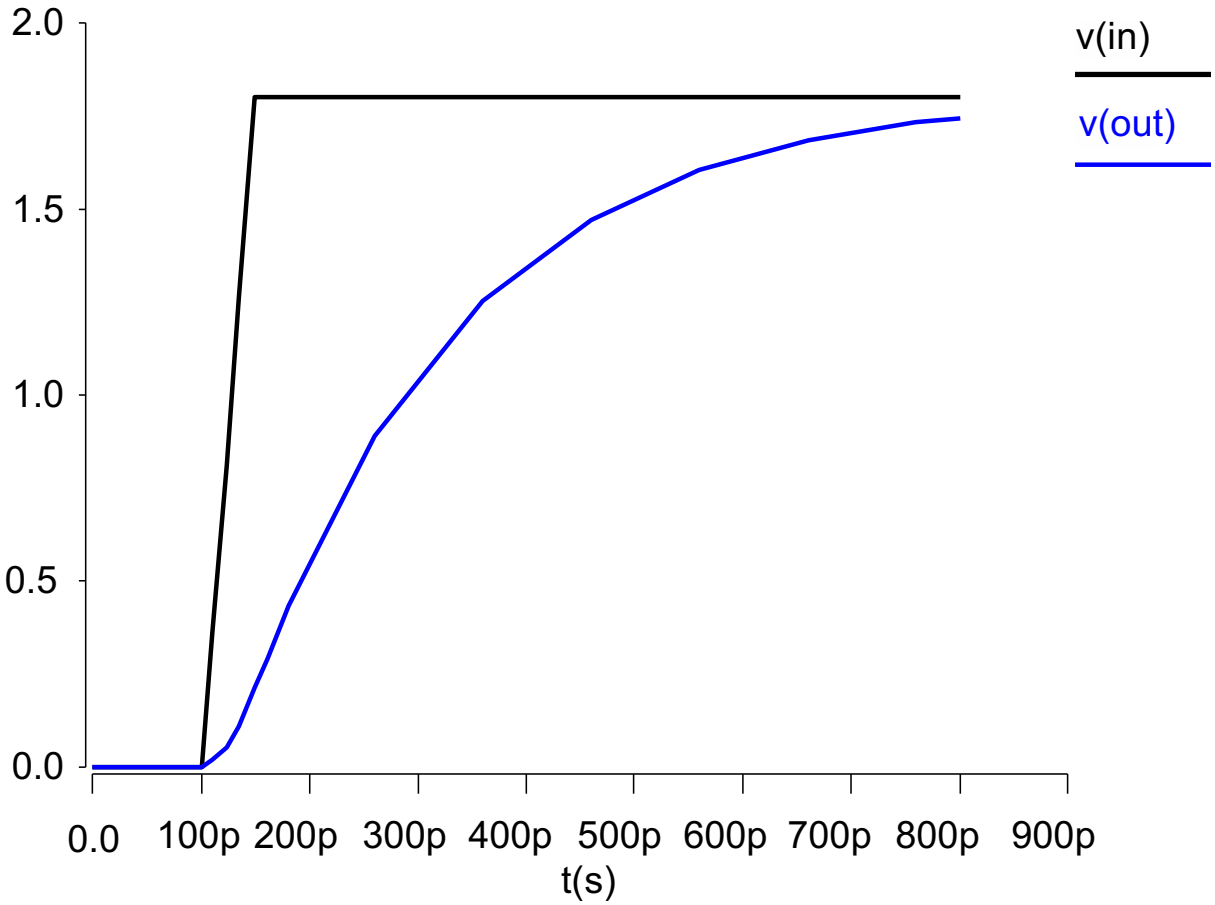

Sources

- ***DC* Source**

```
Vdd vdd gnd 2.5
```

- ***Piecewise Linear* Source**

```
Vin in gnd pwl 0ps 0 100ps 0 150ps 1.8 800ps 1.8
```

- ***Pulsed* Source**

```
Vck clk gnd PULSE 0 1.8 0ps 100ps 100ps 300ps 800ps
```

PULSE v1 v2 td tr tf pw per

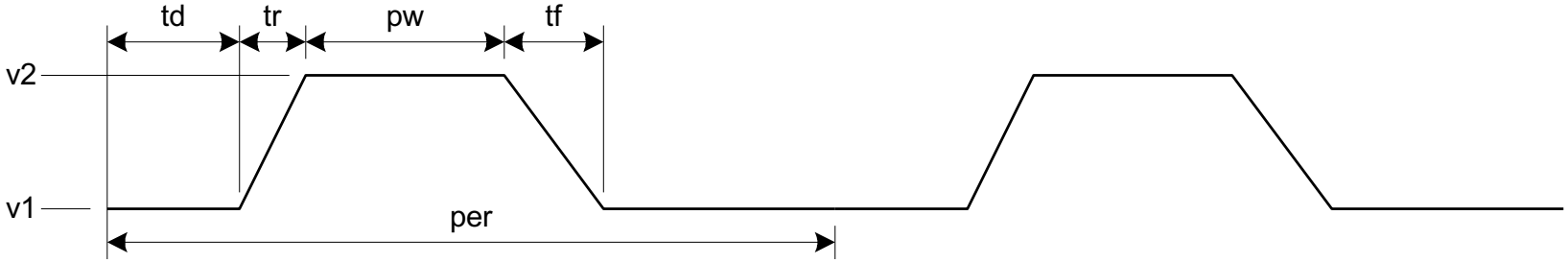

SPICE Elements

Letter	Element
R	Resistor
C	Capacitor
L	Inductor
K	Mutual Inductor
V	Independent voltage source
I	Independent current source
M	MOSFET
D	Diode
Q	Bipolar transistor
W	Lossy transmission line
X	Subcircuit
E	Voltage-controlled voltage source
G	Voltage-controlled current source
H	Current-controlled voltage source
F	Current-controlled current source

Units

Letter	Unit	Magnitude
a	atto	10^{-18}
f	fempto	10^{-15}
p	pico	10^{-12}
n	nano	10^{-9}
u	micro	10^{-6}
m	mili	10^{-3}
k	kilo	10^{3}
x	mega	10^{6}
g	giga	10^{9}

Ex: 100 femptofarad capacitor = 100fF, 100f, 100e-15

DC Analysis

```
* mosiv.sp

*-----------------------------------------------
* Parameters and models
*-----------------------------------------------
.include '../models/tsmc180/models.sp'
.temp 70
.option post

*-----------------------------------------------
* Simulation netlist
*-----------------------------------------------
*nmos
Vgs      g        gnd      0
Vds      d        gnd      0
M1       d        g        gnd      gnd      NMOS     W=0.36u  L=0.18u

*-----------------------------------------------
* Stimulus
*-----------------------------------------------
.dc Vds 0 1.8 0.05 SWEEP Vgs 0 1.8 0.3
.end
```

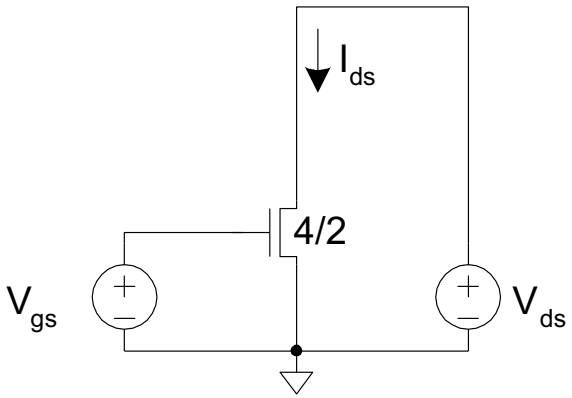

I-V Characteristics

NMOS I-V

- V_{gs} dependence
- Saturation

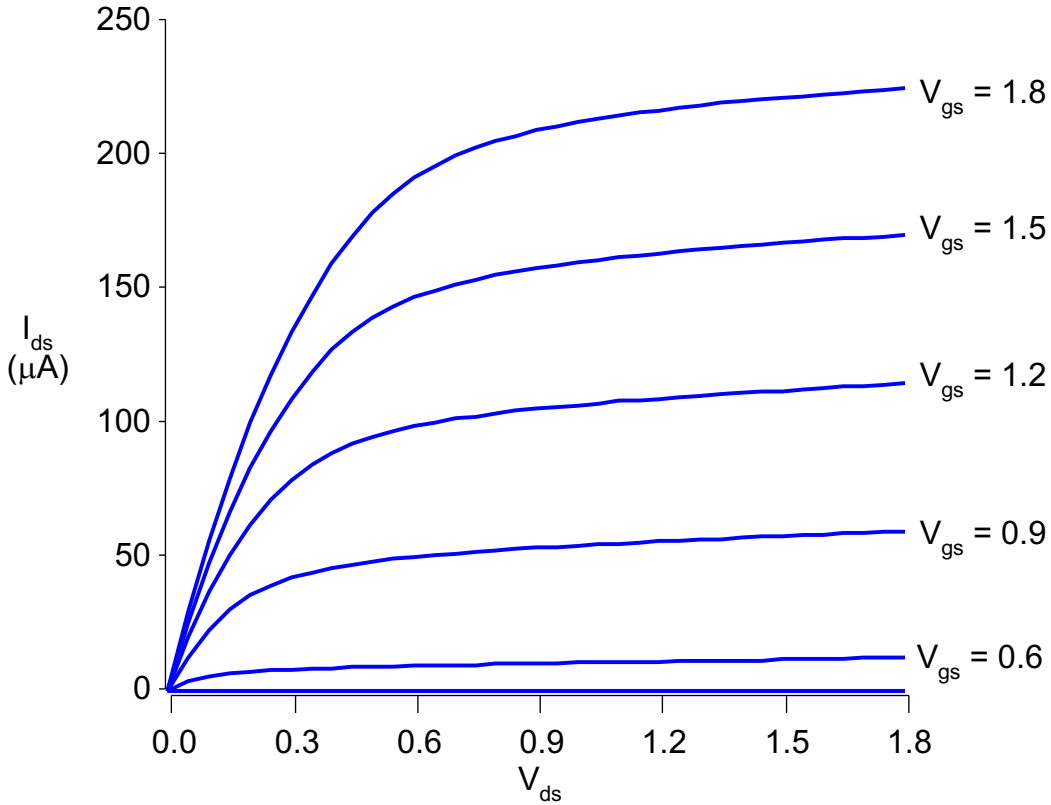

MOSFET Elements

M element for MOSFET

```
Mname drain gate source body type
+ W=<width> L=<length>
+ AS=<area source> AD = <area drain>
+ PS=<perimeter source> PD=<perimeter drain>
```

Transient Analysis

```
* inv.sp

* Parameters and models
*-----------------------------------------------
.param SUPPLY=1.8
.option scale=90n
.include '../models/tsmc180/models.sp'
.temp 70
.option post

* Simulation netlist
*-----------------------------------------------
Vdd      vdd      gnd      'SUPPLY'
Vin      a        gnd      PULSE    0 'SUPPLY' 50ps 0ps 0ps 100ps 200ps
M1       y        a        gnd      gnd      NMOS     W=4      L=2
+ AS=20 PS=18 AD=20 PD=18
M2       y        a        vdd      vdd      PMOS     W=8      L=2
+ AS=40 PS=26 AD=40 PD=26

* Stimulus
*-----------------------------------------------
.tran 1ps 200ps
.end
```

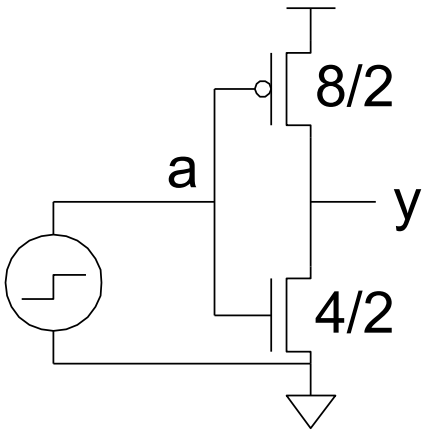

Transient Results

- **Unloaded inverter**
  - Overshoot
  - Very fast edges

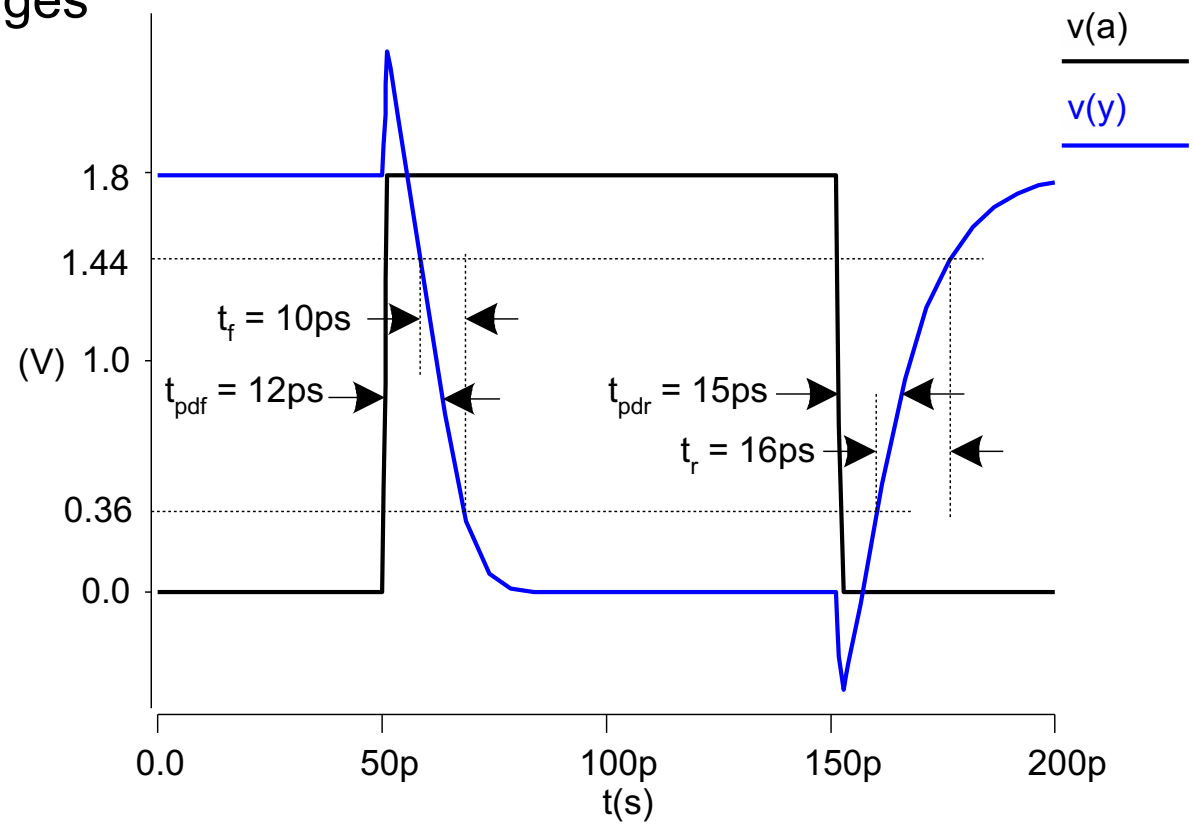

Subcircuits

- **Declare common elements as subcircuits**

```
.subckt inv a y N=4 P=8
M1 y a gnd gnd NMOS W='N' L=2
+ AS='N*5' PS='2*N+10' AD='N*5' PD='2*N+10'
M2 y a vdd vdd PMOS W='P' L=2
+ AS='P*5' PS='2*P+10' AD='P*5' PD='2*P+10'
.ends
```

- **Ex: Fanout-of-4 Inverter Delay**
  - Reuse inv
  - Shaping
  - Loading

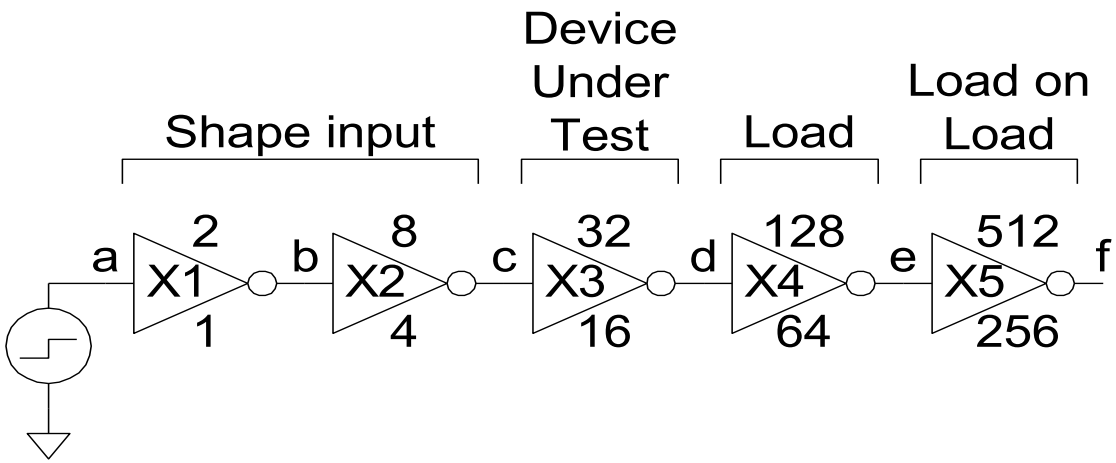

FO4 Inverter Delay

```
* fo4.sp

* Parameters and models
*-----------------------------------------------------------------------
.param SUPPLY=1.8
.param H=4
.option scale=90n
.include '../models/tsmc180/models.sp'
.temp 70
.option post

* Subcircuits
*-----------------------------------------------------------------------
.global vdd gnd
.include '../lib/inv.sp'

* Simulation netlist
*-----------------------------------------------------------------------
Vdd      vdd      gnd      'SUPPLY'
Vin      a        gnd      PULSE    0 'SUPPLY' 0ps 100ps 100ps 500ps 1000ps
X1       a        b        inv               * shape input waveform
X2       b        c        inv      M='H'    * reshape input waveform
```

FO4 Inverter Delay Cont.

```
X3      c       d       inv     M='H**2' * device under test
X4      d       e       inv     M='H**3' * load
x5      e       f       inv     M='H**4' * load on load

* Stimulus
*-----------------------------------------------------------------------
.tran 1ps 1000ps
.measure tpdr                                * rising prop delay
+     TRIG v(c)  VAL='SUPPLY/2' FALL=1
+     TARG v(d)  VAL='SUPPLY/2' RISE=1
.measure tpdf                                * falling prop delay
+     TRIG v(c)  VAL='SUPPLY/2' RISE=1
+     TARG v(d)  VAL='SUPPLY/2' FALL=1
.measure tpd param='(tpdr+tpdf)/2'           * average prop delay
.measure trise                                        * rise time
+       TRIG v(d)        VAL='0.2*SUPPLY' RISE=1
+       TARG v(d)        VAL='0.8*SUPPLY' RISE=1
.measure tfall                                        * fall time
+       TRIG v(d)        VAL='0.8*SUPPLY' FALL=1
+       TARG v(d)        VAL='0.2*SUPPLY' FALL=1
.end
```

FO4 Results

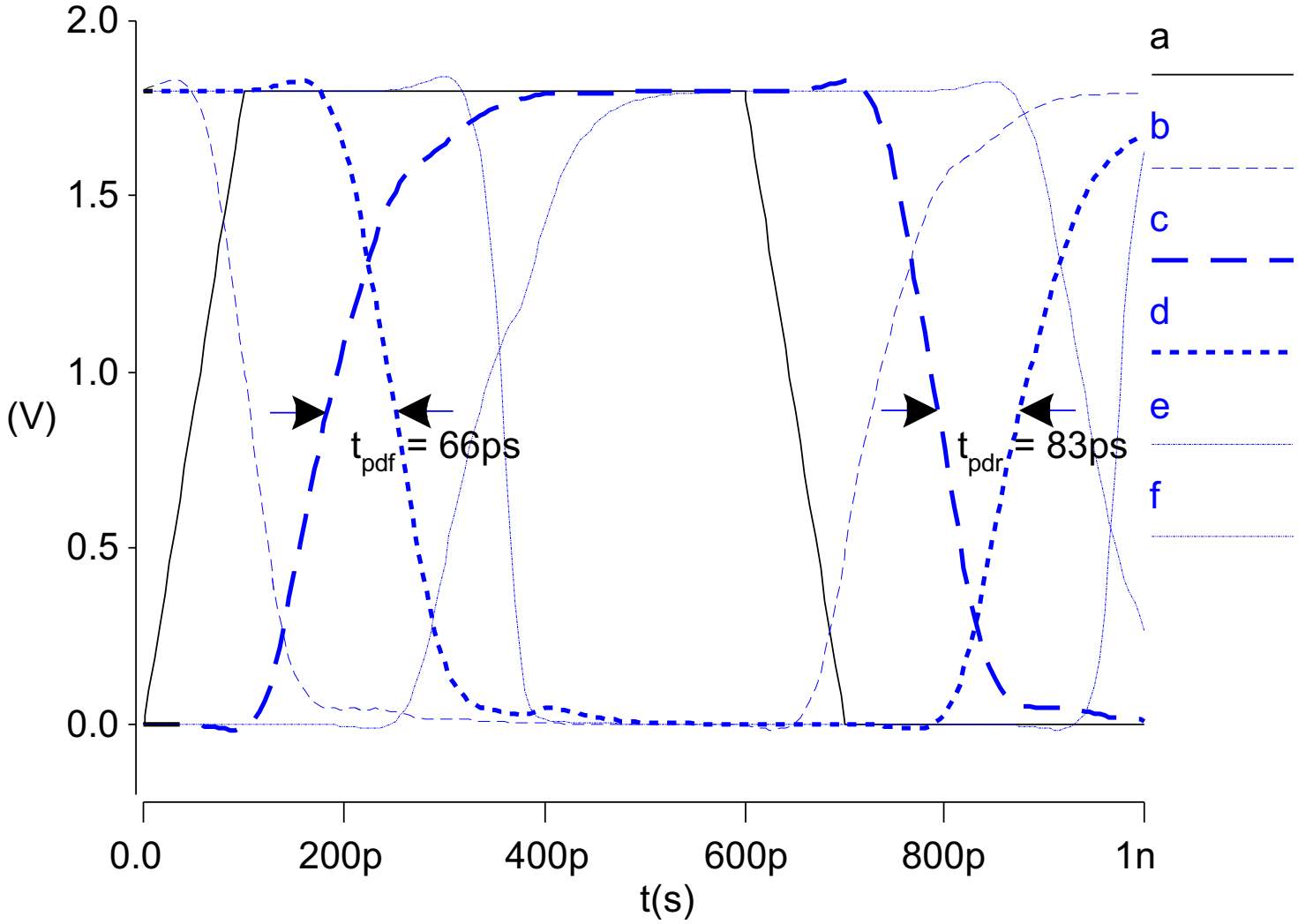
2.0
1.5
1.0
0.5
0.0
(V)
0.0
200p
400p
600p
800p
1n
t(s)
t_{pdf} = 66ps
t_{pdr} = 83ps
a
b
c
d
e
f

Power Measurement

- **HSPICE can measure power**
  - Instantaneous P(t)
  - Or average P over some interval

```
.print P(vdd)
.measure pwr AVG P(vdd) FROM=0ns TO=10ns
```

- **Power in single gate**
  - Connect to separate V_{DD} supply
  - Be careful about input power

■SPICE overview

- ►N equations in terms of N unknown Node voltages
- ►More generally using modified nodal analysis

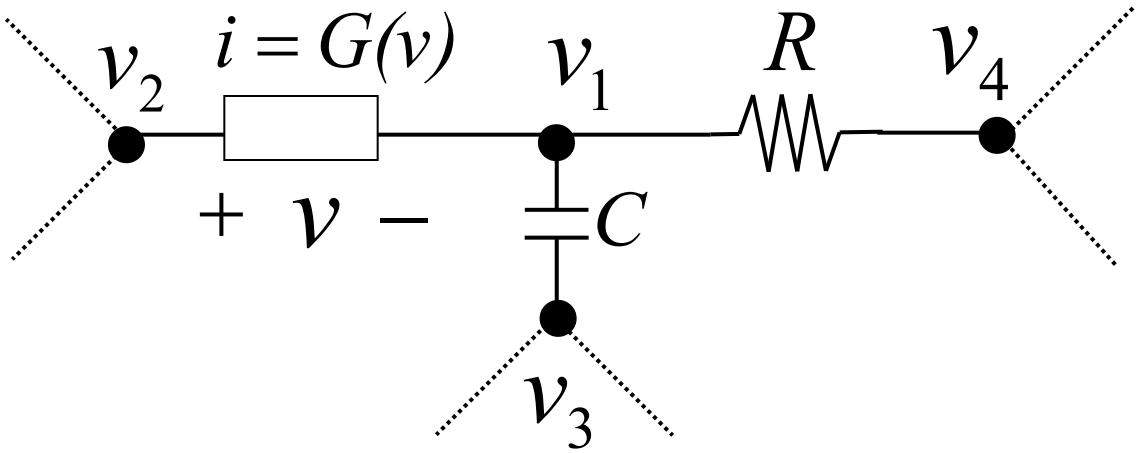

Time Domain Equations at node 1:

$$C\frac{d(v_1 - v_3)}{dt} + \frac{(v_1 - v_4)}{R} - G(v_2 - v_1) = 0$$

- **If we do this for all N nodes:**

$$F(\dot{\vec{x}}(t), \vec{x}(t), \vec{u}(t)) = 0 \qquad \vec{x}(0) = \vec{X}$$

$\vec{x}(t) =$ **N dimensional vector of unknown node voltages**

$\vec{u}(t) =$ **vector of independent sources**

$F =$ **nonlinear operator**

- **Closed form solution is not possible for arbitrary order of differential equations**

- **We must approximate the solution of:**

$$F(\dot{\vec{x}}(t), \vec{x}(t), \vec{u}(t)) = 0 \qquad \vec{x}(0) = \vec{X}$$

- **This is facilitated in SPICE via numerical solutions**

■ Basic circuit analyses

- ► (Nonlinear) DC analysis
  - ▼ Finds the DC operating point of the circuit
  - ▼ Solves a set of nonlinear algebraic eqns

- ► AC analysis
  - ▼ Performs frequency-domain small-signal analysis
  - ▼ Require a preceding DC analysis
  - ▼ Solves a set of complex linear eqns

- ► (Nonlinear) transient analysis
  - ▼ Computes the time-domain circuit transient response
  - ▼ Solves a set of nonlinear different eqns
  - ▼ Converts to a set nonlinear algebraic of eqns using numerical integration

SPICE offers practical techniques to solve circuit problems in time & freq. domains

- Interface to device models
  - Transistors, diodes, nonlinear caps etc
- Sparse linear solver
- Nonlinear solver – Newton-Raphson method
- Numerical integration
- Convergence & time-step control

- **Circuit equations are usually formulated using**
  - Nodal analysis
    - N equations in N nodal voltages
  - Modified analysis
    - Circuit unknowns are nodal voltages & some branch currents
    - Branch current variables are added to handle
      - Voltages sources
      - Inductors
      - Current controlled voltage source etc
- **Formulations can be done in both time and frequency**

How do we set up a matrix problem given a list of linear(ized) circuit elements?

Similar to reading a netlist for a linear circuit:

* Element Name	From	To	Value
I_1	0	1	$1mA$
R_1	1	0	10Ω
R_2	1	2	5Ω
R_3	2	0	100Ω

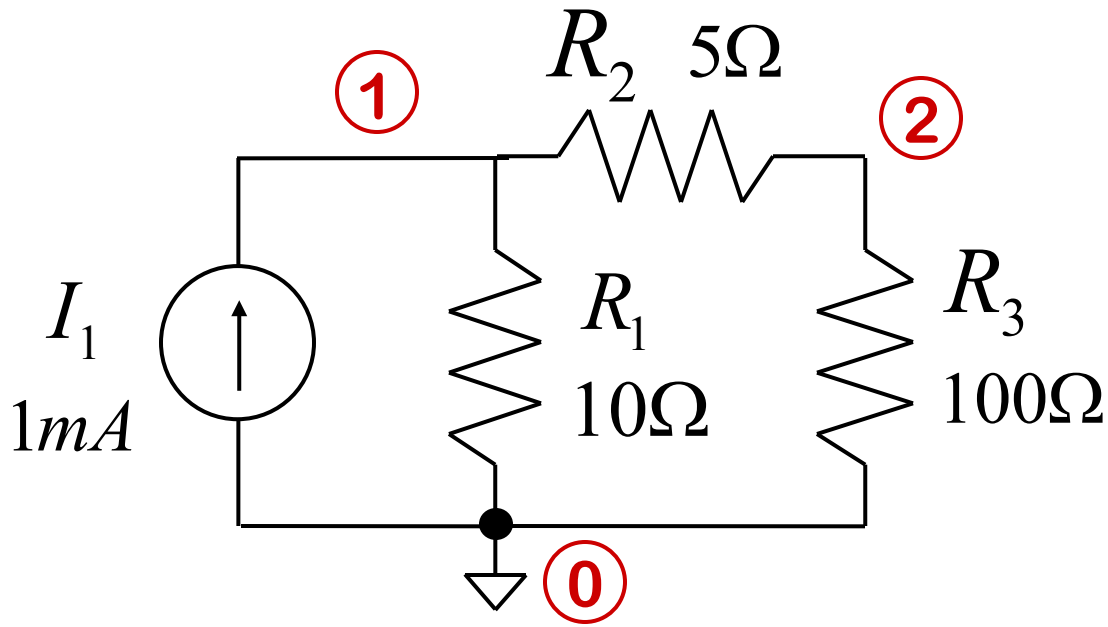

The nodal analysis matrix equations are easily constructed via KCL at each node:

$$Y\vec{v} = \vec{J}$$

- **Naïve approach**
  - a) Write down the KCL eqn for each node
  - b) Combine all of them to a get N eqns in N node voltages

- **Intuitive for hand analysis**

- **Computer programs use a more convenient "element" centric approach**
  - Element stamps

Instead of converting the netlist into a graph and writing KCL eqns, *stamp* in elements one at a time:

Stamps: add to existing matrix entries

$$Y \begin{array}{cc} \begin{bmatrix} \frac{1}{R} & -\frac{1}{R} \\ -\frac{1}{R} & \frac{1}{R} \end{bmatrix} & \begin{array}{l} \leftarrow \text{From row } i \\ \leftarrow \text{To row } j \end{array} \\ \begin{array}{cc} \uparrow & \uparrow \\ \text{From col. } i & \text{To col. } j \end{array} & \end{array}$$

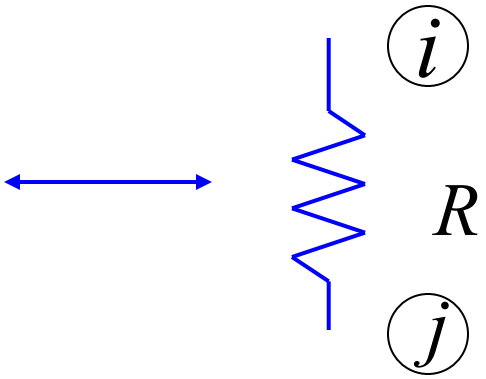

- **RHS $\vec{J}$ of equations are stamped in a similar way:**

$$\begin{bmatrix} -I \\ I \end{bmatrix} \begin{array}{l} \leftarrow \text{From row } i \\ \leftarrow \text{To row } j \end{array}$$

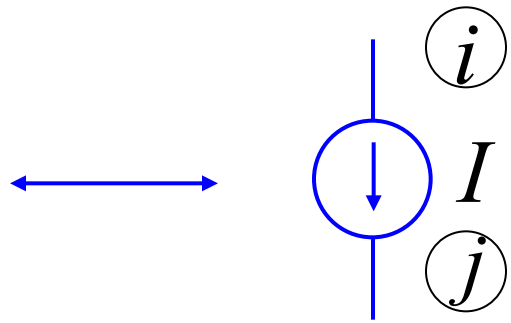

- **Stamping our simple example one element at a time:**

I_1	0	1	$1mA$
R_1	1	0	10Ω
R_2	1	2	5Ω
R_3	2	0	100Ω

$$\begin{bmatrix} G_1 + G_2 & -G_2 \\ -G_2 & G_2 + G_3 \end{bmatrix} \cdot \begin{bmatrix} V_1 \\ V_2 \end{bmatrix} = \begin{bmatrix} I_1 \\ 0 \end{bmatrix}$$

- We know that nonlinear elements are first converted to linear components, then stamped

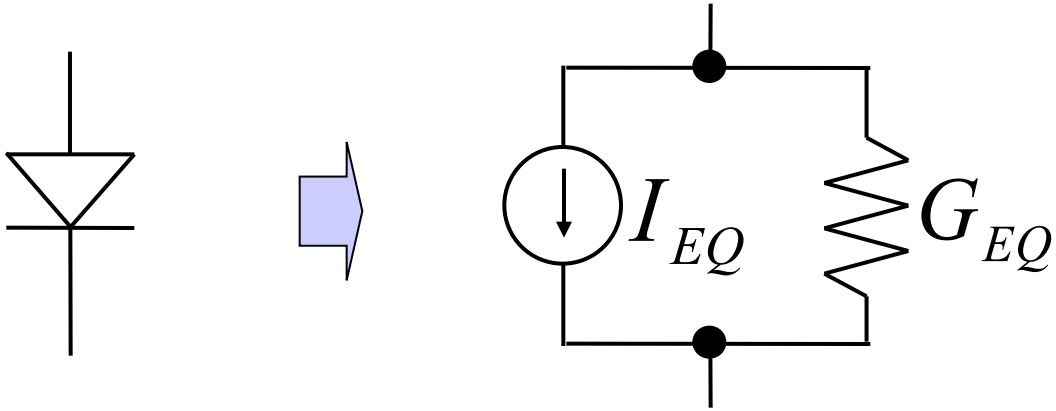

- For 3 & 4 terminal elements we know that the linearized models have linear controlled sources

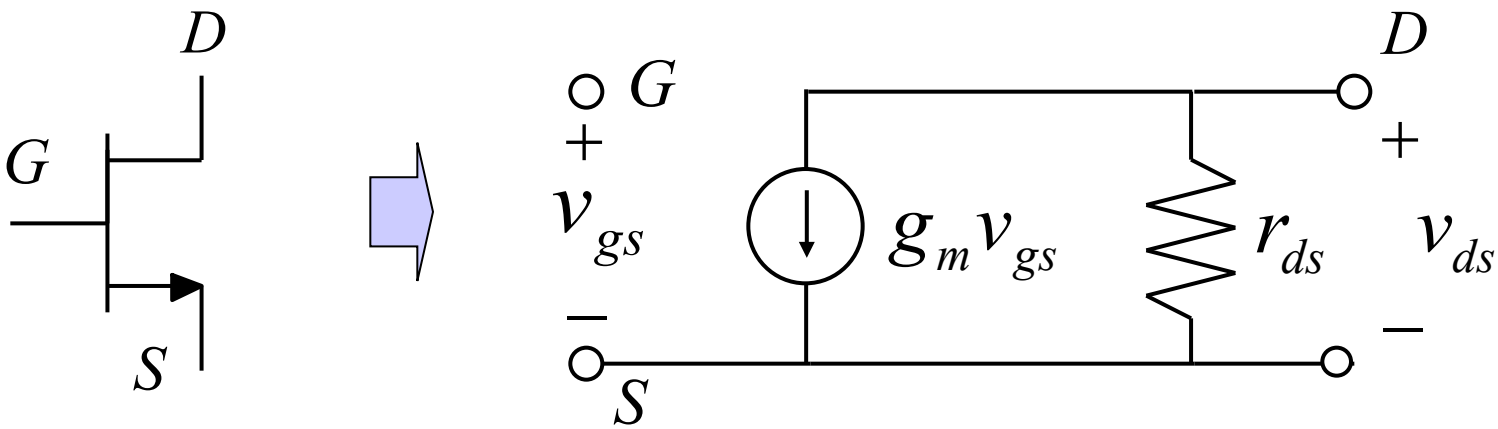

- We can stamp in MOSFETs in terms of a complete stamp, or in terms of simpler element stamps

Voltage controlled current source

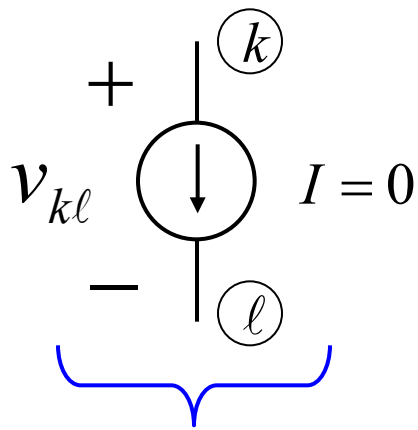

Voltmeter

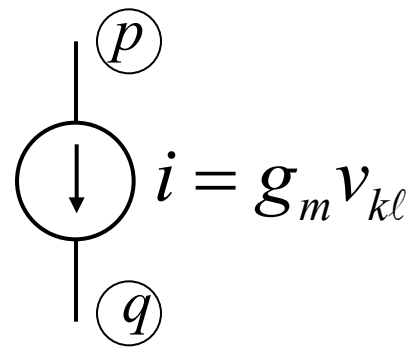

$$\begin{array}{c} \begin{bmatrix} g_m & -g_m \\ -g_m & g_m \end{bmatrix} \begin{array}{l} \leftarrow \text{row } p \\ \leftarrow \text{row } q \end{array} \\ \begin{array}{cc} \uparrow & \uparrow \\ \text{col } k & \text{col } \ell \end{array} \end{array}$$

Large value that does not fall on diagonal of Y!

- All other types of controlled sources include voltage sources

- Voltage sources are inherently incompatible with nodal analysis
- Grounded voltages sources are easily accommodated

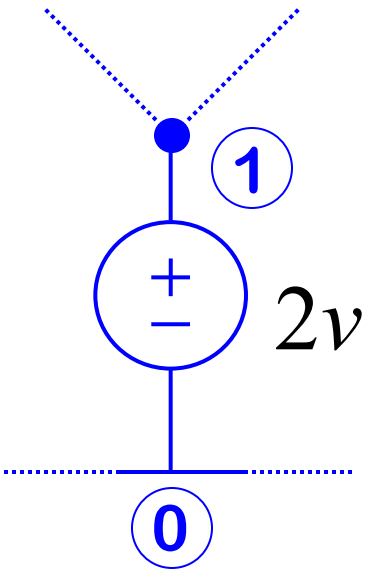

$$\begin{bmatrix} 1 & \cdots & \\ \vdots & & \\ & & \end{bmatrix} \begin{bmatrix} v_1 \\ v_2 \\ \vdots \end{bmatrix} = \begin{bmatrix} 2 \\ \vdots \\ \\ \end{bmatrix}$$

- But a voltage source in between nodes is more difficult

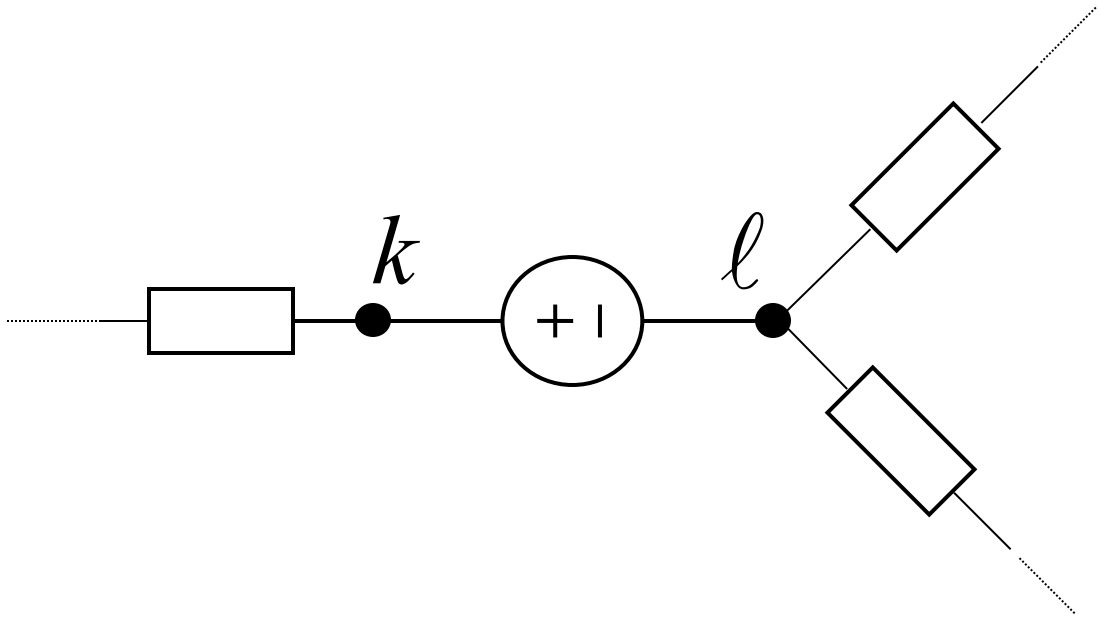

- Node voltages k and ℓ are not independent

- We no longer have N independent node voltage variables
- So we can potentially eliminate one equation and one variable (section 2.3 of reference [1])
- But the more popular solution is <u>modified</u> nodal analysis (MNA)

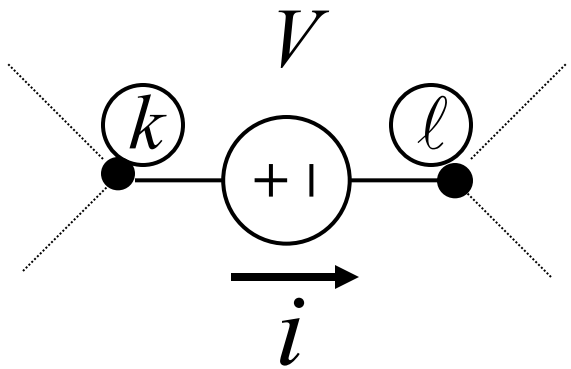

Create one <u>extra</u> variable and one extra equation

- Extra variable: voltage source current
- Allows us to write KCL at nodes k and ℓ
- Extra equation

$$v_k - v_\ell = V$$

- Advantage: now have an easy way of printing current results - - ammeter

Voltage source stamp:

$$
\begin{array}{l}
\textbf{row } k \\
\textbf{row } \ell \\
\textbf{row } N+1
\end{array}
\begin{array}{c}
\left[\begin{array}{cc|c}
 & & 1 \\
 & & -1 \\
\hline
1 & -1 & 0
\end{array}\right] \\
\begin{array}{ccc}
\textbf{col} & \textbf{col} & \textbf{col} \\
k & \ell & N+1
\end{array}
\end{array}
\left[\begin{array}{c} \\ \\ \hline i \end{array}\right]
=
\left[\begin{array}{c} \\ \\ \hline V \end{array}\right]
$$

- **Current-controlled current source (e.g. BJT) has to stamp in an ammeter and a controlled current source**

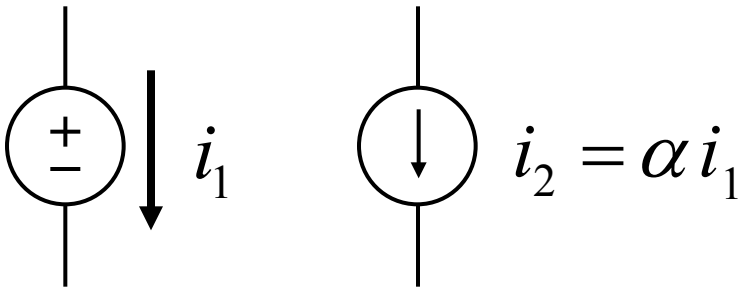

In general, we would not blindly build the matrix from an input netlist and then attempt to solve it

Various illegal ckts are possible:

Cutsets of current sources

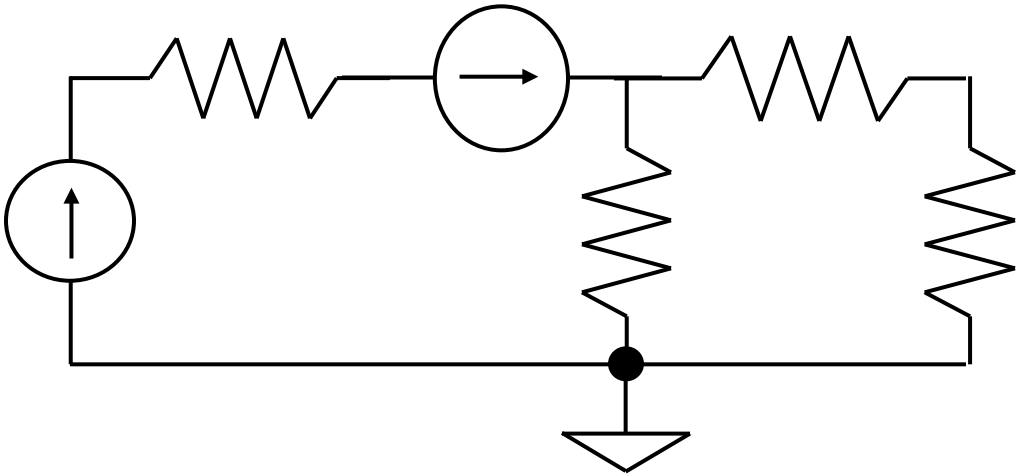

Loops of voltage sources

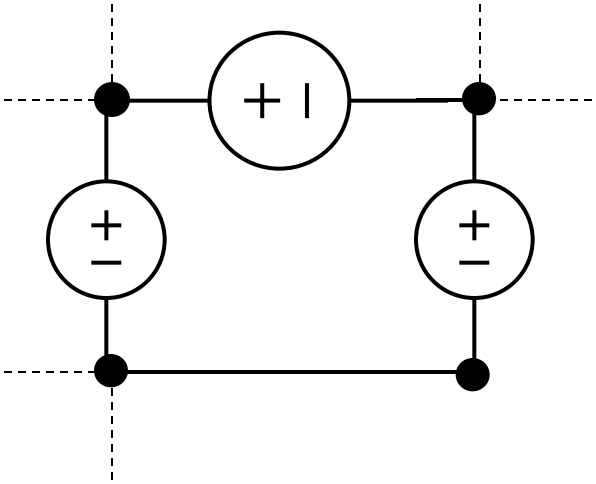

Dangling nodes

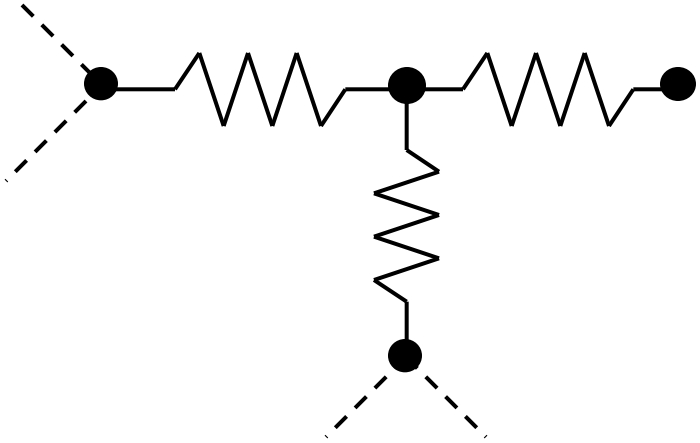

- **Once we efficiently formulate MNA equations, an efficient solution to $Y\vec{v} = \vec{J}$ is even more important**

- **For large ckts the matrix is really sparse**
  - Number of entries in Y is a function of number of elements connected to the corresponding node

- **Inverting a sparse matrix is never a good idea since the inverse is not sparse!**

- **Instead direct solution methods employ Gaussian Elimination or LU factorization**