2025S CPE 690-A - Introduction to VLSI Design

Homework 1

Guillaume Wantiez

Exercise 1 – CMOS 4-Input NOR Gate transistor-level schematic

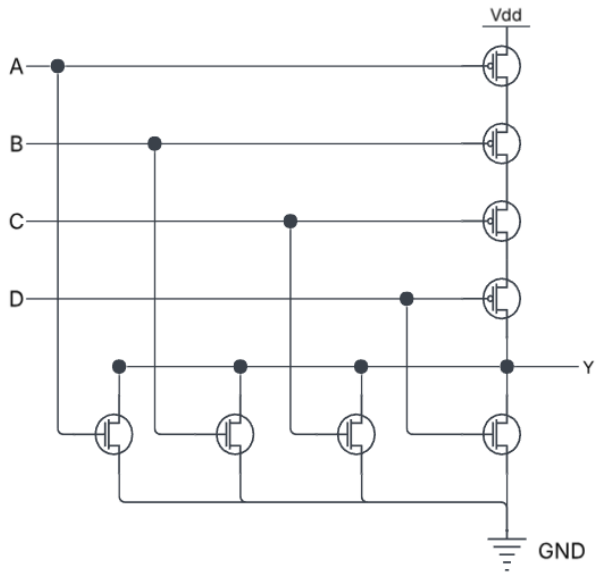

Exercise 2 – Compound CMOS logic gates transistor-level schematic

a) **Y = INV(ABC+D)**

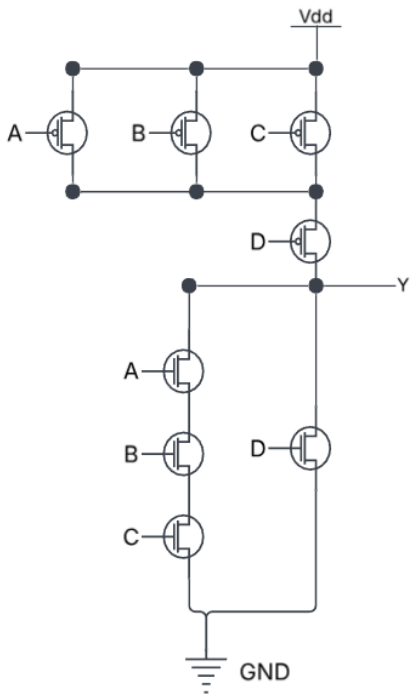

b) Y = INV((AB+C).D)

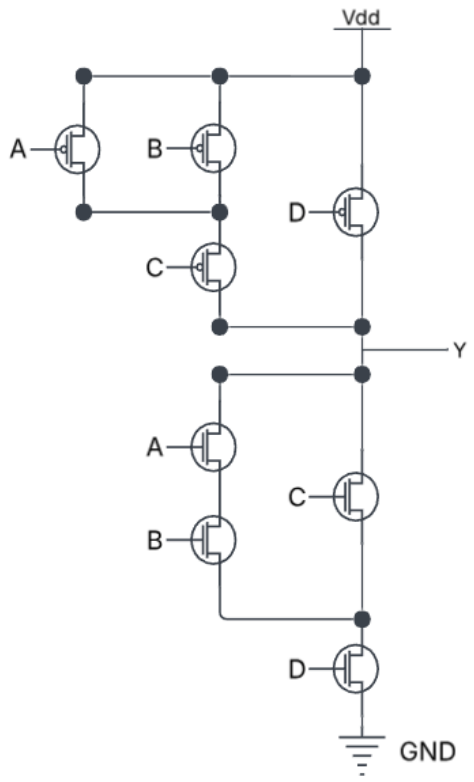

c) Y = INV(AB+C.(A+B))

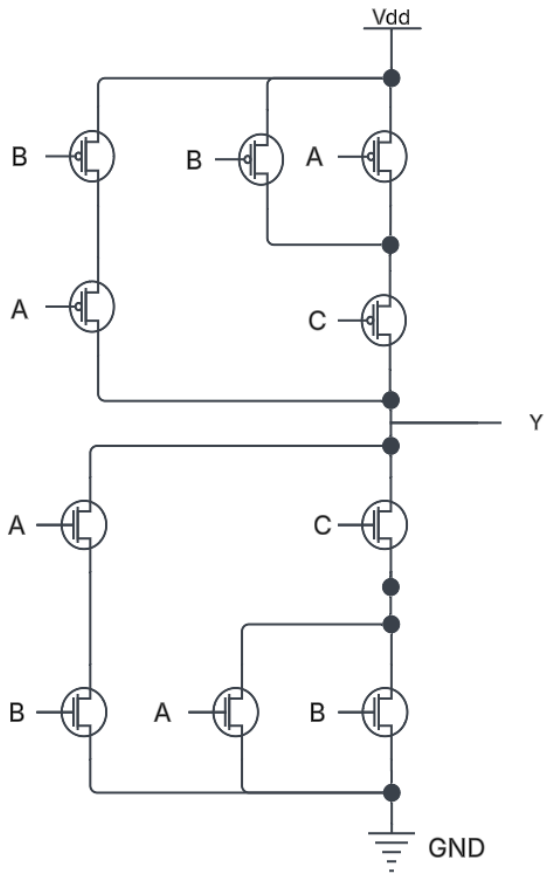

Exercise 3 – CMOS 3-input XOR gate transistor schematic

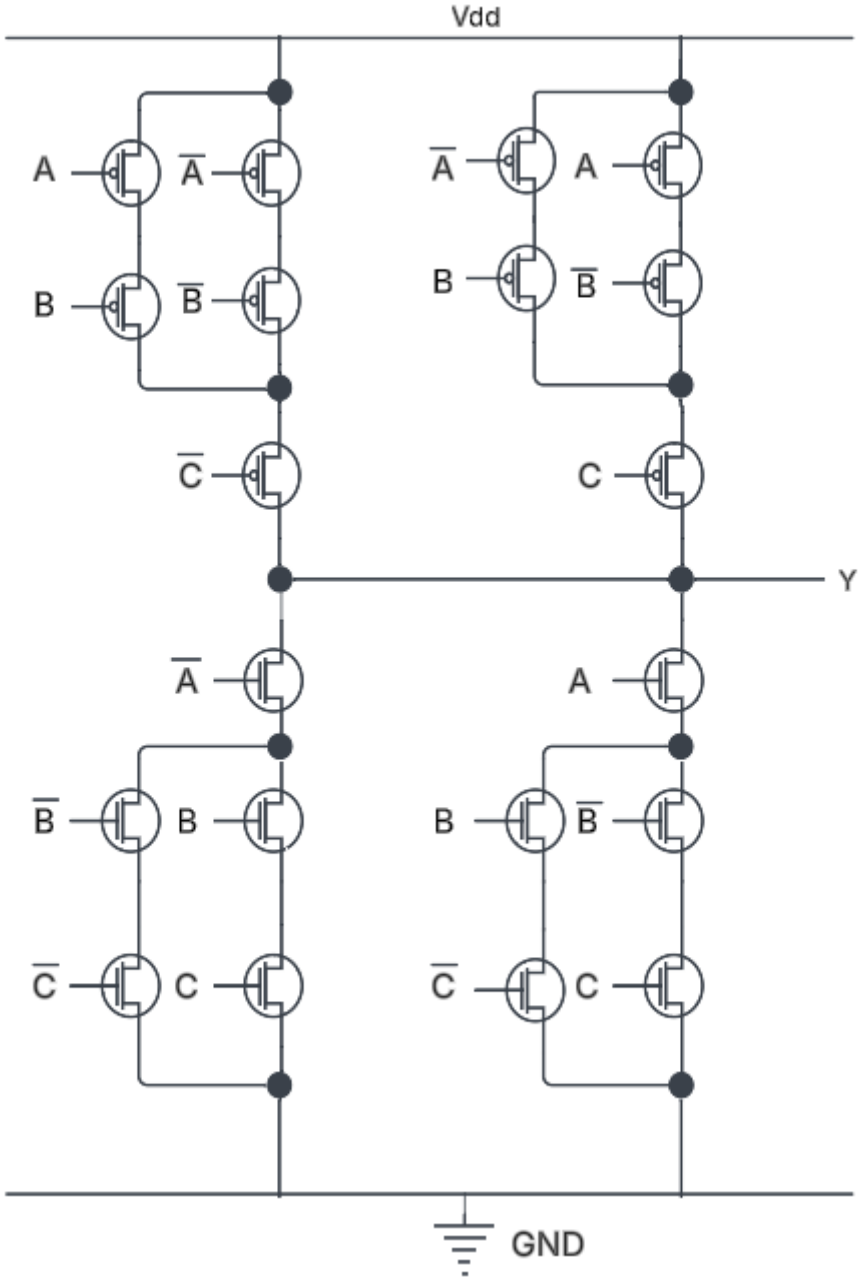

Exercise 4 – Complex transistor schematic

a) **2:4 decoder**

$$Y0 = \overline{A0}.\overline{A1} = \overline{A0+A1}$$

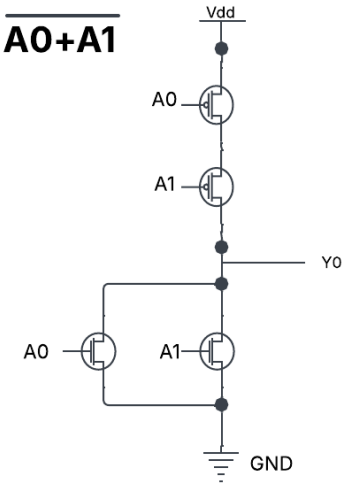

$$Y1 = A0.\overline{A1} = \overline{\overline{A0}+A1}$$

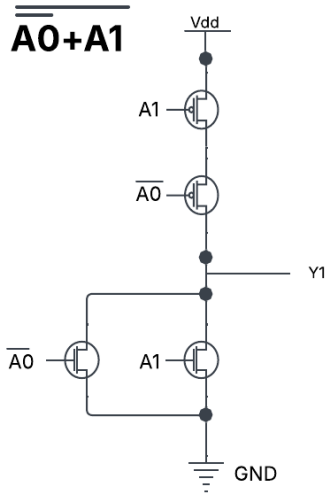

$$Y2 = \overline{A0}.A1 = \overline{A0+\overline{A1}}$$

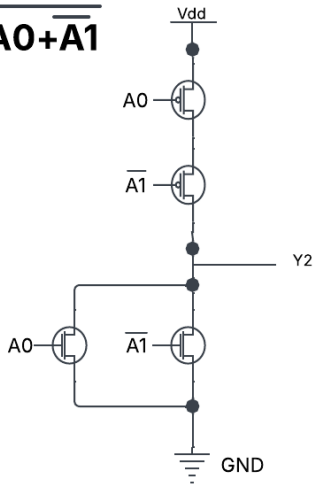

$$Y3 = A0.A1 = \overline{\overline{A0}+\overline{A1}}$$

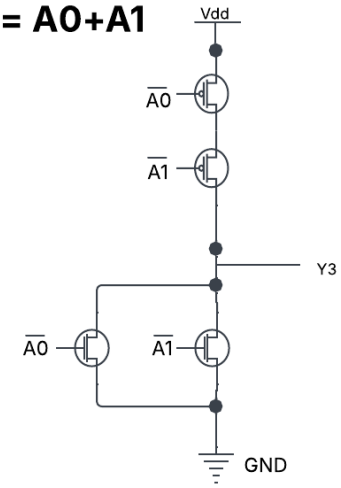

b) **3:2 priority encoder**

$$Y0 = \overline{A0}.(A1+\overline{A2})$$

$$= \overline{A0+(\overline{A1}.A2)}$$

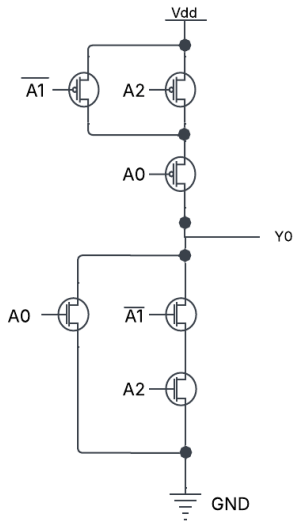

$$Y1 = \overline{A0}.\overline{A1} = \overline{A0+A1}$$

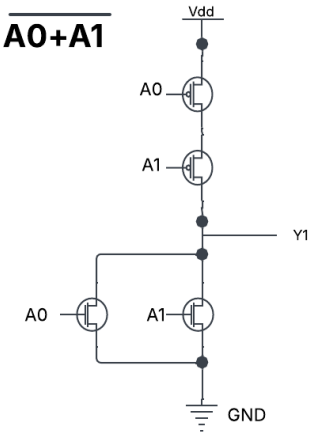

<u>Exercise 5 – Stick Diagram from transistor logic schematic of Ex 1</u>

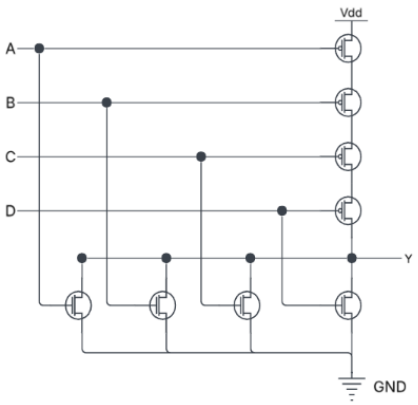

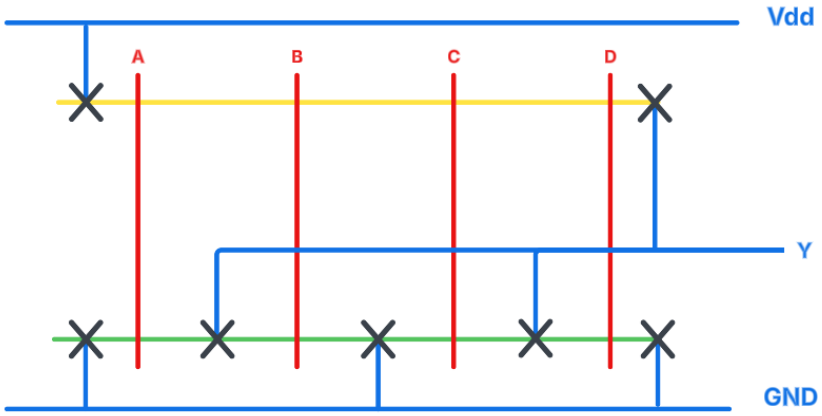

<u>Exercise 6 – Estimation of stick diagram from ex 5</u>

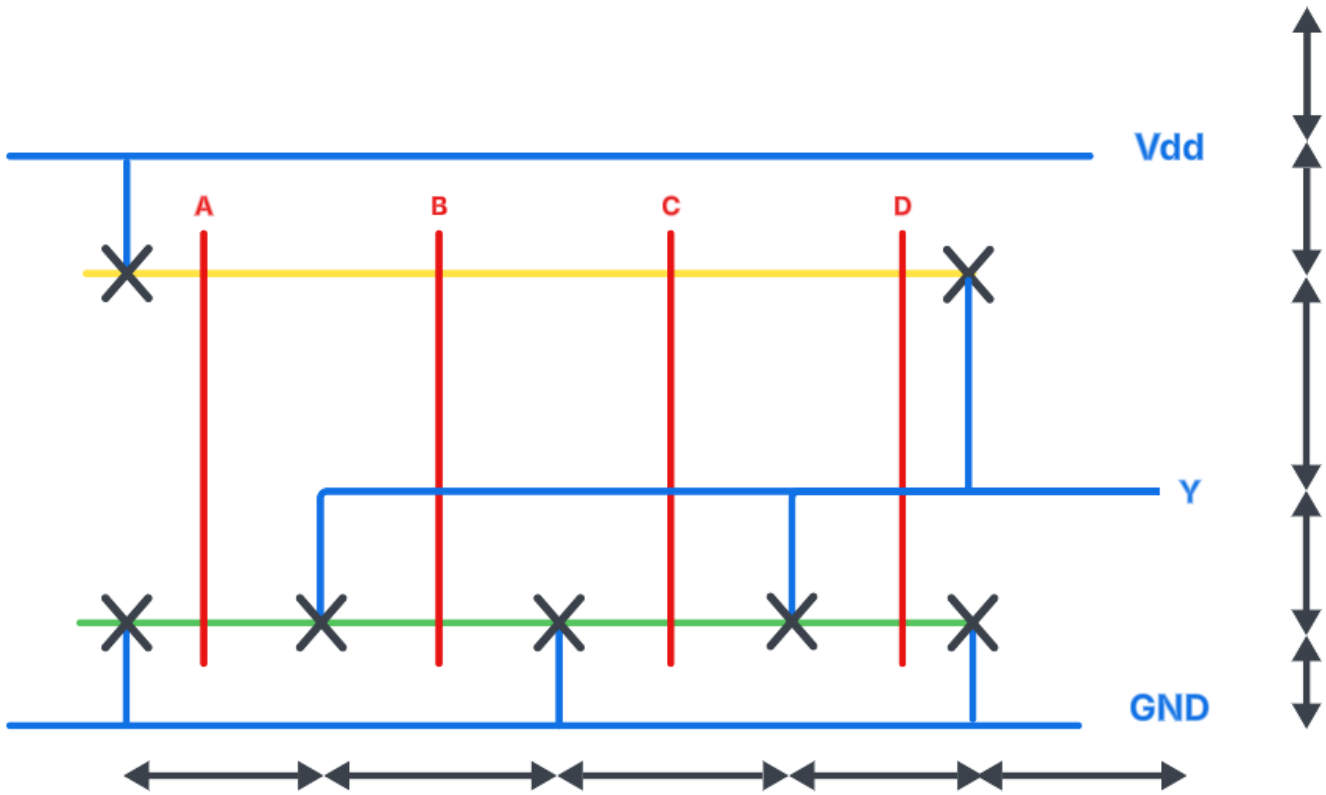

From the above stick diagram, we can see a length of 5 wired tracks and a width of 5 wired tracks:

L = 5 * 8λ = 40λ

W = 5 * 8λ = 40λ

L*W = 1600 λ^2

<u>Exercise 7 – CMOS compound OR-OR-AND-INVERT (OAI22) gate computing F= INV((A+B) · (C+D))</u>

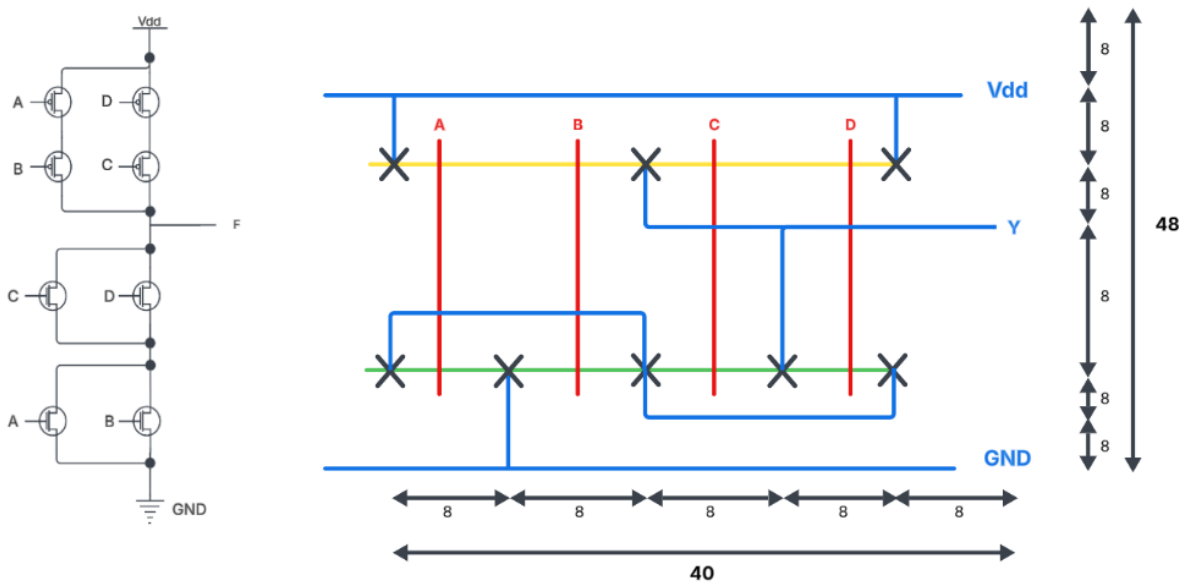

From the above stick diagram, we can see a length of 5 wired tracks and a width of 6 wired tracks:

L = 5 * 8 λ = 40λ

W = 6 * 8λ = 48λ

Area = 1920λ^2

<u>Exercise 8 – 3 input CMOS minority gate</u>

Let's consider the following as the minority gate logical function:

Y = $\neg[(A_0 \,.\, A_1) + (A_0 \,.\, A_2) + (A_1 \,.\, A_2)]$

Let's compute PDN and PUN logical functions:

$$F_{PDN} = (A_0A_1) + (A_0A_2) + (A_2A_1) = A_0(A_1 + A_2) + (A_1A_2)$$

For PUN we swap the operations and keep the non inverted inputs since PUN is made of P-MOS:

$$F_{PUN} = [A_0 + (A_1A_2)].(A_1 + A_2) = ([A_0 + (A_1A_2)]A_1) + ([A_0 + (A_1A_2)]A_2)$$
$$= (A_0A_1 + A_1A_2) + (A_0A_2 + A_1A_2) = A_0A_1 + A_0A_2 + A_1A_2 = A_0(A_1 + A_2) + A_1A_2$$
$$F_{PUN} = F_{PDN}$$

Next, we sketch the following transistor level schematic and stick diagram:

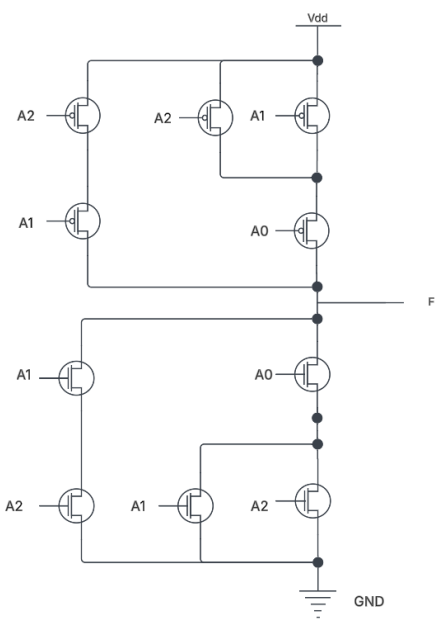

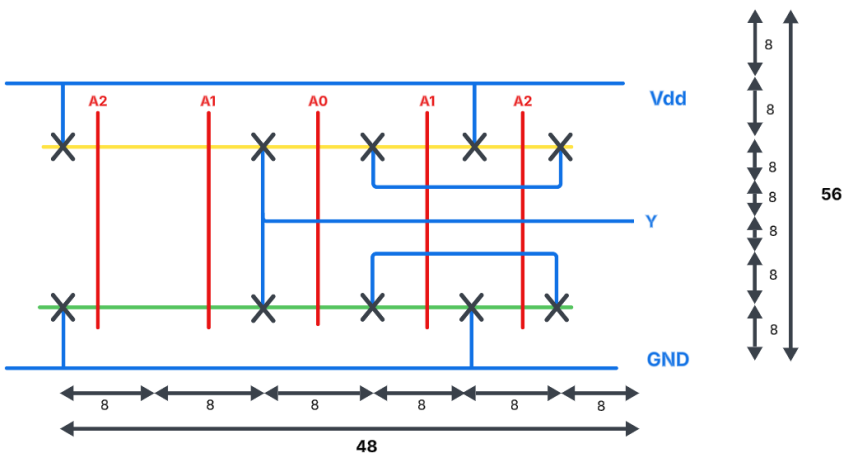

From the above stick diagram, we can see a length of 5 wired tracks and a width of 6 wired tracks:

L = 6 * 8 = 48λ

W = 7 * 8 = 56λ

Area = 2688λ^2