CPE 690 Midterm Exam (03/14/2025 15:00 pm – 17:00pm)

Student Name:

Q1 (A) Please calculate the Vs values for the following four circuit schematics. Vs should be expressed in terms of Vthn, Vthp, Vdd or VSS parameters. You should provide necessary calculation steps for obtaining the results. (10 pts)

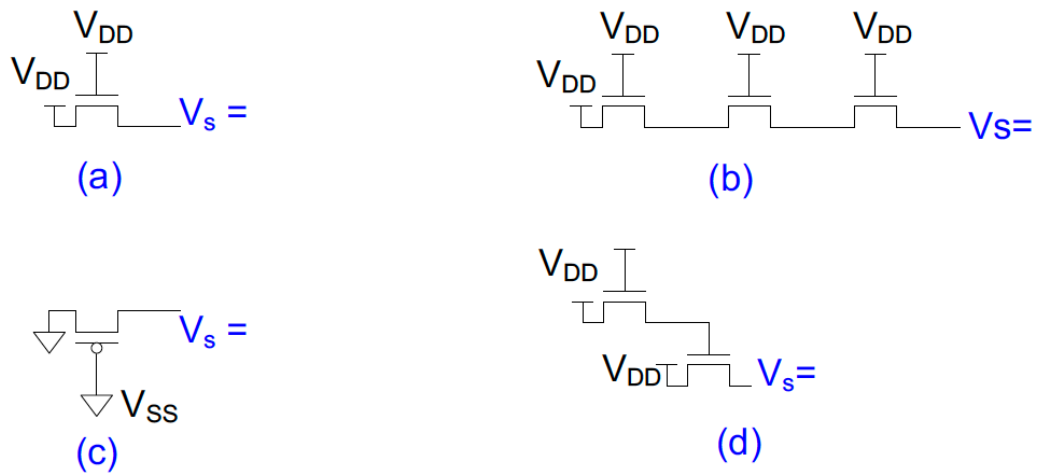

Q1 (B) Suppose VDD = 1.2 V and Vt = 0.4 V. Determine Vout in the figure for the following input voltage levels Vin. Neglect the body effect. (10 pts)

(a) Vin = 0 V
(b) Vin = 0.6 V
(c) Vin = 0.9 V
(d) Vin = 1.2 V.

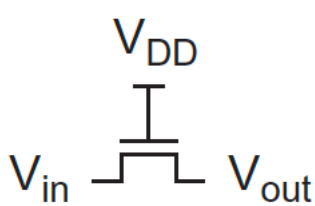

Q2. For the NMOS transistor circuit shown in Fig. 1, as V_G is varied from 0V to 4V, plot I_{DS} as a function of V_G (the trend of the current change should be correct). You need to clearly mark the different regions of operation for the NMOS transistor as V_G is varied. Note: the threshold voltage is V_{T0}=0.3V and the body effect can be neglected. (20 pts)

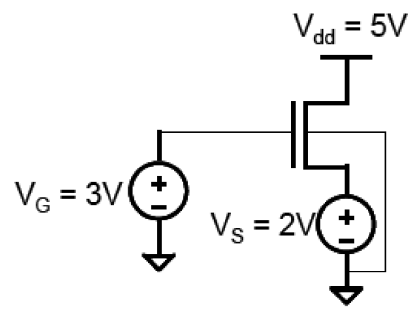

Fig. 1.

Q3. Assume a size *k* NMOS transistor has the following equivalent circuit model for delay analysis. Also assume that the mobility of electrons is twice as much as that of holes.

1. Draw a **4-input NOR** schematic and size all the transistors such that the (worst-case) rise and fall equivalent resistances are matched. Explain how you size the transistors. (5 pts)
2. Draw a stick diagram of the above **4-input NOR gate**. You want to minimize the diffusion region area in the layout such that the diffusion capacitance can be minimized. Assume the minimum transistor channel length is L=2λ. Estimate the layout area using λ parameter. (5 pts)
3. Estimate the propagation (worst-case) and contamination (best-case) output falling and rising delays (so you need to compute four delay results) when the **4-input NOR gate** is driving h copies of the same **4-input NOR** gates. (10 pts)

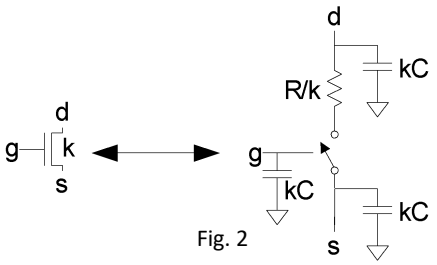

Fig. 2

Q4. Consider the following inverter chain design problem. The unit-sized (1X) inverter has a normalized parasitic delay p=1 with an input capacitance of C_1. The load capacitance at the end of the chain is $C_L = 256C_1$. The first inverter's size is fixed at 1X. (1) Determine the optimum number of inverter stages and the optimum size for each inverter. (2) What is your optimum propagation delay for the whole chain? (20 pts)

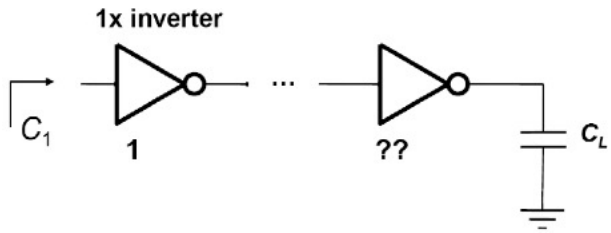

Fig. 3

Q5. (1) Please list the sources of power dissipation (dynamic and static powers). (2) How can we reduce dynamic power using circuit design techniques? (3) Compute the total energy consumption of the following inverter circuit for the given input waveform shown in Figure A (assume VDD=2V and C_L= 10 fF) (4) Determine the activity factors at each node in the following circuit design shown in Figure B (assume that the input probabilities are equal to 0.5). (20 pts)

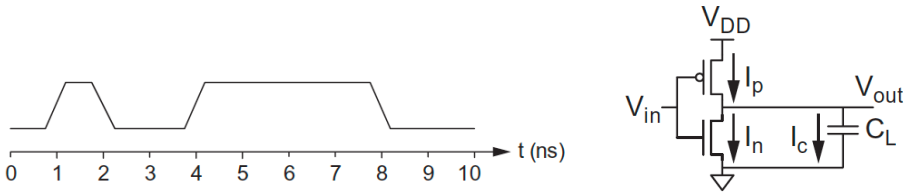

Figure A

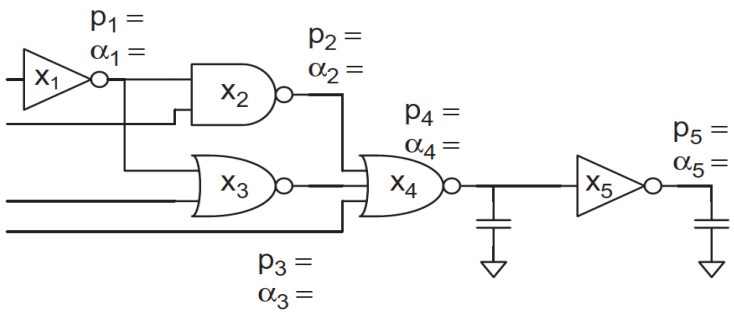

Figure B

Q6. Is there any feedback from you? Please answer the following questions. (Extra 10 pts)

1. What do you think about the course materials used in this class?
2. How do you think about the course organization?
3. Have you achieved your goal till now?
4. How about the current class progress? Too fast, too slow or just suitable for you?
5. Or is there anything missing in the course organization? Do you want to increase the homework load or the number of in-class quizzes to better consolidate your understanding?