Introduction to VLSI Design

Lecture 12
Packaging, Power and Clock Distributions

Zhuo Feng

Outline

- **Packaging**
- **Power Distribution**
- **Clock Distribution**

Packages

Package functions

- Electrical connection of signals and power from chip to board
- Little delay or distortion
- Mechanical connection of chip to board
- Removes heat produced on chip
- Protects chip from mechanical damage
- Compatible with thermal expansion
- Inexpensive to manufacture and test

Package Types

- **Through-hole vs. surface mount**

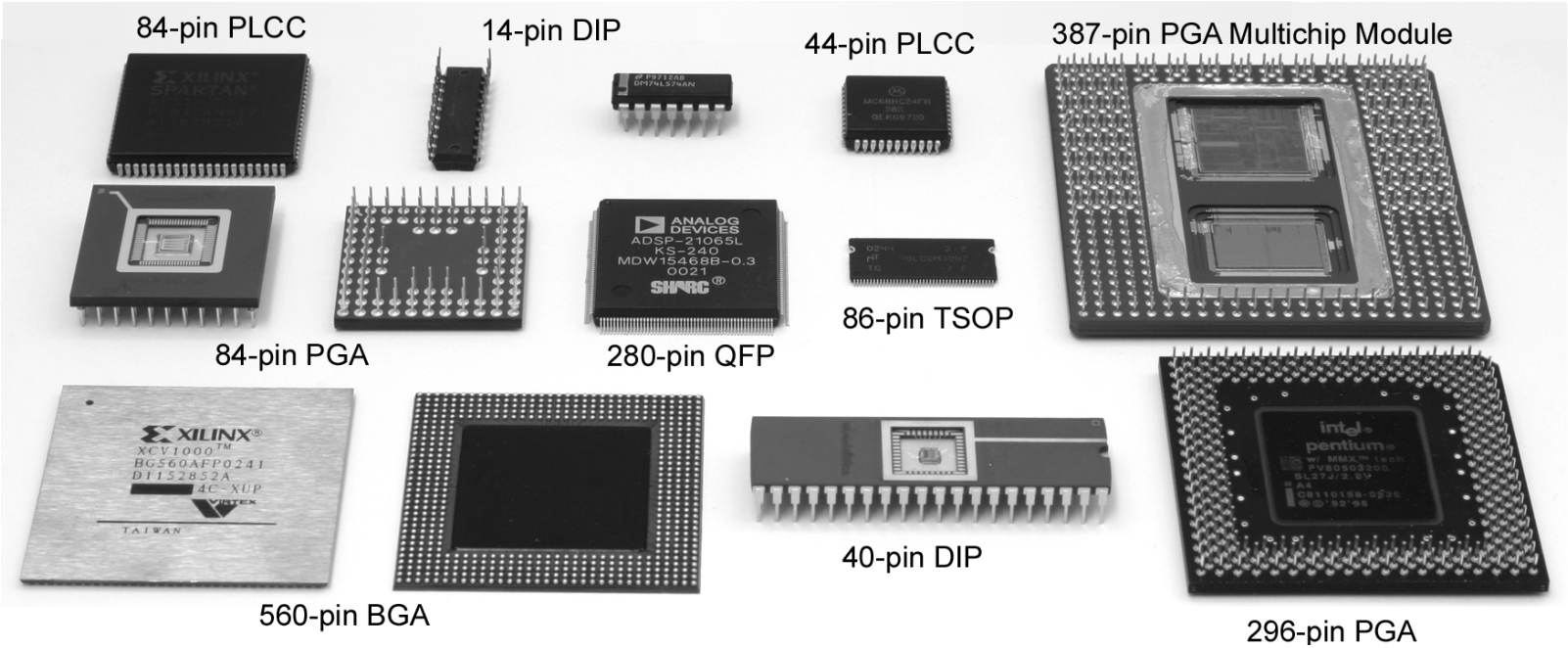

Multichip Modules

- **Pentium Pro MCM**
  - Fast connection of CPU to cache
  - Expensive, requires known good die

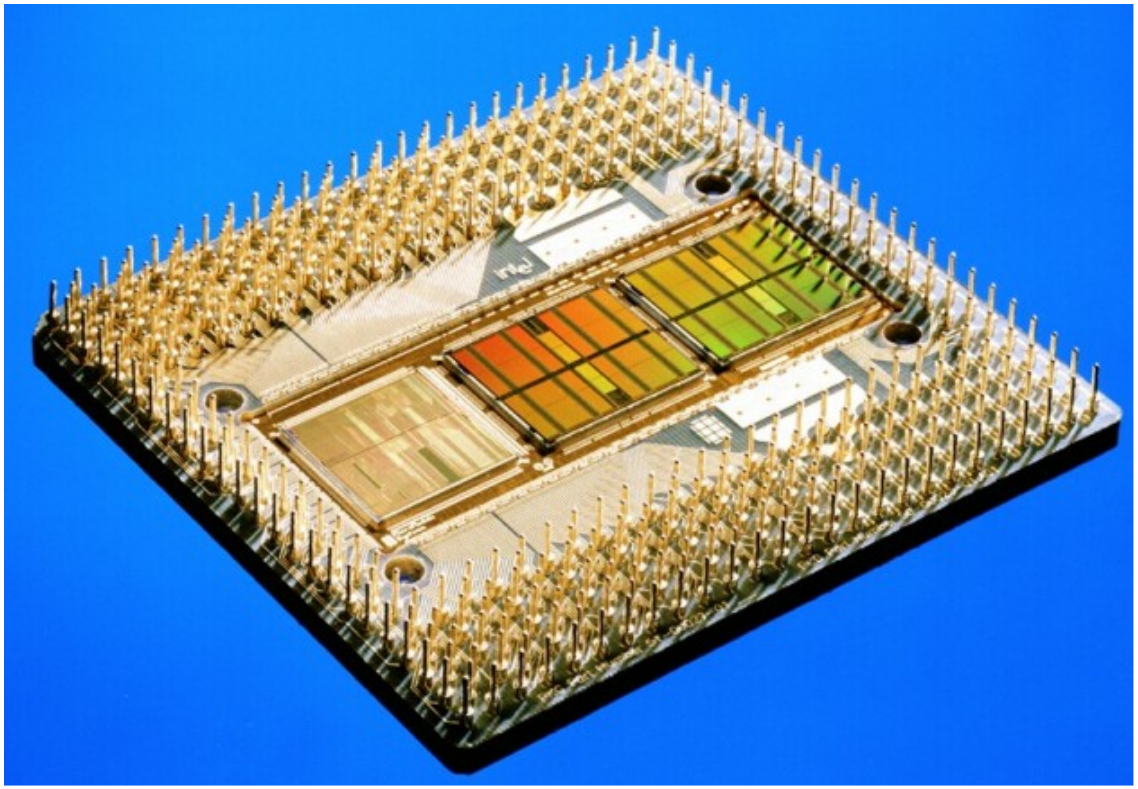

Chip-to-Package Bonding

- **Traditionally, chip is surrounded by *pad frame***
  - Metal pads on 100 – 200 μm pitch
  - Gold *bond wires* attach pads to package
  - *Lead frame* distributes signals in package
  - Metal *heat spreader* helps with cooling

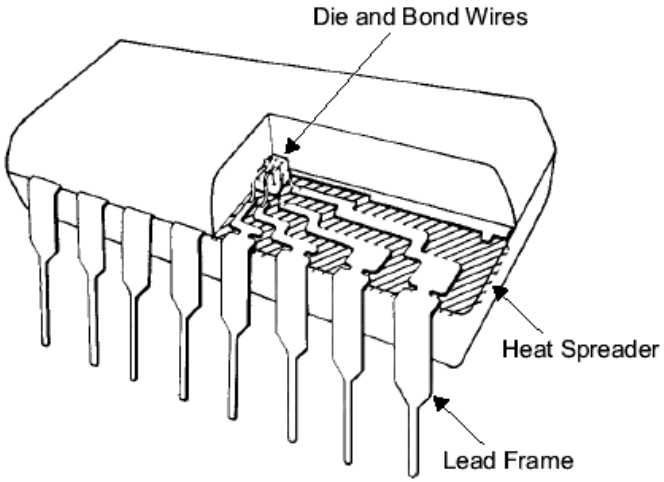

Advanced Packages

- **Bond wires contribute parasitic inductance**
- **Fancy packages have many signal, power layers**
  - Like tiny printed circuit boards
- ***Flip-chip* places connections across surface of die rather than around periphery**
  - Top level metal pads covered with solder balls
  - Chip flips upside down
  - Carefully aligned to package (done blind!)
  - Heated to melt balls
  - Also called *C4* (Controlled Collapse Chip Connection)

Package Parasitics

- **Use many V_{DD}, GND in parallel**
  - **Inductance, I_{DD}**

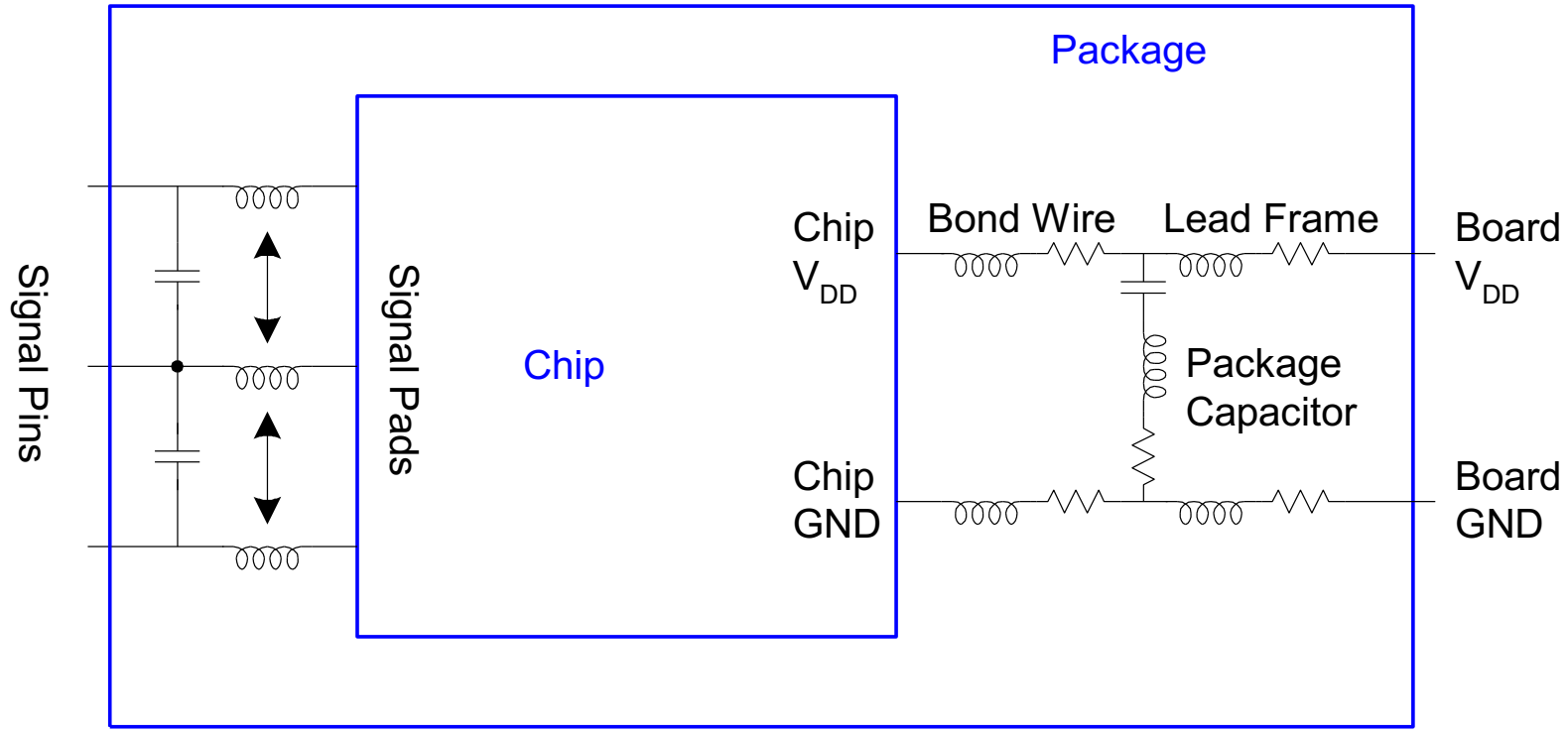

Heat Dissipation

- **60 W light bulb has surface area of 120 cm^2**
- **Itanium 2 die dissipates 130 W over 4 cm^2**
  - Chips have enormous power densities
  - Cooling is a serious challenge
- **Package spreads heat to larger surface area**
  - Heat sinks may increase surface area further
  - Fans increase airflow rate over surface area
  - Liquid cooling used in extreme cases ($$$)

Thermal Resistance

- **$\Delta T = \theta_{ja} P$**
  - ΔT: temperature rise on chip
  - θ_{ja}: thermal resistance of chip junction to ambient
  - P: power dissipation on chip
- **Thermal resistances combine like resistors**
  - Series and parallel
- **$\theta_{ja} = \theta_{jp} + \theta_{pa}$**
  - Series combination

Example

- Your chip has a heat sink with a thermal resistance to the package of 4.0° C/W.
- The resistance from chip to package is 1° C/W.
- The system box ambient temperature may reach 55° C.
- The chip temperature must not exceed 100° C.
- What is the maximum chip power dissipation?

- (100-55 C) / (4 + 1 C/W) = 9 W

Temperature Sensor

- **Monitor die temperature and throttle performance**
- **Use a pair of pnp bipolar transistors**
  - Vertical pnp available in CMOS

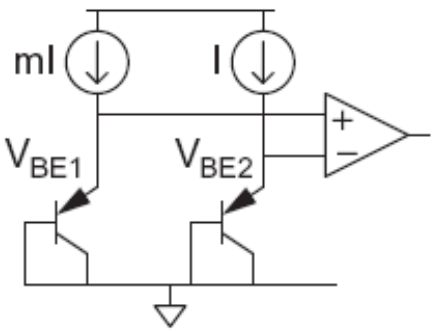

$$I_c = I_s e^{\frac{qV_{BE}}{kT}} \rightarrow V_{BE} = \frac{kT}{q} \ln \frac{I_c}{I_c}$$

$$\Delta V_{BE} = V_{BE1} - V_{BE2} = \frac{kT}{q}\left(\ln \frac{I_{c1}}{I_s} - \ln \frac{I_{c2}}{I_s}\right) = \frac{kT}{q}\left(\ln \frac{I_{c1}}{I_{c2}}\right) = \frac{kT}{q} \ln m$$

- **Voltage difference is proportional to absolute temp**
  - Measure with on-chip A/D converter

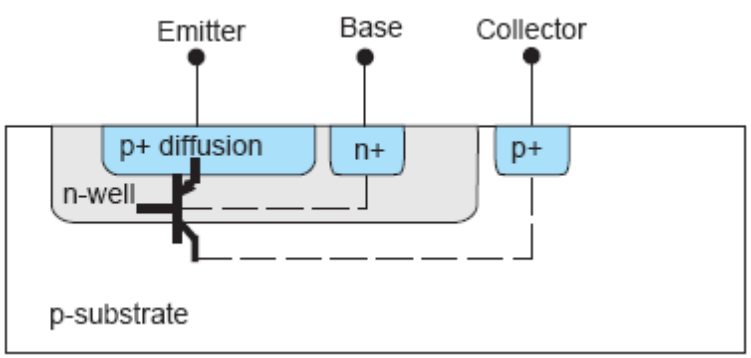

Power Distribution

- **Power Distribution Network functions**
  - Carry current from pads to transistors on chip
  - Maintain stable voltage with low noise
  - Provide average and peak power demands
  - Provide current return paths for signals
  - Avoid electromigration & self-heating wearout
  - Consume little chip area and wire
  - Easy to lay out

IR Drop in Power Distribution Network

- **IR drop:** voltage drop due to non-ideal resistive wires

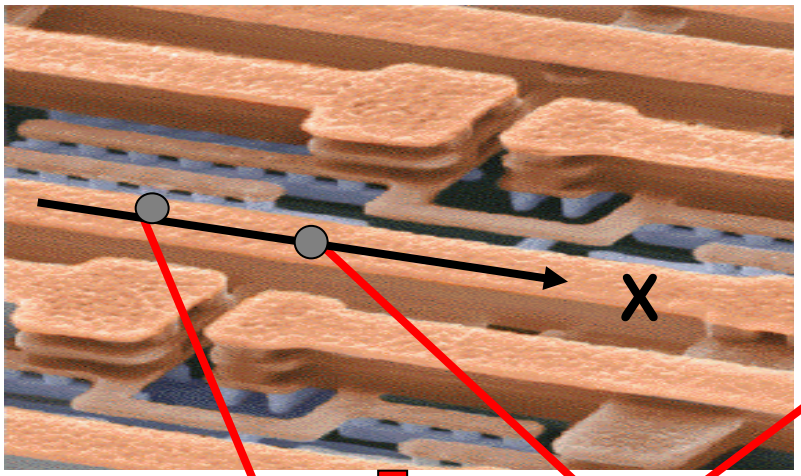

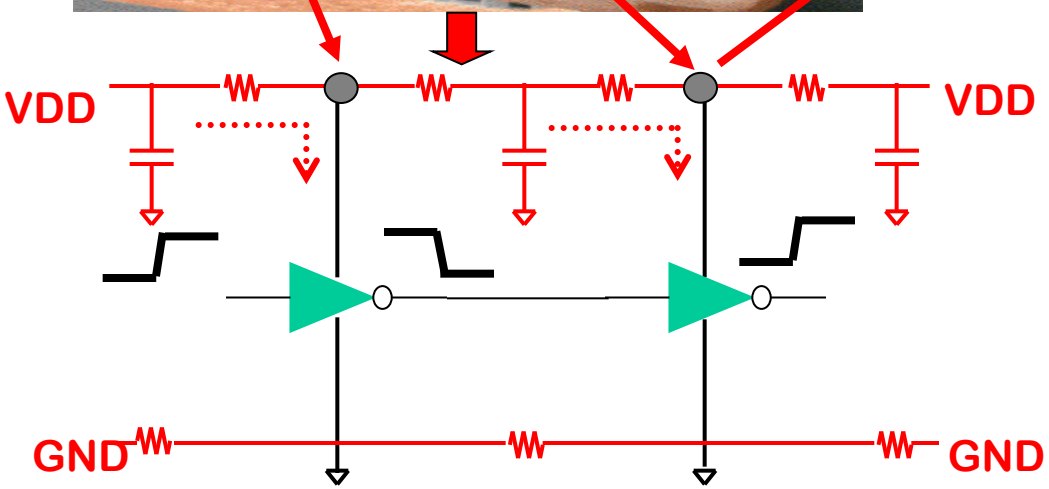

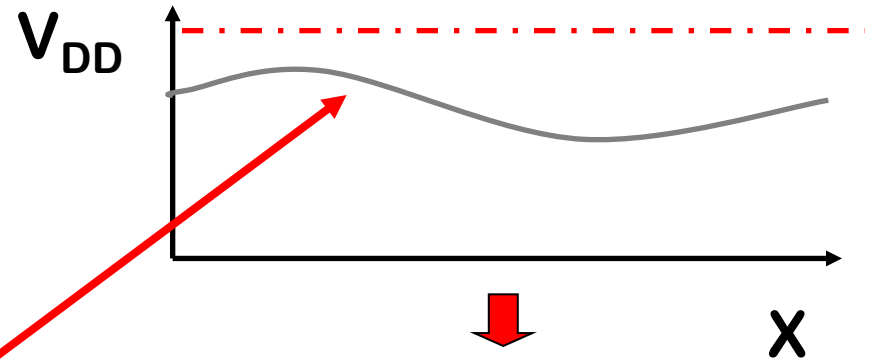

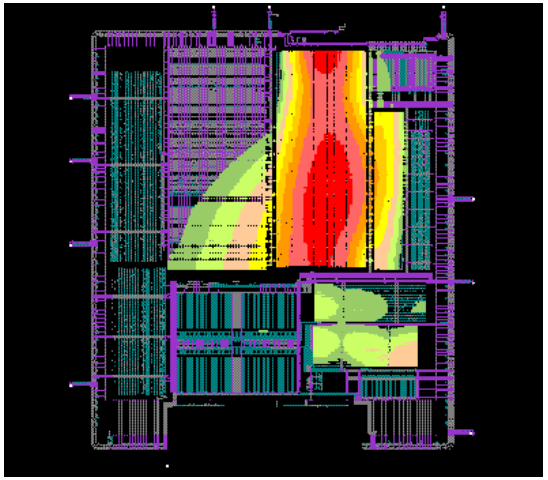

Cadence

Power Delivery Network

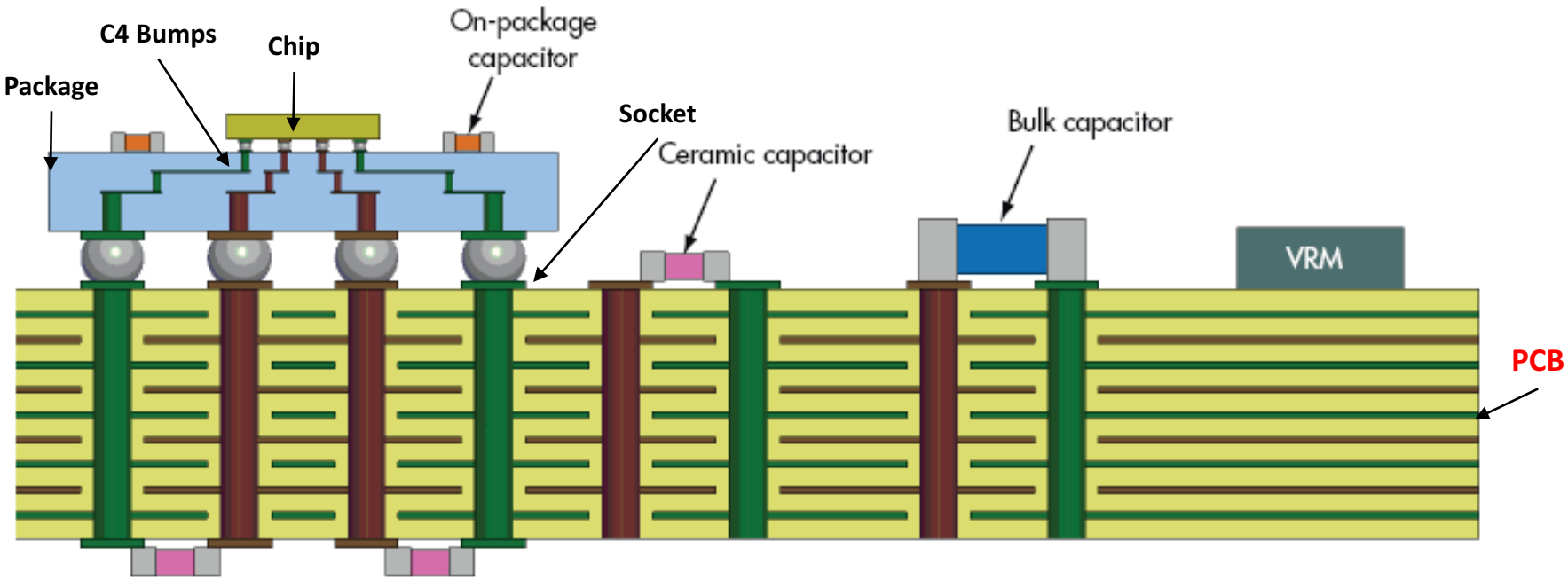

Entire Power Delivery Network

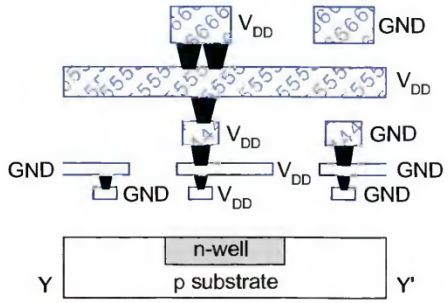

On-Chip Power Delivery Network

Power System Model

- **Power comes from regulator on system board**
  - Board and package add parasitic R and L
  - Bypass capacitors help stabilize supply voltage
  - But capacitors also have parasitic R and L
- **Simulate system for time and frequency responses**

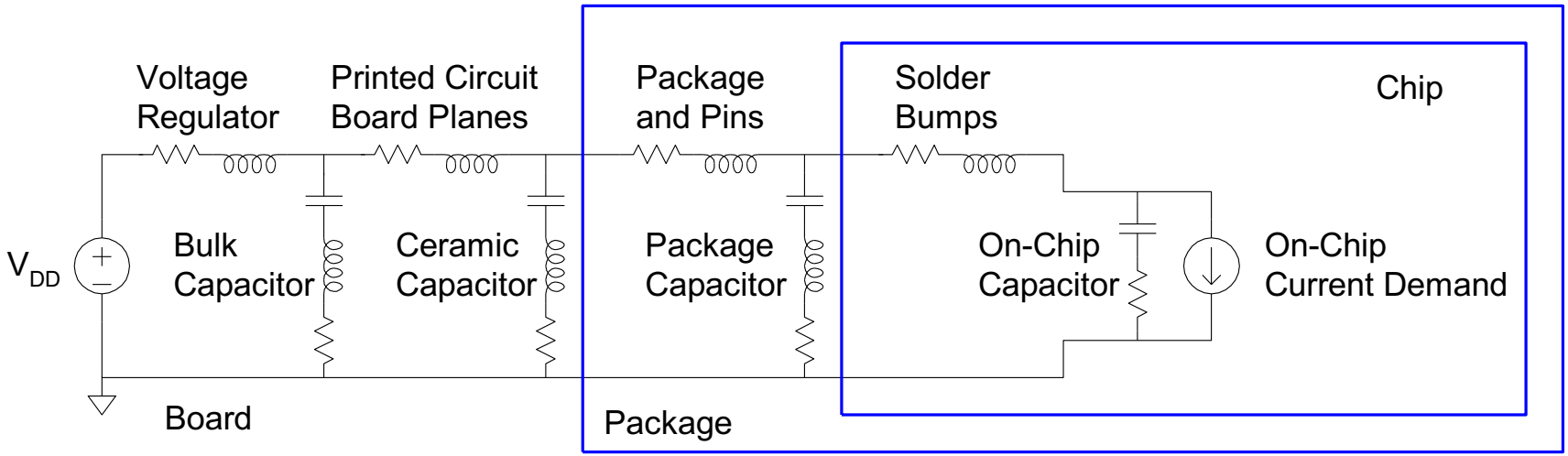

Power Requirements

- $V_{DD} = V_{DDnominal} - V_{droop}$
- Want V_{droop} < +/- 10% of V_{DD}
- Sources of V_{droop}
  - IR drops
  - L di/dt noise
- I_{DD} changes on many time scales

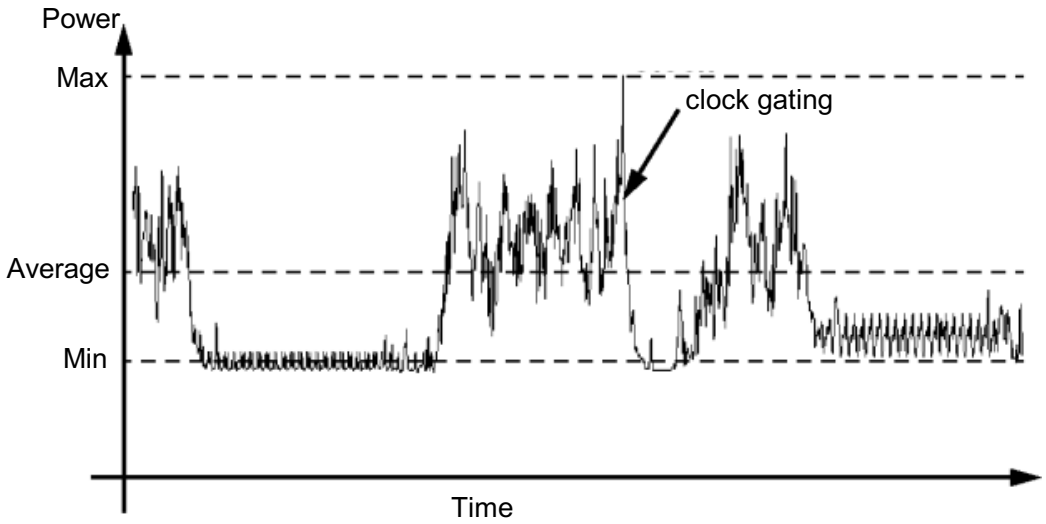

IR Drop

- A chip draws 24 W from a 1.2 V supply. The power supply impedance is 5 mΩ. What is the IR drop?
- I_{DD} = 24 W / 1.2 V = 20 A
- IR drop = (20 A)(5 mΩ) = 100 mV

L di/dt Noise

- **A 1.2 V chip switches from an idle mode consuming 5W to a full-power mode consuming 53 W. The transition takes 10 clock cycles at 1 GHz. The supply inductance is 0.1 nH. What is the L di/dt droop?**

ΔI = (53 W – 5 W)/(1.2 V) = 40 A

Δt = 10 cycles * (1 ns / cycle) = 10 ns

L di/dt droop = (0.1 nH) * (40 A / 10 ns) = 0.4 V

Technology Scaling: Challenges

- **Scaled down supply voltage vs. increased operating frequency and power densities.**
  - Higher percentage of voltage droops.
  - Lower voltage droop tolerance.
- **Shrunk chip area vs. increased gated density.**
  - Less wiring resources.
  - Larger power delivery network dimensions.
- **Fine-grained power management.**
  - Power gating.
  - Multiple power domains.

Frequency Response

- **Multiple capacitors in parallel**
  - Large capacitor near regulator has low impedance at low frequencies
  - But also has a low self-resonant frequency
  - Small capacitors near chip and on chip have low impedance at high frequencies
- **Choose caps to get low impedance at all frequencies**

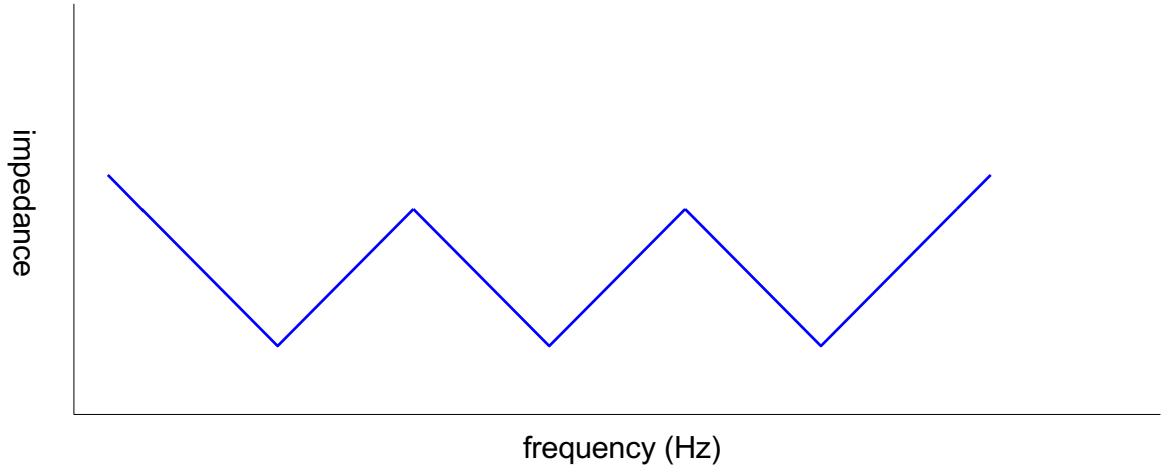

Example: Pentium 4

- **Power supply impedance for Pentium 4**
  - Spike near 100 MHz caused by package L
- **Step response to sudden supply current chain**
  - 1st droop: on-chip bypass caps
  - 2nd droop: package capacitance
  - 3rd droop: board capacitance

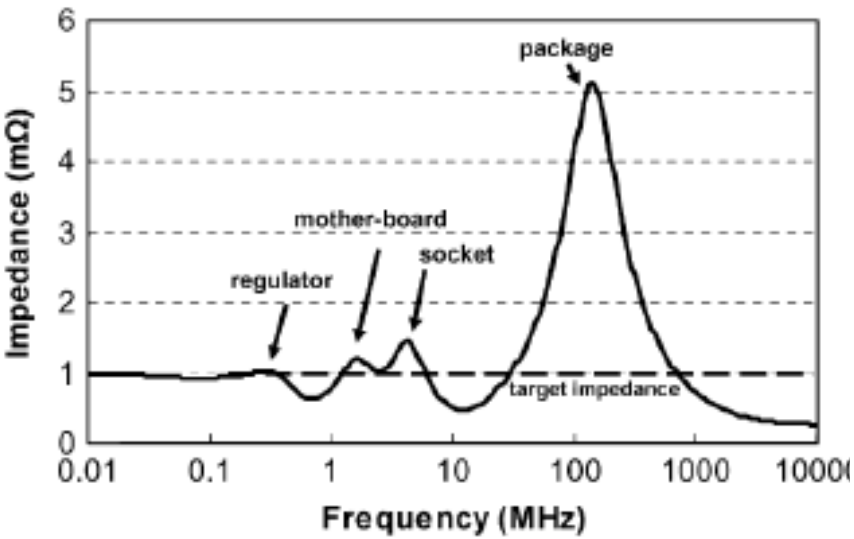

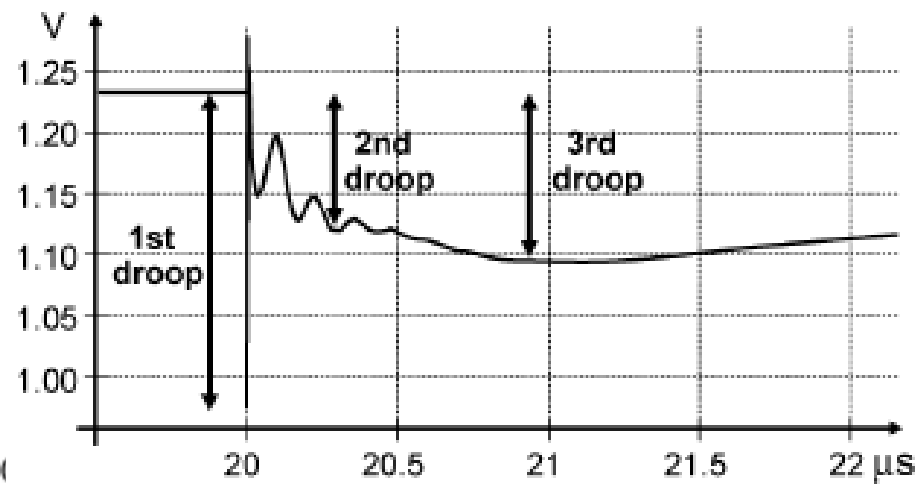

[Wong06]

Clock Distribution

- **On a small chip, the clock distribution network is just a wire**
  - And possibly an inverter for clkb
- **On practical chips, the RC delay of the wire resistance and gate load is very long**
  - Variations in this delay cause clock to get to different elements at different times
  - This is called *clock skew*
- **Most chips use repeaters to buffer the clock and equalize the delay**
  - Reduces but doesn't eliminate skew

Example

- **Skew comes from differences in gate and wire delay**
  - With right buffer sizing, clk_1 and clk_2 could ideally arrive at the same time.
  - But power supply noise changes buffer delays
  - clk_2 and clk_3 will always see RC skew

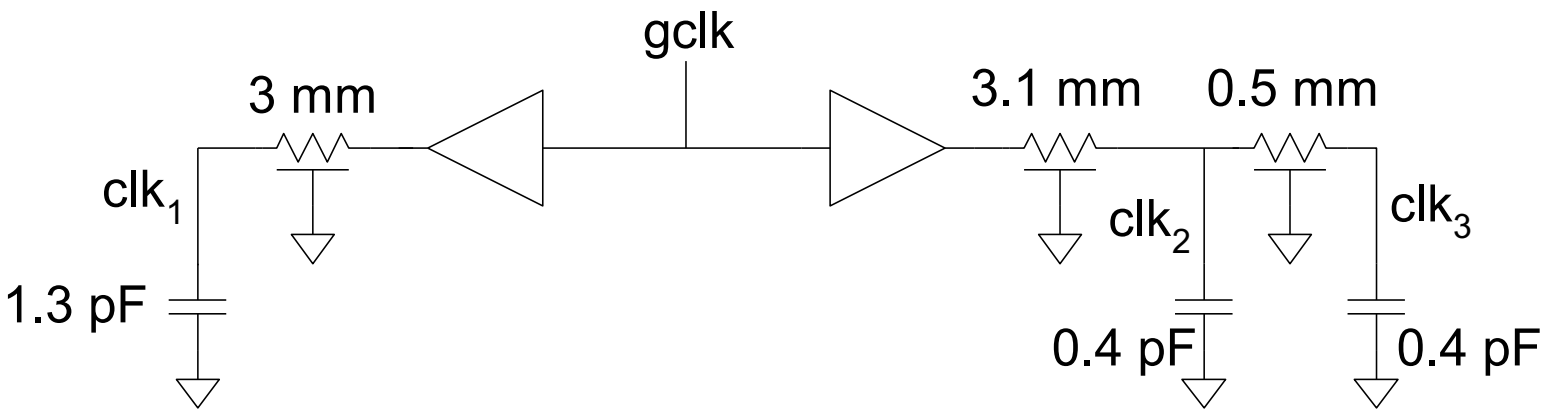

Review: Skew Impact

- **Ideally full cycle is available for work**
- **Skew adds sequencing overhead**
- **Increases hold time too**

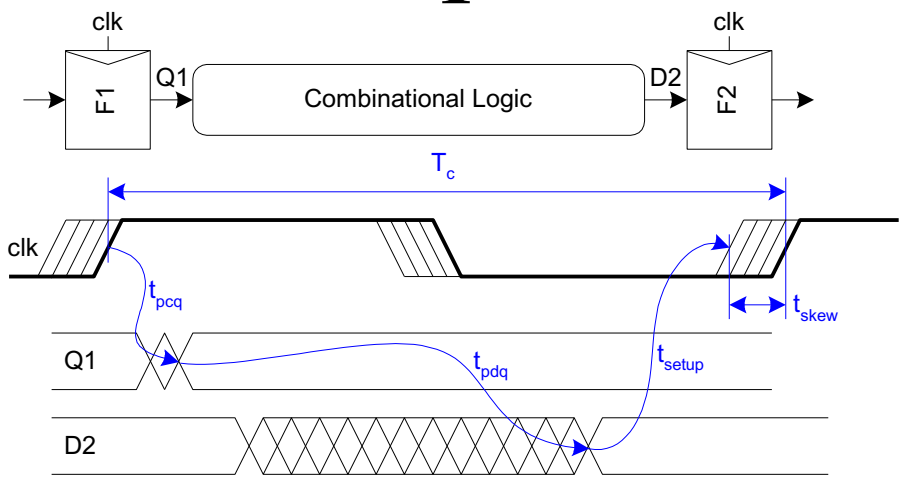

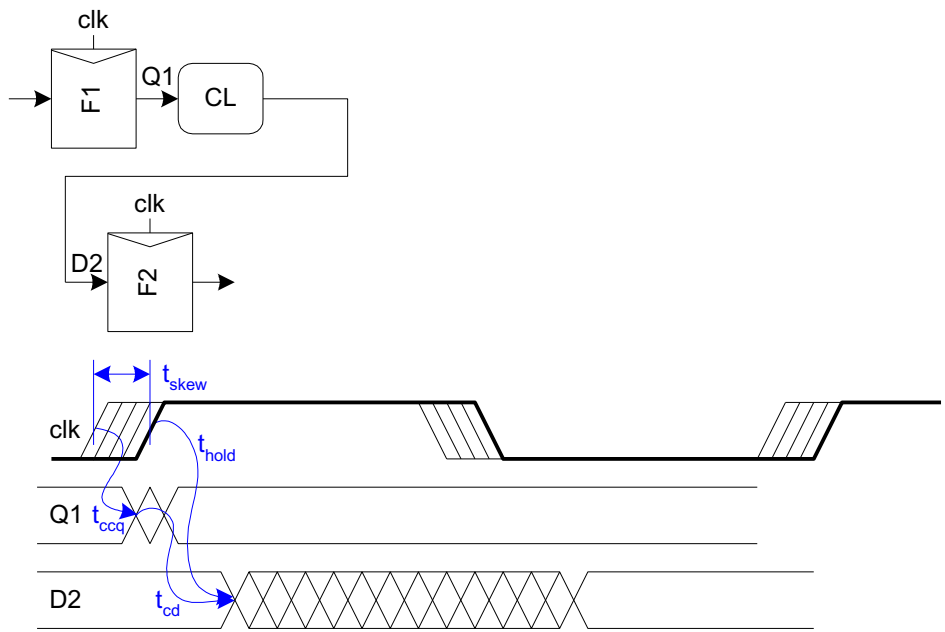

$$t_{pd} \le T_c - \underbrace{\left(t_{pcq} + t_{\text{setup}} + t_{\text{skew}}\right)}_{\text{sequencing overhead}}$$

$$t_{cd} \ge t_{\text{hold}} - t_{ccq} + t_{\text{skew}}$$

Solutions

- **Reduce clock skew**
  - Careful clock distribution network design
  - Plenty of metal wiring resources
- **Analyze clock skew**
  - Only budget actual, not worst case skews
  - Local vs. global skew budgets
- **Tolerate clock skew**
  - Choose circuit structures insensitive to skew

Clock Dist. Networks

- ***Ad hoc***
- **Grids**
- **H-tree**
- **Hybrid**

Clock Grids

- Use grid on two or more levels to carry clock
- Make wires wide to reduce RC delay
- Ensures low skew between nearby points
- But possibly large skew across die

Alpha Clock Grids

Alpha 21064

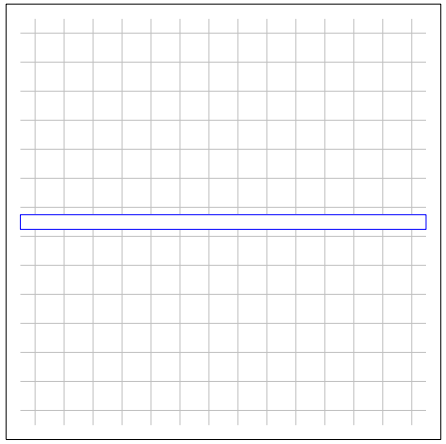

Alpha 21164

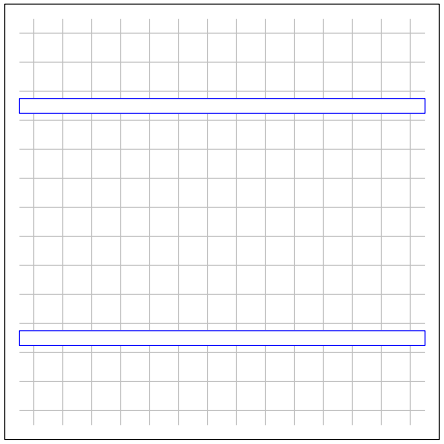

Alpha 21264

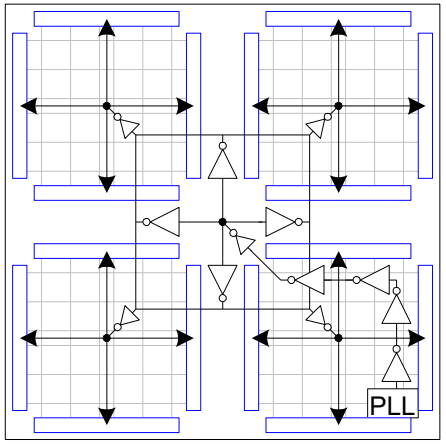

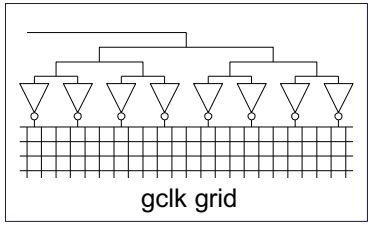

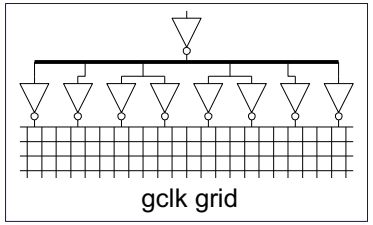

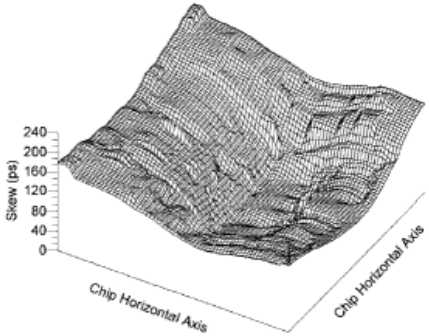

Alpha 21064

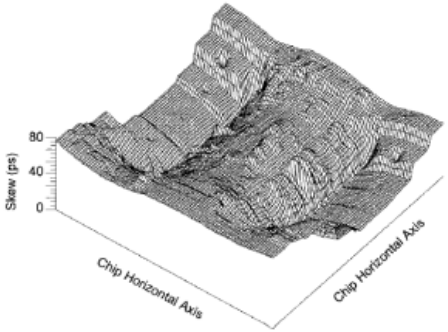

Alpha 21164

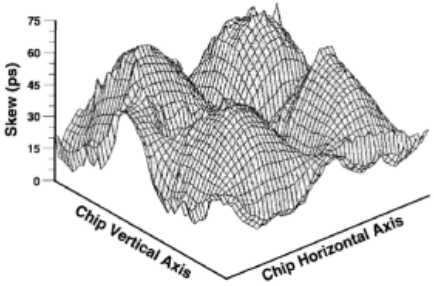

Alpha 21264

H-Trees

- **Fractal structure**
  - Gets clock arbitrarily close to any point
  - Matched delay along all paths
- **Delay variations cause skew**
- **A and B might see big skew**

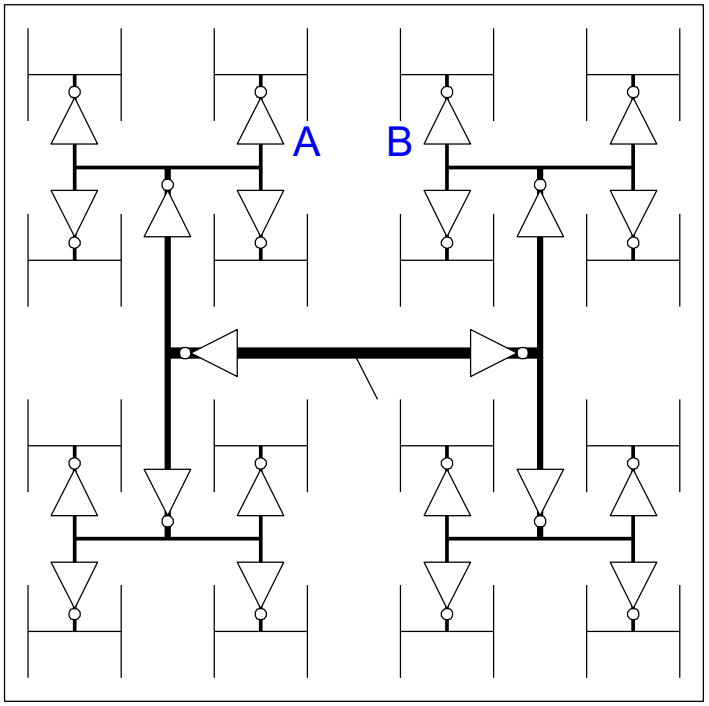

Itanium 2 H-Tree

- **Four levels of buffering:**
  - Primary driver
  - Repeater
  - Second-level clock buffer
  - Gater
- **Route around obstructions**

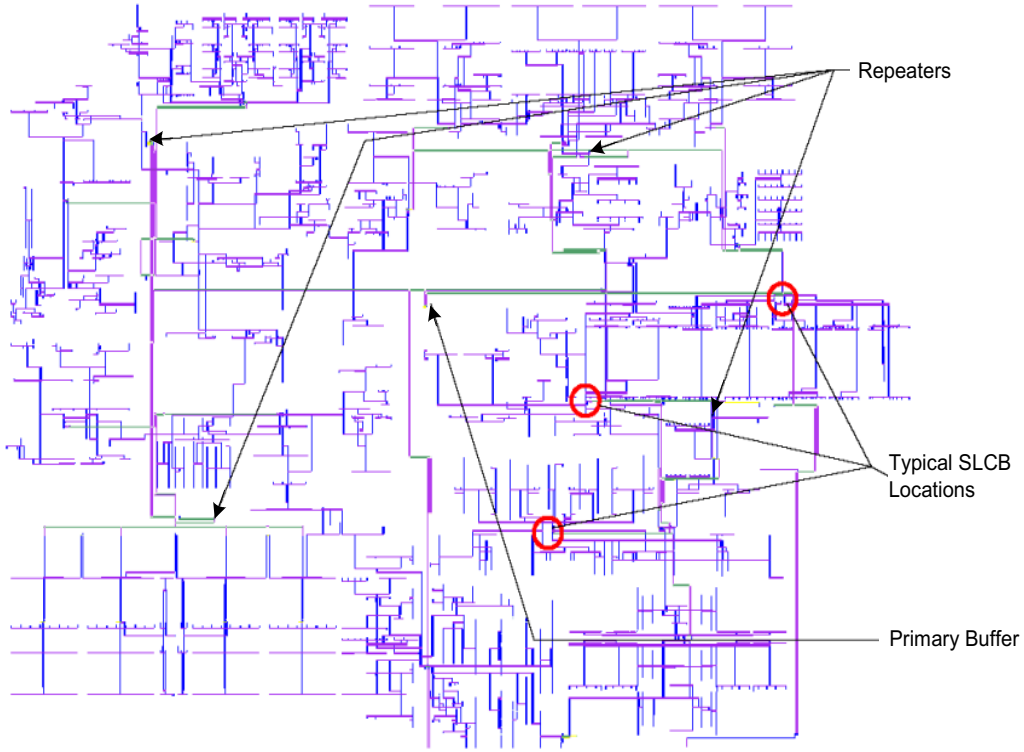

Hybrid Networks

- **Use H-tree to distribute clock to many points**
- **Tie these points together with a grid**

- **Ex: IBM Power4, PowerPC**
  - H-tree drives 16-64 sector buffers
  - Buffers drive total of 1024 points
  - All points shorted together with grid