Introduction to VLSI Design

Lecture 3
MOS Transistor Device Characteristics

Zhuo Feng

Outline

- Introduction
- MOS Capacitor
- NMOS I-V Characteristics
- PMOS I-V Characteristics
- Gate and Diffusion Capacitance
- Nonideal Transistor Behavior
- Process and Environmental Variations

Introduction

- **So far, we have treated transistors as ideal switches**
- **An ON transistor passes a finite amount of current**
  - Depends on terminal voltages
  - Derive current-voltage (I-V) relationships
- **Transistor gate, source, drain all have capacitance**
  - $I = C\,(\Delta V/\Delta t) \rightarrow \Delta t = (C/I)\,\Delta V$
  - Capacitance and current determine speed
- **Also explore what a "degraded level" really means**

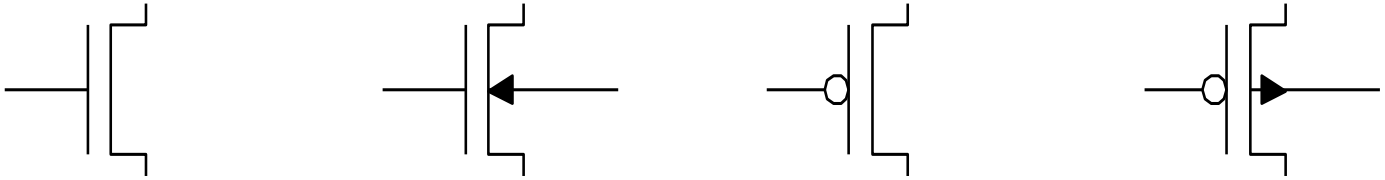

MOS Capacitor

- **Gate and body form MOS capacitor**
- **Operating modes**
  - Accumulation
  - Depletion
  - Inversion

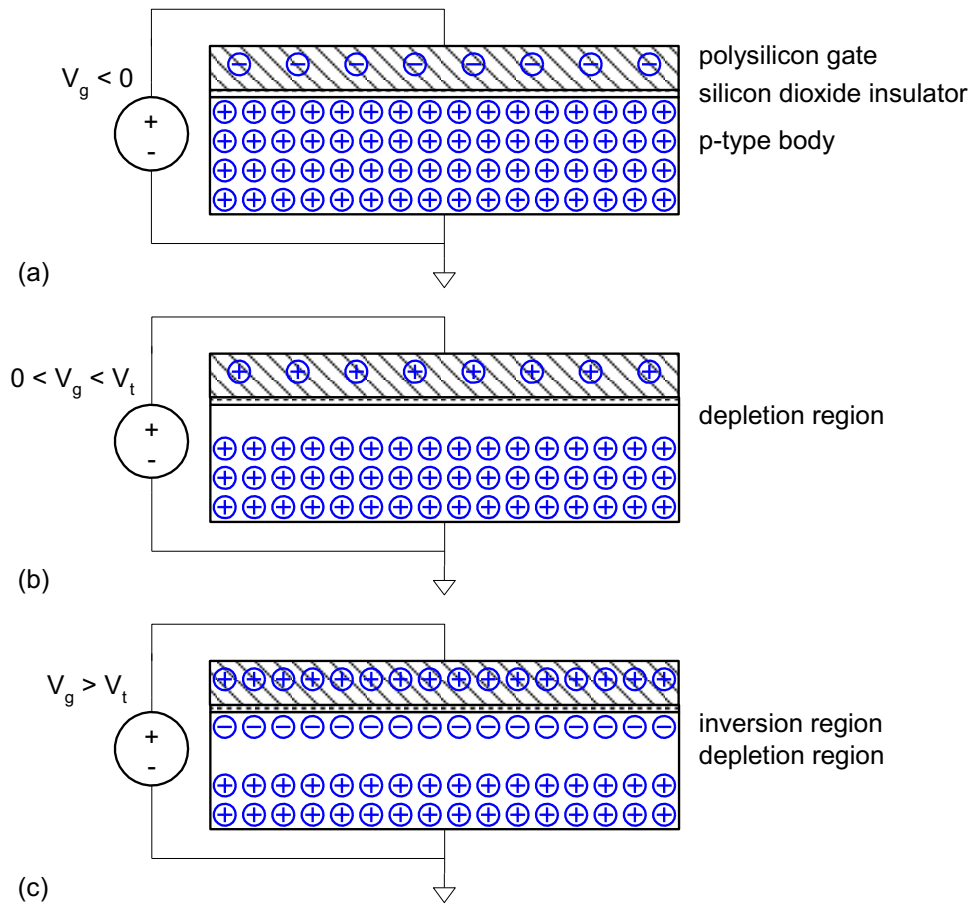

Terminal Voltages

- **Mode of operation depends on V_g, V_d, V_s**
  - $V_{gs} = V_g - V_s$
  - $V_{gd} = V_g - V_d$
  - $V_{ds} = V_d - V_s = V_{gs} - V_{gd}$
- **Source and drain are symmetric diffusion terminals**
  - By convention, source is terminal at lower voltage
  - Hence $V_{ds} \geq 0$
- **NMOS body is grounded. First assume source is 0 too.**
- **Three regions of operation**
  - *Cutoff*
  - *Linear*
  - *Saturation*

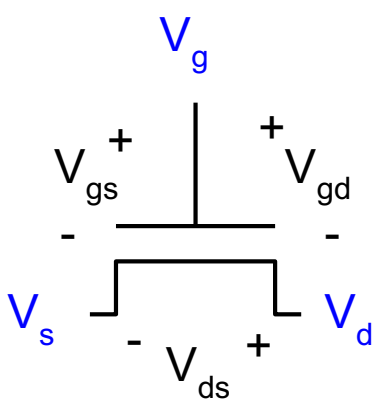

NMOS Cutoff

- **No channel**
- **$I_{ds} = 0$**

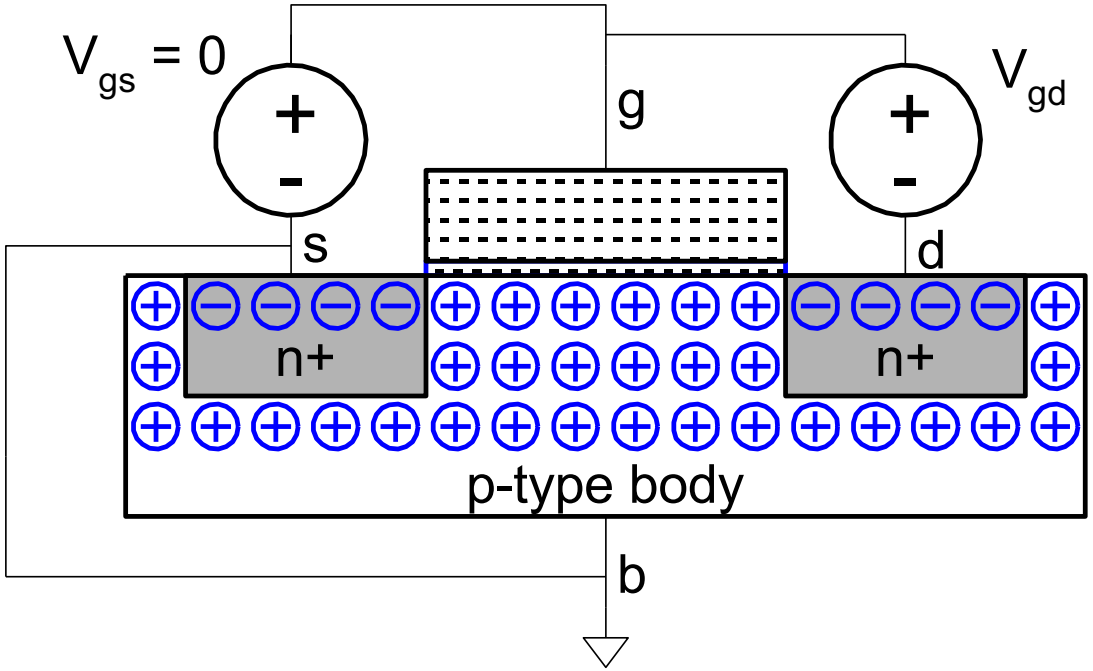

NMOS Linear

- **Channel forms**
- **Current flows from d to s**
  - ► e^- from s to d
- **I_{ds} increases with V_{ds}**
- **Similar to linear resistor**

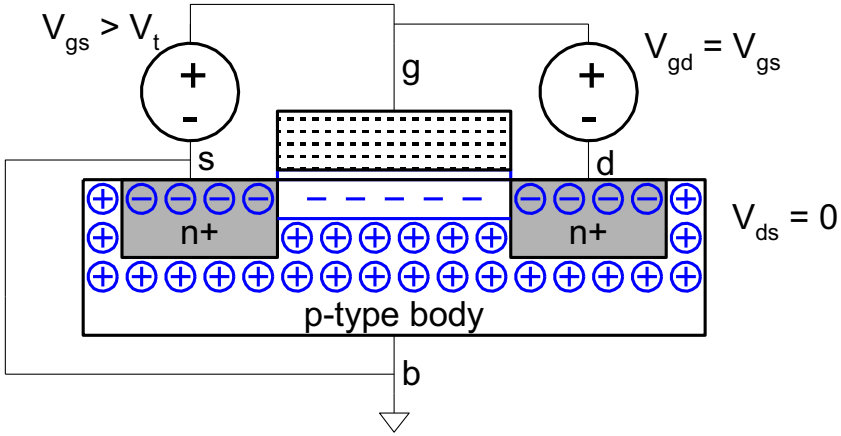

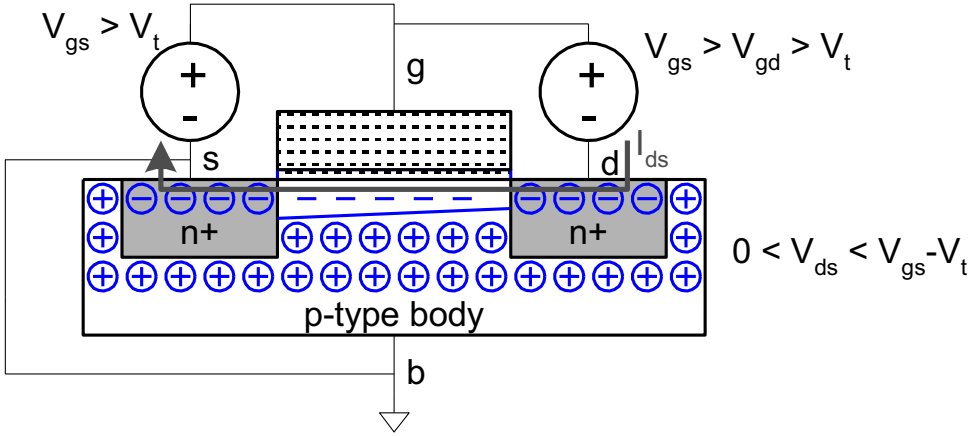

NMOS Saturation

- Channel pinches off
- I_{ds} independent of V_{ds}
- We say current saturates
- Similar to current source

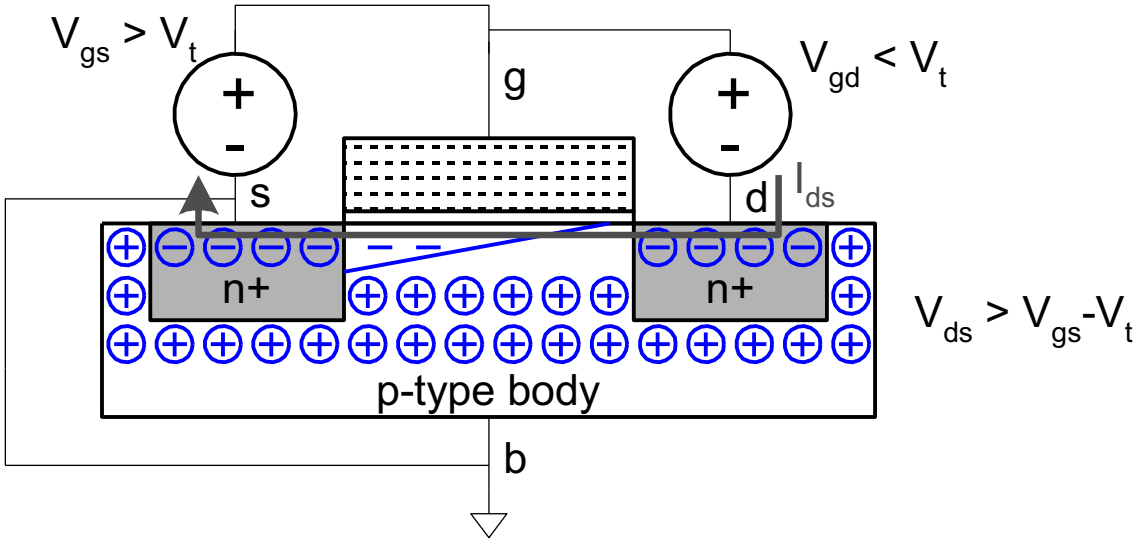

I-V Characteristics

- **In Linear region, I_{ds} depends on**
  - How much charge is in the channel?
  - How fast is the charge moving?

Channel Charge

- **MOS structure looks like parallel plate capacitor while operating in inversion**
  - Gate – oxide – channel
- **$Q_{channel} = CV$**
- **$C = C_g = \varepsilon_{ox}WL/t_{ox} = C_{ox}WL$**
- **$V = V_{gc} - V_t = (V_{gs} - V_{ds}/2) - V_t$**

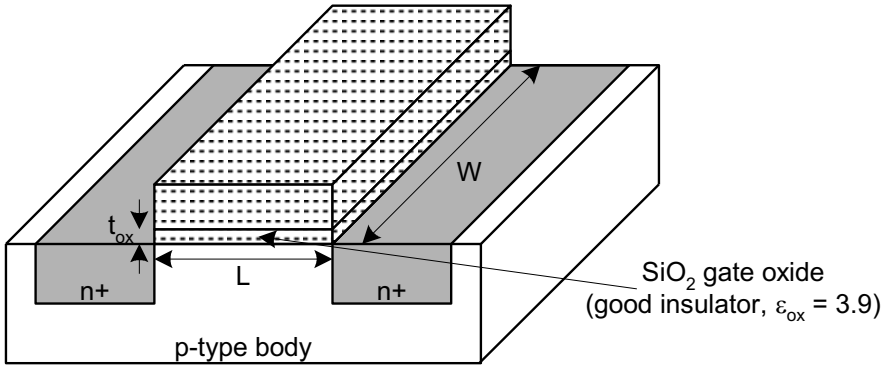

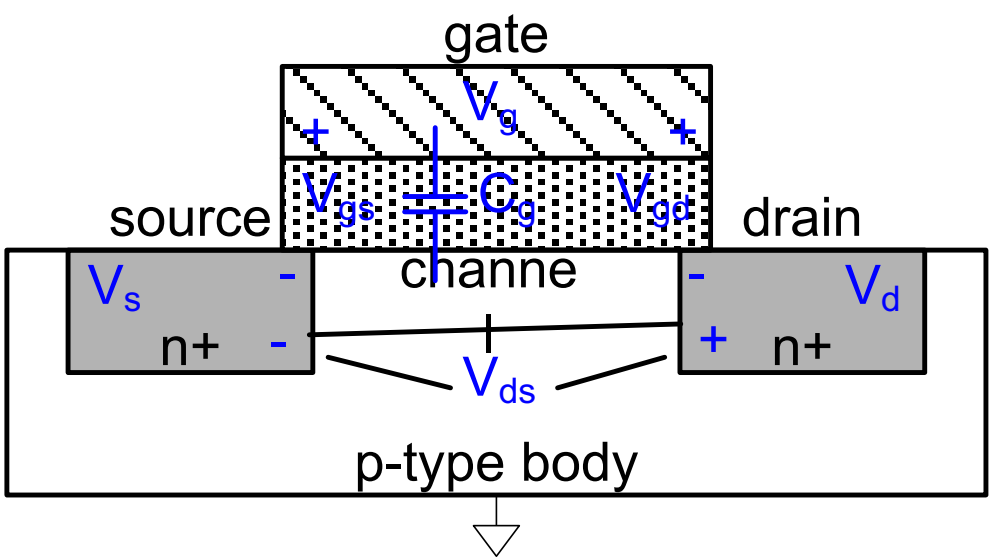

$C_{ox} = \varepsilon_{ox} / t_{ox}$

$V_{gc}=(V_{gs}+V_{gd})/2$
$=V_{gs}-V_{ds}/2$

Carrier velocity

- **Charge is carried by e-**
- **Carrier velocity *v* proportional to lateral E-field between source and drain**
- **$v = \mu E$ (μ is called mobility)**
- **$E = V_{ds}/L$**
- **Time for carrier to cross channel:**
  - $t = L / v$

NMOS Linear I-V

- **Now we know**
  - How much charge $Q_{channel}$ is in the channel
  - How much time *t* each carrier takes to cross

$$I_{ds} = \frac{Q_{\text{channel}}}{t}$$

$$= \mu C_{\text{ox}} \frac{W}{L}\left(V_{gs} - V_t - {V_{ds}}/{2}\right)V_{ds} \qquad \beta = \mu C_{\text{ox}} \frac{W}{L}$$

$$= \beta\left(V_{gs} - V_t - {V_{ds}}/{2}\right)V_{ds}$$

NMOS Saturation I-V

- **If $V_{gd} < V_t$, channel pinches off near drain**
  - When $V_{ds} > V_{dsat} = V_{gs} - V_t$
- **Now drain voltage no longer increases current**

$$I_{ds} = \beta\left(V_{gs} - V_t - V_{dsat}/2\right)V_{dsat}$$

$$= \frac{\beta}{2}\left(V_{gs} - V_t\right)^2$$

NMOS I-V Summary

- ***Shockley*** **1st order transistor models (long-channel)**

$$I_{ds} = \begin{cases} 0 & V_{gs} < V_t \quad \text{cutoff} \\ \beta\left(V_{gs} - V_t - V_{ds}/2\right)V_{ds} & V_{ds} < V_{dsat} \quad \text{linear} \\ \frac{\beta}{2}\left(V_{gs} - V_t\right)^2 & V_{ds} > V_{dsat} \quad \text{saturation} \end{cases}$$

Example

- **We consider a 0.6 μm process**
  - From AMI Semiconductor
  - t_{ox} = 100 Å
  - μ = 350 $cm^2/V*s$
  - V_t = 0.7 V
- **Plot I_{ds} vs. V_{ds}**
  - V_{gs} = 0, 1, 2, 3, 4, 5
  - Use W/L = 4/2 λ

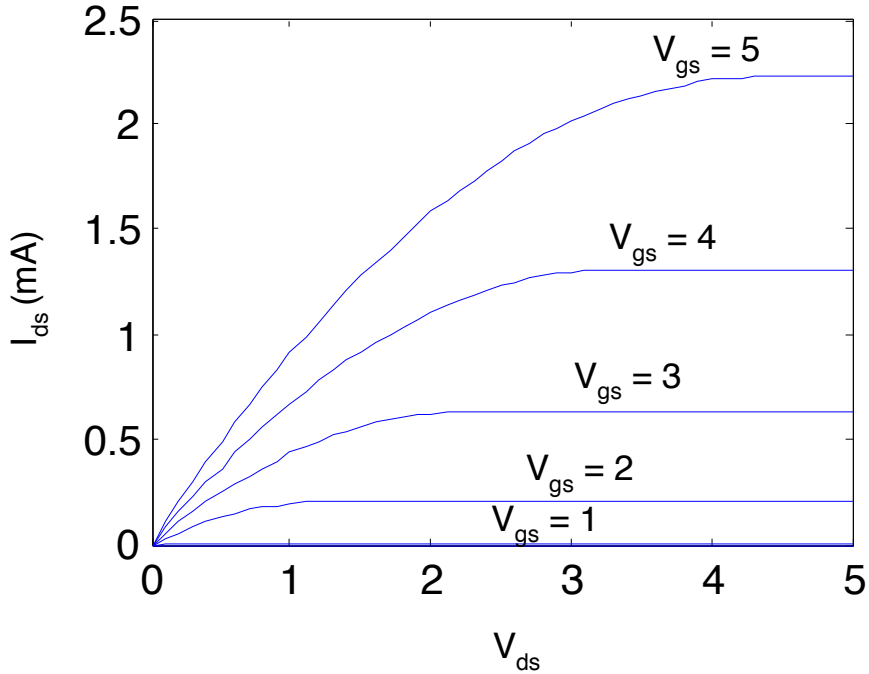

$$\beta = \mu C_{ox}\frac{W}{L} = (350)\left(\frac{3.9 \bullet 8.85 \cdot 10^{-14}}{100 \cdot 10^{-8}}\right)\left(\frac{W}{L}\right) = 120\frac{W}{L}\mu A/V^2$$

PMOS I-V

- **All dopings and voltages are inverted for PMOS**
- **Mobility μ_p is determined by holes**
  - Typically 2-3x lower than that of electrons μ_n
  - 120 $cm^2/V*s$ in AMI 0.6 μm process
- **Thus PMOS must be wider to provide same current**
  - In this class, assume $\mu_n / \mu_p = 2$
  - *** plot I-V here

Capacitance

- **Any two conductors separated by an insulator have capacitance**
- **Gate to channel capacitor is very important**
  - Creates channel charge necessary for operation
- **Source and drain have capacitance to body**
  - Across reverse-biased diodes
  - Called diffusion capacitance because it is associated with source/drain diffusion

Gate Capacitance

- Approximate channel as connected to source
- $C_{gs} = \varepsilon_{ox}WL/t_{ox} = C_{ox}WL = C_{permicron}W$ (minimum L)
- $C_{permicron}$ is typically about 2 fF/μm

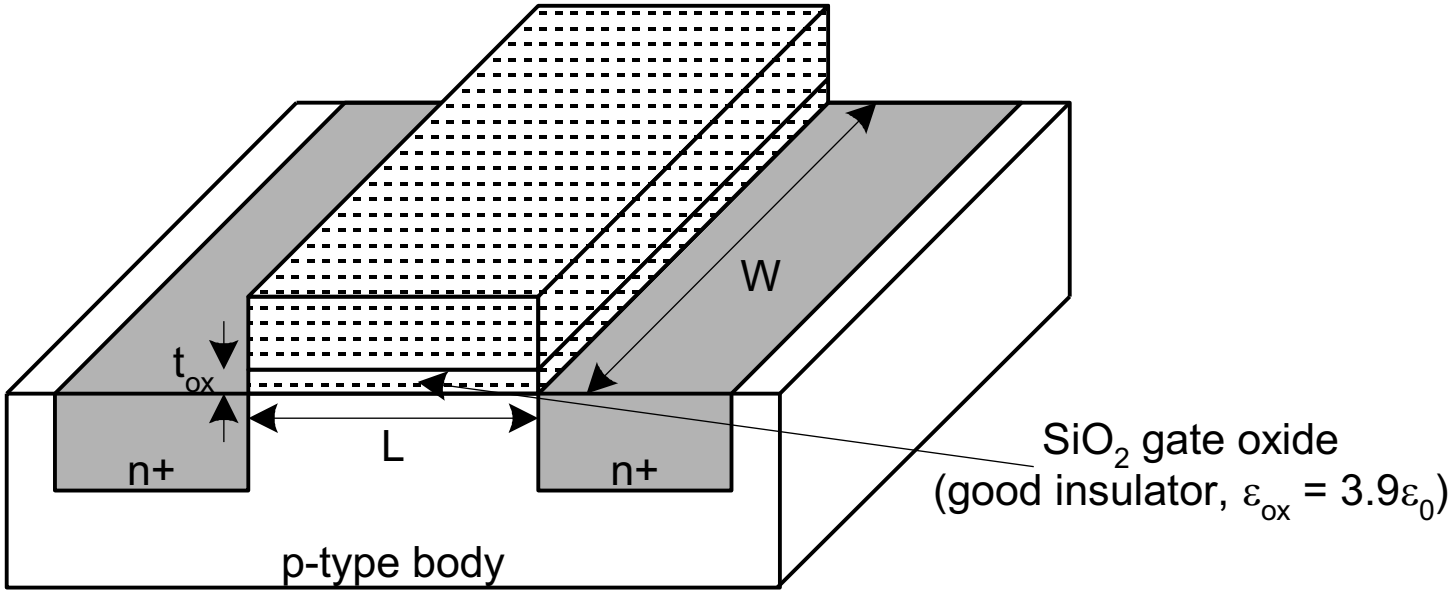

Diffusion Capacitance

- C_{sb}, C_{db}
- **Undesirable, called *parasitic* capacitance**
- **Capacitance depends on area and perimeter**
  - Use small diffusion nodes
  - Comparable to C_g for contacted diff
  - ½ C_g for uncontacted
  - Varies with process

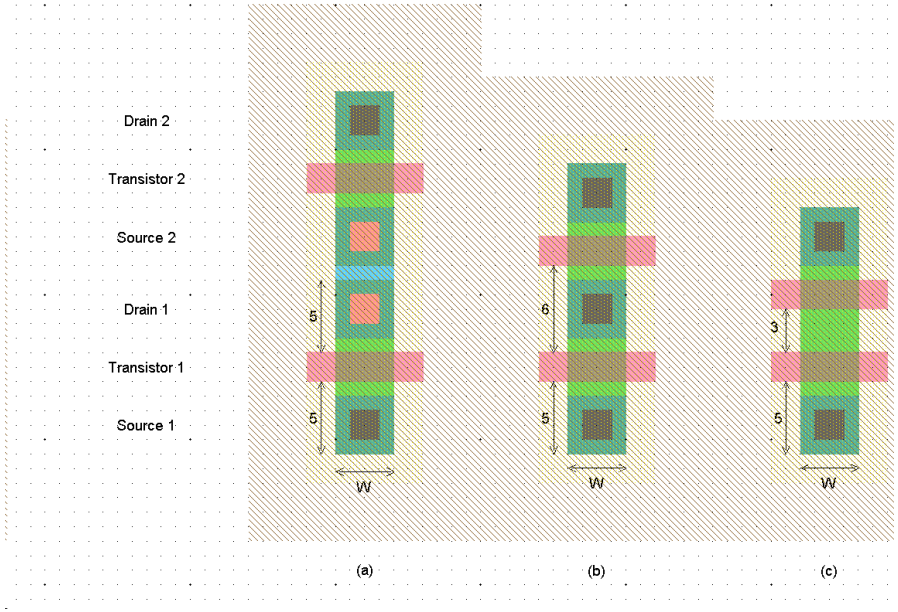

Ideal vs. Simulated nMOS I-V Plot

- **65 nm IBM process, V_{DD} = 1.0 V**

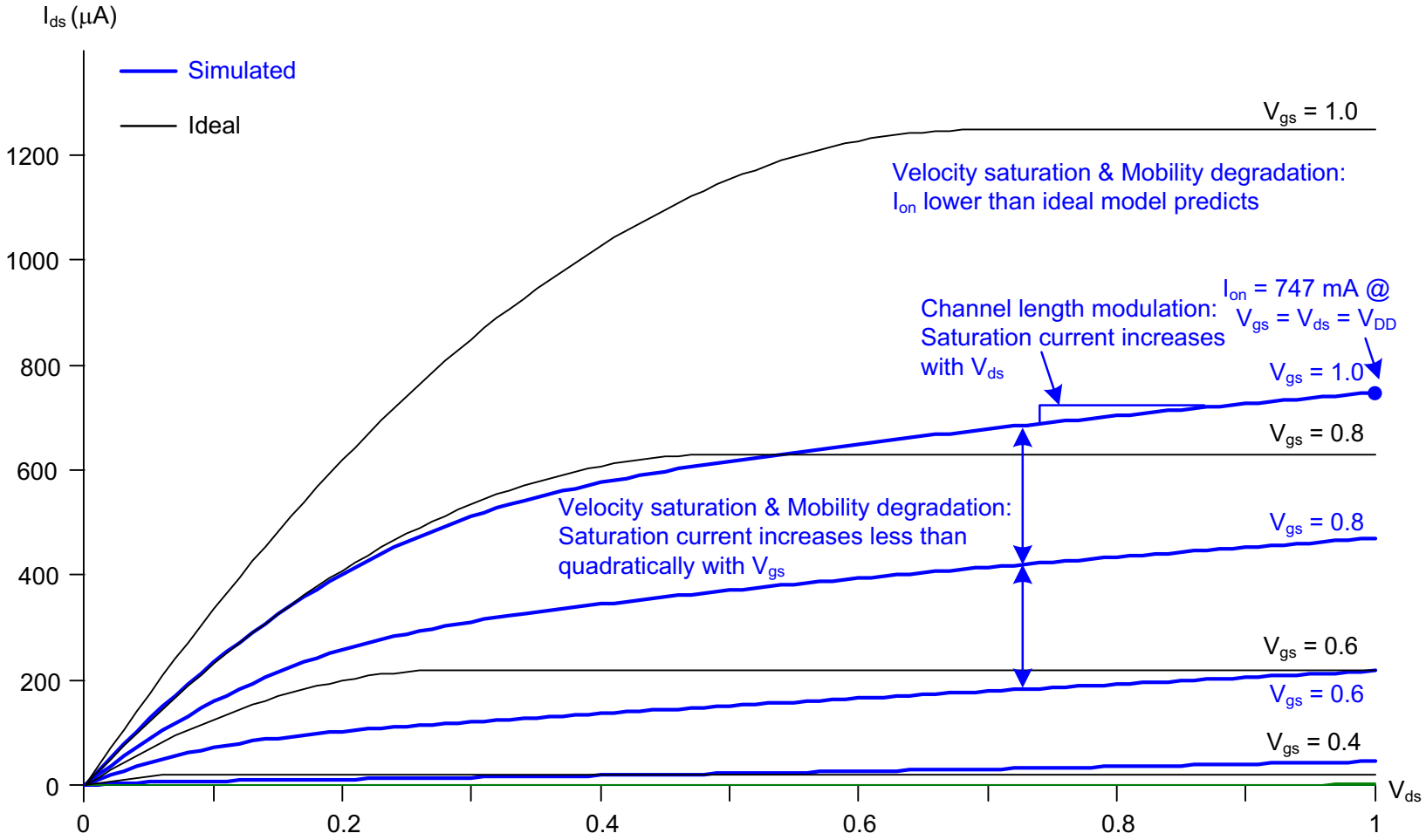

Electric Fields Effects

- **Vertical electric field: $E_{vert} = V_{gs} / t_{ox}$**
  - Attracts carriers into channel
  - Long channel: $Q_{channel} \propto E_{vert}$
- **Lateral electric field: $E_{lat} = V_{ds} / L$**
  - Accelerates carriers from drain to source
  - Long channel: $v = \mu E_{lat}$

Mobility Degradation

- **High E_{vert} effectively reduces mobility**
  - Collisions with oxide interface

$$\mu_{\text{eff}-n} = \frac{540\,\frac{\text{cm}^2}{\text{V}\cdot\text{s}}}{1+\left(\frac{V_{gs}+V_t}{0.54\,\frac{\text{V}}{\text{nm}}\,t_{\text{ox}}}\right)^{1.85}} \qquad \mu_{\text{eff}-p} = \frac{185\,\frac{\text{cm}^2}{\text{V}\cdot\text{s}}}{1+\frac{\left|V_{gs}+1.5V_t\right|}{0.338\,\frac{\text{V}}{\text{nm}}\,t_{\text{ox}}}}$$

Channel Length Modulation

- **Reverse-biased p-n junctions form a *depletion region***
  - Region between n and p with no carriers
  - Width of depletion L_d region grows with reverse bias
  - $L_{eff} = L - L_d$
- **Shorter L_{eff} gives more current**
  - I_{ds} increases with V_{ds}
  - Even in saturation

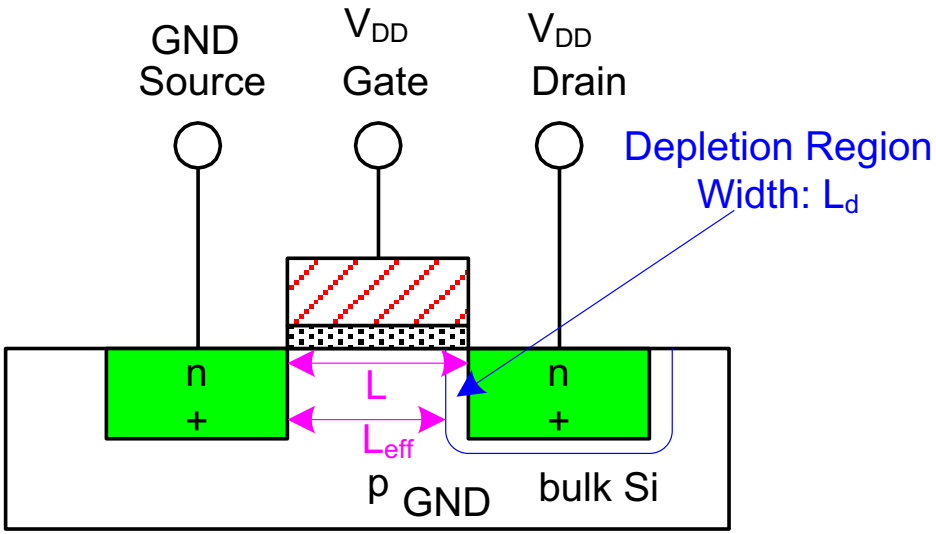

Channel Length Modulation

$$I_{ds} = \frac{\beta}{2}\left(V_{gs} - V_t\right)^2 \left(1 + \lambda V_{ds}\right)$$

- λ = ***channel length modulation coefficient***
  - not feature size
  - Empirically fit to I-V characteristics

Leakage

- **What about current in cutoff?**
- **Simulated results**
- **What differs?**
  - Current doesn't go to 0 in cutoff

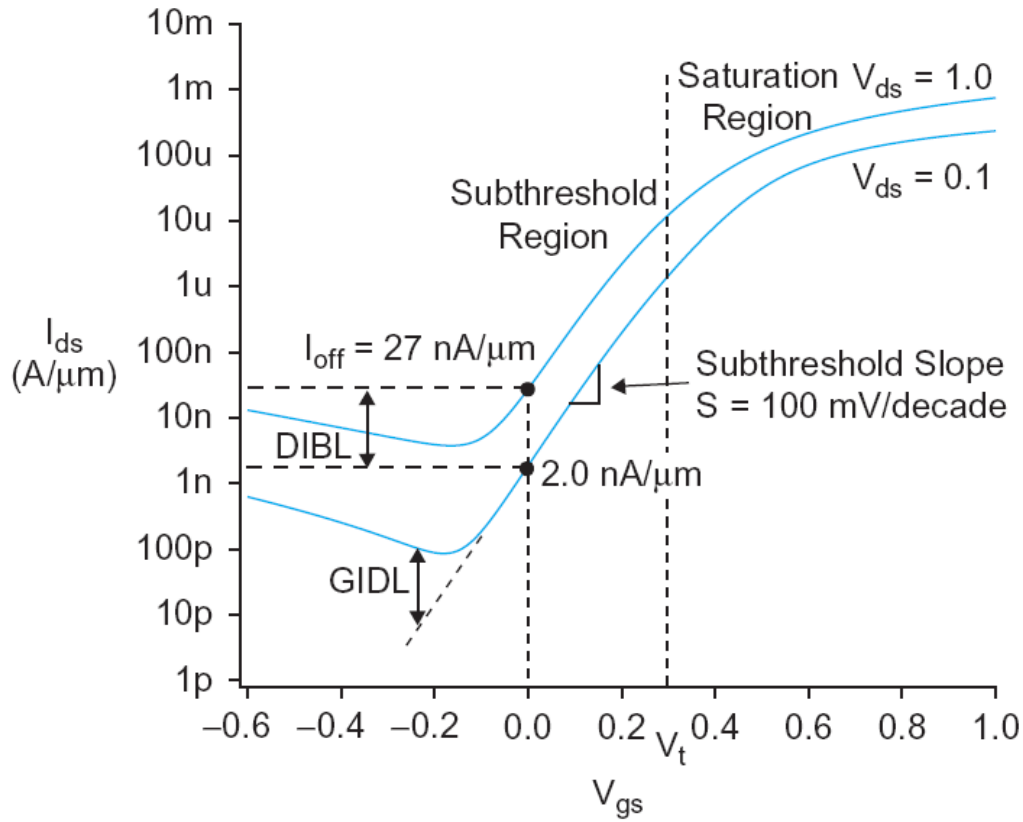

Leakage Sources

- **Subthreshold conduction**
  - Transistors can’t abruptly turn ON or OFF
  - Dominant source in contemporary transistors
- **Gate leakage**
  - Tunneling through ultrathin gate dielectric
- **Junction leakage**
  - Reverse-biased PN junction diode current

Subthreshold Leakage

- **Subthreshold leakage exponential with V_{gs}**

$$I_{ds} = I_{ds0} e^{\frac{V_{gs} - V_{t0} + \eta V_{ds} - k_\gamma V_{sb}}{n v_T}} \left(1 - e^{\frac{-V_{ds}}{v_T}} \right)$$

- **n is process dependent**
  - ► typically 1.3-1.7
- **Rewrite relative to I_{off} on log scale**

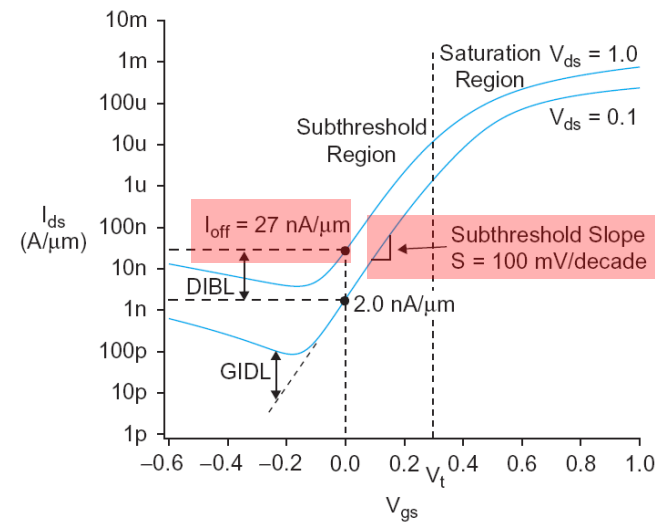

$$I_{ds} = I_{off} 10^{\frac{V_{gs} + \eta (V_{ds} - V_{dd}) - k\gamma V_{sb}}{S}} \left(1 - e^{\frac{-V_{ds}}{v_t}} \right)$$

$$S = \left[\frac{d(\log_{10} I_{ds})}{dV_{gs}} \right]^{-1} = n v_T \ln 10$$

- **S ≈ 100 mV/decade @ room temperature**

Gate Leakage

- **Carriers tunnel through very thin gate oxides**
- **Exponentially sensitive to t_{ox} and V_{DD}**

$$I_{gate} = WA\left(\frac{V_{DD}}{t_{ox}}\right)^2 e^{-B\frac{t_{ox}}{V_{DD}}}$$

  - A and B are tech constants
  - Greater for electrons
    - So nMOS gates leak more

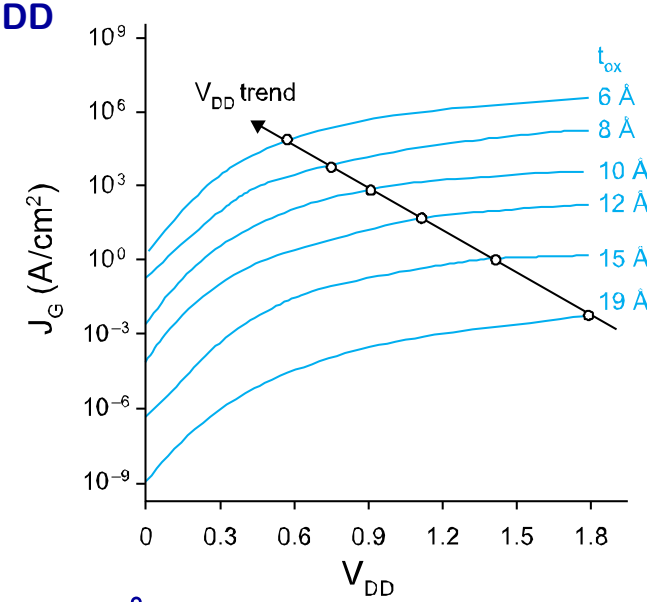

- **Negligible for older processes (t_{ox} > 20 Å)**
- **Critically important at 65 nm and below ($t_{ox} \approx$ 10.5 Å)**

From [Song01]

Junction Leakage

- **Reverse-biased p-n junctions have some leakage**
  - Ordinary diode leakage
  - Band-to-band tunneling (BTBT)
  - Gate-induced drain leakage (GIDL)

$$I_D = I_S\left(e^{\frac{V_D}{v_T}} - 1\right)$$

- **I_s depends on doping levels**
  - And area and perimeter of diffusion regions
  - Typically < 1 fA/μm^2 (negligible)

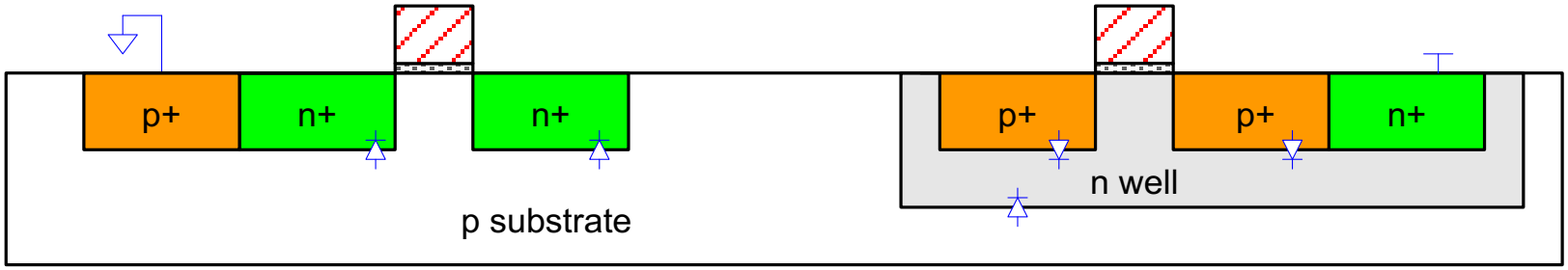

Temperature Sensitivity

- **Increasing temperature**
  - Reduces mobility
  - Reduces V_t
- **I_{ON} decreases with temperature**
- **I_{OFF} increases with temperature**

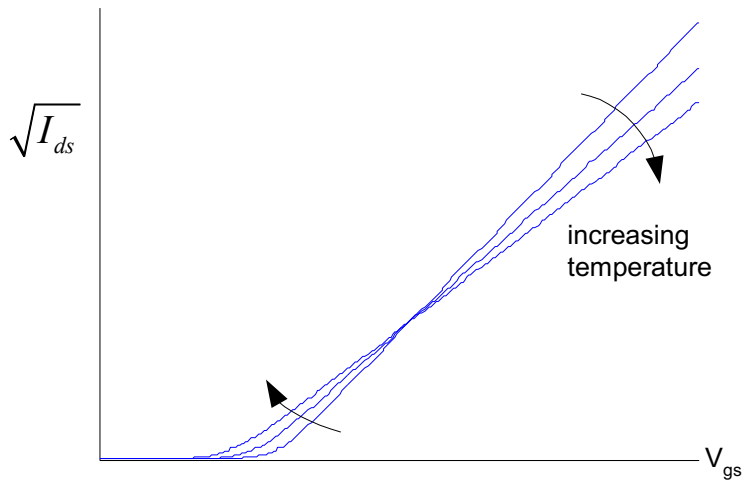

So What?

- **So what if transistors are not ideal?**
  - They still behave like switches.
- **But these effects matter for…**
  - Supply voltage choice
  - Logical effort
  - Quiescent power consumption
  - Pass transistors
  - Temperature of operation

Parameter Variation

- **Transistors have uncertainty in parameters**
  - Process: L_{eff}, V_t, t_{ox} of nMOS and pMOS
  - Vary around typical (T) values
- **Fast (F)**
  - L_{eff}: short
  - V_t: low
  - t_{ox}: thin
- **Slow (S): opposite**
- **Not all parameters are independent for nMOS and pMOS**

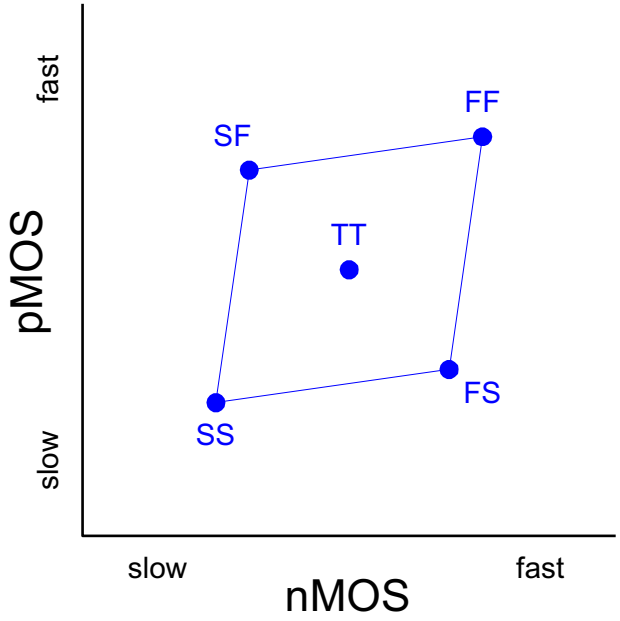

Environmental Variation

- **V_{DD} and T also vary in time and space**
- **Fast:**
  - V_{DD}: high
  - T: low

Corner	Voltage	Temperature
F	1.98	0 C
T	1.8	70 C
S	1.62	125 C

Process Corners

- **Process corners describe worst case variations**
  - If a design works in all corners, it will probably work for any variation.
- **Describe corner with four letters (T, F, S)**
  - nMOS speed
  - pMOS speed
  - Voltage
  - Temperature

Important Corners

- **Some critical simulation corners include**

Purpose	**nMOS**	**pMOS**	**V_{DD}**	**Temp**
Cycle time	S	S	S	S
Power	F	F	F	F
Subthreshold leakage	F	F	F	S