Introduction to VLSI Design

Lecture 4
DC and Transient Responses, Circuit Delays

Zhuo Feng

Outline

- Pass Transistors
- DC Response
- Logic Levels and Noise Margins
- Transient Response
- RC Delay Models
- Delay Estimation

Activity

1) If the width of a transistor increases, the current will

increase decrease not change

2) If the length of a transistor increases, the current will

increase decrease not change

3) If the supply voltage of a chip increases, the maximum transistor current will

increase decrease not change

4) If the width of a transistor increases, its gate capacitance will

increase decrease not change

5) If the length of a transistor increases, its gate capacitance will

increase decrease not change

6) If the supply voltage of a chip increases, the gate capacitance of each transistor will

increase decrease not change

Activity

1) If the width of a transistor increases, the current will

increase decrease not change

2) If the length of a transistor increases, the current will

increase decrease not change

3) If the supply voltage of a chip increases, the maximum transistor current will

increase decrease not change

4) If the width of a transistor increases, its gate capacitance will

increase decrease not change

5) If the length of a transistor increases, its gate capacitance will

increase decrease not change

6) If the supply voltage of a chip increases, the gate capacitance of each transistor will

increase decrease not change

Signal Strength

- ***Strength* of signal**
  - How close it approximates ideal voltage source
- **V_{DD} and GND rails are strongest 1 and 0**
- **NMOS pass strong 0**
  - But degraded or weak 1(the high voltage is less than VDD)
- **PMOS pass strong 1**
  - But degraded or weak 0
- **Thus nMOS are best for pull-down network**

Pass Transistors

- **We have assumed source is grounded**
- **What if source > 0?**
  - e.g. pass transistor passing V_{DD}
- **$V_g = V_{DD}$**
  - If $V_s > V_{DD}-V_t$, $V_{gs} < V_t$
  - Hence transistor would turn itself off
- **NMOS pass transistors pull no higher than $V_{DD}-V_{tn}$**
  - Called a degraded "1"
  - Approach degraded value slowly (low I_{ds})
- **PMOS pass transistors pull no lower than V_{tp}**

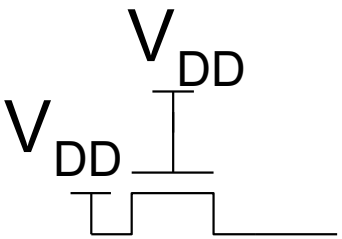

Pass Transistors

- **Transistors can be used as switches**
  - *Pass transistor*: NMOS or PMOS is used alone as an imperfect switch

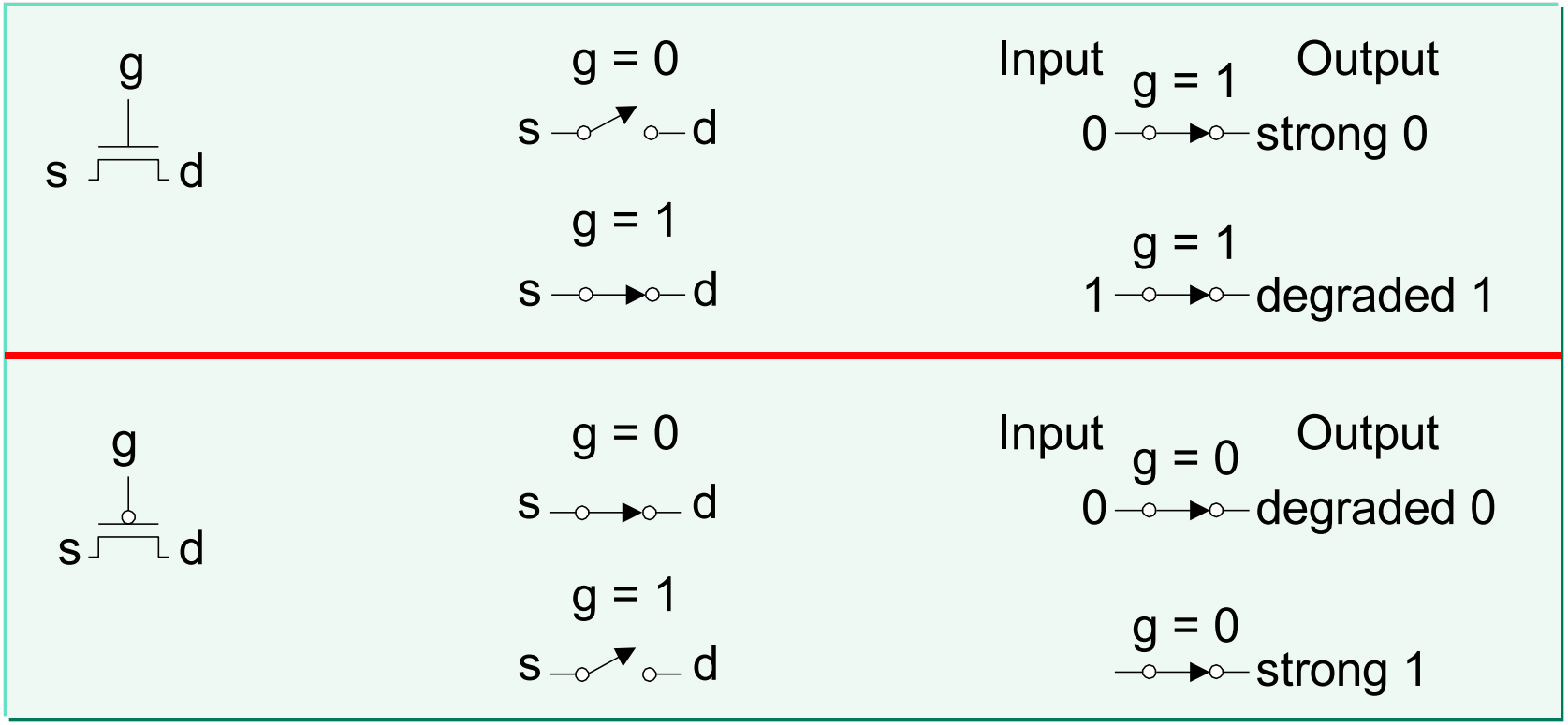

Transmission Gates

- **Pass transistors produce degraded outputs**
- ***Transmission gates* pass both 0 and 1 well**

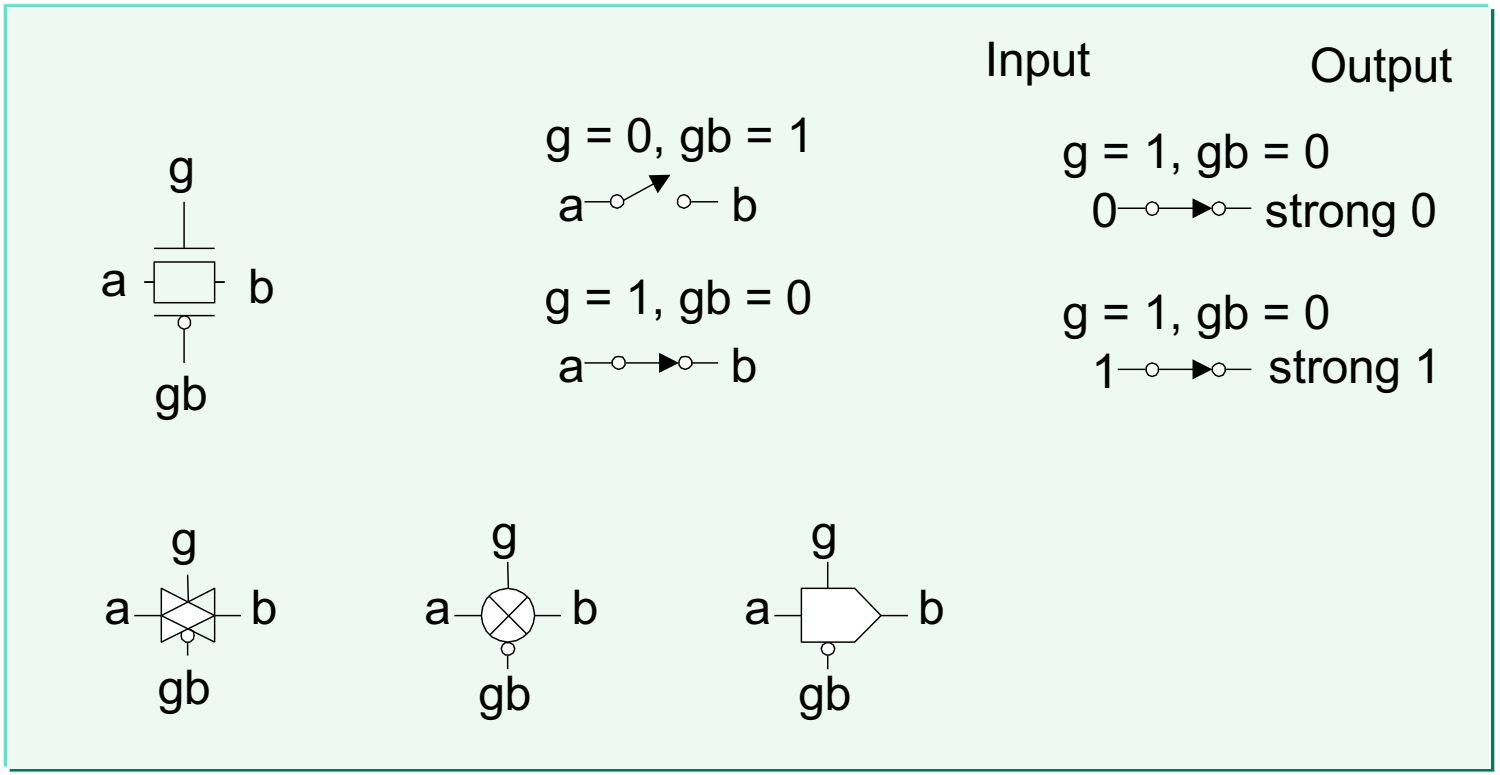

Pass Transistor Ckts

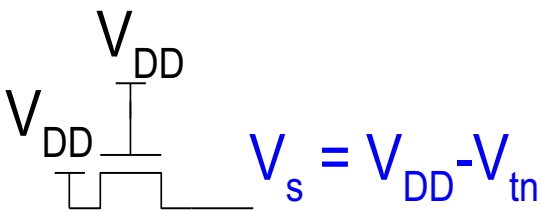

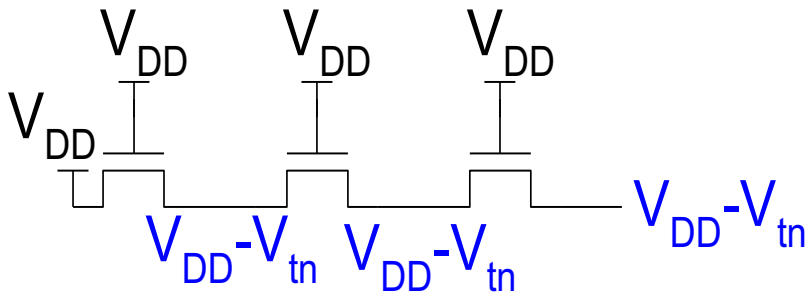

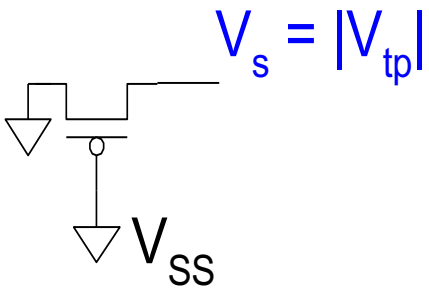

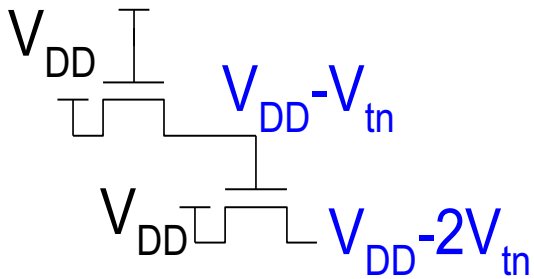

DC Response

- **DC Response: V_{out} vs. V_{in} for a gate**
- **Ex: Inverter**
  - When $V_{in} = 0$ -> $V_{out} = V_{DD}$
  - When $V_{in} = V_{DD}$ -> $V_{out} = 0$
  - In between, V_{out} depends on transistor size and current
  - By KCL, must settle such that $I_{dsn} = |I_{dsp}|$
  - We could solve equations
  - But graphical solution gives more insight

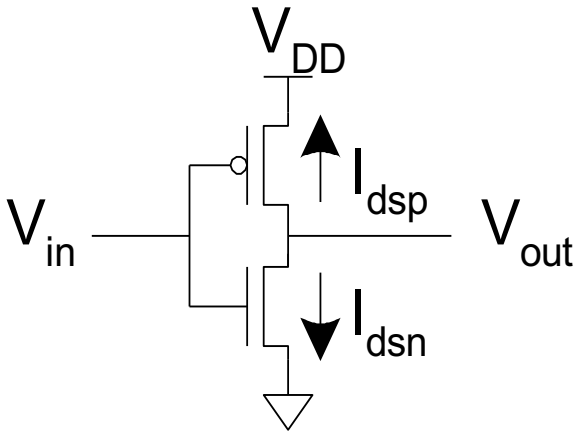

Transistor Operation

- **Current depends on region of transistor behavior**
- **For what V_{in} and V_{out} are NMOS and PMOS in**
  - Cutoff?
  - Linear?
  - Saturation?

NMOS Operation

Cutoff	Linear	Saturated
$V_{gsn} < V_{tn}$	$V_{gsn} > V_{tn}$ $V_{dsn} < V_{gsn} - V_{tn}$	$V_{gsn} > V_{tn}$ $V_{dsn} > V_{gsn} - V_{tn}$

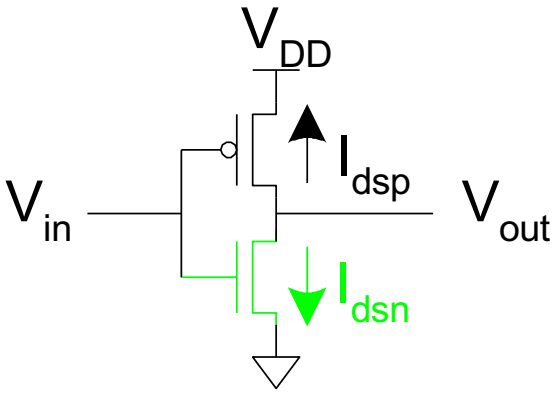

NMOS Operation

Cutoff	Linear	Saturated
$V_{gsn} < V_{tn}$	$V_{gsn} > V_{tn}$ $V_{dsn} < V_{gsn} - V_{tn}$	$V_{gsn} > V_{tn}$ $V_{dsn} > V_{gsn} - V_{tn}$

$\mathbf{V_{gsn} = V_{in}}$

$\mathbf{V_{dsn} = V_{out}}$

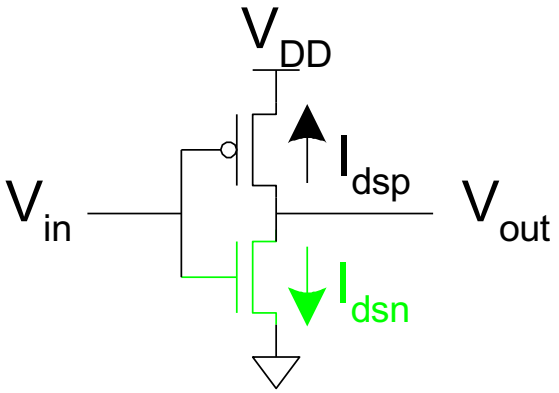

NMOS Operation

Cutoff	Linear	Saturated
$V_{gsn} < V_{tn}$ $V_{in} < V_{tn}$	$V_{gsn} > V_{tn}$ $V_{in} > V_{tn}$ $V_{dsn} < V_{gsn} - V_{tn}$ $V_{out} < V_{in} - V_{tn}$	$V_{gsn} > V_{tn}$ $V_{in} > V_{tn}$ $V_{dsn} > V_{gsn} - V_{tn}$ $V_{out} > V_{in} - V_{tn}$

$\mathbf{V_{gsn} = V_{in}}$

$\mathbf{V_{dsn} = V_{out}}$

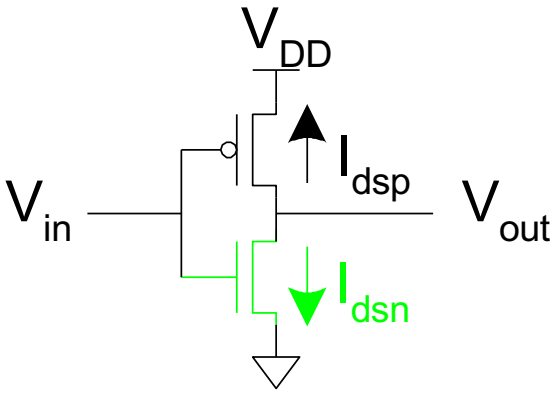

PMOS Operation

Cutoff	Linear	Saturated
V_{gsp} >	V_{gsp} < V_{dsp} >	V_{gsp} < V_{dsp} <

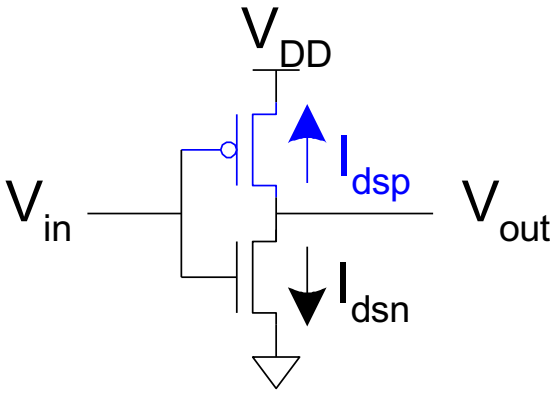

PMOS Operation

Cutoff	Linear	Saturated
$V_{gsp} > V_{tp}$	$V_{gsp} < V_{tp}$ $V_{dsp} > V_{gsp} - V_{tp}$	$V_{gsp} < V_{tp}$ $V_{dsp} < V_{gsp} - V_{tp}$

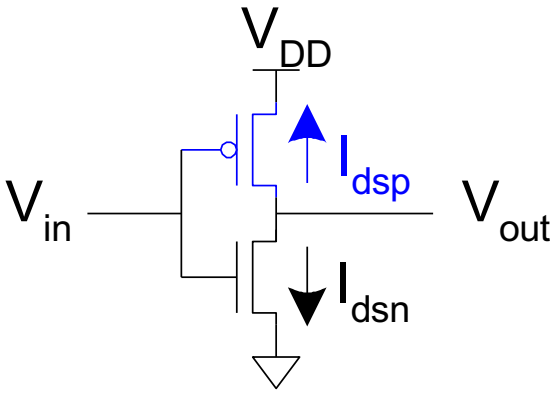

PMOS Operation

Cutoff	Linear	Saturated
$V_{gsp} > V_{tp}$	$V_{gsp} < V_{tp}$ $V_{dsp} > V_{gsp} - V_{tp}$	$V_{gsp} < V_{tp}$ $V_{dsp} < V_{gsp} - V_{tp}$

$$\mathbf{V_{gsp} = V_{in} - V_{DD}}$$

$$\mathbf{V_{dsp} = V_{out} - V_{DD}}$$

$$\mathbf{V_{tp} < 0}$$

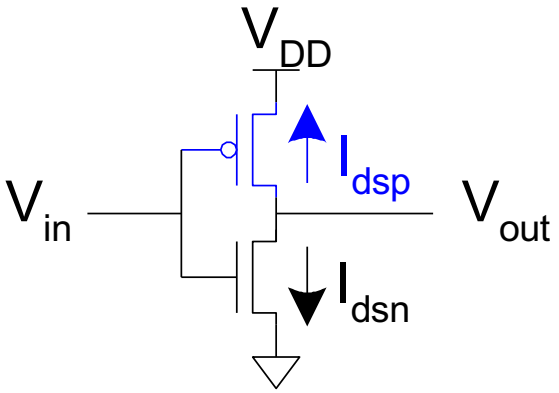

PMOS Operation

Cutoff	Linear	Saturated
$V_{gsp} > V_{tp}$ $V_{in} > V_{DD} + V_{tp}$	$V_{gsp} < V_{tp}$ $V_{in} < V_{DD} + V_{tp}$ $V_{dsp} > V_{gsp} - V_{tp}$ $V_{out} > V_{in} - V_{tp}$	$V_{gsp} < V_{tp}$ $V_{in} < V_{DD} + V_{tp}$ $V_{dsp} < V_{gsp} - V_{tp}$ $V_{out} < V_{in} - V_{tp}$

$$\mathbf{V_{gsp} = V_{in} - V_{DD}}$$

$$\mathbf{V_{dsp} = V_{out} - V_{DD}}$$

$$\mathbf{V_{tp} < 0}$$

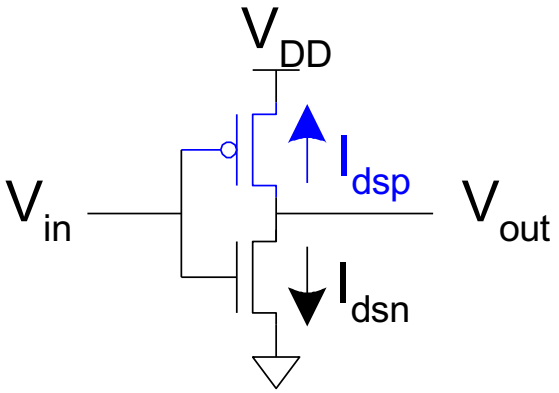

I-V Characteristics

- **Make PMOS wider than NMOS such that $\beta_n = \beta_p$**

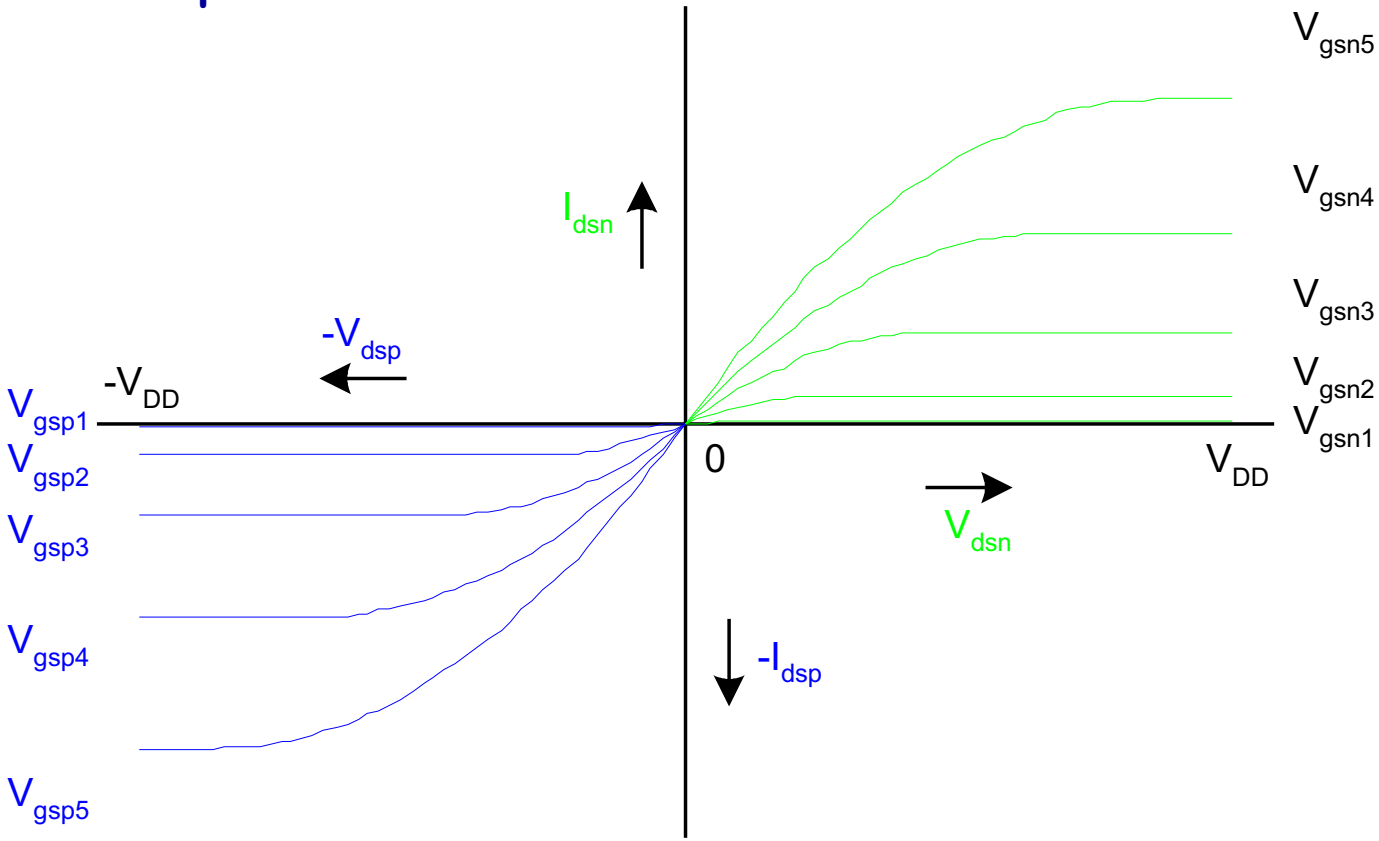

Current vs. V_{out}, V_{in}

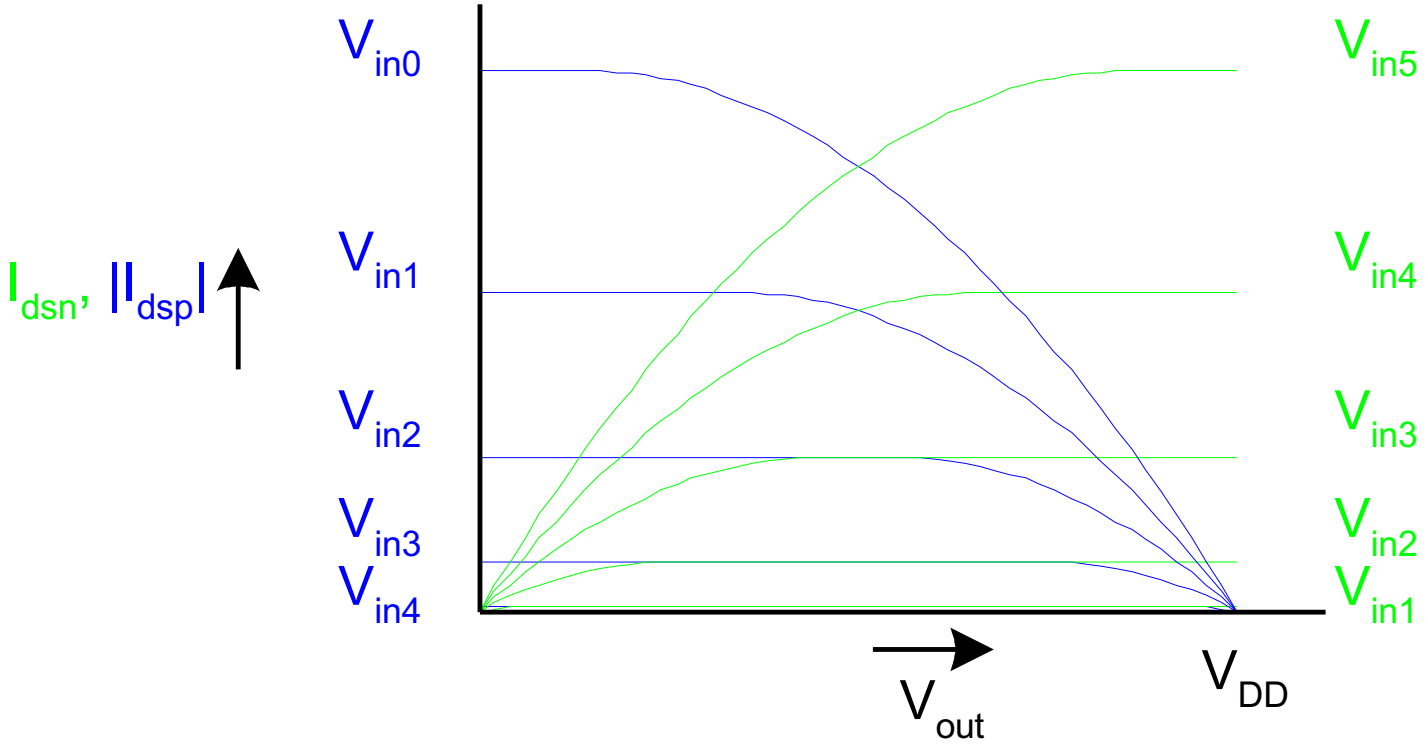

Load Line Analysis

- **For a given V_{in}:**
  - Plot I_{dsn}, I_{dsp} vs. V_{out}
  - V_{out} must be where |currents| are equal

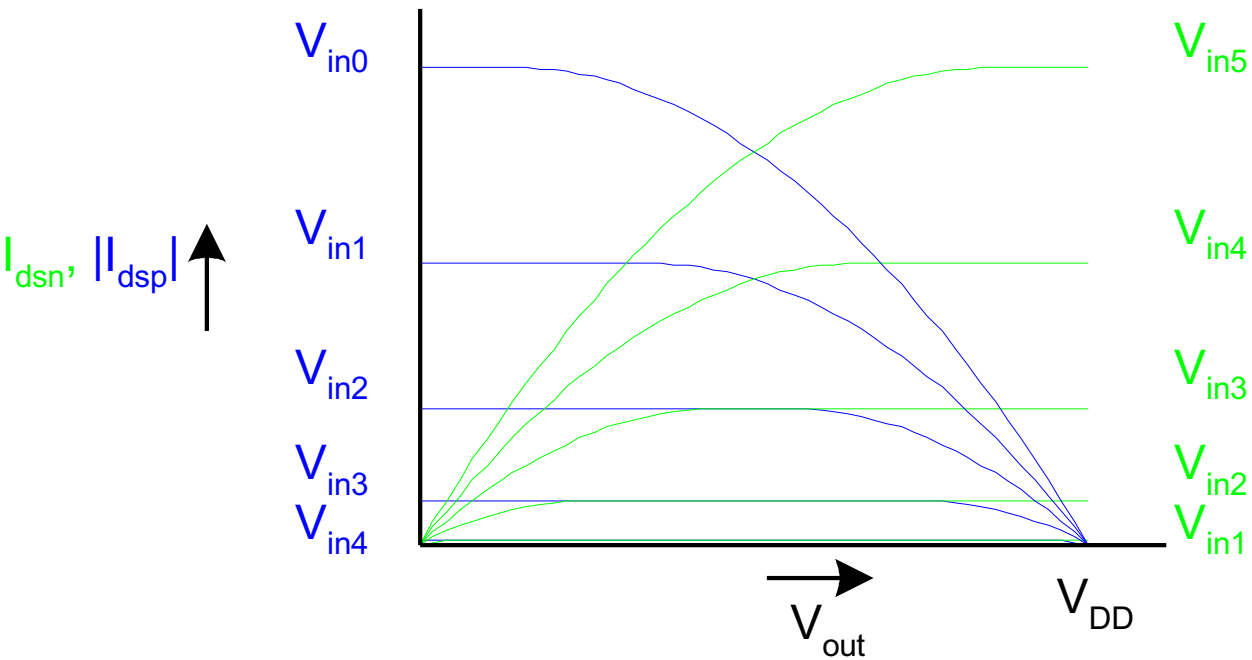

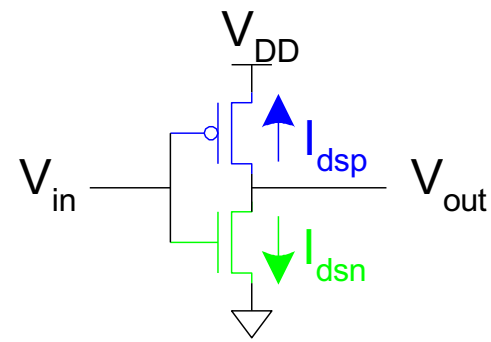

Load Line Analysis

- $V_{in} = 0$

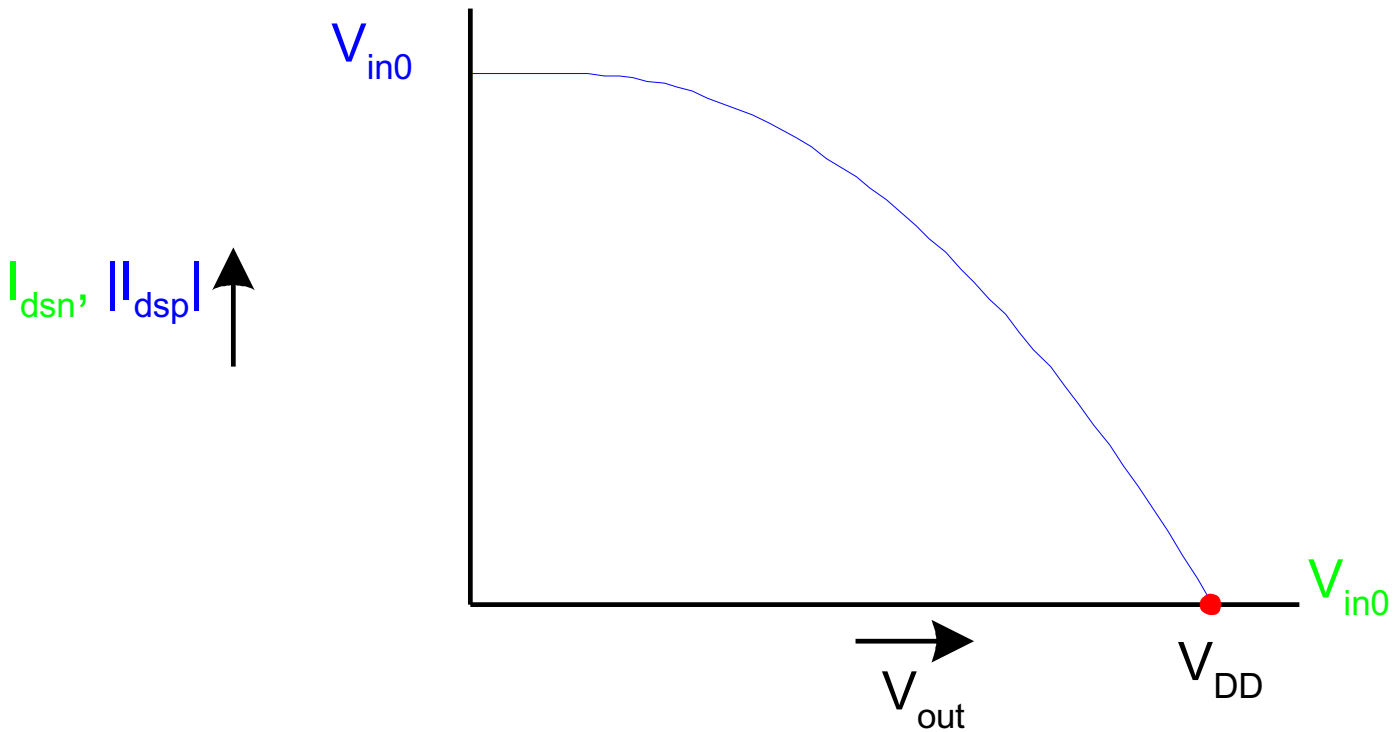

Load Line Analysis

- $V_{in} = 0.2V_{DD}$

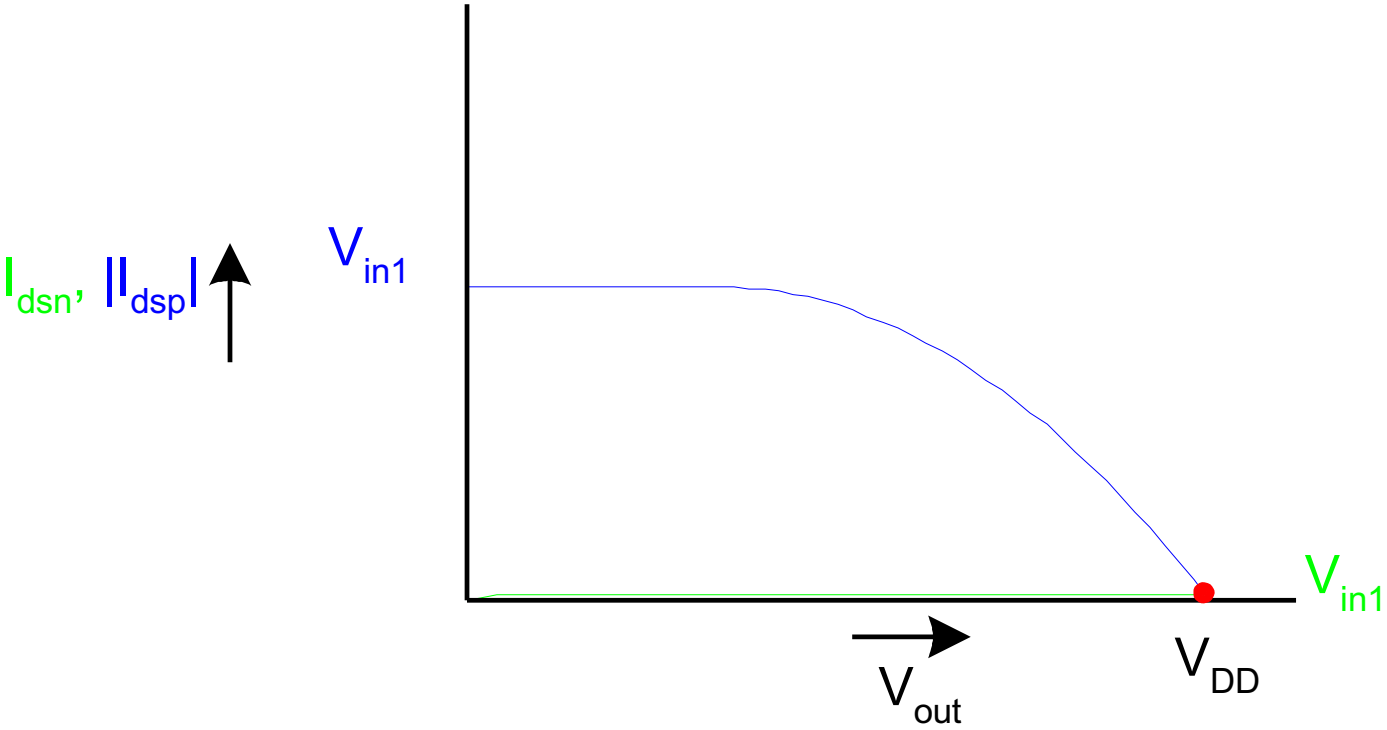

Load Line Analysis

- $V_{in} = 0.4V_{DD}$

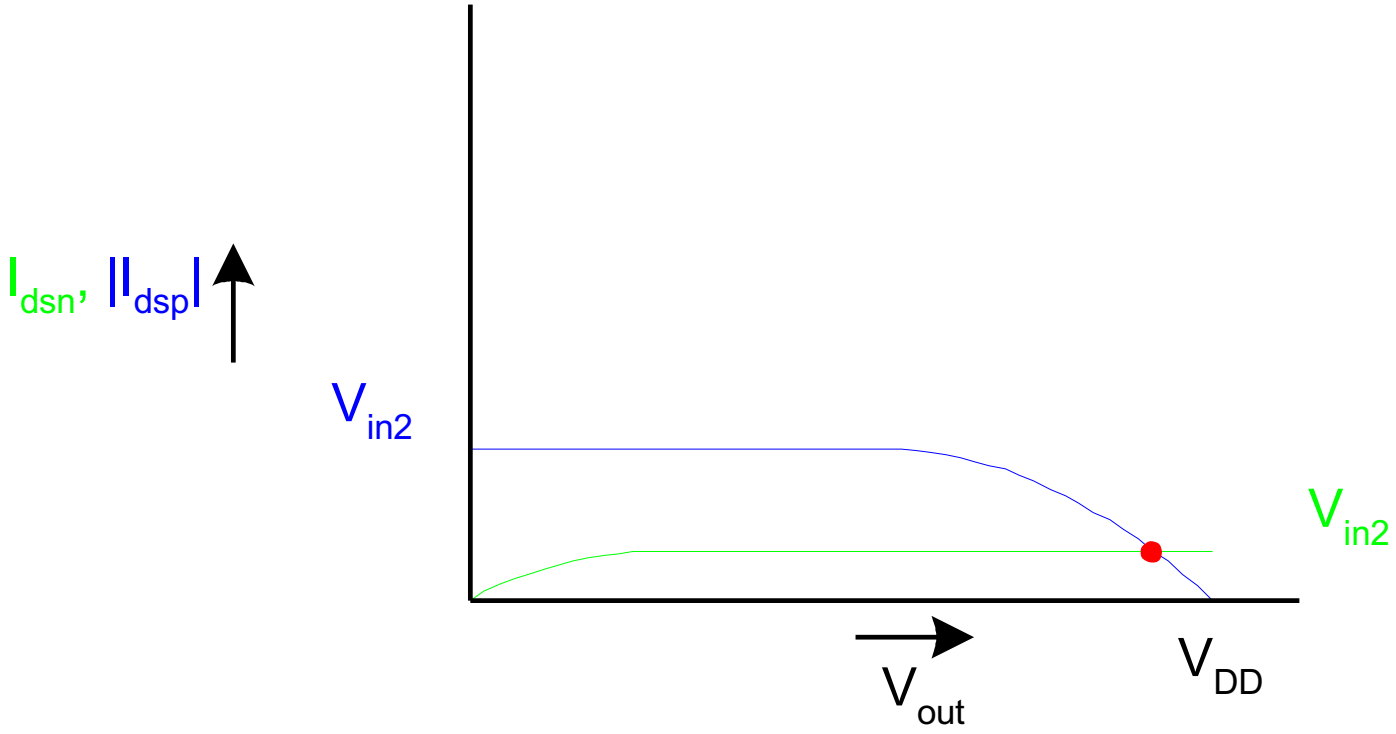

Load Line Analysis

- $V_{in} = 0.6V_{DD}$

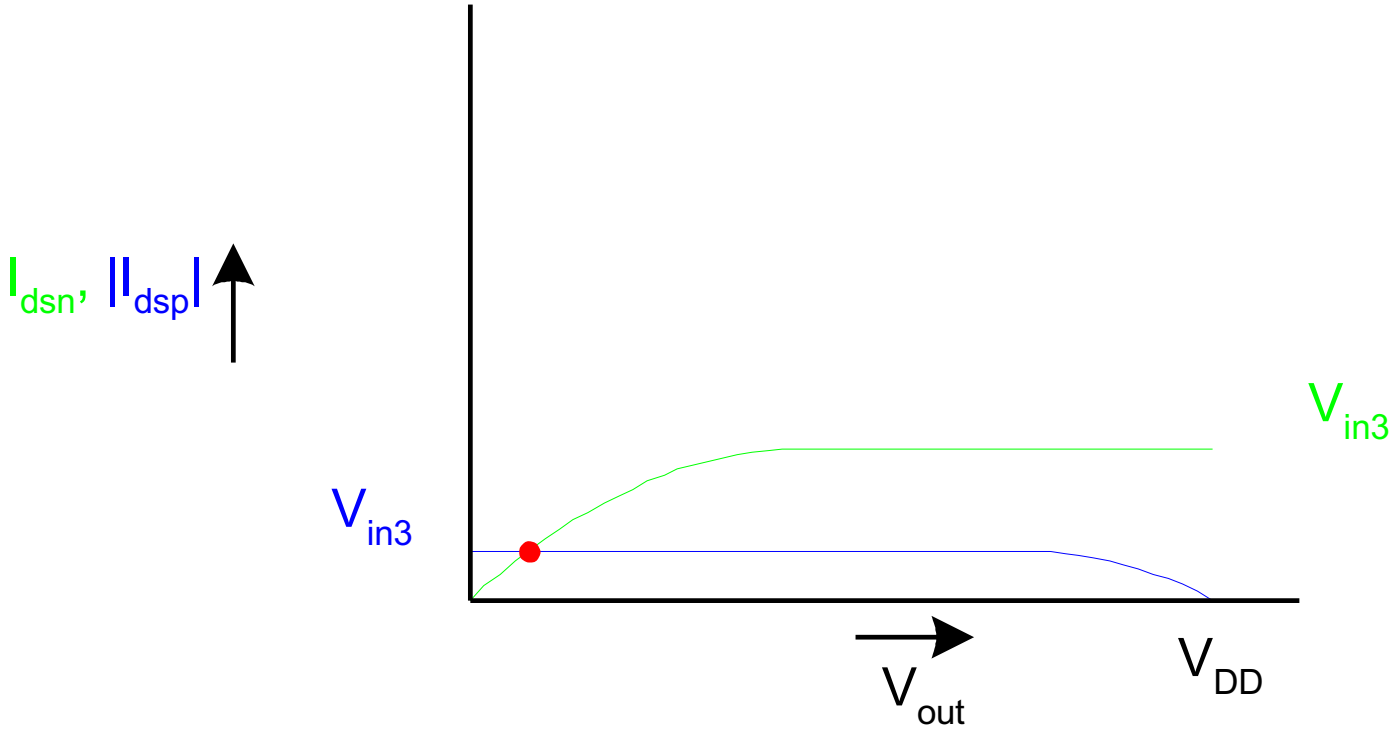

Load Line Analysis

- $V_{in} = 0.8V_{DD}$

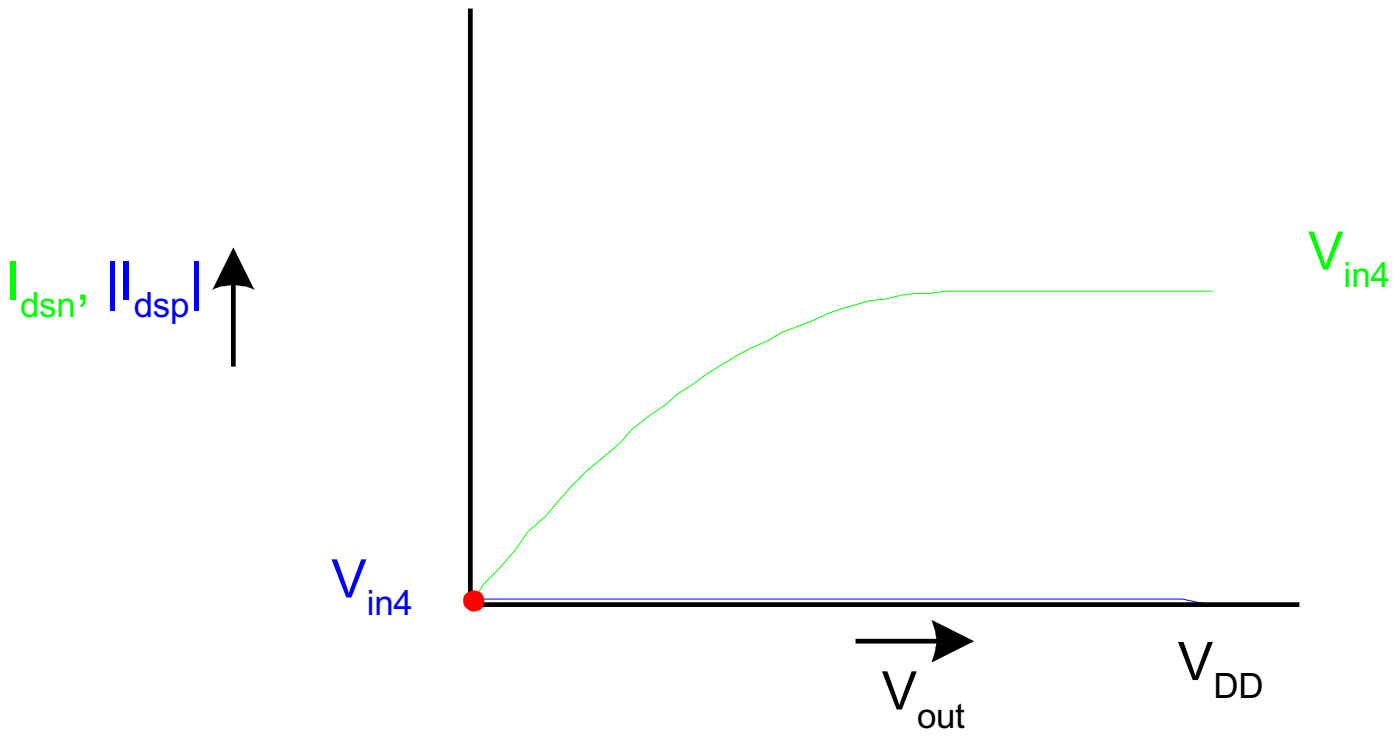

Load Line Analysis

- $V_{in} = V_{DD}$

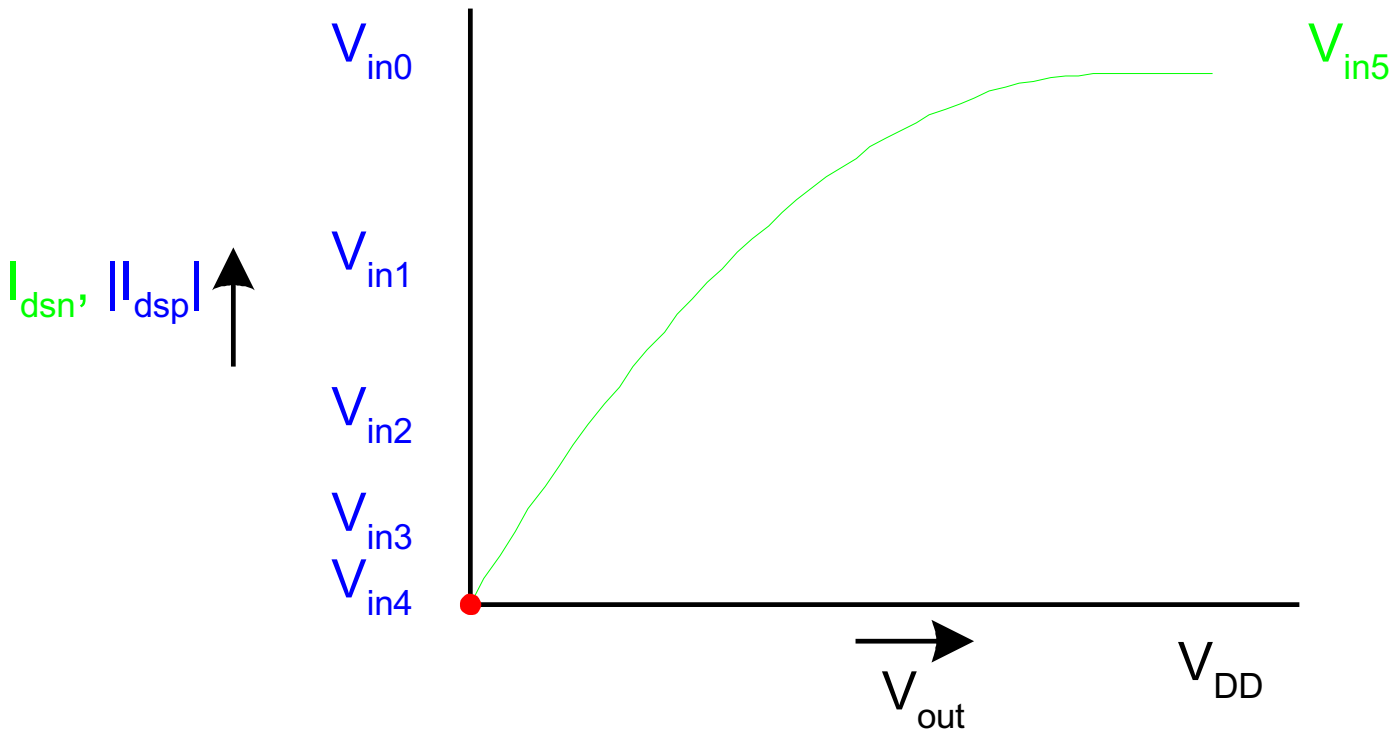

Load Line Summary

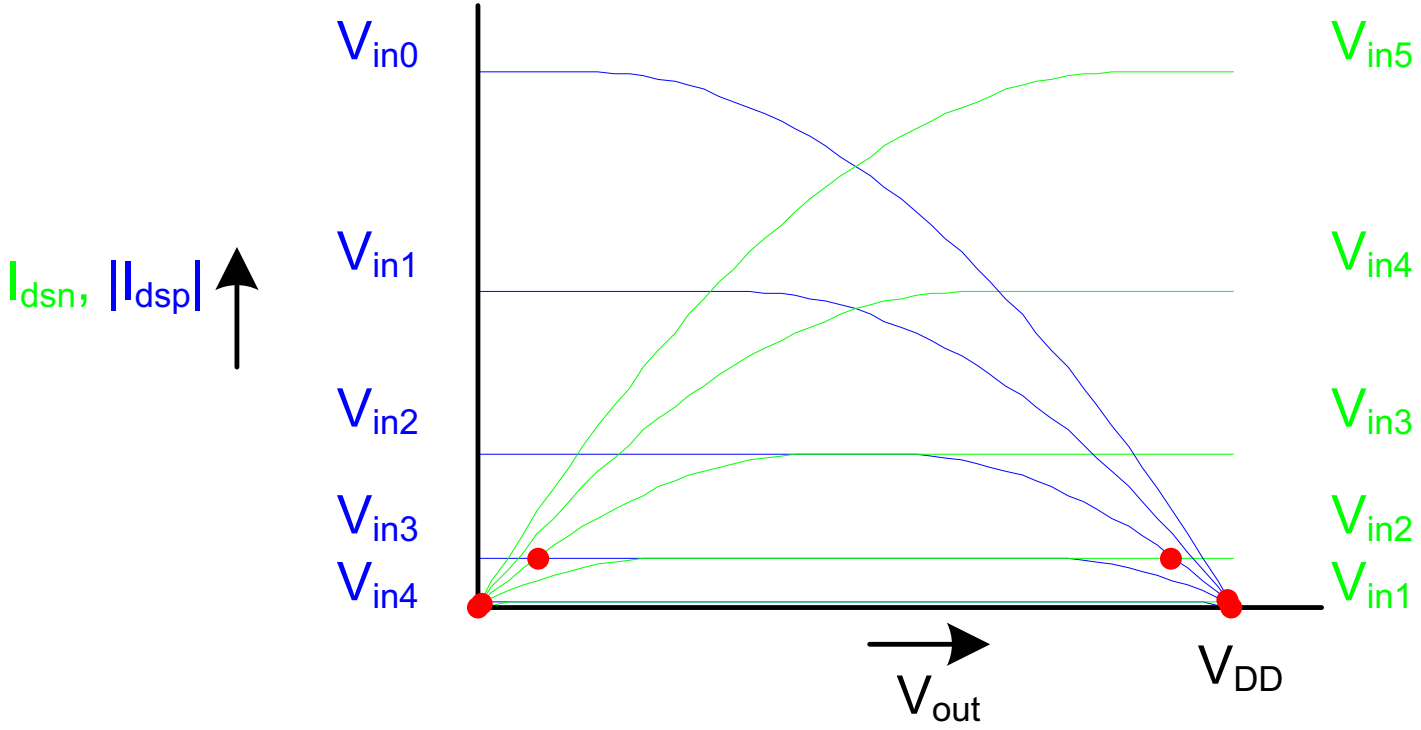

DC Transfer Curve

- **Transcribe points onto V_{in} vs. V_{out} plot**

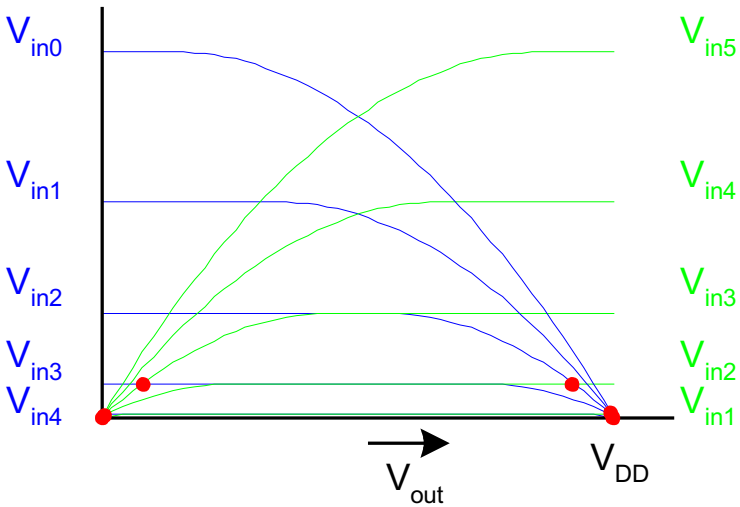

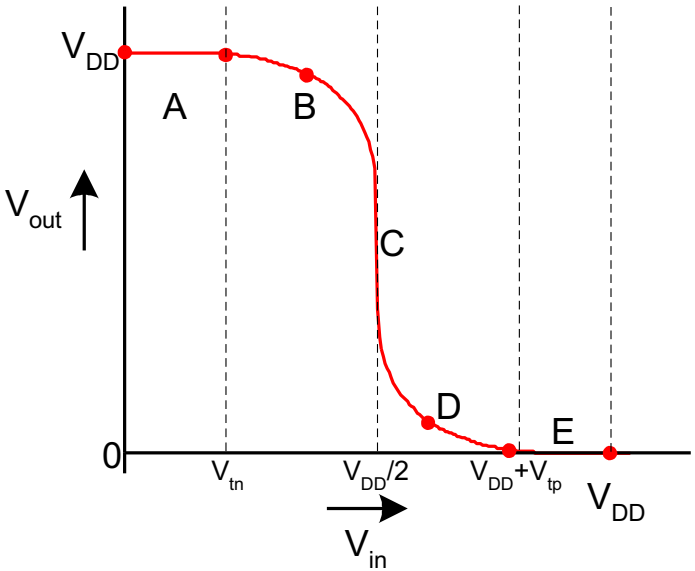

Operating Regions

- **Revisit transistor operating regions**

Region	NMOS	PMOS
A	Cutoff	Linear
B	Saturation	Linear
C	Saturation	Saturation
D	Linear	Saturation
E	Linear	Cutoff

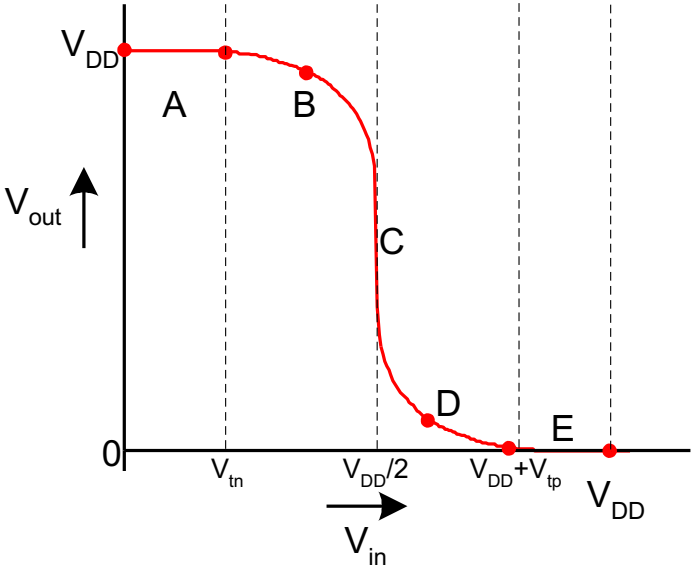

Beta Ratio

- If $\beta_p / \beta_n \neq 1$, switching point will move from $V_{DD}/2$
- Called *skewed* gate
- Other gates: collapse into equivalent inverter

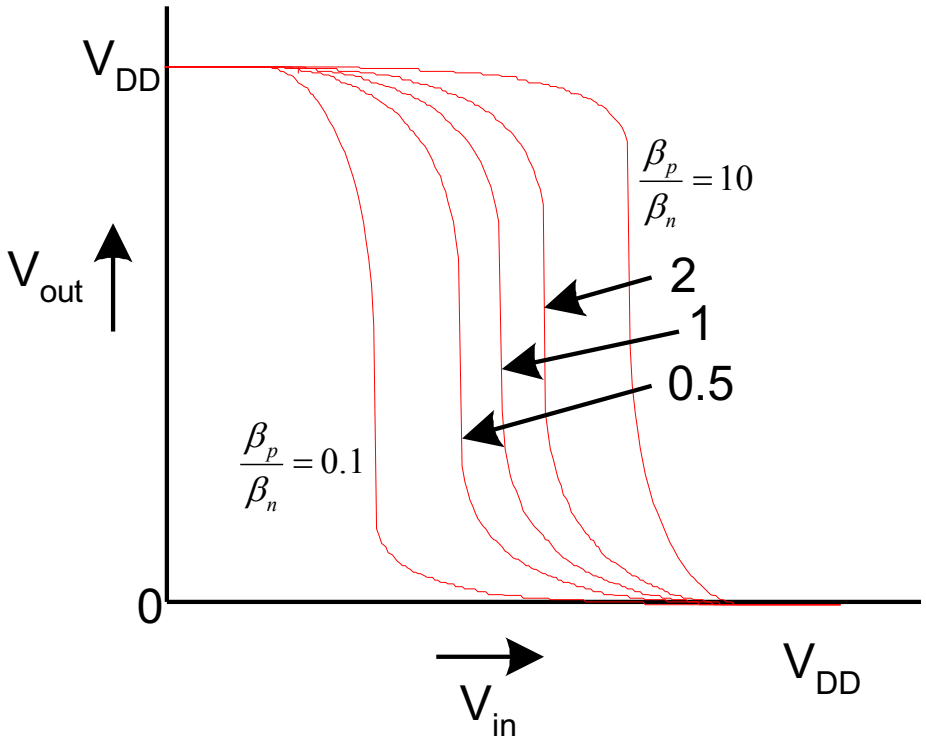

Noise Margins

- **How much noise can a gate input see before it does not recognize the input?**

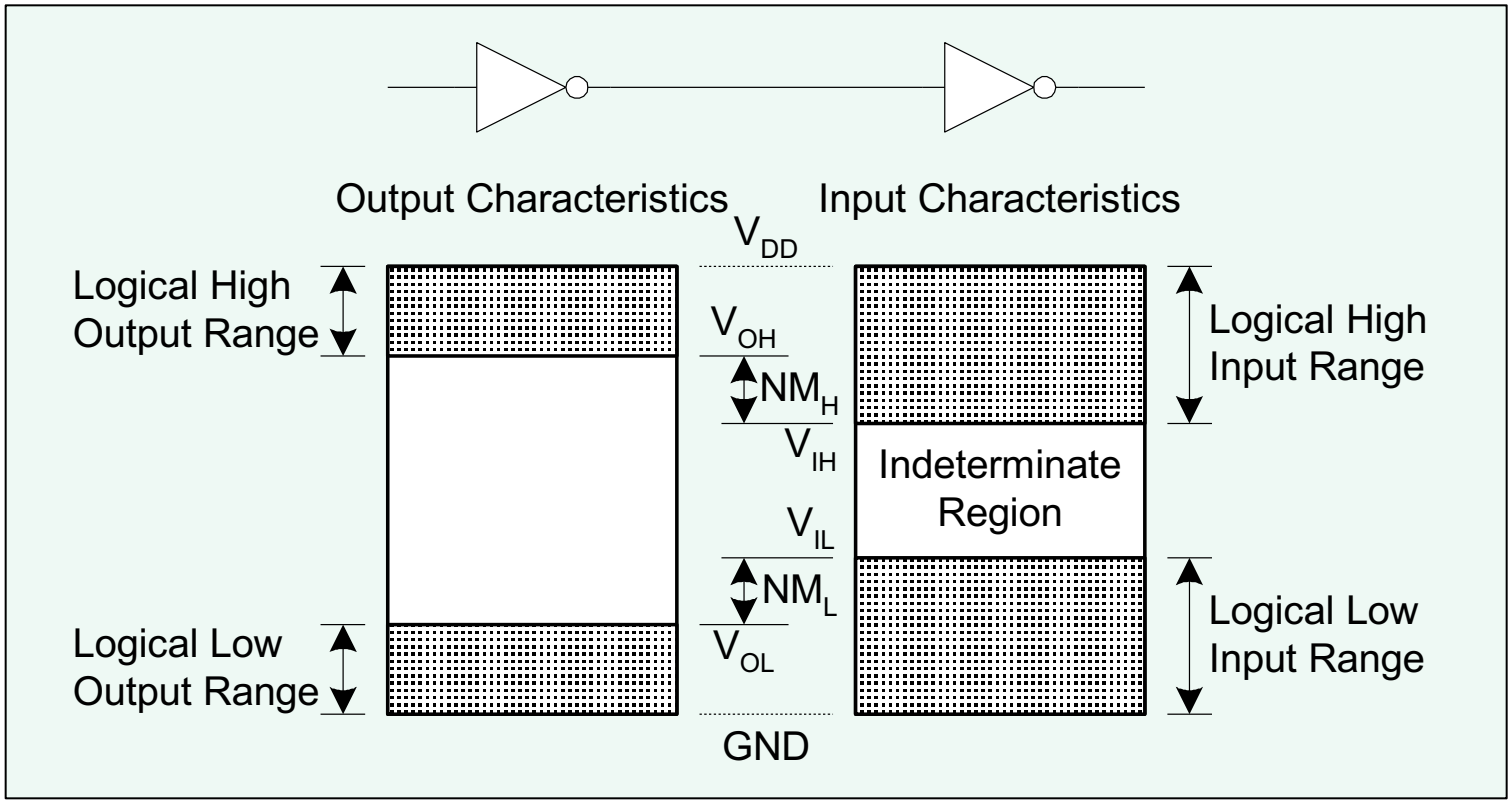

Logic Levels

- **To maximize noise margins, select logic levels at**
  - unity gain point of DC transfer characteristic

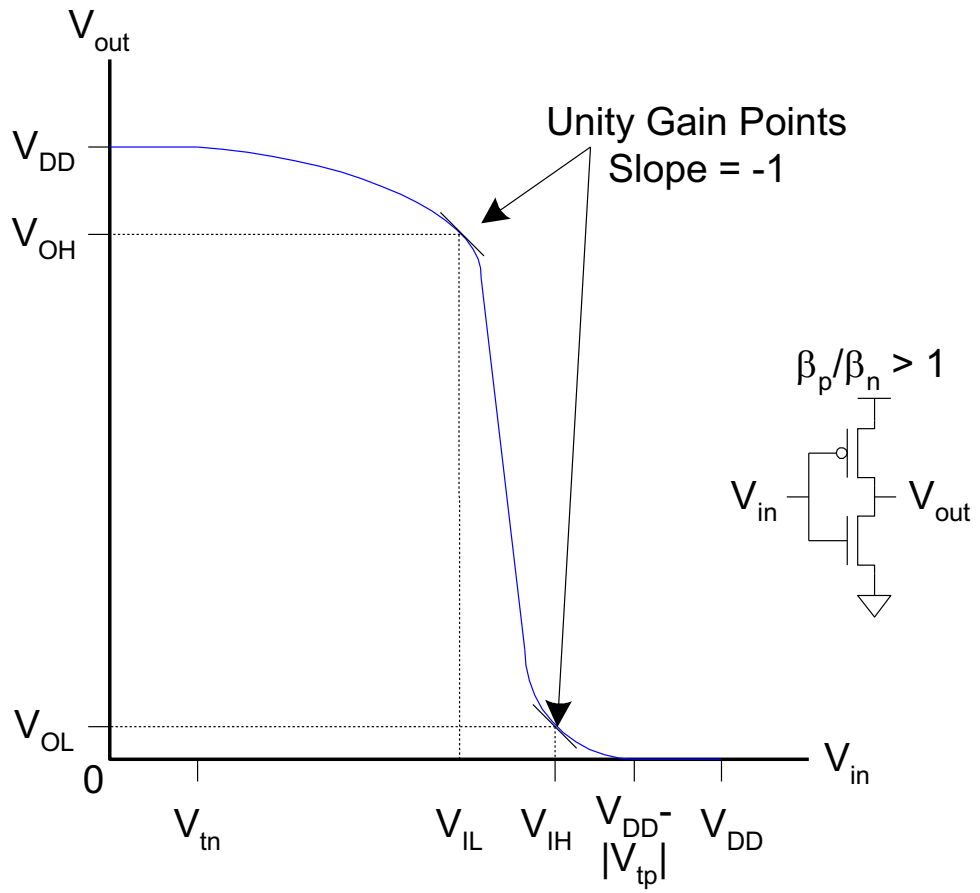

Transient Response

- ***DC analysis*** **tells us V_{out} if V_{in} is constant**
- ***Transient analysis*** **tells us $V_{out}(t)$ if $V_{in}(t)$ changes**
  - Requires solving differential equations
- **Input is usually considered to be a step or ramp**
  - From 0 to V_{DD} or vice versa

Inverter Step Response

- **Ex: find step response of inverter driving load cap**

$$V_{in}(t) = u(t - t_0)V_{DD}$$

$$V_{out}(t < t_0) =$$

$$\frac{dV_{out}(t)}{dt} =$$

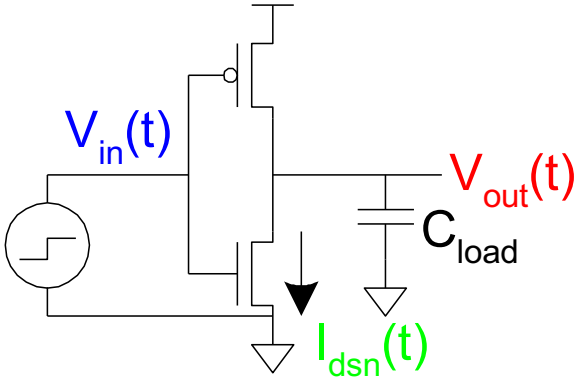

Inverter Step Response

- **Ex: find step response of inverter driving load cap**

$$V_{in}(t) = u(t - t_0)V_{DD}$$

$$V_{out}(t < t_0) = V_{DD}$$

$$\frac{dV_{out}(t)}{dt} =$$

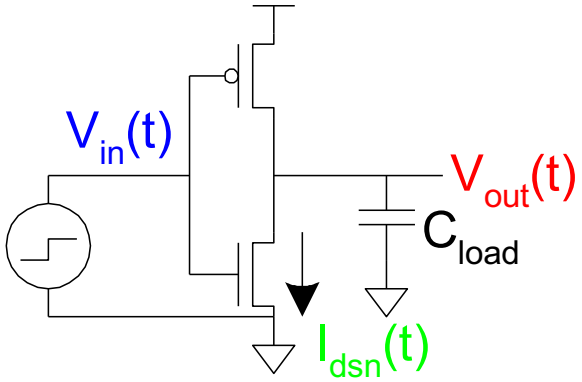

Inverter Step Response

- **Ex: find step response of inverter driving load cap**

$$V_{in}(t) = u(t - t_0)V_{DD}$$

$$V_{out}(t < t_0) = V_{DD}$$

$$\frac{dV_{out}(t)}{dt} = -\frac{I_{dsn}(t)}{C_{load}}$$

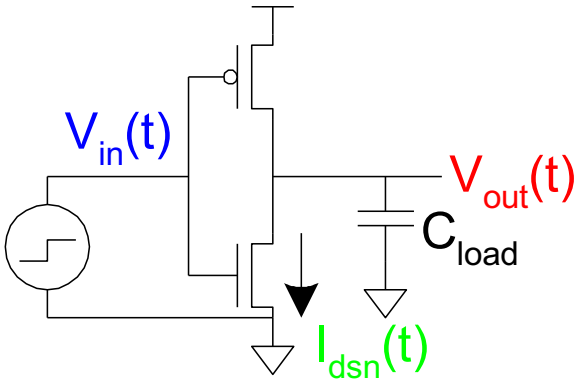

$$I_{dsn}(t) = \begin{cases} t \le t_0 \\ V_{out} > V_{DD} - V_t \\ V_{out} < V_{DD} - V_t \end{cases}$$

Inverter Step Response

- **Ex: find step response of inverter driving load cap**

$$V_{in}(t) = u(t - t_0)V_{DD}$$

$$V_{out}(t < t_0) = V_{DD}$$

$$\frac{dV_{out}(t)}{dt} = -\frac{I_{dsn}(t)}{C_{load}}$$

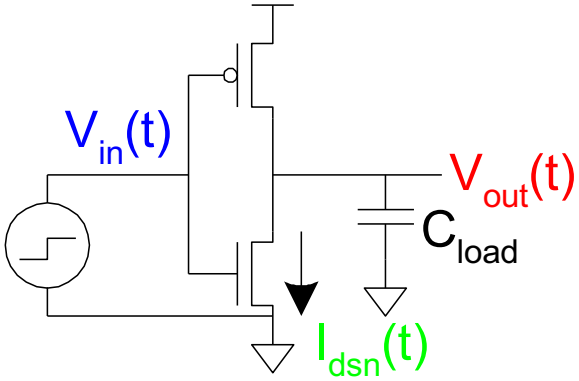

$$I_{dsn}(t) = \begin{cases} 0 & t \le t_0 \\ \frac{\beta}{2}\left(V_{DD} - V\right)^2 & V_{out} > V_{DD} - V_t \\ \beta\left(V_{DD} - V_t - {V_{out}(t)}/{2}\right)V_{out}(t) & V_{out} < V_{DD} - V_t \end{cases}$$

Inverter Step Response

- **Ex: find step response of inverter driving load cap**

$$V_{in}(t) = u(t - t_0)V_{DD}$$

$$V_{out}(t < t_0) = V_{DD}$$

$$\frac{dV_{out}(t)}{dt} = -\frac{I_{dsn}(t)}{C_{load}}$$

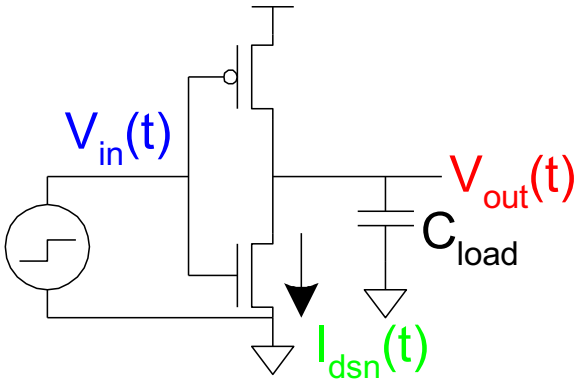

$$I_{dsn}(t) = \begin{cases} 0 & t \le t_0 \\ \frac{\beta}{2}\left(V_{DD} - V\right)^2 & V_{out} > V_{DD} - V_t \\ \beta\left(V_{DD} - V_t - V_{out}(t)/2\right)V_{out}(t) & V_{out} < V_{DD} - V_t \end{cases}$$

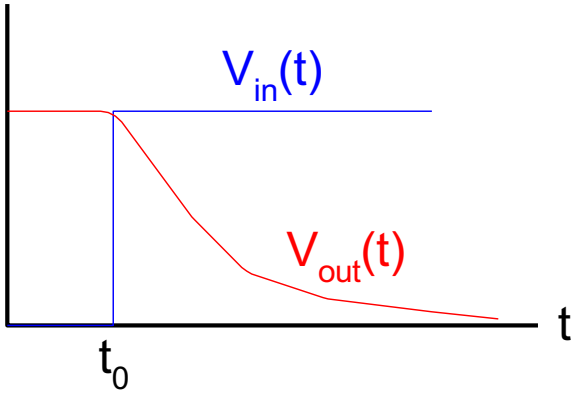

Delay Definitions

- **t_{pdr}: rising propagation delay**
  - From input to rising output crossing $V_{DD}/2$
- **t_{pdf}: falling propagation delay**
  - From input to falling output crossing $V_{DD}/2$
- **t_{pd}: average propagation delay**
  - $t_{pd} = (t_{pdr} + t_{pdf})/2$
- **t_r: rise time**
  - From output crossing 0.2 V_{DD} to 0.8 V_{DD}
- **t_f: fall time**
  - From output crossing 0.8 V_{DD} to 0.2 V_{DD}

Delay Definitions

- **t_{cdr}: rising contamination delay**
  - From input to rising output crossing $V_{DD}/2$
- **t_{cdf}: falling contamination delay**
  - From input to falling output crossing $V_{DD}/2$
- **t_{cd}: average contamination delay**
  - $t_{pd} = (t_{cdr} + t_{cdf})/2$

Simulated Inverter Delay

- **Solving differential equations by hand is too hard**
- **SPICE simulator solves the equations numerically**
  - Uses more accurate I-V models too!
- **But simulations take time to write**

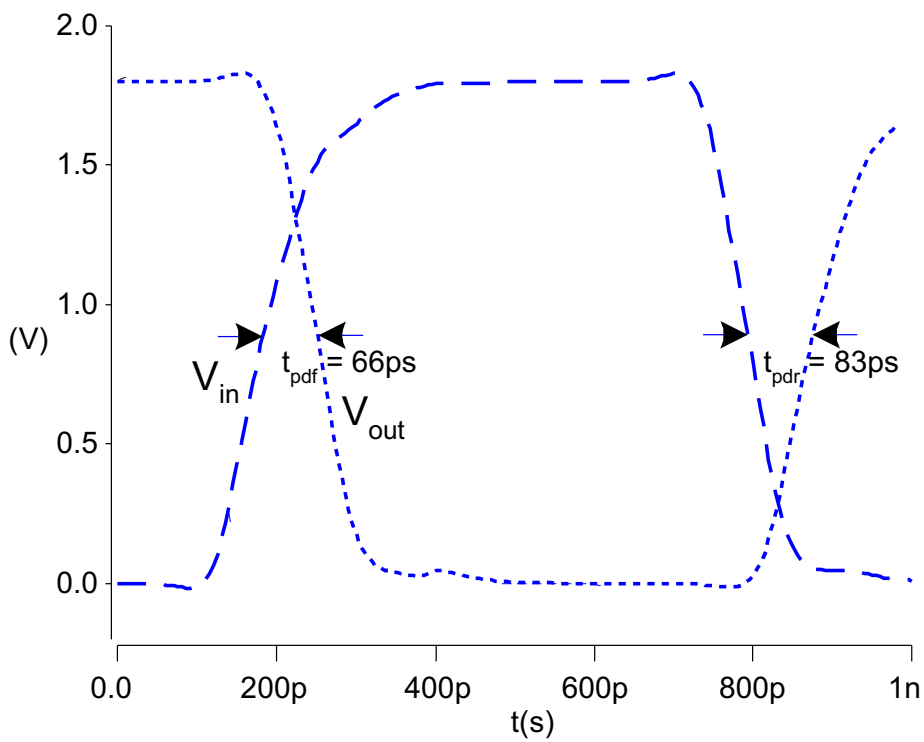

Delay Estimation

- **We would like to be able to easily estimate delay**
  - Not as accurate as simulation
  - But easier to ask "What if?"
- **The step response usually looks like a 1st order RC response with a decaying exponential.**
- **Use RC delay models to estimate delay**
  - C = total capacitance on output node
  - Use *effective resistance* R
  - So that t_{pd} = RC
- **Characterize transistors by finding their effective R**
  - Depends on average current as gate switches

Effective Resistance

- **Shockley models have limited value**
  - Not accurate enough for modern transistors
  - Too complicated for much hand analysis
- **Simplification: treat transistor as resistor**
  - Replace $I_{ds}(V_{ds}, V_{gs})$ with effective resistance R
    - $I_{ds} = V_{ds}/R$
  - R averaged across switching of digital gate
- **Too inaccurate to predict current at any given time**
  - But good enough to predict RC delay

RC Delay Model

- **Use equivalent circuits for MOS transistors**
  - Ideal switch + capacitance and ON resistance
  - Unit NMOS has resistance R, capacitance C
  - Unit PMOS has resistance 2R, capacitance C
- **Capacitance proportional to width**
- **Resistance inversely proportional to width**

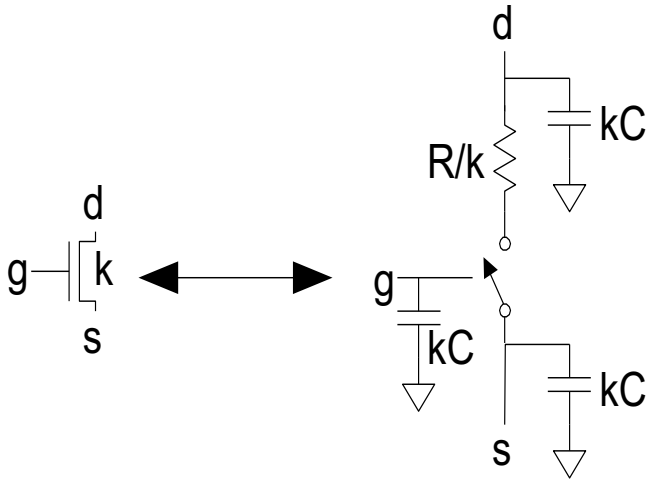

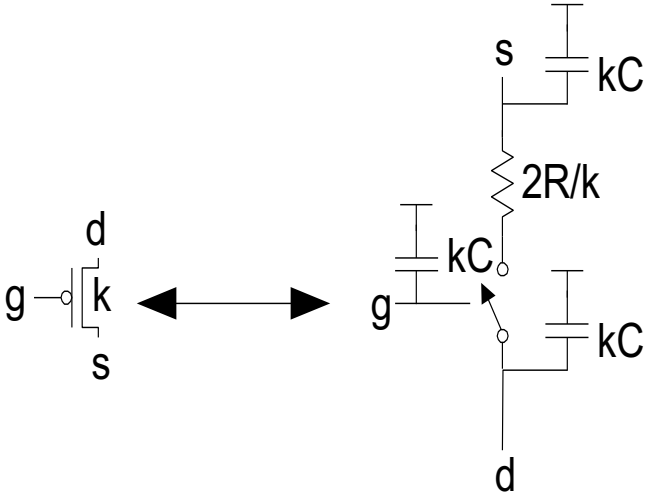

RC Values

- **Capacitance**
  - $C = C_g = C_s = C_d = 2$ fF/μm of gate width
  - Values similar across many processes
- **Resistance**
  - $R \approx 6$ KΩ*μm in 0.6um process
  - Improves with shorter channel lengths
- **Unit transistors**
  - May refer to minimum contacted device (4/2 λ)
  - Or maybe 1 μm wide device
  - Doesn't matter as long as you are consistent

Inverter Delay Estimate

- **Estimate the delay of a fanout-of-1 inverter**

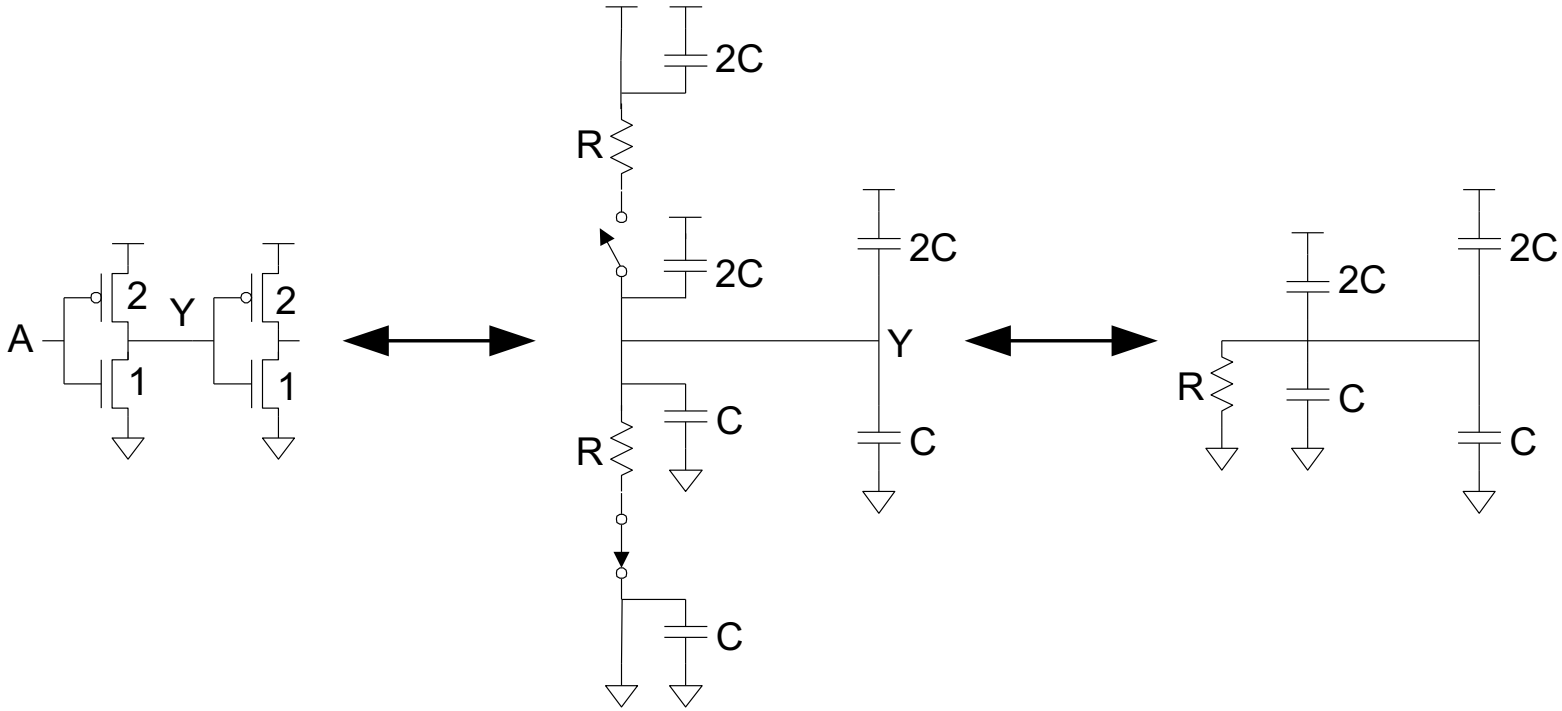

Delay = 6RC

Delay Model Comparison

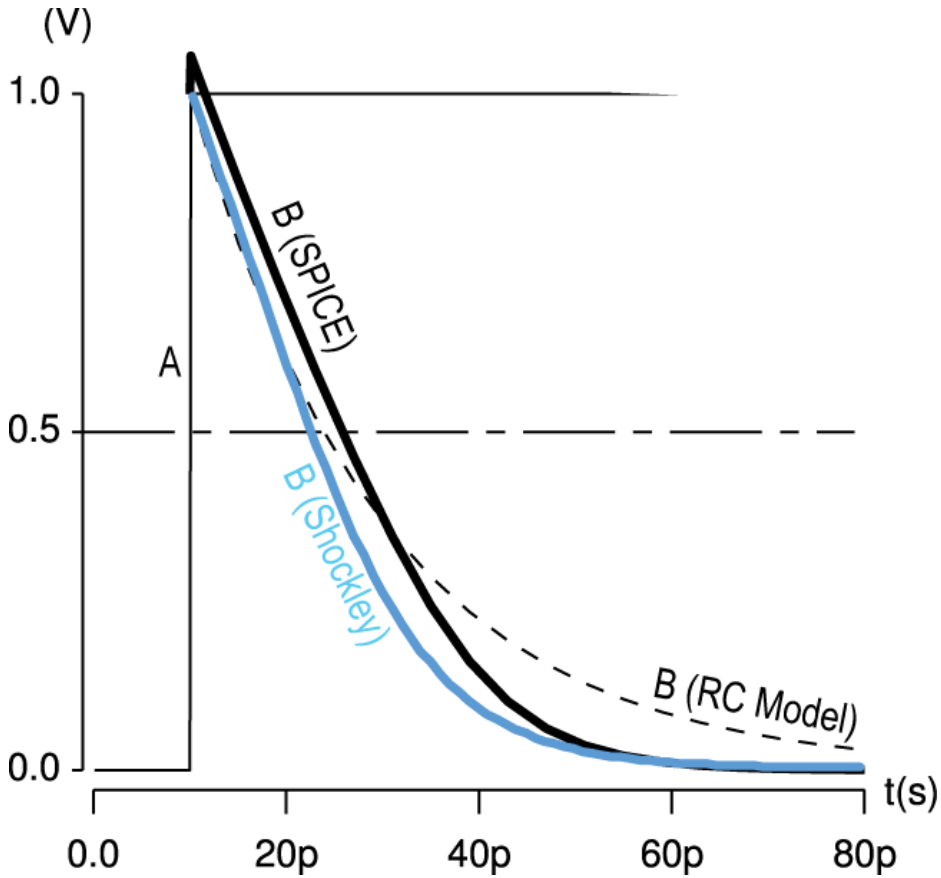

Example: 3-input NAND

- Sketch a 3-input NAND with transistor widths chosen to achieve effective rise and fall resistances equal to a unit inverter (R).

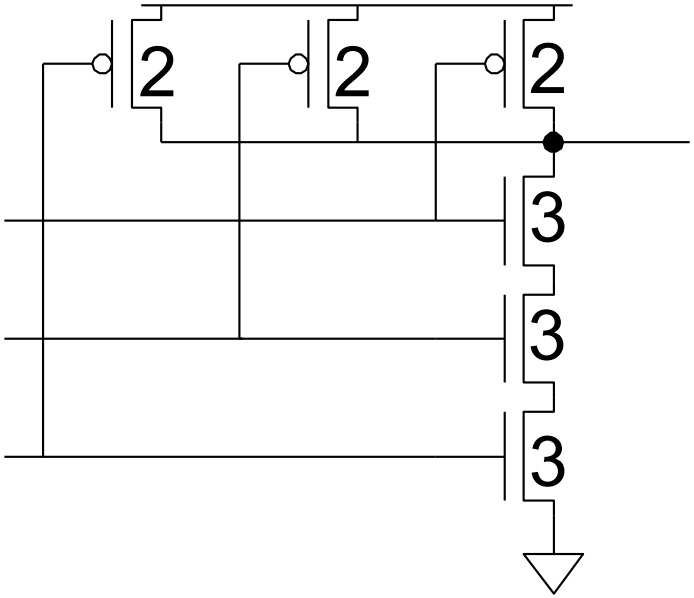

3-input NAND Caps

- Annotate the 3-input NAND gate with gate and diffusion capacitance.

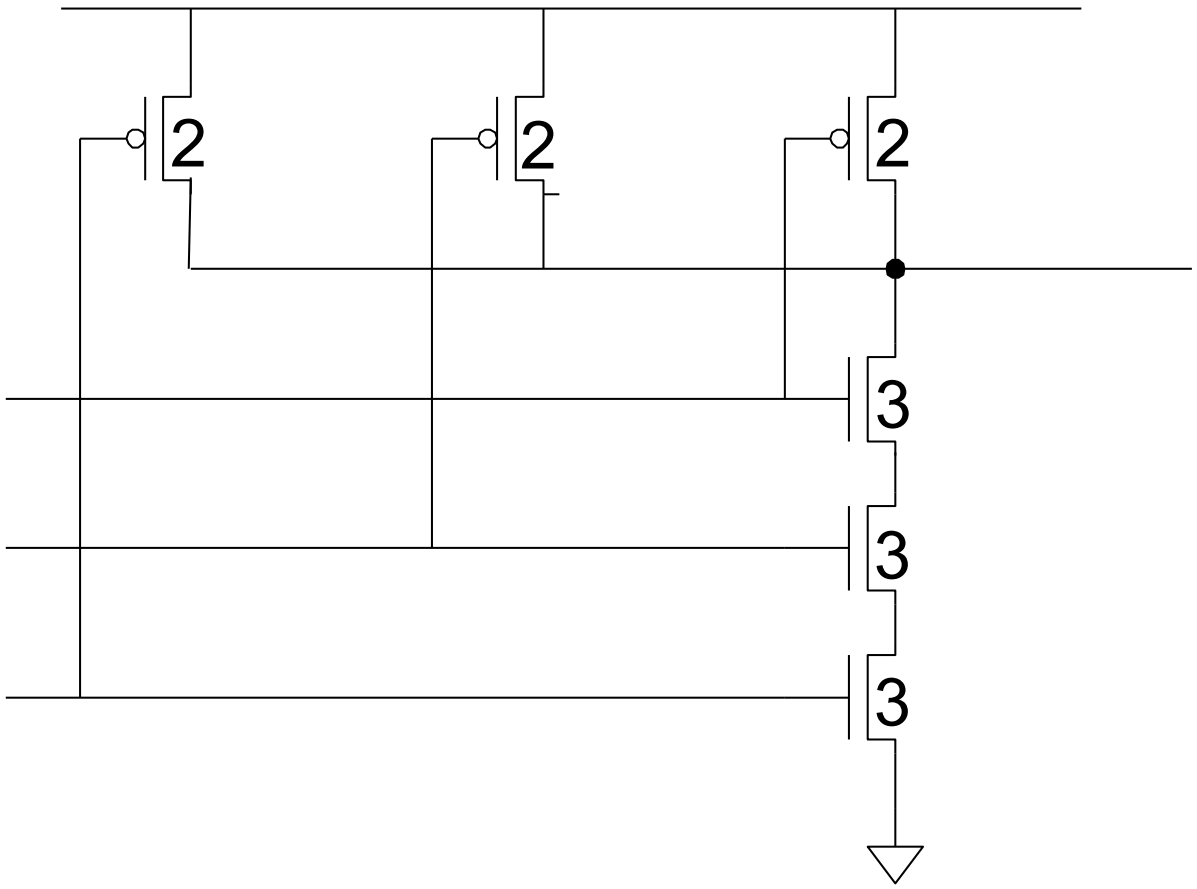

3-input NAND Caps

- **Annotate the 3-input NAND gate with gate and diffusion capacitance.**

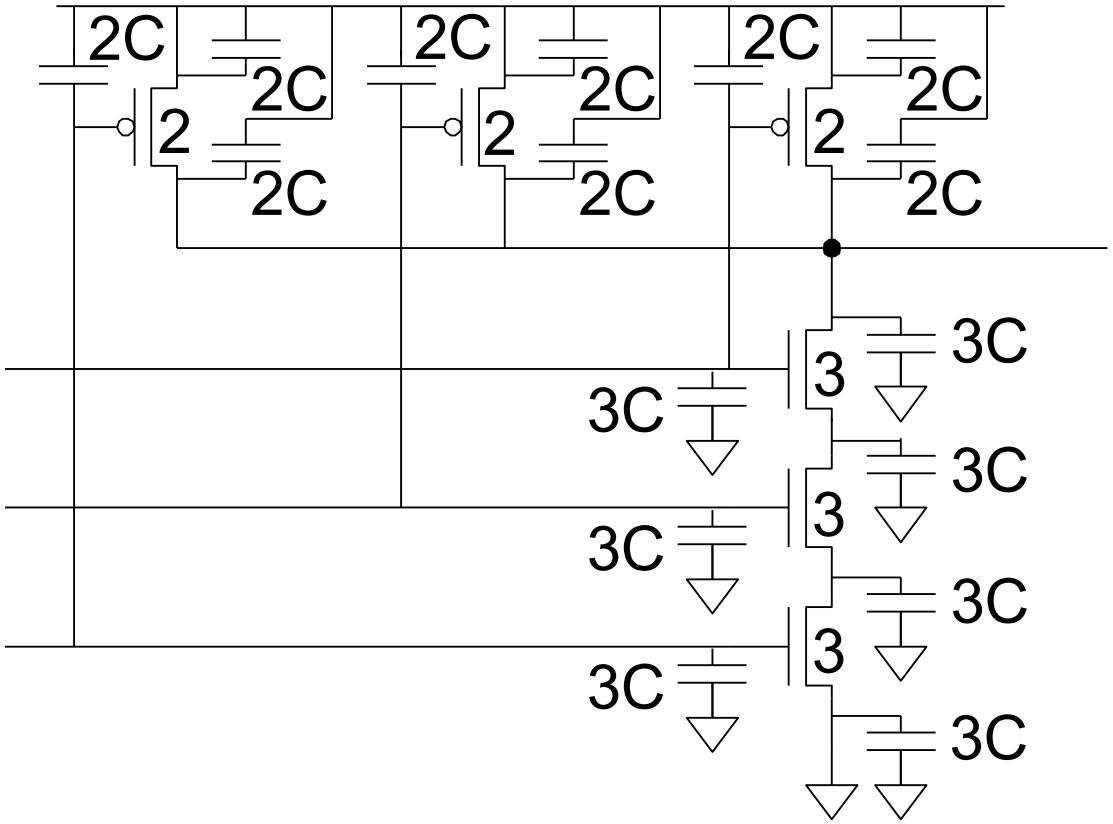

3-input NAND Caps

- Annotate the 3-input NAND gate with gate and diffusion capacitance.

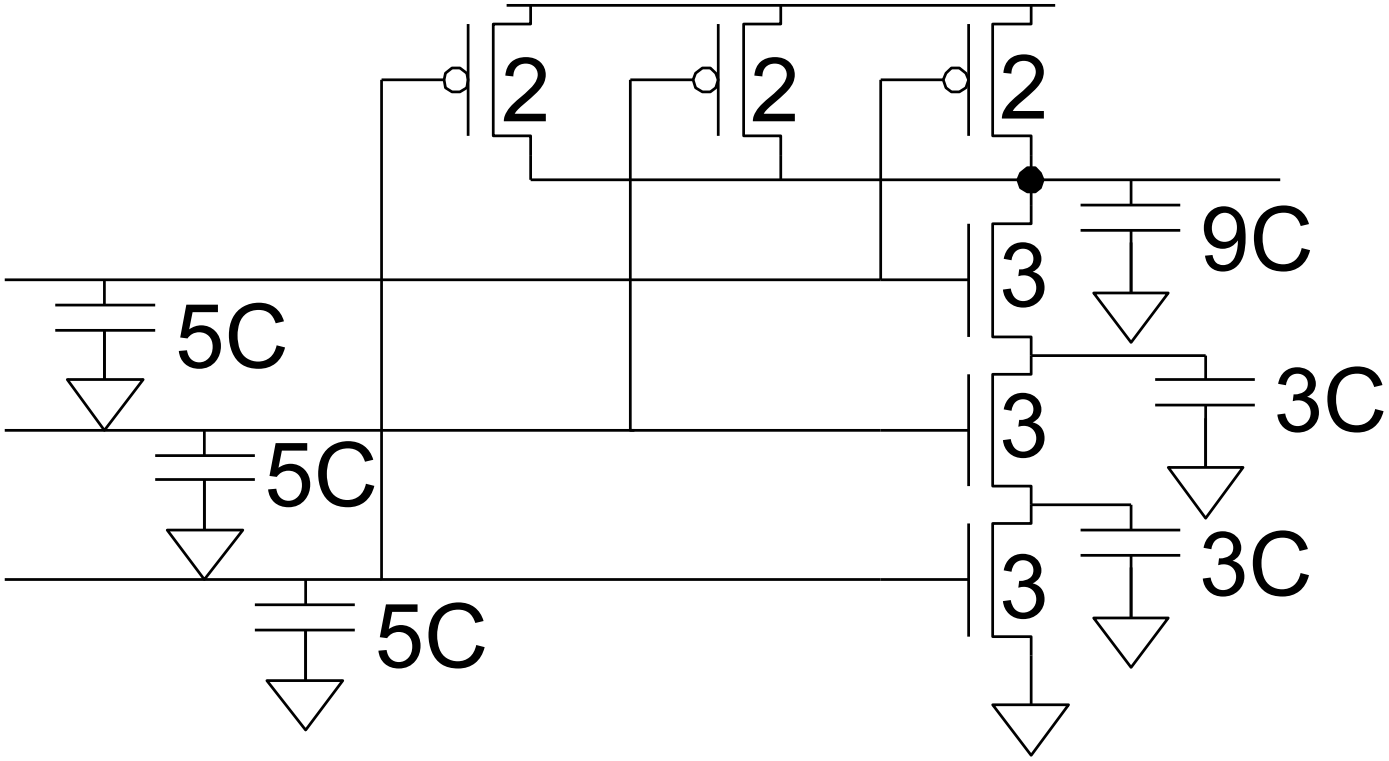

Elmore Delay

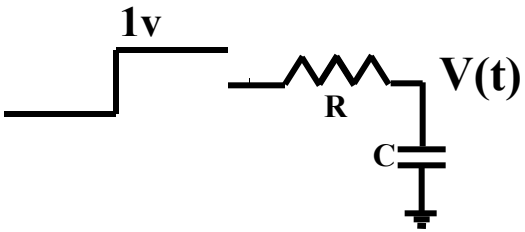

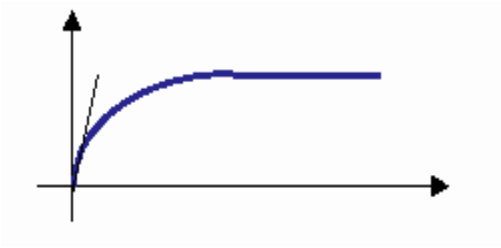

$$V(t) = 1 - e^{-\frac{t}{RC}}$$

Time Constant=RC

- **What is the time constant for more complex circuits?**

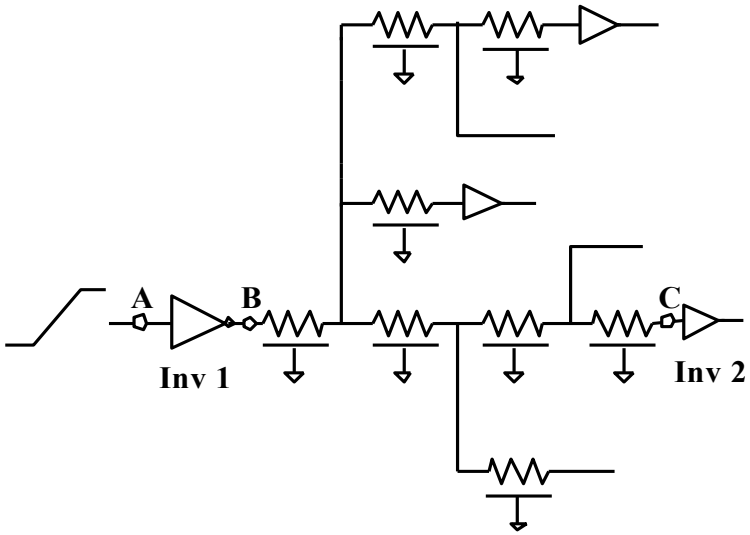

Elmore Delay (Cont.)

- ON transistors look like resistors
- Pullup or pulldown network modeled as *RC ladder*
- Example: Elmore delay of an RC ladder

$$t_{pd} \approx \sum_{\text{nodes } i} R_{i-to-source} C_i$$

$$= R_1 C_1 + \left(R_1 + R_2\right) C_2 + \ldots + \left(R_1 + R_2 + \ldots + R_N\right) C_N$$

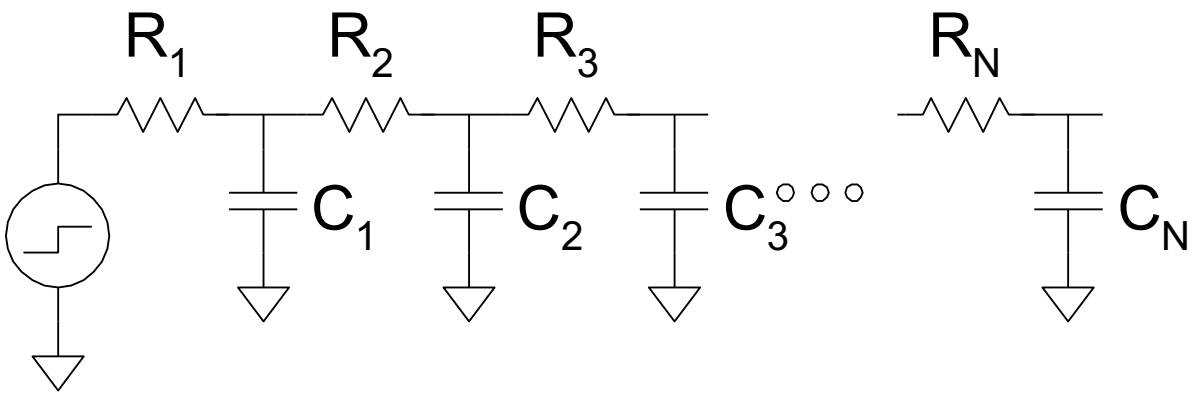

Elmore Delay (Cont.)

- **Elmore delay for tree-structured circuits:**

$$t_{pd} = \sum_{i \text{ on path}} R_i C_{downstream,i}$$

Example:

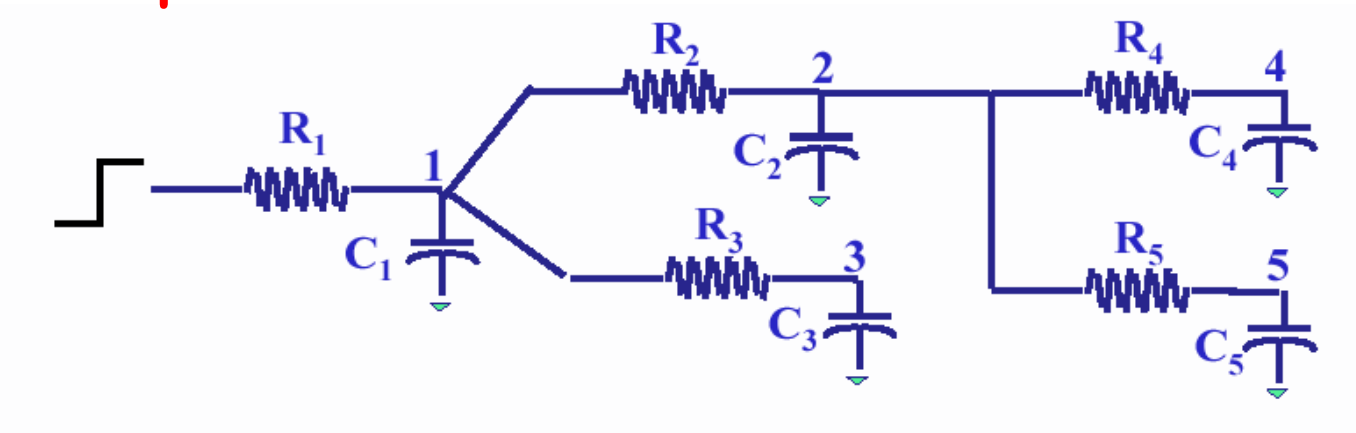

$$t_{pd4}=R_1(C_1+C_2+C_3+C_4+C_5)+R_2(C_2+C_4+C_5)+R_4C_4$$

Example: 2-input NAND

- **Estimate worst-case rising and falling delay of 2-input NAND driving *h* identical gates.**

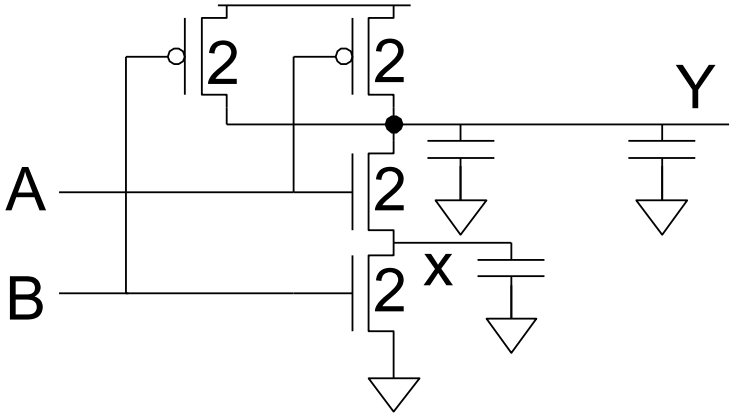

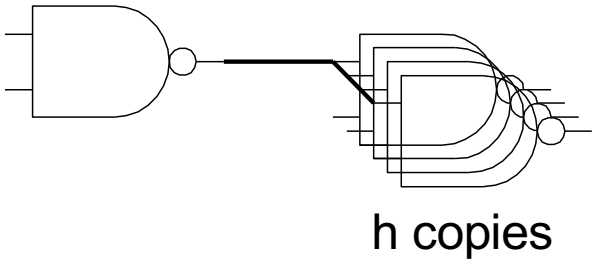

Example: 2-input NAND

- **Estimate rising and falling propagation delays of a 2-input NAND driving *h* identical gates.**

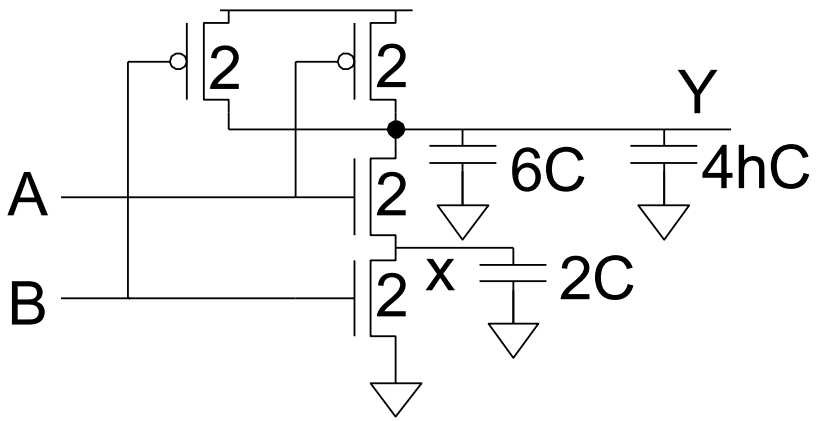

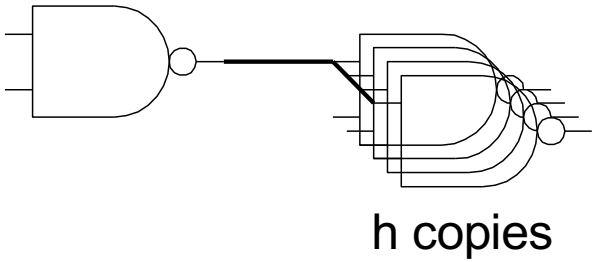

Example: 2-input NAND

- **Estimate rising and falling propagation delays of a 2-input NAND driving *h* identical gates.**

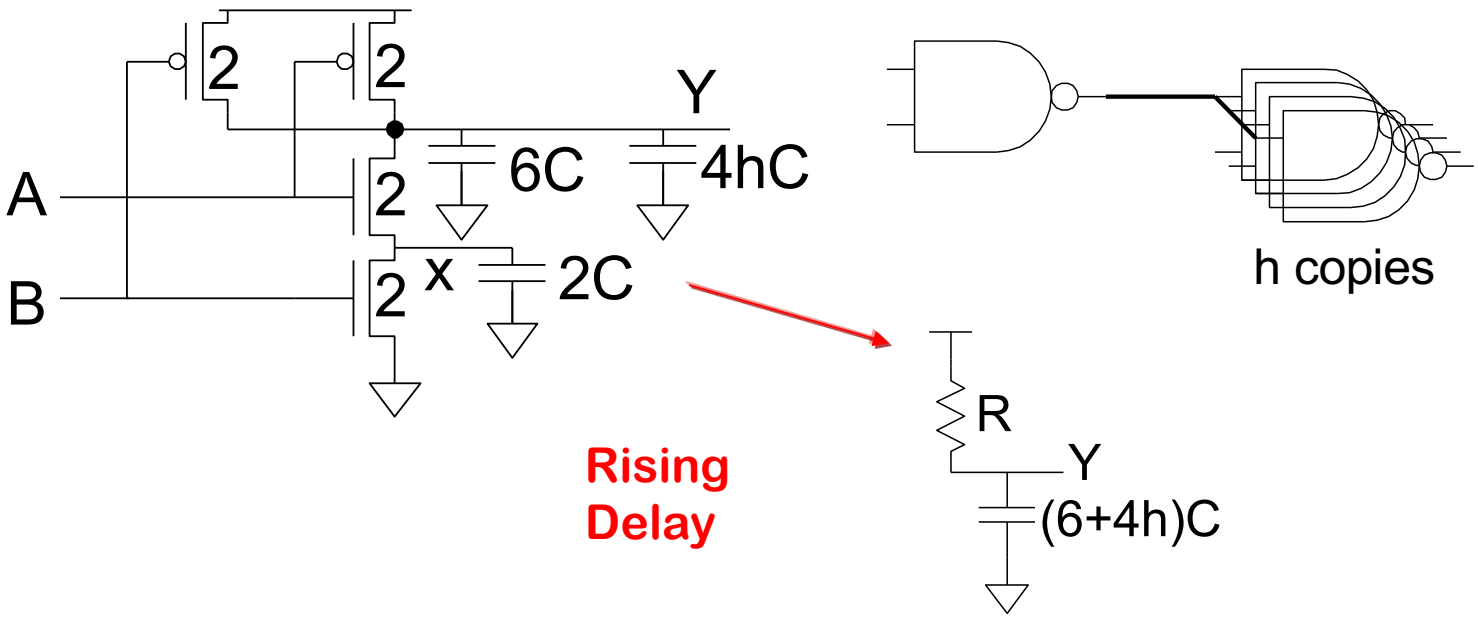

$$t_{pdr} = (6+4h)RC$$

Example: 2-input NAND

- **Estimate rising and falling propagation delays of a 2-input NAND driving *h* identical gates.**

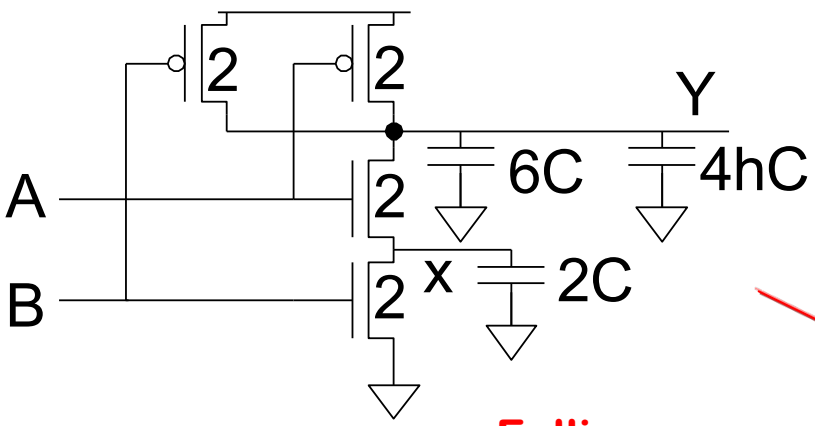

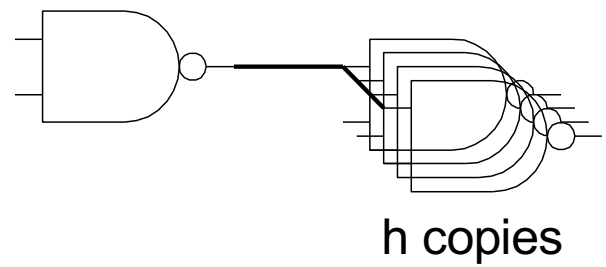

Falling Delay

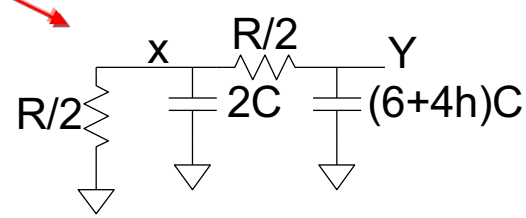

$$t_{pdf} = (2C)\left(\tfrac{R}{2}\right) + \left[(6+4h)C\right]\left(\tfrac{R}{2}+\tfrac{R}{2}\right) = (7+4h)RC$$

Delay Components

- **Delay has two parts**
  - *Parasitic delay*
    - 6 or 7 RC
    - Independent of load
  - *Effort delay (will be discussed later)*
    - 4h RC
    - Proportional to load capacitance

Contamination Delay

- Best-case (contamination) delay can be substantially less than propagation delay.
- Ex: If both inputs fall simultaneously

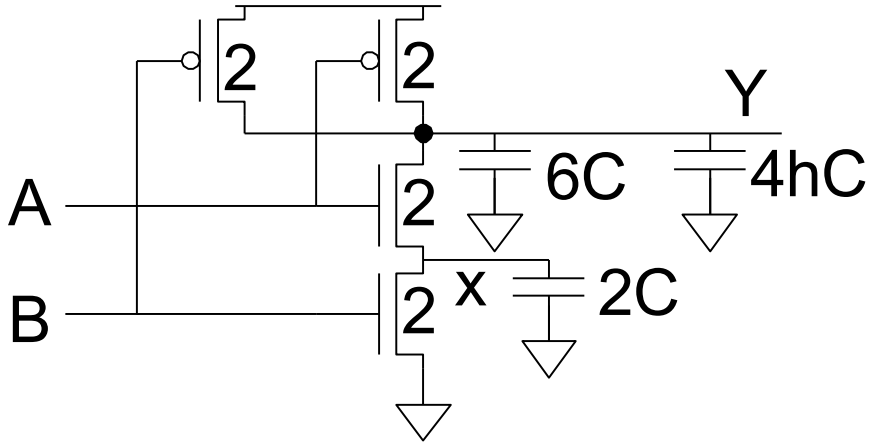

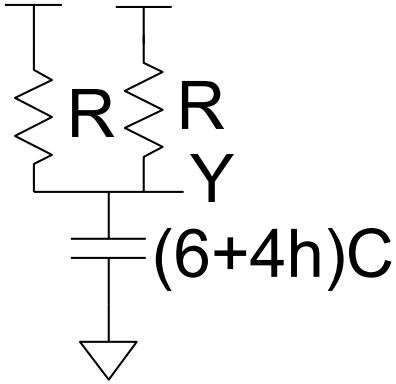

$$t_{cdr} = (3 + 2h)RC$$

Diffusion Capacitance

- **We assumed contacted diffusion on every s / d.**
- **Good layout minimizes diffusion area**
- **Ex: NAND3 layout shares one diffusion contact**
  - Reduces output capacitance by 2C
  - Merged un-contacted diffusion might help too

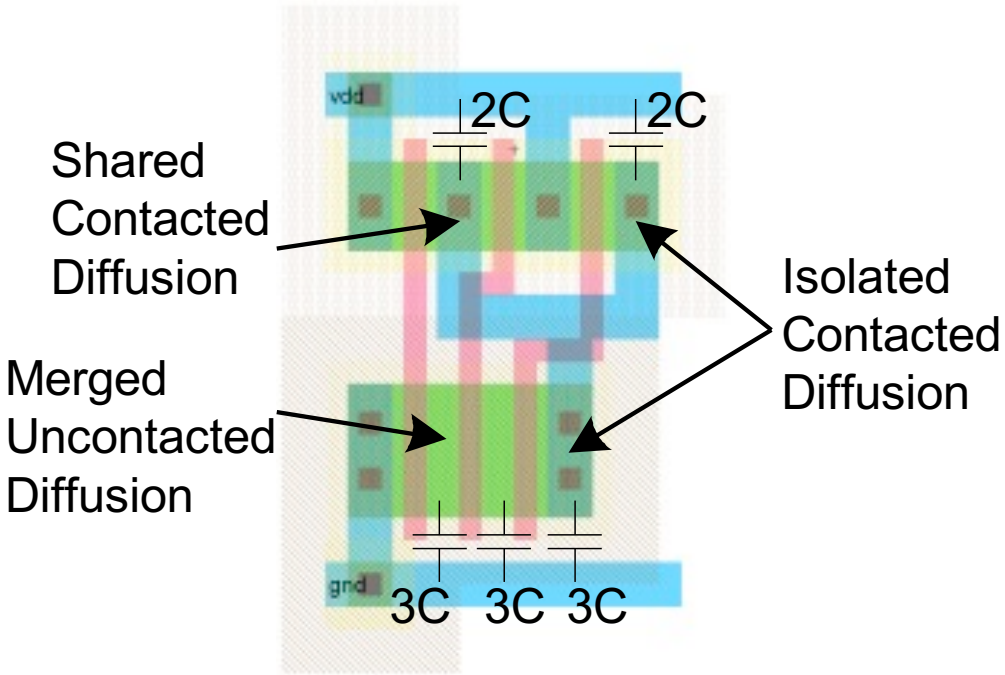

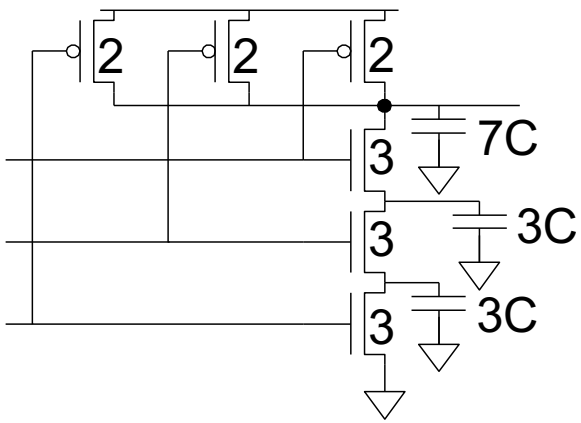

Layout Comparison
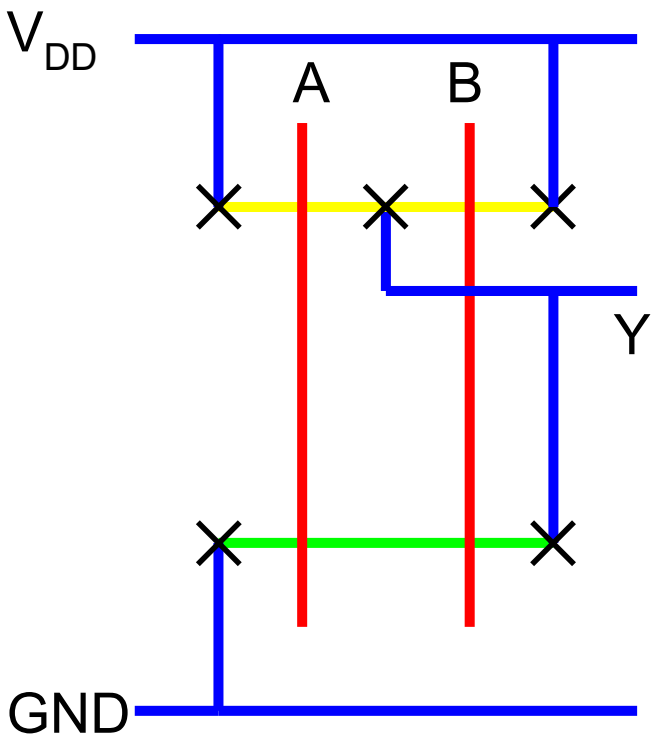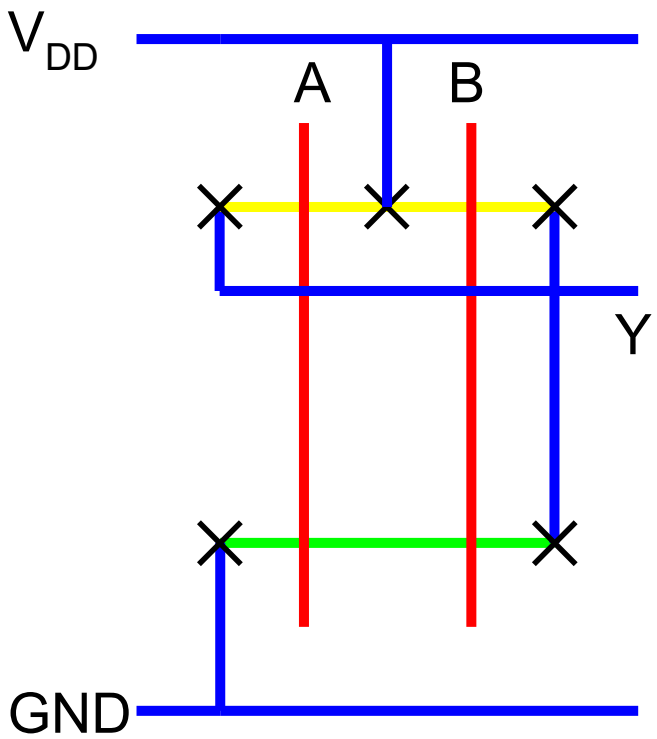
- **Which layout is better?**