Introduction to VLSI Design

Lecture 5 Logic Effort

Zhuo Feng

Outline

- **Introduction**
- **Delay in a Logic Gate**
- **Multistage Logic Networks**
- **Choosing the Best Number of Stages**
- **Example**
- **Summary**

Introduction

- **Chip designers face a bewildering array of choices**
  - What is the best circuit topology for a function?
  - How many stages of logic give least delay?
  - How wide should the transistors be?

- **Logical effort is a method to make these decisions**
  - Uses a simple model of delay
  - Allows back-of-the-envelope calculations
  - Helps make rapid comparisons between alternatives
  - Emphasizes remarkable symmetries

Delay in a Logic Gate

- **Express delays in process-independent unit**

$$d = \frac{d_{abs}}{\tau}$$

τ = 3RC

≈ 12 ps in 180 nm process

≈ 40 ps in 0.6 μm process

Delay in a Logic Gate

- **Delay has two components**

$$d = f + p$$

- **Effort delay f = *gh* (a.k.a. stage effort)**
  - *g*: *logical effort*
    - Measures relative ability of gate to deliver current
    - $g \equiv 1$ for inverter
  - *h*: *electrical effort* = C_{out} / C_{in}
    - Ratio of output to input capacitance
    - Sometimes called fanout
- **Parasitic delay p**
  - Represents delay of gate driving no load
  - Set by internal parasitic capacitance

Computing Logical Effort

- **DEF:** ***Logical effort is the ratio of the input capacitance of a gate to the input capacitance of an inverter delivering the same output current.***
- **Measure from delay vs. fanout plots**
- **Or estimate by counting transistor widths**

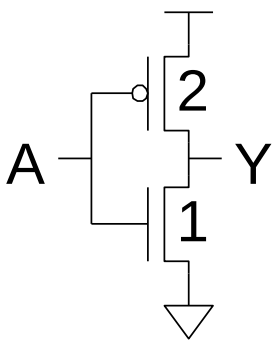

$C_{in} = 3$
$g = 3/3$

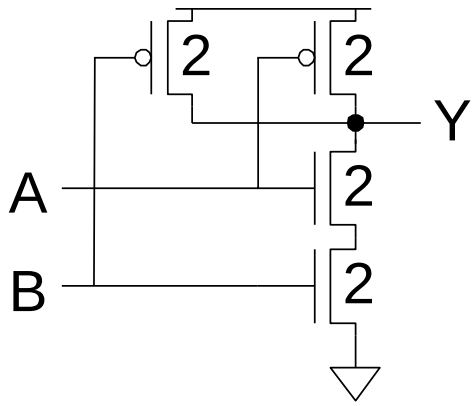

$C_{in} = 4$
$g = 4/3$

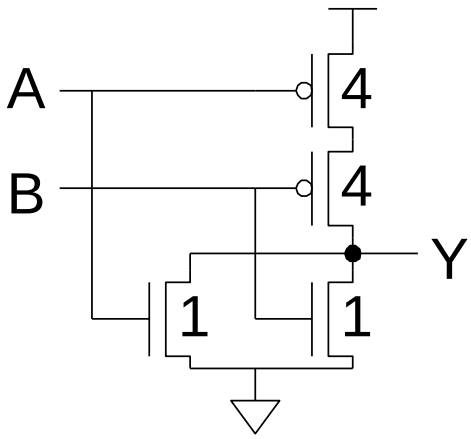

$C_{in} = 5$
$g = 5/3$

Delay Plots

$$d = f + p$$

$$= gh + p$$

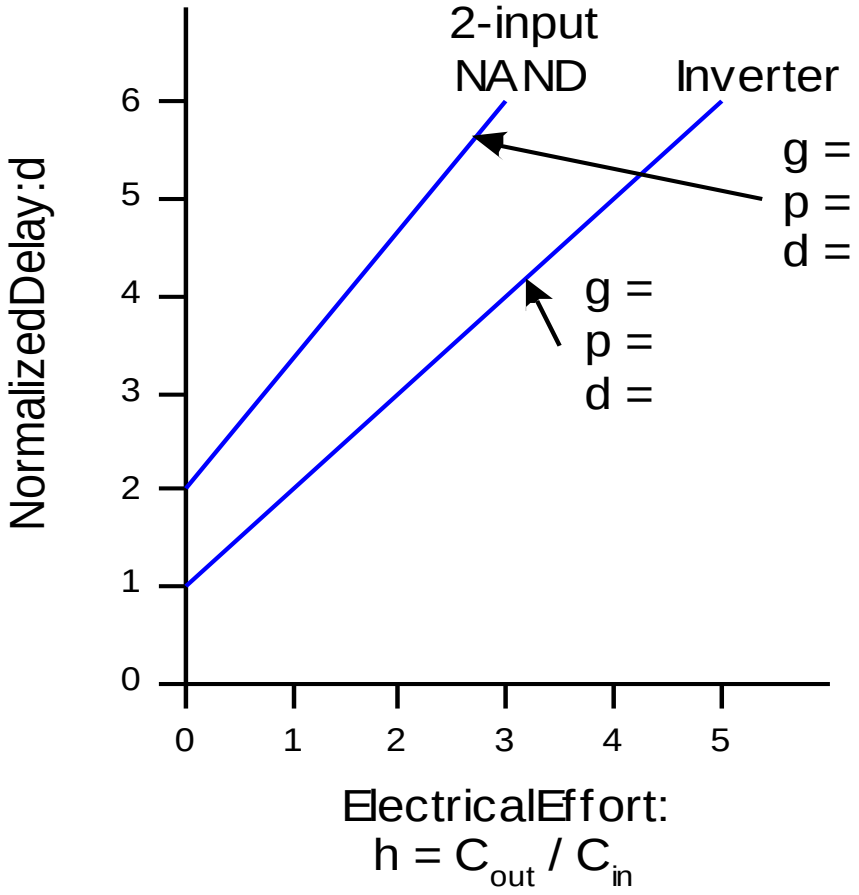

Delay Plots

$$d = f + p$$
$$= gh + p$$

- **What about NOR2?**

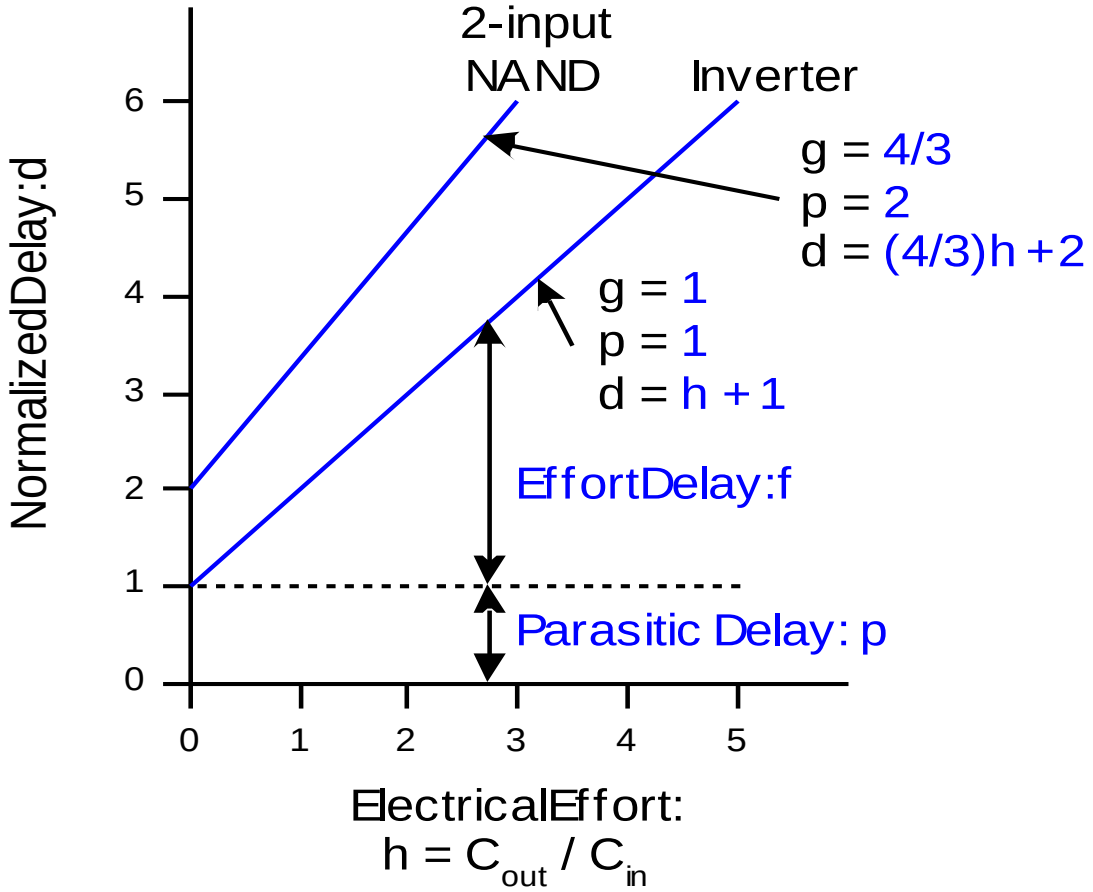

Catalog of Gates

- **Logical effort of common gates**
  - In multiples of p_{inv} (≈ 1)

Gate type	Number of inputs				
	1	2	3	4	n
Inverter	1				
NAND		4/3	5/3	6/3	(n+2)/3
NOR		5/3	7/3	9/3	(2n+1)/3
Tristate / mux	2	2	2	2	2
XOR, XNOR		4, 4	6, 12, 6	8, 16, 16, 8	

Example: Ring Oscillator

- **Estimate the frequency of an N-stage ring oscillator**

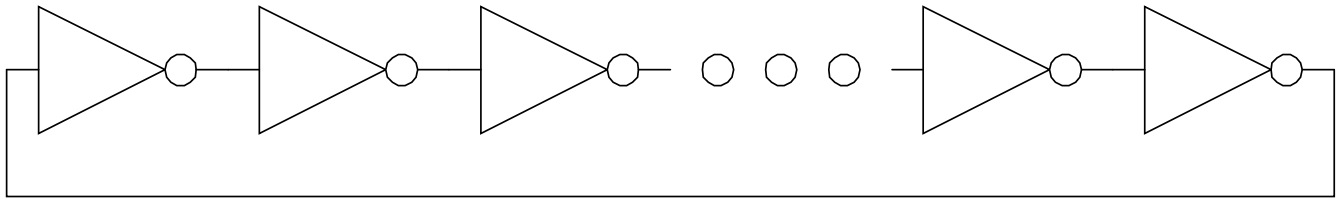

Logical Effort: $g =$

Electrical Effort: $h =$

Parasitic Delay: $p =$

Stage Delay: $d =$

Frequency: $f_{osc} =$

Example: Ring Oscillator

- **Estimate the frequency of an N-stage ring oscillator**

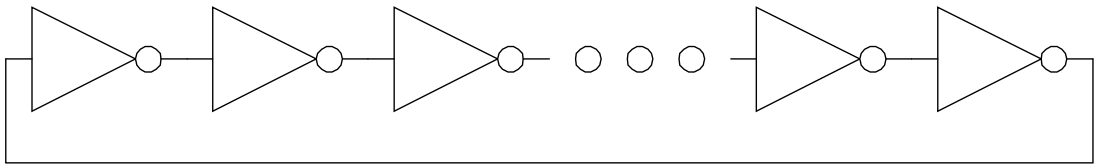

Logical Effort: g = 1

Electrical Effort: h = 1

Parasitic Delay: p = 1

Stage Delay: d = 2

$$d_{abs} = d\tau = 80\,ps$$

Frequency: f_{osc} = 1/(2*N*d) = 1/4N

τ = 3RC

≈ 12 ps in 180 nm process

≈ 40 ps in 0.6 μm process

31 stage ring oscillator in 0.6 μm process has frequency of ~ 200 MHz

Example: FO4 Inverter

- **Estimate the delay of a fanout-of-4 (FO4) inverter**

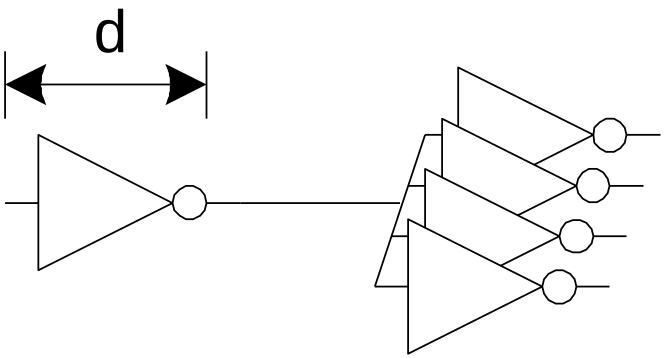

Logical Effort: g =

Electrical Effort: h =

Parasitic Delay: p =

Stage Delay: d =

Example: FO4 Inverter

- **Estimate the delay of a fanout-of-4 (FO4) inverter**

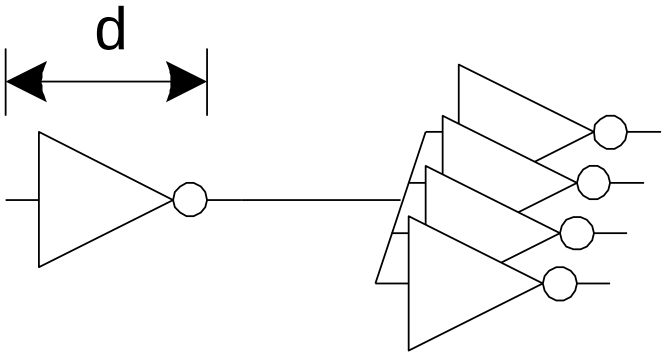

Logical Effort: g = 1

Electrical Effort: h = 4

Parasitic Delay: p = 1

Stage Delay:d = 5

The FO4 delay is about

200 ps in 0.6 μm process

60 ps in a 180 nm process

f/3 ns in an *f* μm process

Multistage Logic Networks

- **Logical effort generalizes to multistage networks**
- ***Path Logical Effort***

$$G = \prod g_i$$

- ***Path Electrical Effort***

$$H = \frac{C_{\text{out-path}}}{C_{\text{in-path}}}$$

- ***Path Effort*** $F = \prod f_i = \prod g_i h_i$

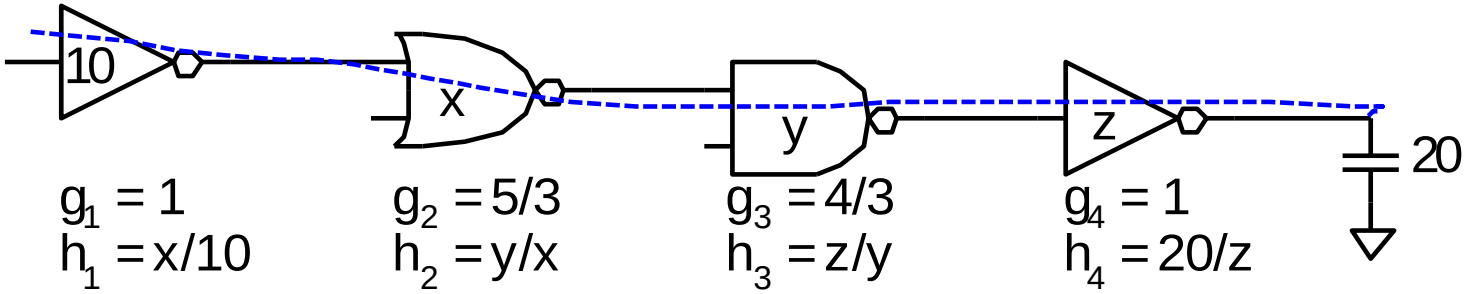

Paths that Branch

- **Can we write F = GH?**
  - No! Consider paths that branch:

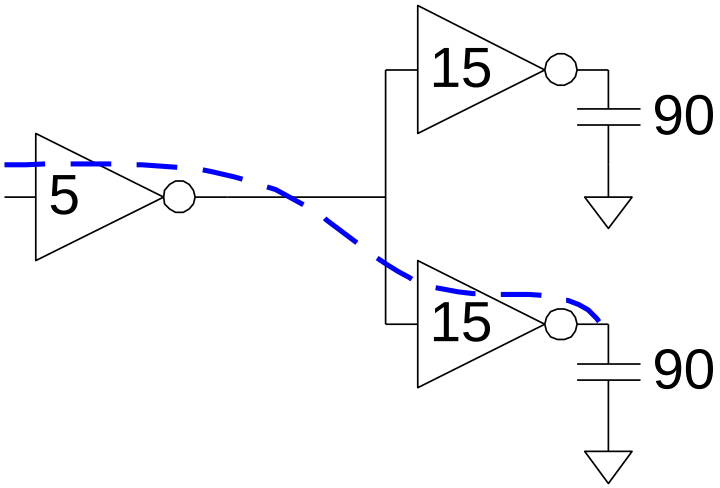

G =

H =

GH =

h_1 =

h_2 =

F = GH?

Paths that Branch

G = 1

H = 90 / 5 = 18

GH = 18

h_1 = (15 +15) / 5 = 6

h_2 = 90 / 15 = 6

F = $g_1 g_2 h_1 h_2$ = 36 = 2GH

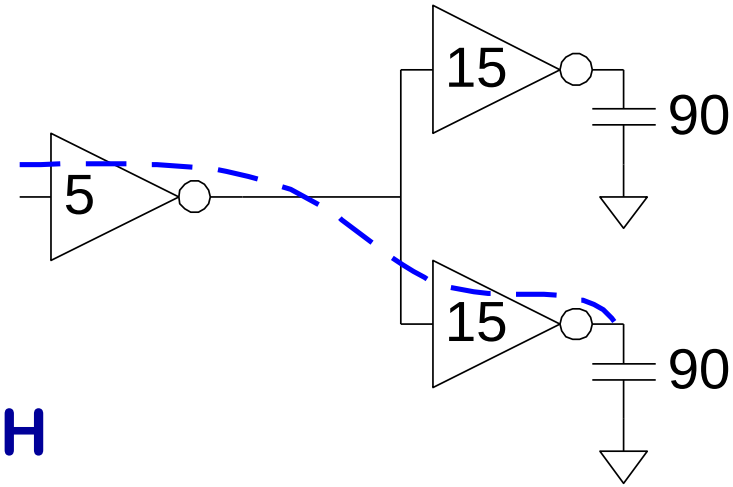

Branching Effort

- **Introduce *branching effort***
  - Accounts for branching between stages in path

$$b = \frac{C_{\text{on path}} + C_{\text{off path}}}{C_{\text{on path}}}$$

$$B = \prod b_i$$

- **Now we compute the path effort**
  - F = GBH

Note: $\prod h_i = BH$

Multistage Delays

- **Path Effort Delay**

$$D_F = \sum f_i$$

- **Path Parasitic Delay**

$$P = \sum p_i$$

- **Path Delay**

$$D = \sum d_i = D_F + P$$

Designing Fast Circuits

$$D = \sum d_i = D_F + P$$

- **Delay is smallest when each stage bears same effort**

$$\hat{f} = g_i h_i = F^{\frac{1}{N}}$$

- **Thus minimum delay of N stage path is**

$$\boxed{D = NF^{\frac{1}{N}} + P}$$

- **This is a key result of logical effort**
  - Find fastest possible delay
  - Doesn't require calculating gate sizes

Gate Sizes

- **How wide should the gates be for least delay?**

$$\hat{f} = gh = g\frac{C_{out}}{C_{in}}$$

$$\Rightarrow C_{in_i} = \frac{g_i C_{out_i}}{\hat{f}}$$

- **Working backward, apply capacitance transformation to find input capacitance of each gate given load it drives.**
- **Check work by verifying input cap spec is met.**

Example: 3-stage path

- **Select gate sizes x and y for least delay from A to B**

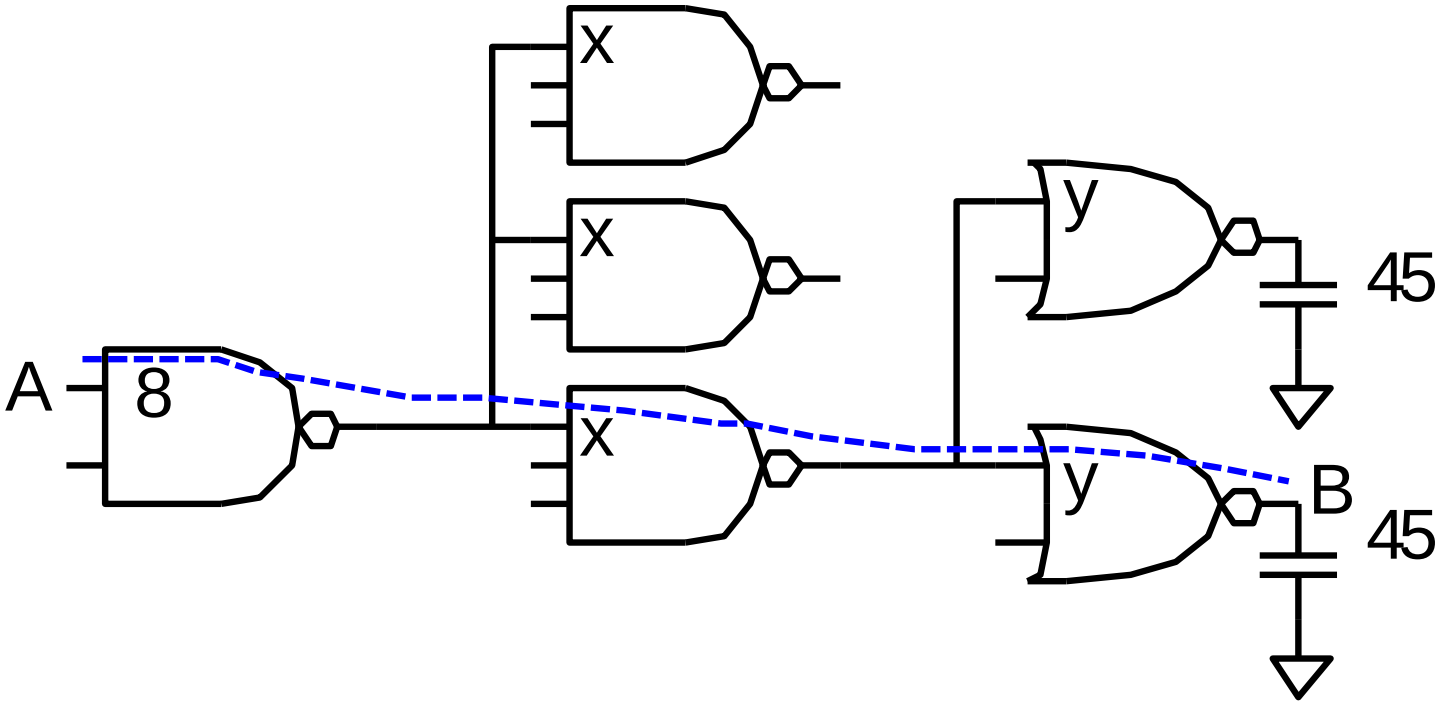

Example: 3-stage path

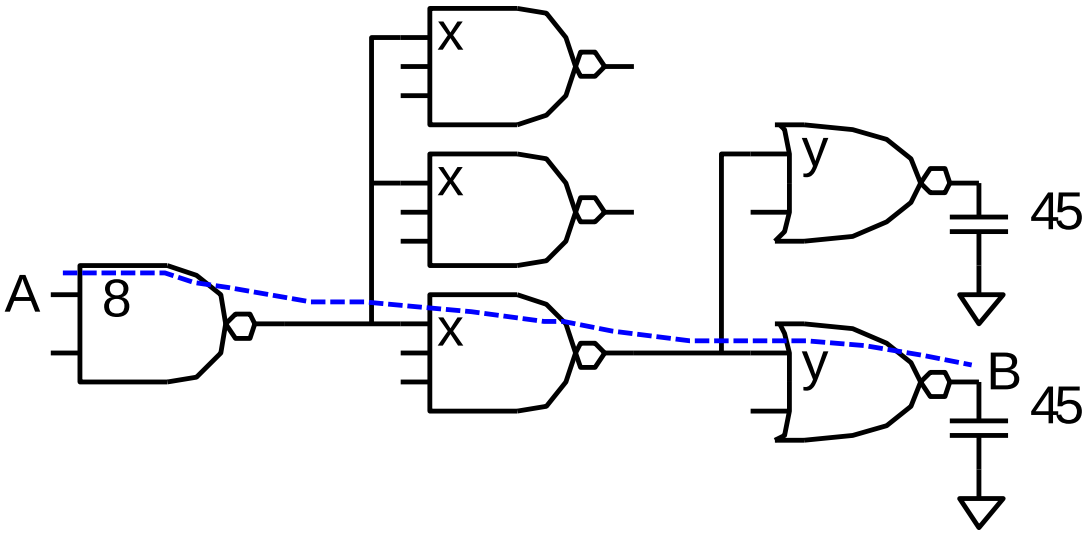

Logical Effort G =

Electrical Effort H =

Branching Effort B =

Path Effort F =

Best Stage Effort $\hat{f} =$

Parasitic Delay P =

Delay D =

Example: 3-stage path

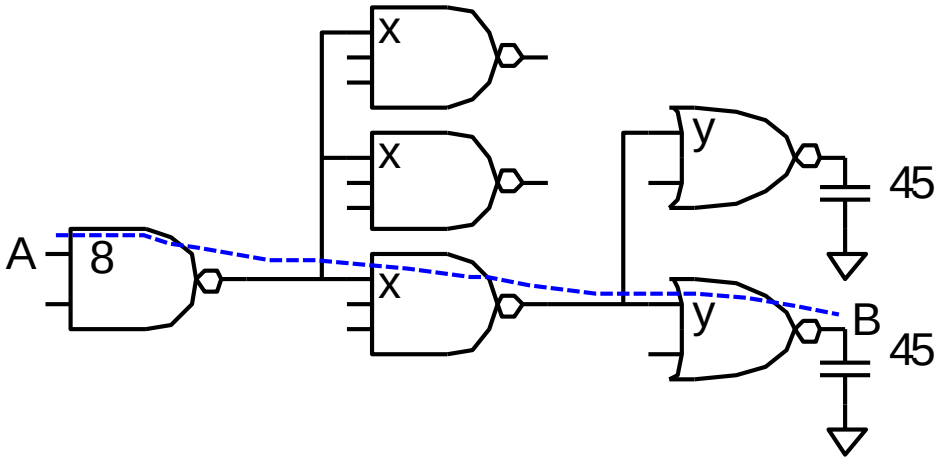

Logical Effort G = (4/3)*(5/3)*(5/3) = 100/27

Electrical Effort H = 45/8

Branching Effort B = 3 * 2 = 6

Path Effort F = GBH = 125

Best Stage Effort $\hat{f} = \sqrt[3]{F} = 5$

Parasitic Delay P = 2 + 3 + 2 = 7

Delay D = 3*5 + 7 = 22 = 4.4 FO4

Example: 3-stage path

- **Work backward for sizes**

  y =

  x =

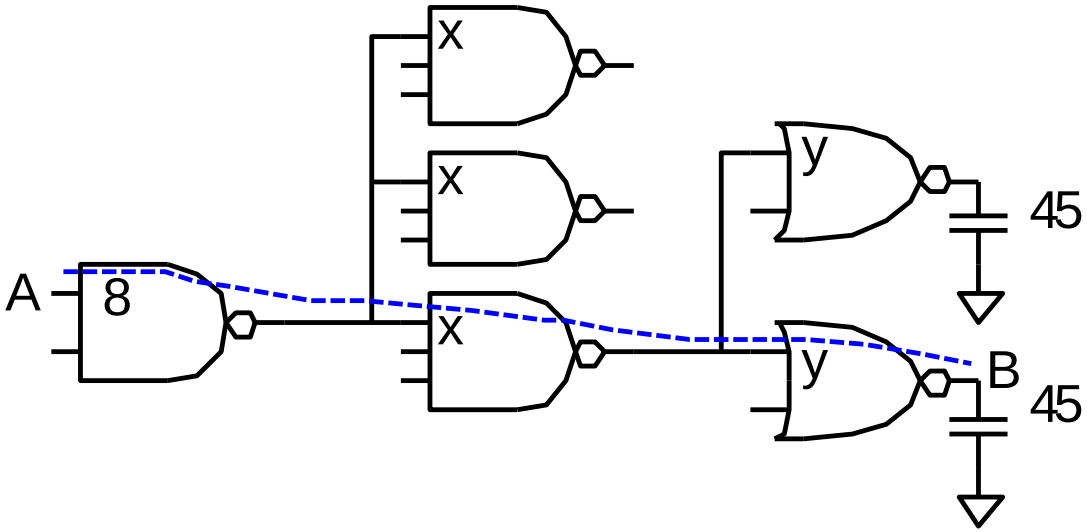

Example: 3-stage path

- **Work backward for sizes**

  y = 45 * (5/3) / 5 = 15

  x = (15*2) * (5/3) / 5 = 10

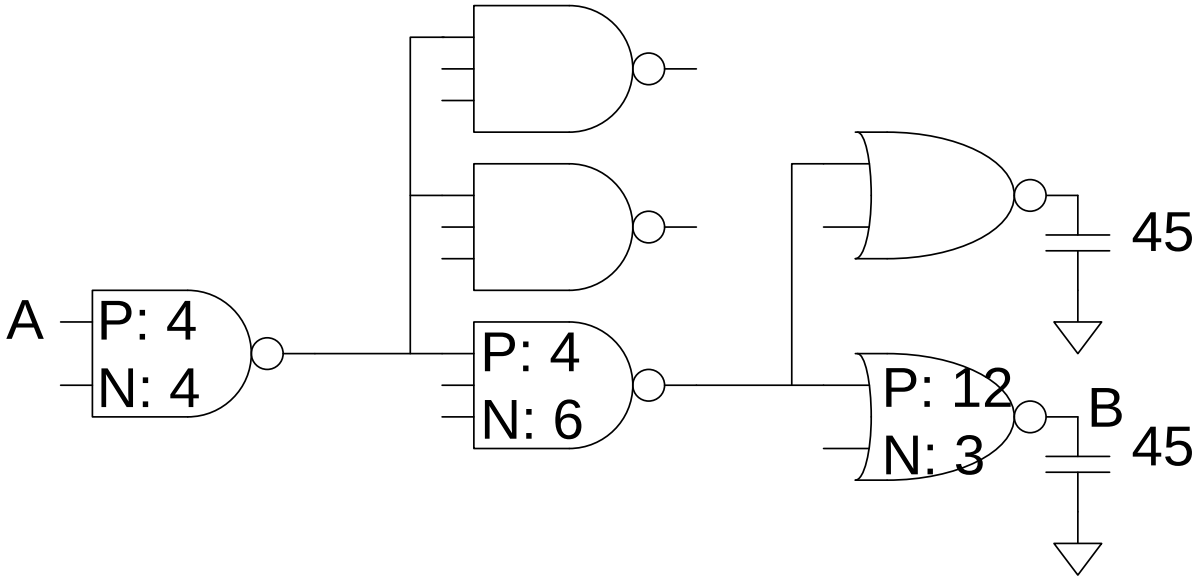

Best Number of Stages

- **How many stages should a path use?**
  - Minimizing number of stages is not always fastest
- **Example: drive 64-bit datapath with unit inverter**

D =

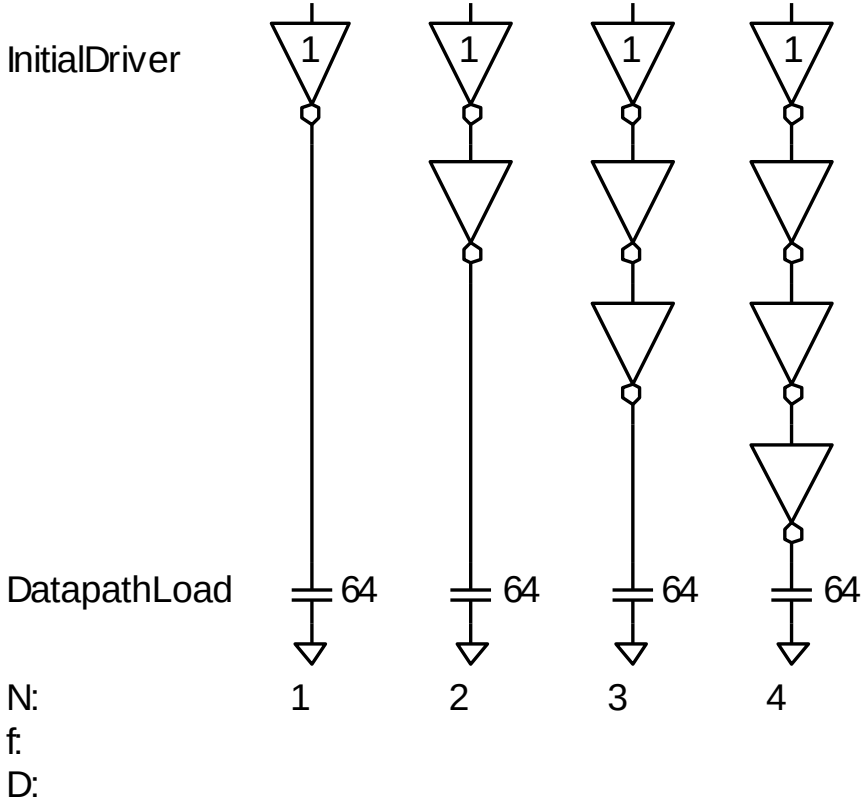

Best Number of Stages

- **How many stages should a path use?**
  - Minimizing number of stages is not always fastest
- **Example: drive 64-bit datapath with unit inverter**

$$D = NF^{1/N} + P$$
$$= N(64)^{1/N} + N$$

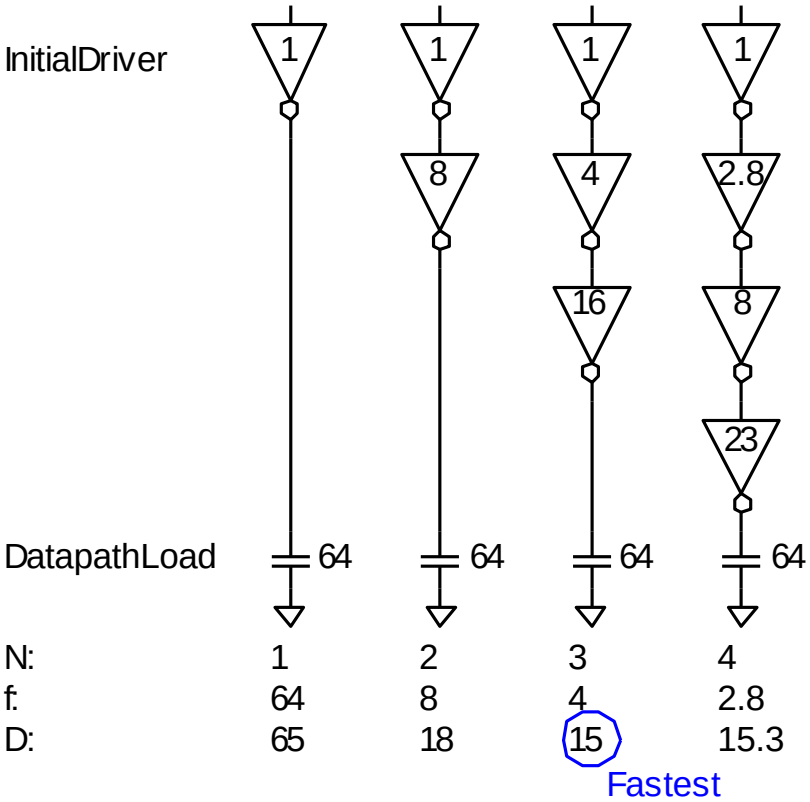

Best number of stages: $\approx N = \log_4 F$

Review of Definitions

Term	**Stage**	**Path**
number of stages	1	N
logical effort	g	$G = \prod g_i$
electrical effort	$h = \frac{C_{\text{out}}}{C_{\text{in}}}$	$H = \frac{C_{\text{out-path}}}{C_{\text{in-path}}}$
branching effort	$b = \frac{C_{\text{on-path}} + C_{\text{off-path}}}{C_{\text{on-path}}}$	$B = \prod b_i$
effort	$f = gh$	$F = GBH$
effort delay	f	$D_F = \sum f_i$
parasitic delay	p	$P = \sum p_i$
delay	$d = f + p$	$D = \sum d_i = D_F + P$

Method of Logical Effort

1) **Compute path effort** $F = GBH$
2) **Estimate best number of stages** $N = \log_4 F$
3) **Sketch path with N stages**
4) **Estimate least delay** $D = NF^{\frac{1}{N}} + P$
5) **Determine best stage effort** $\hat{f} = F^{\frac{1}{N}}$
6) **Find gate sizes** $C_{in_i} = \dfrac{g_i C_{out_i}}{\hat{f}}$

Limits of Logical Effort

- **Chicken and egg problem**
  - Need path to compute G
  - But don’t know number of stages without G
- **Simplistic delay model**
  - Neglects input rise time effects
- **Interconnect**
  - Iteration required in designs with wire
- **Maximum speed only**
  - Not minimum area/power for constrained delay