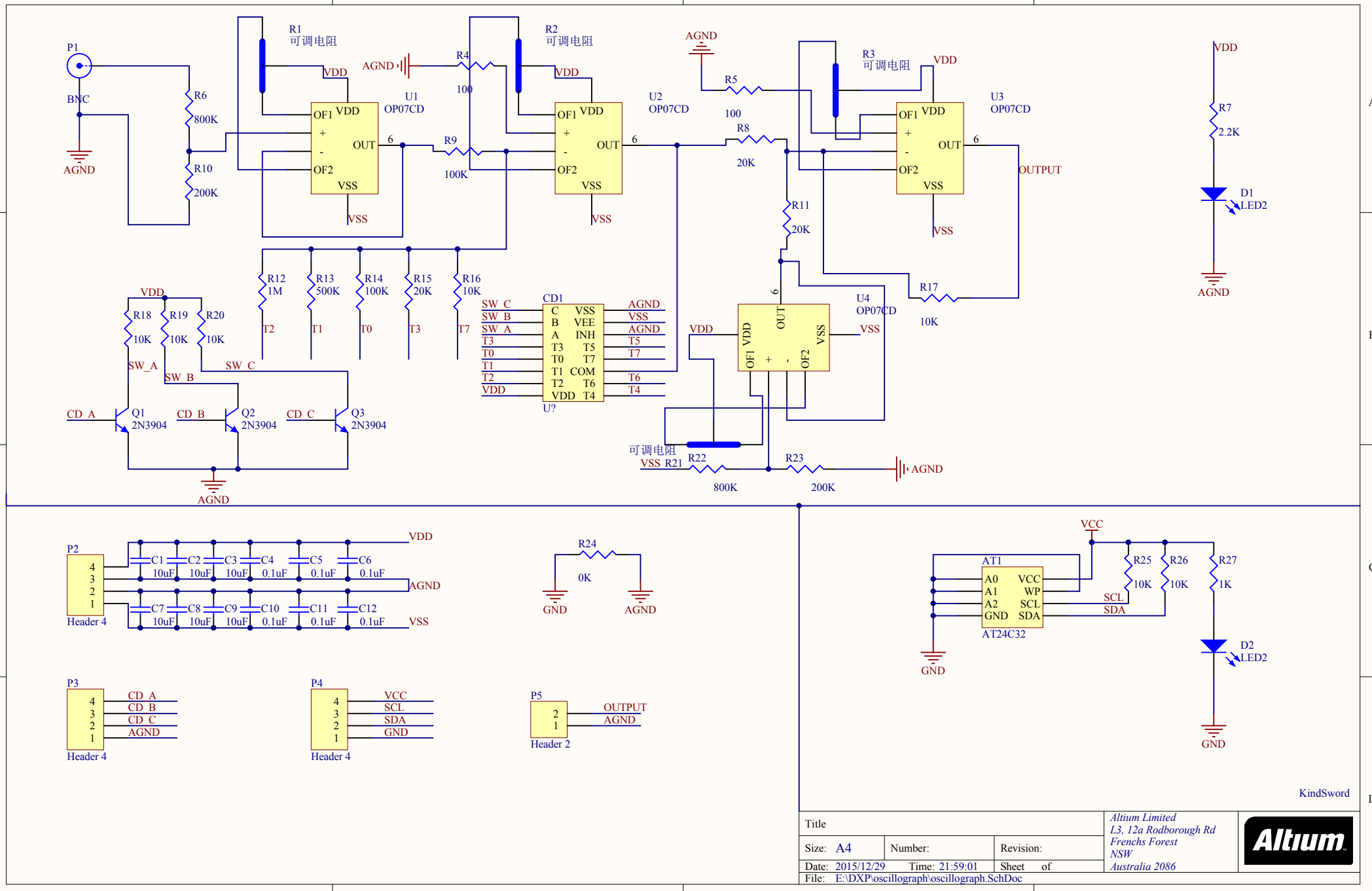
P1
BNC
AGND
R6
800K
R10
200K
R1
可调电阻
VDD
OF1
OF2
OUT
VSS
U1
OP07CD
R4
100
R9
100K
R2
可调电阻
U2
OP07CD
R5
100
R8
20K
R3
可调电阻
U3
OP07CD
OUTPUT
R7
2.2K
D1
LED2
R11
20K
R17
10K
U4
OP07CD
R12
1M
R13
500K
R14
100K
R15
20K
R16
10K
T2
T1
T0
T3
T7
R18
R19
R20
10K
SW_A
SW_B
SW_C
CD_A
CD_B
CD_C
Q1
2N3904
Q2
2N3904
Q3
2N3904
CD1
U?
C
B
A
T3
T0
T1
T2
VDD
VSS
INH
T5
T7
COM
T6
T4
R21
R22
800K
R23
200K
P2
Header 4
C1
C2
C3
C4
C5
C6
C7
C8
C9
C10
C11
C12
10uF
0.1uF
R24
0K
GND
P3
P4
P5
Header 2
VCC
SCL
SDA
AT1
AT24C32
A0
A1
A2
WP
R25
R26
R27
1K
D2
LED2
KindSword
Title
Size: A4
Number:
Revision:
Date: 2015/12/29
Time: 21:59:01
Sheet of
File: E:\DXP\oscillograph\oscillograph.SchDoc
Altium Limited
L3, 12a Rodborough Rd
Frenchs Forest
NSW
Australia 2086
Altium