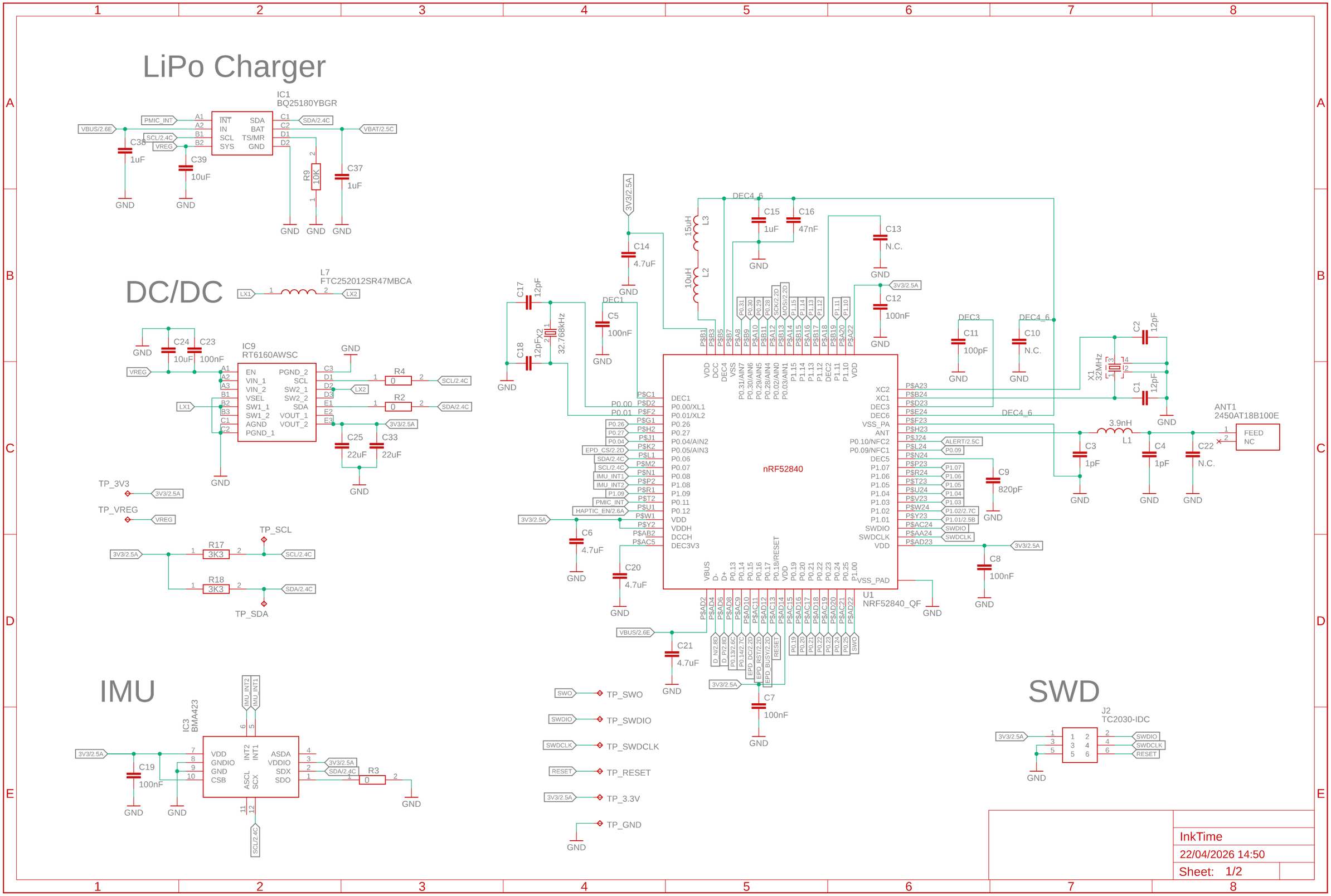

22/04/2026 14:52 (Sheet:)

E-Paper Drive Circuit

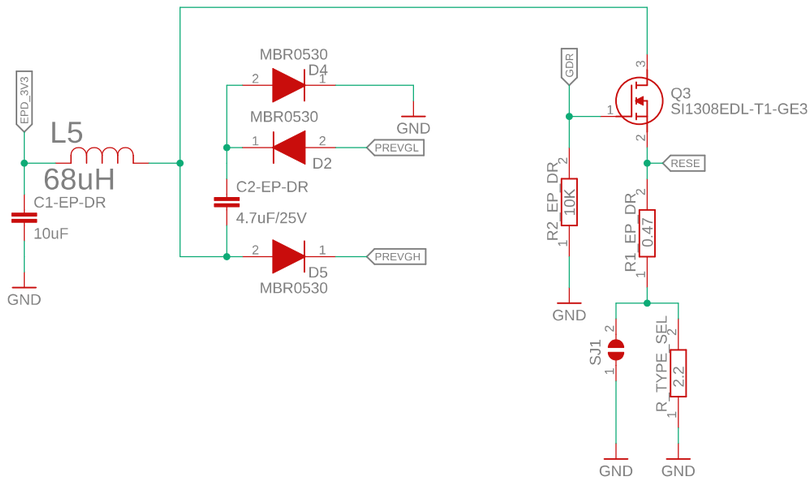

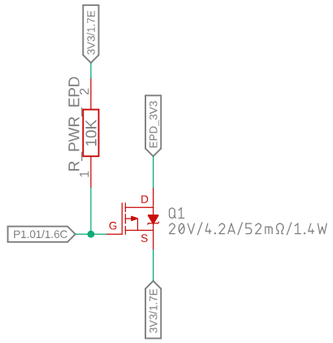

Haptic Driver

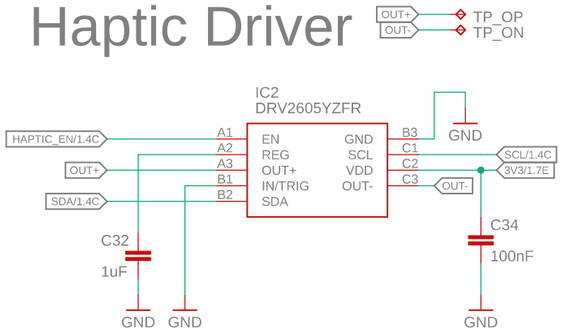

Fuel Gauge

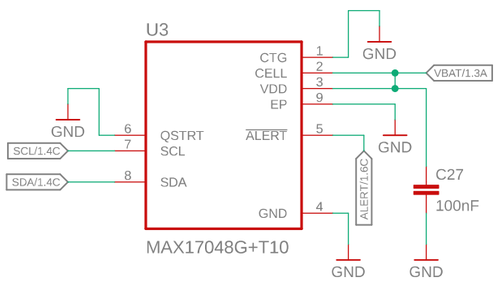

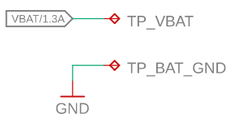

Buttons

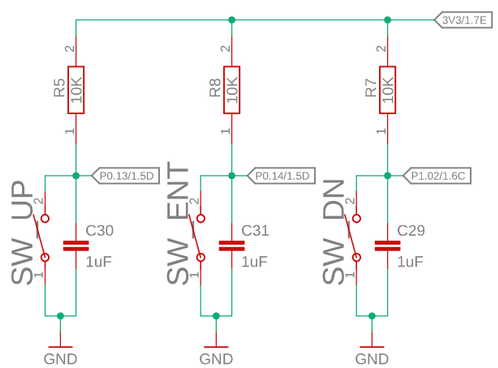

E-Paper Display Connector

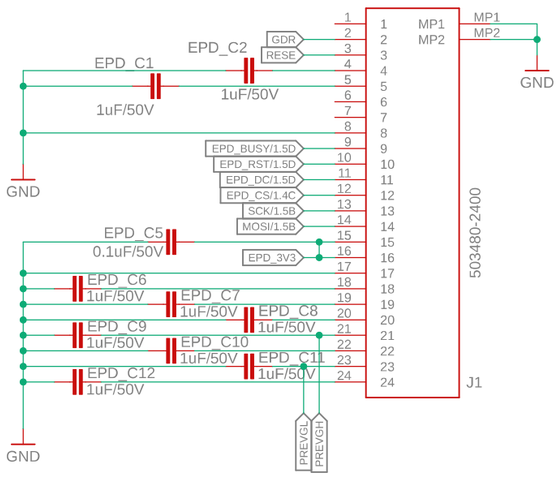

USB C Connector & ESD Protection

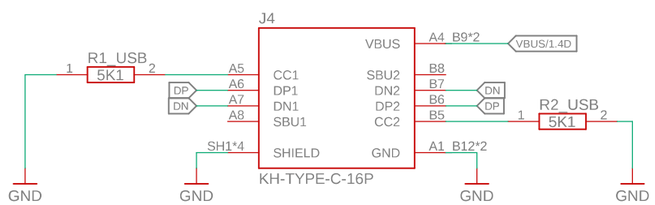

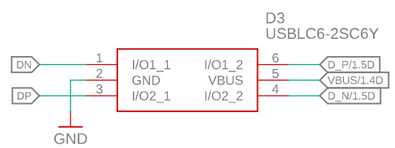

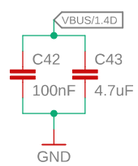

InkTime	
22/04/2026 14:50	
Sheet: 2/2	