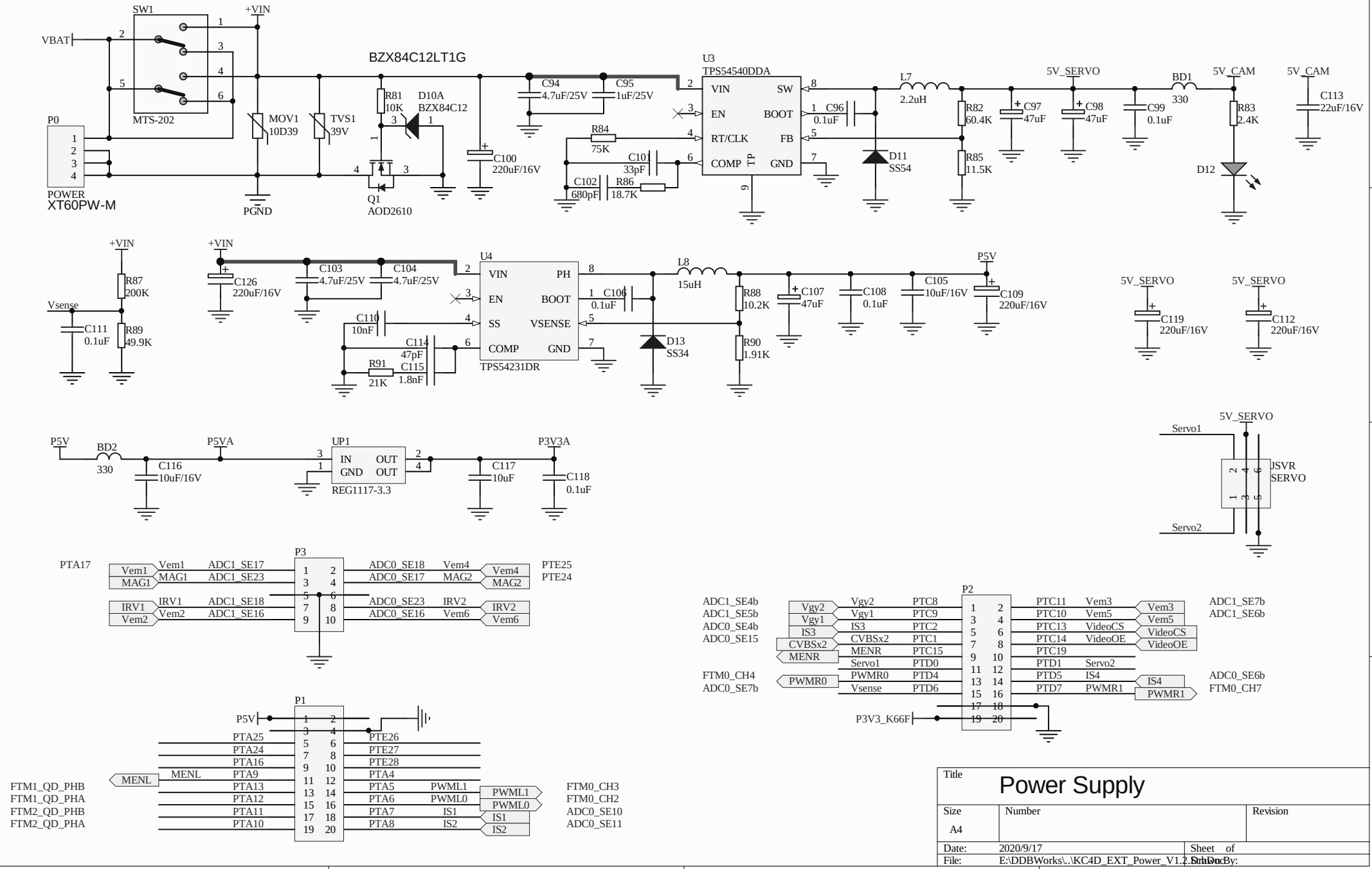
SW1
MTS-202
VBAT
+VIN
P0
POWER
XT60PW-M
PGND
MOV1
10D39
TVS1
39V
R81
10K
D10A
BZX84C12
BZX84C12LT1G
Q1
AOD2610
C100
220uF/16V
C94
4.7uF/25V
C95
1uF/25V
R84
75K
C101
33pF
C102
680pF
R86
18.7K
U3
TPS54540DDA
VIN
SW
EN
BOOT
RT/CLK
FB
COMP
TP
GND
C96
0.1uF
L7
2.2uH
D11
SS54
R82
60.4K
R85
11.5K
C97
47uF
C98
47uF
C99
0.1uF
5V_SERVO
BD1
330
5V_CAM
R83
2.4K
D12
5V_CAM
C113
22uF/16V
R87
200K
Vsense
C111
0.1uF
R89
49.9K
C126
220uF/16V
C103
4.7uF/25V
C104
4.7uF/25V
C110
10nF
C114
47pF
R91
21K
C115
1.8nF
U4
VIN
PH
EN
BOOT
SS
VSENSE
COMP
GND
TPS54231DR
C106
0.1uF
L8
15uH
D13
SS34
R88
10.2K
R90
1.91K
C107
47uF
C108
0.1uF
C105
10uF/16V
P5V
C109
220uF/16V
5V_SERVO
C119
220uF/16V
5V_SERVO
C112
220uF/16V
P5V
BD2
330
C116
10uF/16V
P5VA
UP1
IN
OUT
GND
OUT
REG1117-3.3
C117
10uF
P3V3A
C118
0.1uF
5V_SERVO
Servo1
JSVR
SERVO
Servo2
PTA17
P3
Vem1
MAG1
IRV1
Vem2
ADC1_SE17
ADC1_SE23
ADC1_SE18
ADC1_SE16
ADC0_SE18
ADC0_SE17
ADC0_SE23
ADC0_SE16
Vem4
MAG2
IRV2
Vem6
PTE25
PTE24
ADC1_SE4b
ADC1_SE5b
ADC0_SE4b
ADC0_SE15
P2
Vgy2
Vgy1
IS3
CVBSx2
MENR
Servo1
PWMR0
Vsense
PTC8
PTC9
PTC2
PTC1
PTC15
PTD0
PTD4
PTD6
PTC11
PTC10
PTC13
PTC14
PTC19
PTD1
PTD5
PTD7
Vem3
Vem5
VideoCS
VideoOE
Servo2
IS4
PWMR1
ADC1_SE7b
ADC1_SE6b
ADC0_SE6b
FTM0_CH7
FTM0_CH4
ADC0_SE7b
P3V3_K66F
P1
P5V
PTA25
PTA24
PTA16
PTA9
PTA13
PTA12
PTA11
PTA10
PTA5
PTA6
PTA7
PTA8
PTE26
PTE27
PTE28
PTA4
PWML1
PWML0
IS1
IS2
MENL
FTM1_QD_PHB
FTM1_QD_PHA
FTM2_QD_PHB
FTM2_QD_PHA
FTM0_CH3
FTM0_CH2
ADC0_SE10
ADC0_SE11
Title
Power Supply
Size
A4
Number
Revision
Date:
2020/9/17
Sheet of
File:
E:\DDBWorks\..\KC4D_EXT_Power_V1.2.SchDoc
Drawn By:

G1=1+85K/17K=4

G1=1+84.5K/16.2K=6.216

G2=200K/10K=20

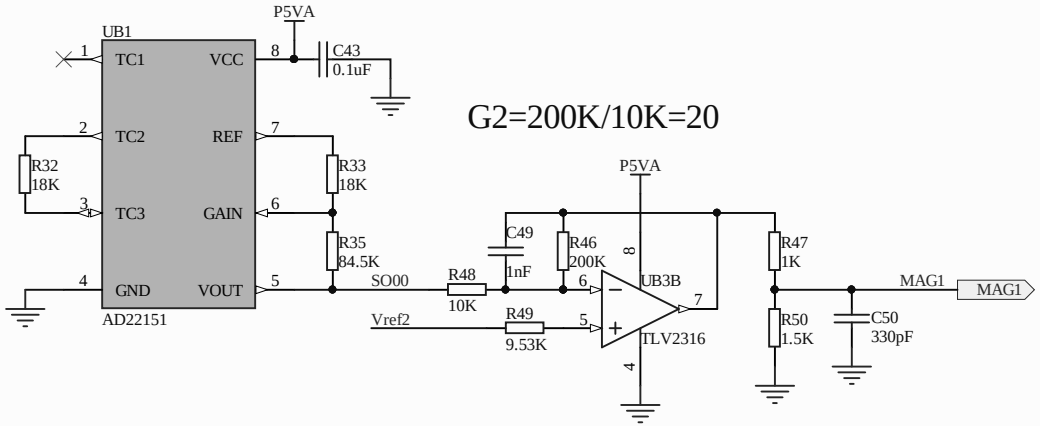

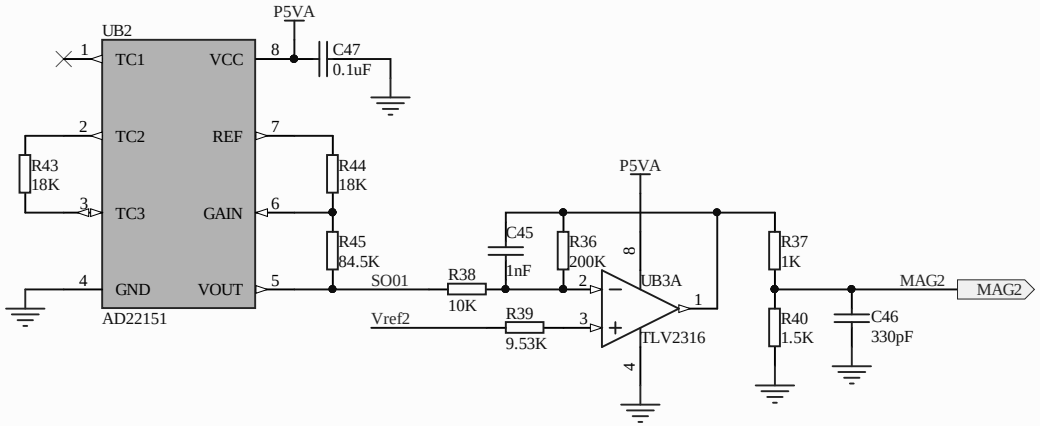

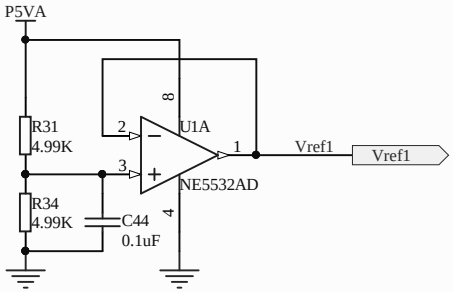

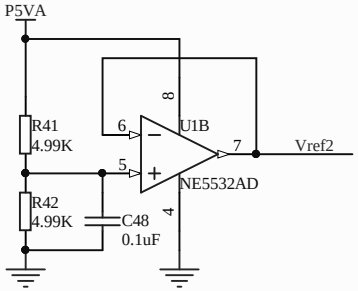

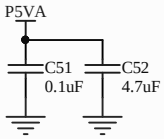

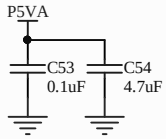

Title: Magnetic		
Size: A4	Number:	Revision:
Date: 2020/9/17		Sheet of
File: E:\DDBWorks\..\KC4D_EXT_MAG_V1.2.SchDoc		Drawn By:

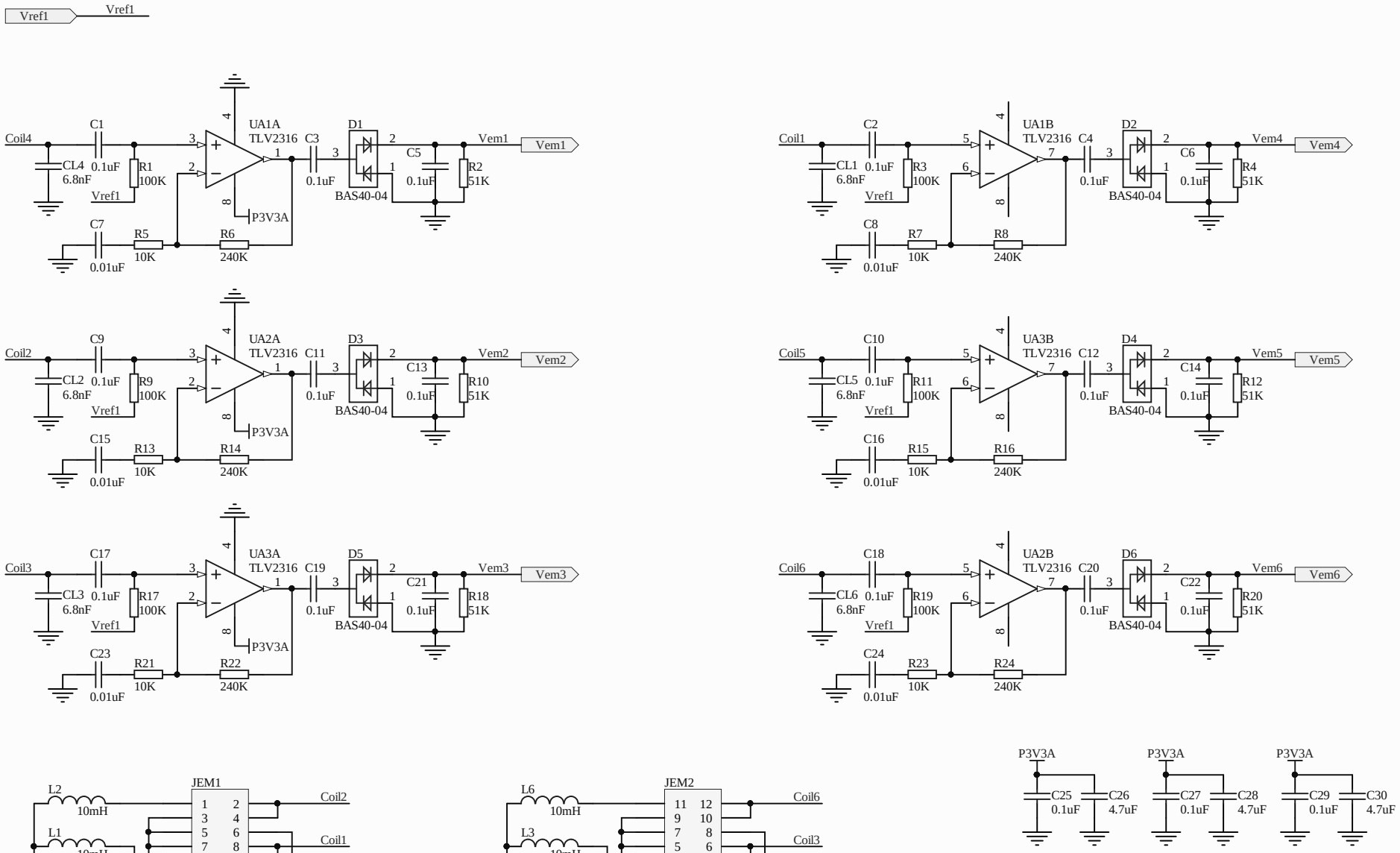
Vref1
Vref1
Coil4
C1
CL4
6.8nF
0.1uF
R1
100K
Vref1
UA1A
TLV2316
C3
0.1uF
D1
BAS40-04
C5
0.1uF
R2
51K
Vem1
Vem1
C7
0.01uF
R5
10K
R6
240K
P3V3A
Coil1
C2
CL1
6.8nF
0.1uF
R3
100K
Vref1
UA1B
TLV2316
C4
0.1uF
D2
BAS40-04
C6
0.1uF
R4
51K
Vem4
Vem4
C8
0.01uF
R7
10K
R8
240K
Coil2
C9
CL2
6.8nF
0.1uF
R9
100K
Vref1
UA2A
TLV2316
C11
0.1uF
D3
BAS40-04
C13
0.1uF
R10
51K
Vem2
Vem2
C15
0.01uF
R13
10K
R14
240K
P3V3A
Coil5
C10
CL5
6.8nF
0.1uF
R11
100K
Vref1
UA3B
TLV2316
C12
0.1uF
D4
BAS40-04
C14
0.1uF
R12
51K
Vem5
Vem5
C16
0.01uF
R15
10K
R16
240K
Coil3
C17
CL3
6.8nF
0.1uF
R17
100K
Vref1
UA3A
TLV2316
C19
0.1uF
D5
BAS40-04
C21
0.1uF
R18
51K
Vem3
Vem3
C23
0.01uF
R21
10K
R22
240K
P3V3A
Coil6
C18
CL6
6.8nF
0.1uF
R19
100K
Vref1
UA2B
TLV2316
C20
0.1uF
D6
BAS40-04
C22
0.1uF
R20
51K
Vem6
Vem6
C24
0.01uF
R23
10K
R24
240K
L2
10mH
L1
10mH
L4
10mH
JEM1
1 2
3 4
5 6
7 8
9 10
11 12
EMG1
Coil2
Coil1
Coil4
L6
10mH
L3
10mH
L5
10mH
JEM2
11 12
9 10
7 8
5 6
3 4
1 2
EMG2
Coil6
Coil3
Coil5
P3V3A
C25
0.1uF
C26
4.7uF
P3V3A
C27
0.1uF
C28
4.7uF
P3V3A
C29
0.1uF
C30
4.7uF
Title
Electro-Magnetic
Size
A4
Number
Revision
Date:
2020/9/17
Sheet of
File:
E:\DDBWorks\..\KC4D_EXT_EM_V1.2.SchDoc
Drawn By:

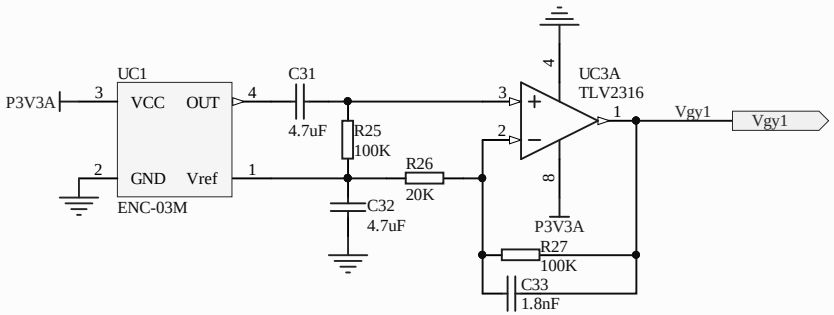

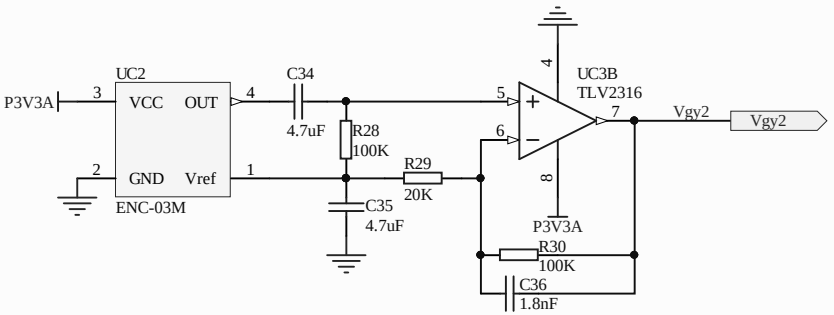

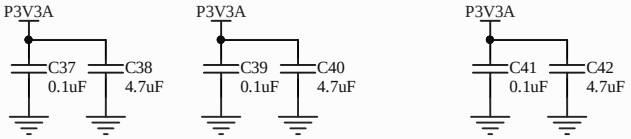

TBD: MPU6050 on MCU Board

Title: Gyro		
Size: A4	Number:	Revision:
Date: 2020/9/17		Sheet of
File: E:\DDBWorks\..\KC4D_EXT_GYRO_V1.2.SchDoc		Drawn By:

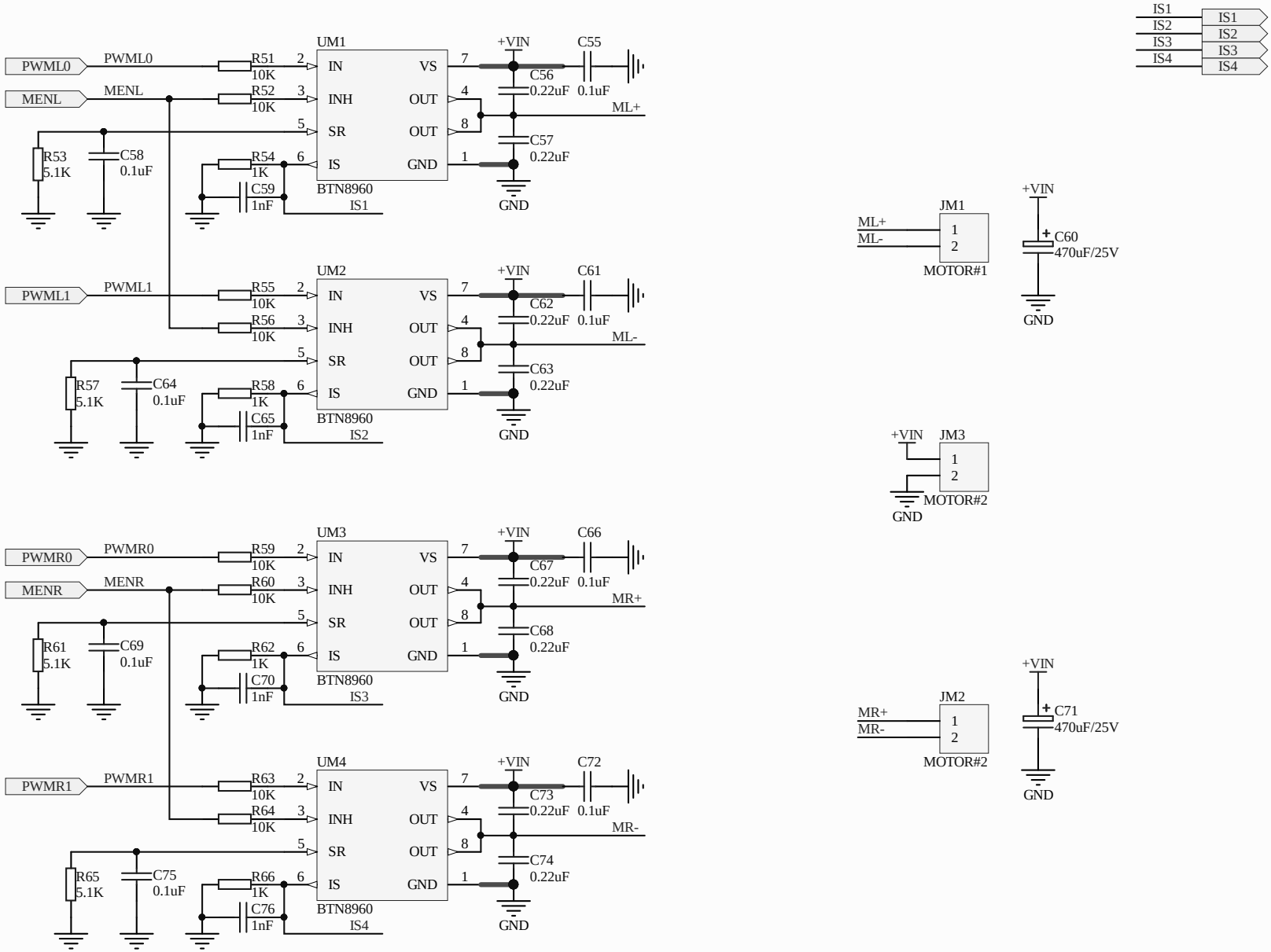

Title	Motor Driver	
Size: A	Number:	Revision:
Date: 2020/9/17	Sheet of	
File: E:\DDBWorks\..\KC4D_EXT_MOTOR_V1.2.SchDoc	Drawn By:	

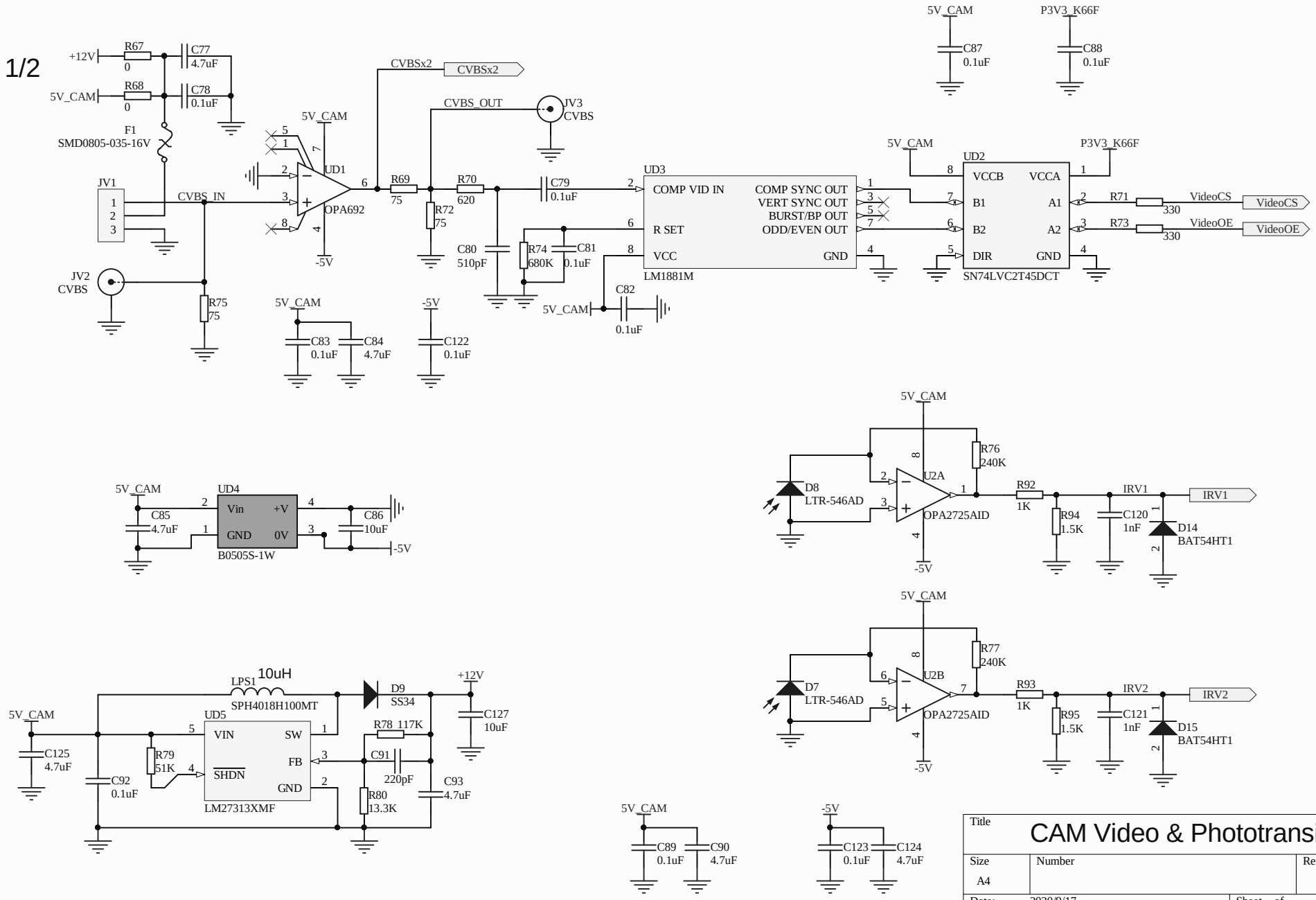
1/2
+12V
R67
0
C77
4.7uF
5V_CAM
R68
0
C78
0.1uF
F1
SMD0805-035-16V
JV1
CVBS_IN
JV2
CVBS
R75
75
5V_CAM
UD1
OPA692
-5V
CVBSx2
CVBS_OUT
JV3
CVBS
R69
75
R70
620
R72
75
C80
510pF
C79
0.1uF
R74
680K
C81
0.1uF
C82
0.1uF
UD3
COMP VID IN
R SET
VCC
COMP SYNC OUT
VERT SYNC OUT
BURST/BP OUT
ODD/EVEN OUT
GND
LM1881M
C83
0.1uF
C84
4.7uF
C122
0.1uF
C87
0.1uF
C88
0.1uF
P3V3_K66F
UD2
VCCB
VCCA
B1
A1
B2
A2
DIR
GND
SN74LVC2T45DCT
R71
330
R73
330
VideoCS
VideoOE
UD4
Vin
+V
GND
0V
B0505S-1W
C85
4.7uF
C86
10uF
D8
LTR-546AD
U2A
OPA2725AID
R76
240K
R92
1K
R94
1.5K
C120
1nF
IRV1
D14
BAT54HT1
D7
LTR-546AD
U2B
OPA2725AID
R77
240K
R93
1K
R95
1.5K
C121
1nF
IRV2
D15
BAT54HT1
LPS1
10uH
SPH4018H100MT
D9
SS34
+12V
C127
10uF
UD5
VIN
SW
FB
SHDN
GND
LM27313XMF
R78 117K
C91
220pF
R80
13.3K
C93
4.7uF
C125
4.7uF
C92
0.1uF
R79
51K
C89
0.1uF
C90
4.7uF
C123
0.1uF
C124
4.7uF
Title
CAM Video & Phototransistor
Size
A4
Number
Revision
Date:
2020/9/17
Sheet of
File:
E:\DDBWorks\..\KC4D_EXT_PHOTO_V1.2.SchDoc
Drawn By:

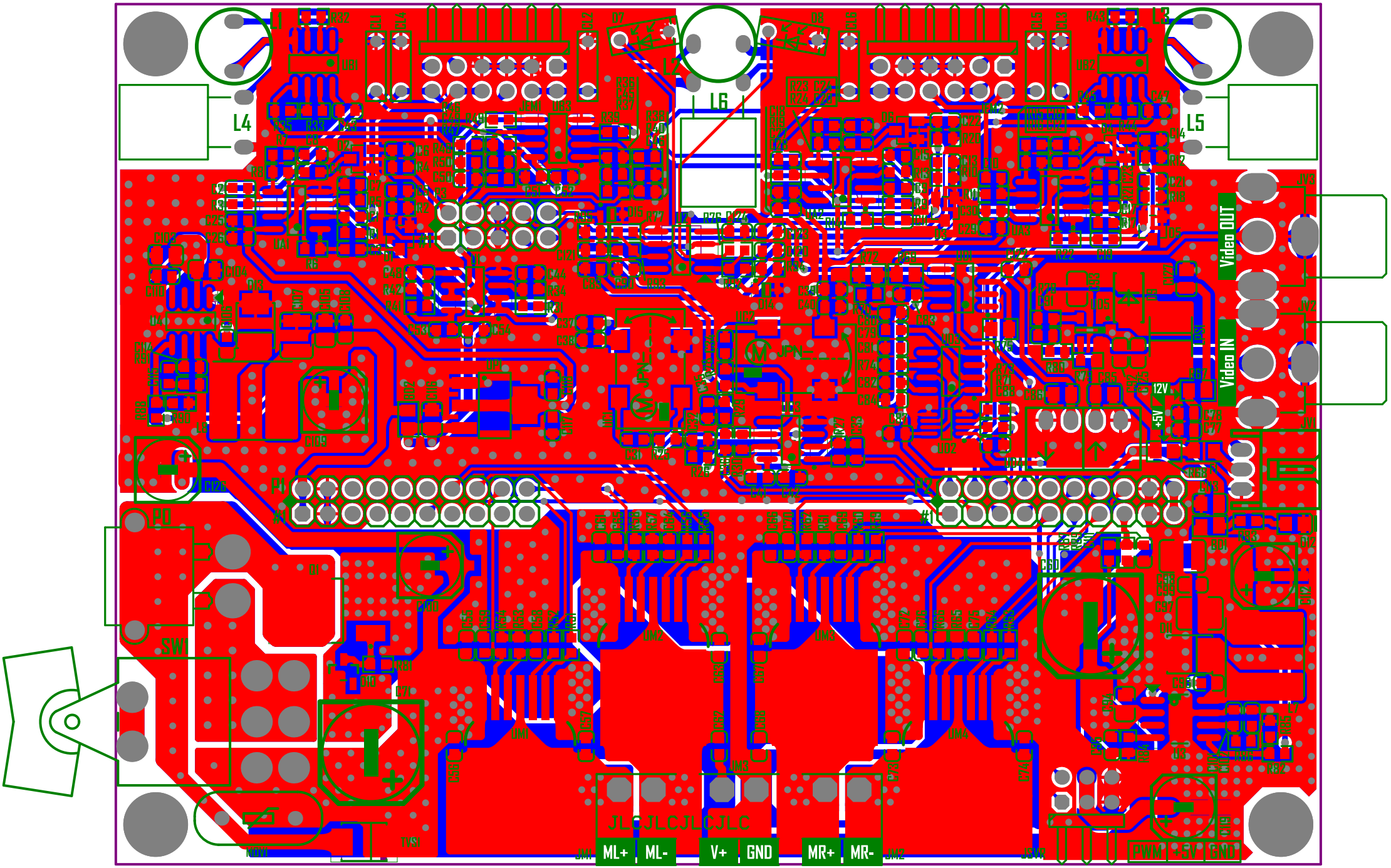
L4
L6
L5
Video OUT
Video IN
12V
+5V
ML+
ML-
V+
GND
MR+
MR-