Chapter 17
Fire Protection Systems

Introduction

Because fire is one of the most dangerous threats to an aircraft, the potential fire zones of modern multiengine aircraft are protected by a fixed fire protection system. A fire zone is an area, or region, of an aircraft designed by the manufacturer to require fire detection and/or fire extinguishing equipment and a high degree of inherent fire resistance. The term "fixed" describes a permanently installed system in contrast to any type of portable fire extinguishing equipment, such as a hand-held Halon or water fire extinguisher. A complete fire protection system on modern aircraft, and on many older aircraft, includes a fire detection system and a fire extinguishing system. Typical zones on aircraft that have a fixed fire detection and/or fire extinguisher system are:

1. Engines and auxiliary power unit (APU).
2. Cargo and baggage compartments.
3. Lavatories on transport aircraft.
4. Electronic bays.
5. Wheel wells.
6. Bleed air ducts.

To detect fires or overheat conditions, detectors are placed in the various zones to be monitored. Fires are detected in reciprocating engine and small turboprop aircraft using one or more of the following:

1. Overheat detectors.
2. Rate-of-temperature-rise detectors.
3. Flame detectors.
4. Observation by crewmembers.

In addition to these methods, other types of detectors are used in aircraft fire protection systems but are seldom used to detect engine fires. For example, smoke detectors are better suited to monitor areas where materials burn slowly or smolder, such as cargo and baggage compartments. Other types of detectors in this category include carbon monoxide detectors and chemical sampling equipment capable of detecting combustible mixtures that can lead to accumulations of explosive gases.

The complete aircraft fire protection systems of most large turbine-engine aircraft incorporate several of these different detection methods.

1. Rate-of-temperature-rise detectors.
2. Radiation sensing detectors.
3. Smoke detectors.
4. Overheat detectors.
5. Carbon monoxide detectors.
6. Combustible mixture detectors.
7. Optical detectors.
8. Observation by crew or passengers.

The types of detectors most commonly used for fast detection of fires are the rate-of-rise, optical sensor, pneumatic loop, and electric resistance systems.

Classes of Fires

The following classes of fires that are likely to occur onboard aircraft, as defined in the U.S. National Fire Protection Association (NFPA) Standard 10, Standard for Portable Fire Extinguishers, 2007 Edition, are:

1. Class A—fires involving ordinary combustible materials, such as wood, cloth, paper, rubber, and plastics.
2. Class B—fires involving flammable liquids, petroleum oils, greases, tars, oil-based paints, lacquers, solvents, alcohols, and flammable gases.
3. Class C—fires involving energized electrical equipment in which the use of an extinguishing media that is electrically nonconductive is important.
4. Class D—fires involving combustible metals, such as magnesium, titanium, zirconium, sodium, lithium, and potassium.

Requirements for Overheat & Fire Protection Systems

Fire protection systems on current-production aircraft do not rely on observation by crew members as a primary method of fire detection. An ideal fire detector system includes as many of the following features as possible:

1. No false warnings under any flight or ground condition.
2. Rapid indication of a fire and accurate location of the fire.
3. Accurate indication that a fire is out.

4. Indication that a fire has re-ignited.
5. Continuous indication for duration of a fire.
6. Means for electrically testing the detector system from the aircraft flight deck.
7. Resists damage from exposure to oil, water, vibration, extreme temperatures, or handling.
8. Light in weight and easily adaptable to any mounting position.
9. Circuitry that operates directly from the aircraft power system without inverters.
10. Minimum electrical current requirements when not indicating a fire.
11. Flight deck light that illuminates, indicating the location of the fire, and with an audible alarm system.
12. A separate detector system for each engine.

Fire Detection/Overheat Systems

A fire detection system should signal the presence of a fire. Units of the system are installed in locations where there are greater possibilities of a fire. Three detector system types in common use are the thermal switch, thermocouple, and the continuous loop.

Thermal Switch System

A number of detectors, or sensing devices, are available. Many older-model aircraft still operating have some type of thermal switch system or thermocouple system. A thermal switch system has one or more lights energized by the aircraft power system and thermal switches that control operation of the light(s). These thermal switches are heat-sensitive units that complete electrical circuits at a certain temperature. They are connected in parallel with each other but in series with the indicator lights. *[Figure 17-1]* If the temperature rises above a set value in any one section of the circuit, the thermal switch closes, completing the light circuit to indicate a fire or overheat condition. No set number of thermal switches is required; the exact number is usually determined by the aircraft manufacturer. On some installations, all the thermal detectors are connected to one light; on others, there may be one thermal switch for each indicator light.

Some warning lights are push-to-test lights. The bulb is tested by pushing it in to check an auxiliary test circuit. The circuit shown in *Figure 17-1* includes a test relay. With the relay contact in the position shown, there are two possible paths for current flow from the switches to the light. This is an additional safety feature. Energizing the test relay completes a series circuit and checks all the wiring and the light bulb. Also included in the circuit shown in *Figure 17-1* is a dimming relay. By energizing the dimming relay, the circuit is altered to include a resistor in series with the light. In some installations, several circuits are wired through the dimming relay, and all the warning lights may be dimmed at the same time.

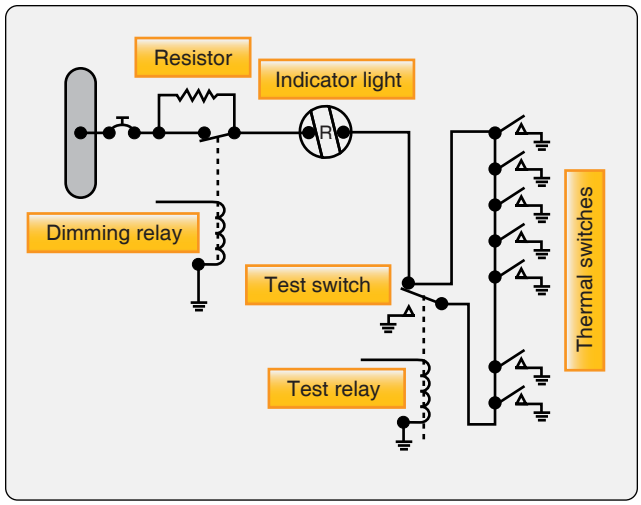

Figure 17-1. *Thermal switch fire circuit.*

Thermocouple System

The thermocouple fire warning system operates on an entirely different principle from the thermal switch system. A thermocouple depends on the rate of temperature rise and does not give a warning when an engine slowly overheats or a short circuit develops. The system consists of a relay box, warning lights, and thermocouples. The wiring system of these units may be divided into the following circuits:

1. Detector circuit.
2. Alarm circuit.
3. Test circuit.

These circuits are shown in *Figure 17-2*. The relay box contains two relays, the sensitive relay and the slave relay, and the thermal test unit. Such a box may contain from one to

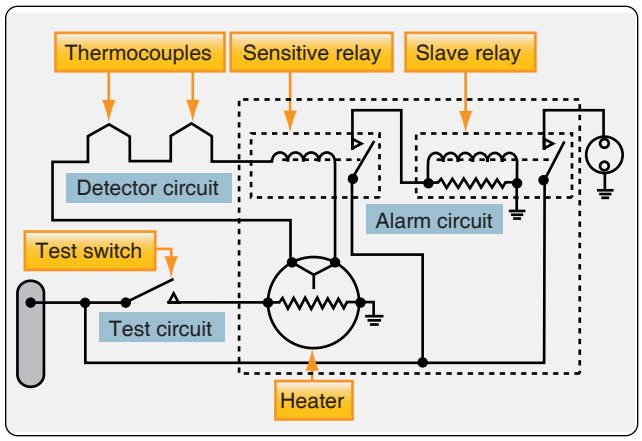

Figure 17-2. *Thermocouple fire warning circuit.*

eight identical circuits, depending on the number of potential fire zones. The relays control the warning lights. In turn, the thermocouples control the operation of the relays. The circuit consists of several thermocouples in series with each other and with the sensitive relay.

The thermocouple is constructed of two dissimilar metals, such as chromel and constantan. The point at which these metals are joined and exposed to the heat of a fire is called a hot junction. There is also a reference junction enclosed in a dead air space between two insulation blocks. A metal cage surrounds the thermocouple to give mechanical protection without hindering the free movement of air to the hot junction. If the temperature rises rapidly, the thermocouple produces a voltage because of the temperature difference between the reference junction and the hot junction. If both junctions are heated at the same rate, no voltage results. In the engine compartment, there is a normal, gradual rise in temperature from engine operation; because it is gradual, both junctions heat at the same rate and no warning signal is given. If there is a fire, however, the hot junction heats more rapidly than the reference junction. The ensuing voltage causes a current to flow within the detector circuit. Any time the current is greater than 4 milliamperes (0.004 ampere), the sensitive relay closes. This completes a circuit from the aircraft power system to the coil of the slave relay. The slave relay then closes and completes the circuit to the warning light to give a visual fire warning.

The total number of thermocouples used in individual detector circuits depends on the size of the fire zones and the total circuit resistance, which usually does not exceed 5 ohms. As shown in *Figure 17-2,* the circuit has two resistors. The resistor connected across the slave relay terminals absorbs the coil's self-induced voltage to prevent arcing across the points of the sensitive relay. The contacts of the sensitive relay are so fragile that they burn, or weld, if arcing is permitted.

When the sensitive relay opens, the circuit to the slave relay is interrupted and the magnetic field around its coil collapses. The coil then gets a voltage through self-induction but, with the resistor across the coil terminals, there is a path for any current flow as a result of this voltage, eliminating arcing at the sensitive relay contacts.

Continuous-Loop Systems

Transport aircraft almost exclusively use continuous thermal sensing elements for powerplant and wheel well protection. These systems offer superior detection performance and coverage, and they have the proven ruggedness to survive in the harsh environment of modern turbofan engines.

A continuous-loop detector or sensing system permits more complete coverage of a fire hazard area than any of the spot-type temperature detectors. Two widely used types of continuous-loop systems are the thermistor type detectors, such as the Kidde and the Fenwal systems, and the pneumatic pressure detector, such as the Lingberg system. (Lindberg system is also known as Systron-Donner and, more recently, Meggitt Safety Systems.)

Fenwal System

The Fenwal system uses a slender Inconel tube packed with thermally sensitive eutectic salt and a nickel wire center conductor. *[Figure 17-3]* Lengths of these sensing elements are connected in series to a control unit. The elements may be of equal or varying length and of the same or different temperature settings. The control unit, operating directly from the power source, impresses a small voltage on the sensing elements. When an overheat condition occurs at any point along the element length, the resistance of the eutectic salt within the sensing element drops sharply, causing current to flow between the outer sheath and the center conductor. This current flow is sensed by the control unit, which produces a signal to actuate the output relay and activate the alarms. When the fire has been extinguished or the critical temperature lowered below the set point, the Fenwal system automatically returns to standby alert, ready to detect any subsequent fire or overheat condition. The Fenwal system may be wired to employ a loop circuit. In this case, should an open circuit occur, the system still signals fire or overheat. If multiple open circuits occur, only that section between breaks becomes inoperative.

Kidde System

In the Kidde continuous-loop system, two wires are embedded in an Inconel tube filled with a thermistor core material. *[Figure 17-4]* Two electrical conductors go through the length of the core. One conductor has a ground connection to the tube, and the other conductor connects to

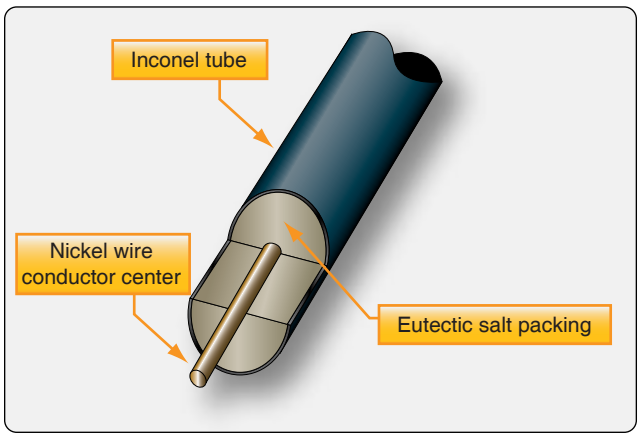

Figure 17-3. *Fenwal sensing element.*

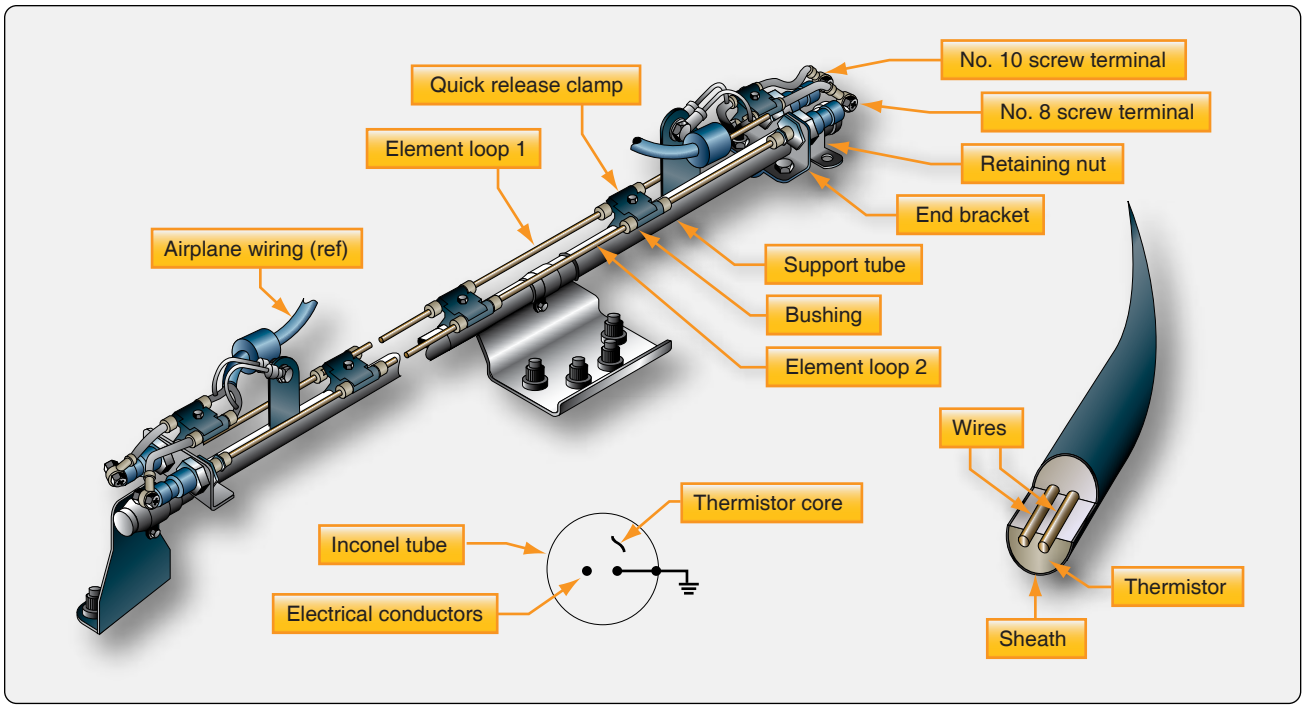

Figure 17-4. *Kidde continuous-loop system.*

the fire detection control unit. As the temperature of the core increases, electrical resistance to the ground decreases. The fire detection control unit monitors this resistance. If the resistance decreases to the overheat set point, an overheat indication occurs in the flight deck. Typically, a 10-second time delay is incorporated for the overheat indication. If the resistance decreases more to the fire set point, a fire warning occurs. When the fire or overheat condition is gone, the resistance of the core material increases to the reset point and the flight deck indications disappear. The rate of change of resistance identifies an electrical short or a fire. The resistance decreases more quickly with an electrical short than with a fire. In some aircraft, in addition to fire and overheat detection, the Kidde continuous-loop system can supply nacelle temperature data to the airplane condition monitoring function of the aircraft in-flight monitoring system (AIMS).

Sensing Element

The resistance of a sensor varies inversely as it is heated; as sensor temperature is increased, its resistance decreases. Each sensor is composed of two wires embedded in thermistor material that is encased in a heavy wall Inconel tube for high strength at elevated temperatures. The electrical connectors at each end of the sensor are ceramic insulated. The Inconel tubes are shrouded in a perforated stainless-steel tube and supported by Teflon-impregnated asbestos bushings at intervals. The shroud protects the sensor from breakage due to vibration, abrasion against airplane structure, and damage from maintenance activity.

The resistance of a sensor also varies inversely with its length, the increments of length being resistances in parallel. The heating of a short length of sensor out of a given length requires that the short length be heated above the temperature alarm point, so the total resistance of the sensor decreases to the alarm point. This characteristic permits integration of all temperatures throughout the length of the installation rather than sensing only the highest local temperature. The two wires encased within the thermistic material of each Inconel tube form a variable resistance network between themselves, between the detector wire and the Inconel tube, and between each adjacent incremental length of sensor. These variable resistance networks are monitored by the application of 28 volts direct current (DC) to the detector wire from the detector control unit.

Combination Fire & Overheat Warning

The analog signal from the thermistor-sensing element permits the control circuits to be arranged to give a two-level response from the same sensing element loop. The first is an overheat warning at a temperature level below the fire warning indicating a general engine compartment temperature rise, such as would be caused by leakage of hot bleed air or combustion gas into the engine compartment. It could also be an early warning of fire and would alert the crew to appropriate action to reduce the engine compartment temperature. The second-level response is at a level above that attainable by a leaking hot gas and is the fire warning.

Temperature Trend Indication

The analog signal produced by the sensing element loop as its temperature changes is converted to signals suitable for flight deck display to indicate engine bay temperature increases from normal. A comparison of the readings from each loop system also provides a check on the condition of the fire detection system, because the two loops should normally read alike.

System Test

The integrity of the continuous-loop fire detection system may be tested by actuating a test switch in the flight deck that switches one end of the sensing element loop from its control circuit to a test circuit built into the control unit, which simulates the sensing element resistance change due to fire. *[Figure 17-5]* If the sensing element loop is unbroken, the resistance detected by the control circuit is that of the simulated fire, and the alarm is activated. The test demonstrates, in addition to the continuity of the sensing element loop, the integrity of the alarm indicator circuit and the proper functioning of the control circuits. The thermistic properties of the sensing element remain unchanged for the life of the element (no irreversible changes take place when heated); the element functions properly as long as it is electrically connected to the control unit.

Fault Indication

Provision is made in the control unit to output a fault signal which activates a fault indicator whenever the short discriminator circuit detects a short in the sensing element loop. This is a requirement for transport category aircraft because such a short disables the fire detection system.

Dual-Loop Systems

Dual-loop systems are two complete basic fire detection systems with their output signals connected so that both must signal to result in a fire warning. This arrangement, called AND logic, results in greatly increased reliability against false fire warnings from any cause. Should one of the two loops be found inoperative at the preflight integrity test, a flight deck selector switch disconnects that loop and allows the signal from the other loop alone to activate the fire warning. Since the single operative loop meets all fire detector requirements, the aircraft can be safely dispatched and maintenance deferred to a more convenient time. However, should one of the two loops become inoperative in flight and a fire subsequently occur, the fire signaling loop activates a flight deck fault signal that alerts the flight crew to select single-loop operation to confirm the possible occurrence of fire.

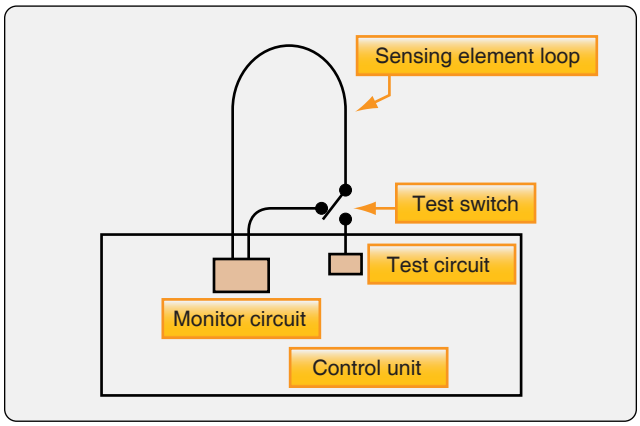

Figure 17-5. *Continuous loop fire detection system test circuit.*

Automatic Self-Interrogation

Dual-loop systems automatically perform the loop switching and decision-making function required of the flight crew upon appearance of the fault indication in the flight deck, a function called automatic self-interrogation. Automatic self-interrogation eliminates the fault indication and assures the immediate appearance of the fire indication should fire occur while at least one loop of the dual-loop system is operative. Should the control circuit from a single-loop signal fire, the self-interrogation circuit automatically tests the functioning of the other loop. If it tests operative, the circuit suppresses the fire signal because the operative loop would have signaled if a fire existed. If, however, the other loop tests inoperative, the circuit outputs a fire signal. The interrogation and decision takes place in milliseconds, so that no delay occurs if a fire actually exists.

Support Tube Mounted Sensing Elements

For those installations where it is desired to mount the sensing elements on the engine, and in some cases, on the aircraft structure, the support tube mounted element solves the problem of providing sufficient element support points and greatly facilitates the removal and reinstallation of the sensing elements for engine or system maintenance.

Most modern installations use the support tube concept of mounting sensing elements for better maintainability, as well as increased reliability. The sensing element is attached to a prebent stainless steel tube by closely spaced clamps and bushings, where it is supported from vibration damage and protected from pinching and excessive bending. The support tube-mounted elements can be furnished with either single or dual sensing elements.

Being prebent to the designed configuration assures its installation in the aircraft precisely in its designed location, where it has the necessary clearance to be free from the possibility of the elements chafing against engine or aircraft structure. The assembly requires only a few attachment points and, should its removal for engine maintenance be

necessary, it is quickly and easily accomplished. Should the assembly require repair or maintenance, it is easily replaced with another assembly, leaving the repair for the shop. Should a sensing element be damaged, it is easily replaced in the assembly.

Fire Detection Control Unit (Fire Detection Card)

The control unit for the simplest type of system typically contains the necessary electronic resistance monitoring and alarm output circuits housed in a hermetically sealed aluminum case fitted with a mounting bracket and electrical connector. For more sophisticated systems, control modules are employed that contain removable control cards with circuitry for individual hazard areas and/or unique functions. In the most advanced applications, the detection system circuitry controls all aircraft fire protection functions, including fire detection and extinguishing for engines, APUs, cargo bays, and bleed-air systems.

Pressure Type Sensor Responder Systems

Some smaller turboprop aircraft are outfitted with pneumatic single point detectors. The design of these detectors is based on the principles of gas laws. The sensing element consists of a closed, helium-filled tube connected at one end to a responder assembly. As the element is heated, the gas pressure inside the tube increases until the alarm threshold is reached. At this point, an internal switch closes and reports an alarm to the flight deck. Continuous fault monitoring is included. This type of sensor is designed as a single-sensor detection system and does not require a control unit.

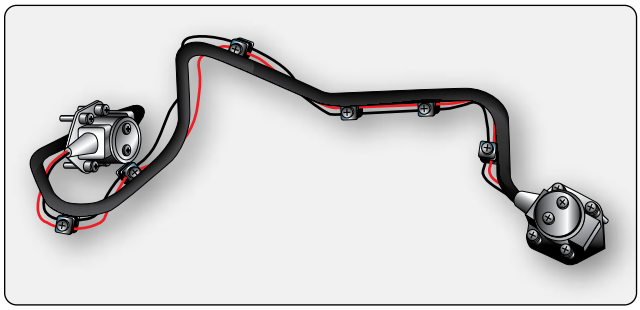

Figure 17-6. *Pneumatic dual fire/overheat detector assembly.*

Pneumatic Continuous-Loop Systems

The pneumatic continuous-loop systems are also known by their manufacturers' names Lindberg, Systron-Donner, and Meggitt Safety Systems. These systems are used for engine fire detection of transport type aircraft and have the same function as the Kidde system; however, they work on a different principle. They are typically used in a dual-loop design to increase reliability of the system.

The pneumatic detector has two sensing functions. It responds to an overall average temperature threshold and to a localized discrete temperature increase caused by impinging flame or hot gasses. Both the average and discrete temperature are factory set and are not field adjustable. *[Figure 17-6]*

Averaging Function

The fire/overheat detector serves as a fixed-volume device filled with helium gas. The helium gas pressure inside the detector increases in proportion to the absolute temperature and operates a pressure diaphragm that closes an electrical contact, actuating the alarm circuit. The pressure diaphragm within the responder assembly serves as one side of the electrical alarm contact and is the only moving part in the detector. The alarm switch is preset at an average temperature. Typical temperature ranges for average temperature settings are 200 °F (93 °C) to 850 °F (454 °C).

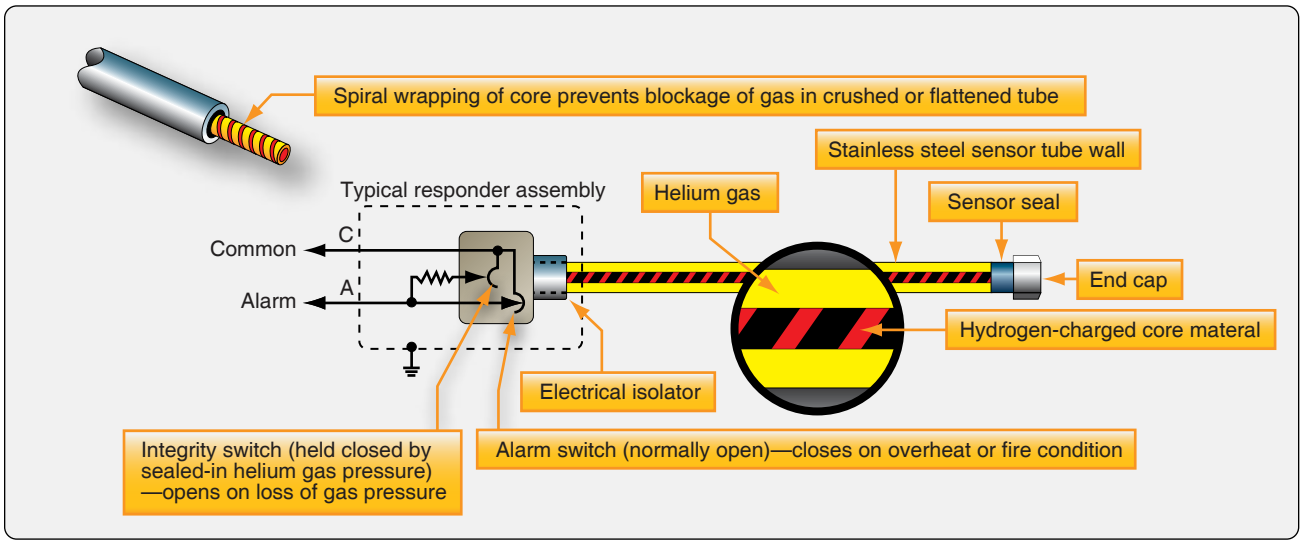

Figure 17-7. *Pneumatic pressure loop detector system.*

Discrete Function

The fire/overheat detector's sensor tube also contains a hydrogen-filled core material. *[Figure 17-7]* Large quantities of hydrogen gas are released from the detector core whenever a small section of the tube is heated to the preset discrete temperature or higher. The core outgassing increases the pressure inside the detector and actuates the alarm switch. Both the averaging and discrete functions are reversible. When the sensor tube is cooled, the average gas pressure is lowered, and the discrete hydrogen gas returns to the core material. The reduction of internal pressure allows the alarm switch to return to its normal position, opening the electrical alarm circuit.

Figure 17-8 shows a typical aircraft fire detection system in which a control module monitors two loops of up to four pneumatic detectors each, connected in parallel. The control module responds directly to an alarm condition and continuously monitors the wiring and integrity of each loop. The normally open alarm switch closes upon an overheat or fire condition, causing a short circuit between terminals A and C. During normal operation, a resistance value is maintained across the terminals by a normally closed integrity switch. Loss of sensor gas pressure opens the integrity switch, creating an open circuit across the terminals of the faulted detector. In addition to the pressure-activated alarm switch, there is a second integrity switch in the detector that is held closed by the averaging gas pressure at all temperatures down to –65 °F (–54 °C). If the detector should develop a leak, the loss of gas pressure would allow the integrity switch to open and signal a lack of detector integrity. The system then does not operate during test.

Fire Zones

Powerplant compartments are classified into zones based on the airflow through them.

1. Class A zone—area of heavy airflow past regular arrangements of similarly shaped obstructions. The power section of a reciprocating engine is usually of this type.
2. Class B zone—area of heavy airflow past aerodynamically clean obstructions. Included in this type are heat exchanger ducts, exhaust manifold shrouds, and areas where the inside of the enclosing cowling or other closure is smooth, free of pockets, and adequately drained so leaking flammables cannot puddle. Turbine engine compartments may be considered in this class if engine surfaces are aerodynamically clean and all airframe structural formers are covered by a fireproof liner to produce an aerodynamically clean enclosure surface.
3. Class C zone—area of relatively low airflow. An engine accessory compartment separated from the power section is an example of this type of zone.
4. Class D zone—area of very little or no airflow. These include wing compartments and wheel wells where little ventilation is provided.
5. Class X zone—area of heavy airflow and of unusual construction, making uniform distribution of the extinguishing agent very difficult. Areas containing deeply recessed spaces and pockets between large structural formers are of this type. Tests indicate agent requirements to be double those for Class A zones.

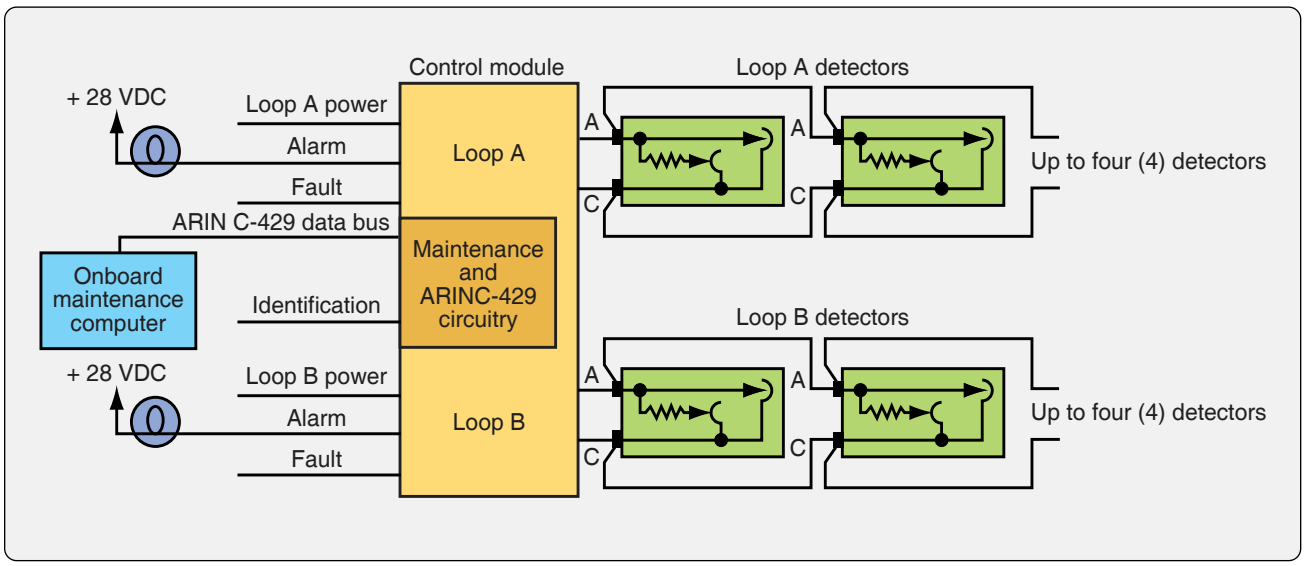

Figure 17-8. *Aircraft detection system control module.*

Smoke, Flame, & Carbon Monoxide Detection Systems

Smoke Detectors

A smoke detection system monitors the lavatories and cargo baggage compartments for the presence of smoke, which is indicative of a fire condition. Smoke detection instruments that collect air for sampling are mounted in the compartments in strategic locations. A smoke detection system is used where the type of fire anticipated is expected to generate a substantial amount of smoke before temperature changes are sufficient to actuate a heat detection system. Two common types used are light refraction and ionization.

Light Refraction Type

The light refraction type of smoke detector contains a photoelectric cell that detects light refracted by smoke particles. Smoke particles refract the light to the photoelectric cell and, when it senses enough change in the amount of light, it creates an electrical current that sets off a warning light. This type of smoke detector is referred to as a photoelectrical device.

Ionization Type

Some aircraft use an ionization type smoke detector. The system generates an alarm signal (both horn and indicator) by detecting a change in ion density due to smoke in the cabin. The system is connected to the 28-volt DC electrical power supplied from the aircraft. Alarm output and sensor sensitive checks are performed simply with the test switch on the control panel.

Flame Detectors

Optical sensors, often referred to as flame detectors, are designed to alarm when they detect the presence of prominent, specific radiation emissions from hydrocarbon flames. The two types of optical sensors available are infrared (IR) and ultraviolet (UV), based on the specific emission wavelengths that they are designed to detect. IR-based optical flame detectors are used primarily on light turboprop aircraft and helicopter engines. These sensors have proven to be very dependable and economical for these applications.

When radiation emitted by the fire crosses the airspace between the fire and the detector, it impinges on the detector front face and window. The window allows a broad spectrum of radiation to pass into the detector where it strikes the sensing device filter. The filter allows only radiation in a tight waveband centered on 4.3 micrometers in the IR band to pass on to the radiation-sensitive surface of the sensing device. The radiation striking the sensing device minutely raises its temperature causing small thermoelectric voltages to be generated. These voltages are fed to an amplifier whose output is connected to various analytical electronic processing circuits. The processing electronics are tailored exactly to the time signature of all known hydrocarbon flame sources and ignores false alarm sources, such as incandescent lights and sunlight. Alarm sensitivity level is accurately controlled by a digital circuit. *[Figure 17-9]*

Carbon Monoxide Detectors

Carbon monoxide is a colorless, odorless gas that is a byproduct of incomplete combustion. Its presence in the

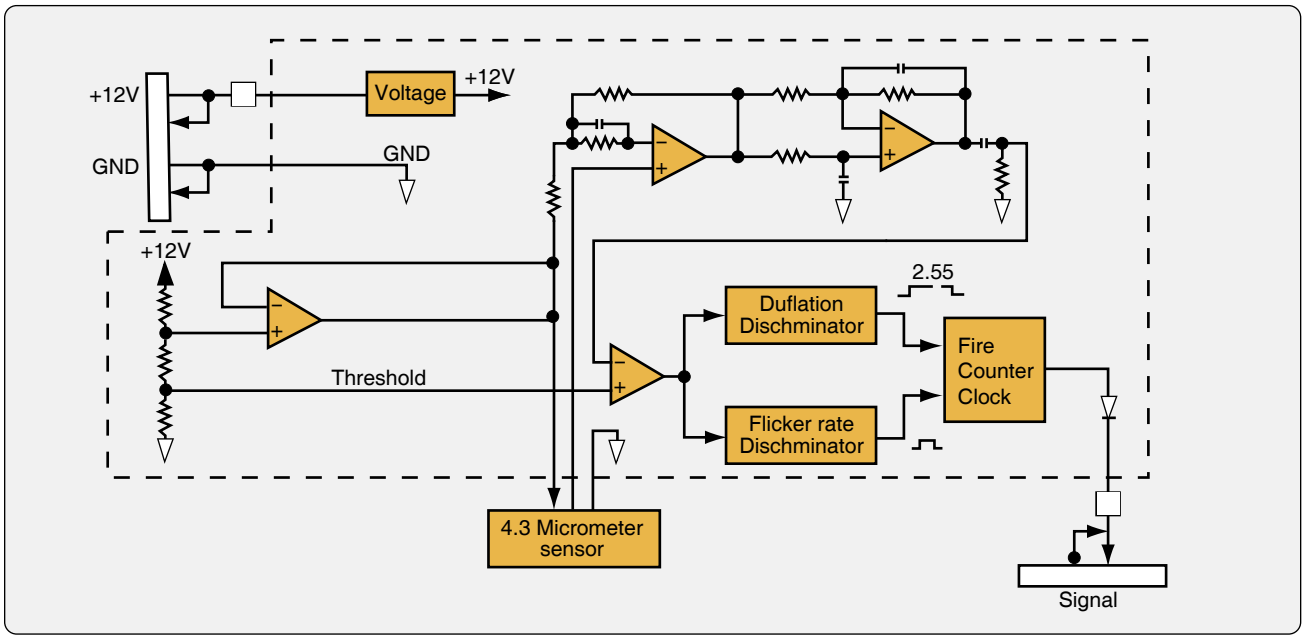

Figure 17-9. *Infrared (IR) based optical flame detector.*

breathing air of human beings can be deadly. To ensure crew and passenger safety, carbon monoxide detectors are used in aircraft cabins and flight decks. They are most often found on reciprocating engine aircraft with exhaust shroud heaters and on aircraft equipped with a combustion heater. Turbine bleed air, when used for heating the cabin, is tapped off of the engine upstream of the combustion chamber. Therefore, no threat of carbon monoxide presence is posed.

Carbon monoxide gas is found in varying degrees in all smoke and fumes of burning carbonaceous substances. Exceedingly small amounts of the gas are dangerous if inhaled. A concentration of as little as 2 parts in 10,000 may produce headache, mental dullness, and physical lethargy within a few hours. Prolonged exposure or higher concentrations may cause death.

There are several types of carbon monoxide detectors. Electronic detectors are common. Some are panel mounted and others are portable. Chemical color-change types are also common. These are mostly portable. Some are simple buttons, cards, or badges that have a chemical applied to the surface. Normally, the color of the chemical is tan. In the presence of carbon monoxide, the chemical darkens to grey or even black. The transition time required to change color is inversely related to the concentration of CO present. At 50 parts per million, the indication is apparent within 15 to 30 minutes. A concentration of 100 parts per million changes the color of the chemical in as little as 2–5 minutes. As concentration increases or duration of exposure is prolonged, the color evolves from grey to dark grey to black. If contaminated, installing a new indicating element allows a carbon monoxide portable test unit to be returned to service.

Extinguishing Agents & Portable Fire Extinguishers

There must be at least one hand held, portable fire extinguisher for use in the pilot compartment that is located within easy access of the pilot while seated. There must be at least one hand held fire extinguisher located conveniently in the passenger compartment of each airplane accommodating more than 6 and less than 30 passengers. Each extinguisher for use in a personnel compartment must be designed to minimize the hazard of toxic gas concentrations. The number of portable, hand held fire extinguishers for transport aircraft is shown in *Figure 17-10.*

Passenger capacity	No. of extinguishers
7 through 30	1
31 through 60	2
61 through 200	3
201 through 300	4
301 through 400	5
401 through 500	6
501 through 600	7
601 through 700	8

Figure 17-10. *Hand held fire extinguisher requirement for transport aircraft.*

Halogenated Hydrocarbons

For over 45 years, halogenated hydrocarbons (Halons) have been practically the only fire extinguishing agents used in civil transport aircraft. However, Halon is an ozone depleting and global warming chemical, and its production has been banned by international agreement. Although Halon usage has been banned in some parts of the world, aviation has been granted an exemption because of its unique operational and fire safety requirements. Halon has been the fire extinguishing agent of choice in civil aviation because it is extremely effective on a per unit weight basis over a wide range of aircraft environmental conditions. It is a clean agent (no residue), electrically nonconducting, and has relatively low toxicity.

Two types of Halons are employed in aviation: Halon 1301($CBrF_3$) a total flooding agent, and Halon 1211 ($CBrClF_2$) a streaming agent. Class A, B, or C fires are appropriately controlled with Halons. However, do not use Halons on a class D fire. Halon agents may react vigorously with the burning metal.

Note: While Halons are still in service and are appropriate agents for these classes of fires, the production of these ozone depleting agents has been restricted. Although not required, consider replacing Halon extinguishers with Halon replacement extinguishers when discharged. Halon replacement agents found to be compliant to date include the halocarbons HCFC Blend B, HFC-227ea, and HFC-236fa.

Inert Cold Gases

Carbon dioxide (CO_2) is an effective extinguishing agent. It is most often used in fire extinguishers that are available on the ramp to fight fires on the exterior of the aircraft, such as engine or APU fires. CO_2 has been used for many years to extinguish flammable fluid fires and fires involving electrical equipment. It is noncombustible and does not react with most substances. It provides its own pressure for discharge from the storage vessel, except in extremely cold climates where a booster charge of nitrogen may be added to winterize the system. Normally, CO_2 is a gas, but it is easily liquefied by compression and cooling. After liquification, CO_2 remains in a closed container as both liquid and gas. When CO_2 is then

discharged to the atmosphere, most of the liquid expands to gas. Heat absorbed by the gas during vaporization cools the remaining liquid to –110 °F, and it becomes a finely divided white solid, dry ice snow.

Carbon dioxide is about 1½ times as heavy as air, which gives it the ability to replace air above burning surfaces and maintain a smothering atmosphere. CO_2 is effective as an extinguishing agent primarily because it dilutes the air and reduces the oxygen content so that combustion is no longer supported. Under certain conditions, some cooling effect is also realized. CO_2 is considered only mildly toxic, but it can cause unconsciousness and death by suffocation if the victim is allowed to breathe CO_2 in fire extinguishing concentrations for 20 to 30 minutes. CO_2 is not effective as an extinguishing agent on fires involving chemicals containing their own oxygen supply, such as cellulose nitrate (used in some aircraft paints). Also, fires involving magnesium and titanium cannot be extinguished by CO_2.

Dry Powders

Class A, B, or C fires can be controlled by dry chemical extinguishing agents. The only all purpose (Class A, B, C rating) dry chemical powder extinguishers contain mono-ammonium phosphate. All other dry chemical powders have a Class B, C U.S – UL fire rating only. Dry powder chemical extinguishers best control class A, B, and C fire but their use is limited due to residual residue and clean up after deployment.

Water

Class A type fires are best controlled with water by cooling the material below its ignition temperature and soaking the material to prevent re-ignition.

Flight Deck & Cabin Interiors

All materials used in the flight deck and cabin must conform to strict standards to prevent fire. In case of a fire, several types of portable fire extinguishers are available to fight the fire. The most common types are Halon 1211 and water.

Extinguisher Types

Portable fire extinguishers are used to extinguish fires in the cabin or flight deck. *Figure 17-11* shows a Halon fire extinguisher used in a general aviation aircraft. The Halon extinguishers are used on electrical and flammable liquid fires. Some transport aircraft also use water fire extinguisher for use on non-electrical fires.

The following is a list of extinguishing agents and the type (class) fires for which each is appropriate.

1. Water—class A. Water cools the material below its ignition temperature and soaks it to prevent reignition.
2. Carbon dioxide—class B or C. CO_2 acts as a blanketing agent. ***Note:*** CO_2 is not recommended for hand-held extinguishers for internal aircraft use.
3. Dry chemicals—class A, B, or C. Dry chemicals are the best control agents for these types of fires.
4. Halons—only class A, B, or C.
5. Halocarbon clean agents—only class A, B, or C.
6. Specialized dry powder—class D. (Follow the recommendations of the extinguisher's manufacturer because of the possible chemical reaction between the burning metal and the extinguishing agent.)

The following hand-held extinguishers are unsuitable as cabin or flight deck equipment.

- CO_2.
- Dry chemicals (due to the potential for corrosion damage to electronic equipment, the possibility of visual obscuration if the agent were discharged into the flight deck area, and the cleanup problems from their use).

Figure 17-11. *Portable fire extinguisher.*

- Specialized dry powder (it is suitable for use in ground operations).

Installed Fire Extinguishing Systems

Transport aircraft have fixed fire extinguishing systems installed in:

1. Turbine engine compartments.
2. APU compartments.
3. Cargo and baggage compartments.
4. Lavatories.

CO_2 Fire Extinguishing Systems

Older aircraft with reciprocating engines used CO_2 as an extinguishing agent, but all newer aircraft designs with turbine engines use Halon or equivalent extinguishing agent, such as halocarbon clean agents.

Halogenated Hydrocarbons Fire Extinguishing Systems

The fixed fire extinguisher systems used in most engine fire and cargo compartment fire protection systems are designed to dilute the atmosphere with an inert agent that does not support combustion. Many systems use perforated tubing or discharge nozzles to distribute the extinguishing agent. High rate of discharge (HRD) systems use open-end tubes to deliver a quantity of extinguishing agent in 1 to 2 seconds. The most common extinguishing agent still used today is Halon 1301 because of its effective firefighting capability and relatively low toxicity (UL classification Group 6). Noncorrosive Halon 1301 does not affect the material it contacts and requires no cleanup when discharged. Halon 1301 is the current extinguishing agent for commercial aircraft, but a replacement is under development. Halon 1301 cannot be produced anymore because it depletes the ozone layer. Halon 1301 will be used until a suitable replacement is developed. Some military aircraft use HCL-125 and the Federal Aviation Administration (FAA) is testing HCL-125 for use in commercial aircraft.

Containers

Fire extinguisher containers (HRD bottles) store a liquid halogenated extinguishing agent and pressurized gas (typically nitrogen). They are normally manufactured from stainless steel. Depending upon design considerations, alternate materials are available, including titanium. Containers are also available in a wide range of capacities. They are produced under Department of Transportation (DOT) specifications or exemptions. Most aircraft containers are spherical in design, which provides the lightest weight possible. However, cylindrical shapes are available where space limitations are a factor. Each container incorporates a temperature/pressure sensitive safety relief diaphragm that prevents container pressure from exceeding container test pressure in the event of exposure to excessive temperatures. *[Figures 17-12* and *17-13]*

Discharge Valves

Discharge valves are installed on the containers. A cartridge (squib) and frangible disc-type valve are installed in the outlet of the discharge valve assembly. Special assemblies having solenoid-operated or manually-operated seat-type valves are also available. Two types of cartridge disc-release techniques are used. Standard release-type uses a slug driven by explosive energy to rupture a segmented closure disc. For high temperature or hermetically sealed units, a direct explosive impact-type cartridge is used that applies fragmentation impact to rupture a prestressed corrosion resistant steel diaphragm. Most containers use conventional metallic gasket seals that facilitate refurbishment following discharge. *[Figure 17-14]*

Pressure Indication

A wide range of diagnostics is utilized to verify the fire extinguisher agent charge status. A simple visual indication gauge is available, typically a helical bourdon-type indicator that is vibration resistant. *[Figure 17-13]* A combination gauge switch visually indicates actual container pressure and also provides an electrical signal if container pressure is lost, precluding the need for discharge indicators. A ground checkable diaphragm-type low-pressure switch is commonly used on hermetically sealed containers. The Kidde system has a temperature compensated pressure switch that tracks the container pressure variations with temperatures by using a hermetically sealed reference chamber.

Figure 17-12. *Built-in non-portable fire extinguisher containers (HRD bottles) on an airliner.*

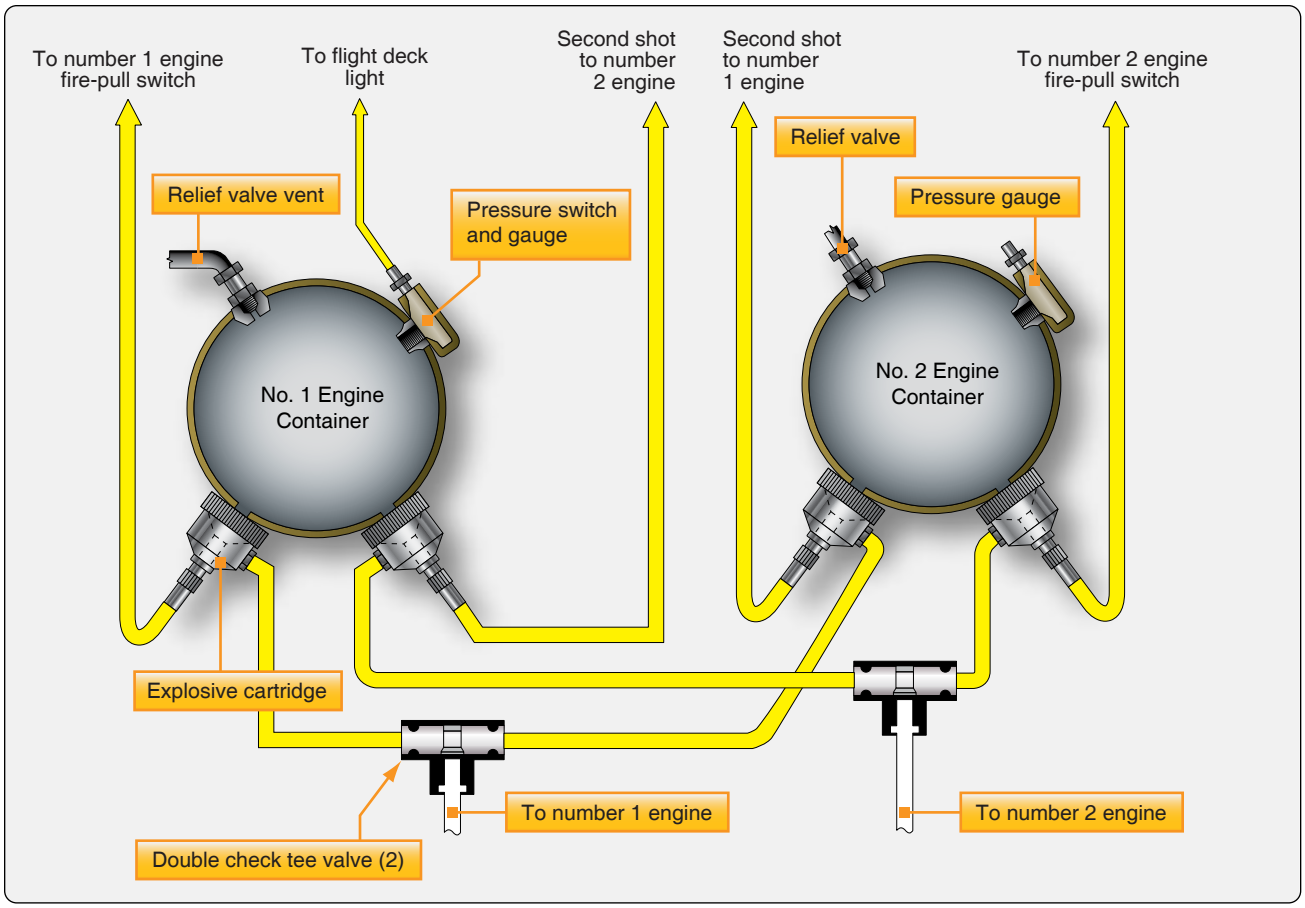

Figure 17-13. *Diagram of fire extinguisher containers (HRD bottles).*

Two-Way Check Valve

Two-way check valves are required in a two-shot system to prevent the extinguisher agent from a reserve container from backing up into the previous emptied main container. Valves are supplied with either MS-33514 or MS-33656 fitting configurations.

Discharge Indicators

Discharge indicators provide immediate visual evidence of container discharge on fire extinguishing systems. Two kinds of indicators can be furnished: thermal and discharge. Both types are designed for aircraft and skin mounting. *[Figure 17-15]*

Figure 17-14. *Discharge valve (left) and cartridge, or squib (right).*

Figure 17-15. *Discharge indicators.*

Thermal Discharge Indicator (Red Disc)

The thermal discharge indicator is connected to the fire container relief fitting and ejects a red disc to show when container contents have dumped overboard due to excessive heat. The agent discharges through the opening left when the disc blows out. This gives the flight and maintenance crews an indication that the fire extinguisher container needs to be replaced before next flight.

Yellow Disc Discharge Indicator

If the flight crew activates the fire extinguisher system, a yellow disc is ejected from the skin of the aircraft fuselage. This is an indication for the maintenance crew that the fire extinguishing system was activated by the flight crew, and the fire extinguishing container needs to be replaced before next flight.

Fire Switch

The engine and APU fire switches are typically installed on the center overhead panel or center console in the flight deck. *[Figure 17-16]* When an engine fire switch is activated, the following happens: the engine stops because the fuel control shuts off, the engine is isolated from the aircraft systems, and the fire extinguishing system is activated. Some aircraft use fire switches that need to be pulled and turned to activate the system, while others use a push-type switch with a guard. To prevent accidental activation of the fire switch, a lock is installed that releases the fire switch only when a fire has been detected. This lock can be manually released by the flight crew if the fire detection system malfunctions. *[Figure 17-17]*

Cargo Fire Detection

Transport aircraft need to have the following provisions for each cargo or baggage compartment:

1. The detection system must provide a visual indication to the flight crew within 1 minute after the start of a fire.

Figure 17-16. *Engine and APU fire switches on the flight deck center overhead panel.*

2. The system must be capable of detecting a fire at a temperature significantly below that at which the structural integrity of the airplane is substantially decreased.
3. There must be means to allow the crew to check, in flight, the functioning of each fire detector circuit.

Cargo Compartment Classification

Class A

A Class A cargo or baggage compartment is one in which the presence of a fire would be easily discovered by a crewmember while at his or her station and each part of the compartment is easily accessible in flight.

Class B

A Class B cargo, or baggage compartment, is one in which there is sufficient access in flight to enable a crewmember to effectively reach any part of the compartment with the contents of a hand fire extinguisher. When the access provisions are being used, no hazardous quantity of smoke, flames, or extinguishing agent enters any compartment occupied by the crew or passengers. There is a separate approved smoke detector or fire detector system to give warning at the pilot or flight engineer station.

Class C

A Class C cargo, or baggage compartment, is one not meeting the requirements for either a Class A or B compartment but in which:

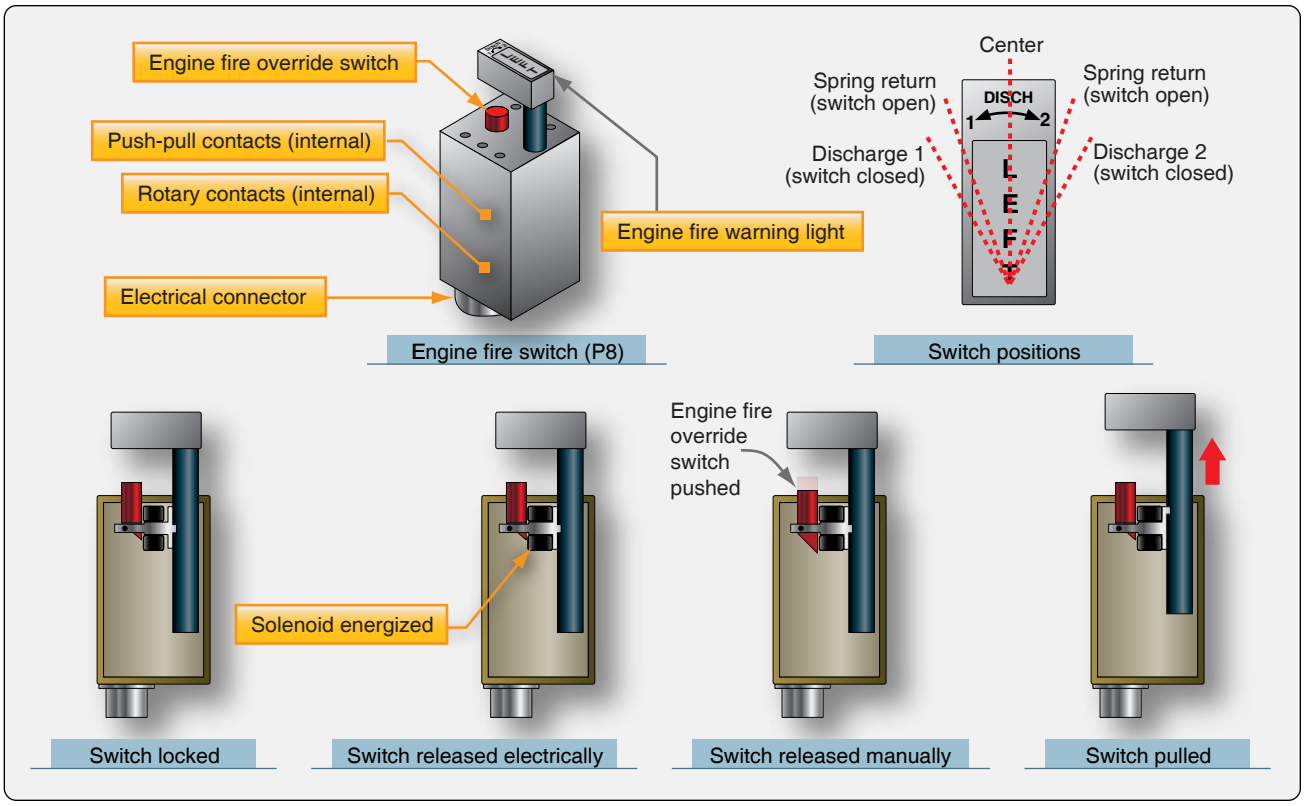

Figure 17-17. *Engine fire switch operation.*

1. There is a separate approved smoke detector or fire detector system to give warning at the pilot or flight engineer station.
2. There is an approved built-in fire extinguishing or suppression system controllable from the flight deck.
3. There are means to exclude hazardous quantities of smoke, flames, or extinguishing agent from any compartment occupied by the crew or passengers.
4. There are means to control ventilation and drafts within the compartment so that the extinguishing agent used can control any fire that may start within the compartment.

Class E

Class E cargo compartment is one on airplanes used only for the carriage of cargo and in which:

1. There is a separate approved smoke or fire detector system to give warning at the pilot or flight engineer station.
2. The controls for shutting off the ventilating airflow to, or within, the compartment are accessible to the flight crew in the crew compartment.
3. There are means to exclude hazardous quantities of smoke, flames, or noxious gases from the flight crew compartment.
4. The required crew emergency exits are accessible under any cargo loading condition.

Cargo & Baggage Compartment Fire Detection & Extinguisher System

The cargo compartment smoke detection system gives warnings in the flight deck if there is smoke in a cargo compartment. *[Figure 17-18]* Each compartment is equipped with a smoke detector. The smoke detectors monitor air in the cargo compartments for smoke. The fans bring air from the cargo compartment into the smoke detector. Before the air goes in the smoke detector, in-line water separators remove condensation and heaters increase the air temperature. *[Figure 17-19]*

Smoke Detector System

The optical smoke detector consists of source light emitting diodes (LEDs), intensity monitor photodiodes, and scatter detector photodiodes. Inside the smoke detection chamber, air flows between a source LED and a scatter detector photodiode. Usually, only a small amount of light from the LED gets to the scatter detector. If the air has smoke in it, the smoke particles reflect more light on the scatter detector. This causes an alarm signal. The intensity monitor photodiode makes sure that the source LED is on and keeps the output of the source LED constant. This configuration also finds

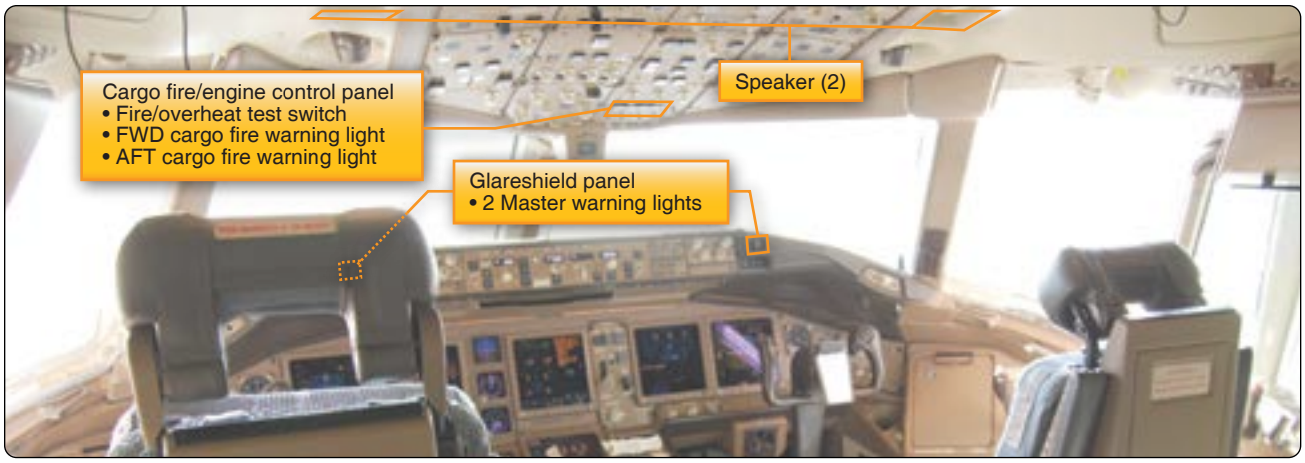

Figure 17-18. *Cargo fire detection warning.*

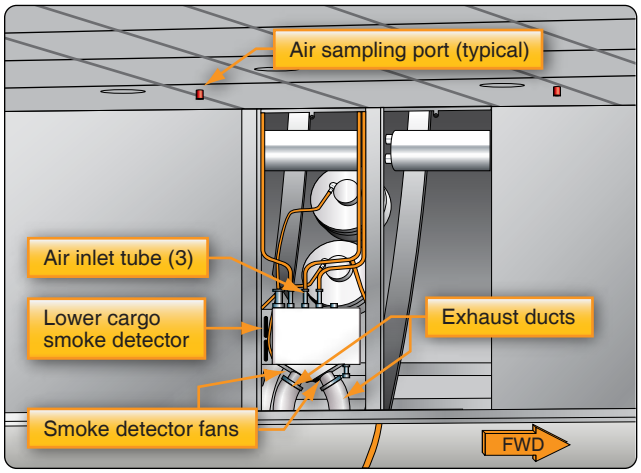

Figure 17-19. *Smoke detector installation.*

contamination of the LED and photodiodes. A defective diode, or contamination, causes the detector to change to the other set of diodes. The detector sends a fault message.

The smoke detector has multiple sampling ports. The fans draw air from the sampling ports through a water separator and a heater unit to the smoke detector. *[Figure 17-20]*

Cargo Compartment Extinguishing System

The cargo compartment extinguishing system is activated by the flight crew if the smoke detectors detect smoke in the cargo compartment. Some aircraft are outfitted with two types of fire extinguisher containers. The first system is the dump system that releases the extinguishing agent directly when the cargo fire discharge switch is activated. This action extinguishes the fire.

The second system is the metered system. After a time delay, the metered bottles discharge slowly and at a controlled rate through the filter regulator. Halon from the metered bottles replaces the extinguishing agent leakage. This keeps the correct concentration of extinguishing agent in the cargo compartment to keep the fire extinguished for 180 minutes.

The fire extinguishing bottles contain Halon 1301 or equivalent fire extinguishing agent pressurized with nitrogen. Tubing connects the bottles to discharge nozzles in the cargo compartment ceilings.

The extinguishing bottles are outfitted with squibs. The squib is an electrically operated explosive device. It is adjacent to

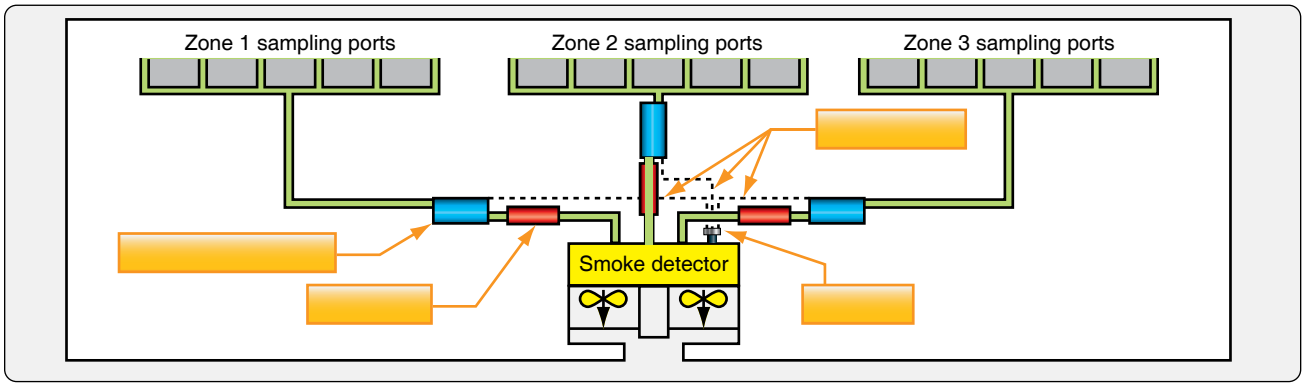

Figure 17-20. *Smoke detector system.*

a bottle diaphragm that can break. The diaphragm normally seals the pressurized bottle. When the cargo discharge switch is activated, the squib fires and the explosion breaks the diaphragm. Nitrogen pressure inside the bottle pushes the Halon through the discharge port into the cargo compartment. When the bottle discharges, a pressure switch is activated that sends an indication to the flight deck that a bottle has been discharged. Flow control valves are incorporated if the bottles can be discharged in multiple compartments. The flow control valves direct the extinguishing agent to the selected cargo compartment. *[Figure 17-21]*

The following indications occur in the flight deck if there is smoke in a cargo compartment:

- Master warning lights come on.
- Fire warning aural operates.
- A cargo fire warning message shows.
- Cargo fire warning light comes on.

The master warning lights and fire warning aural are prevented from operating during part of the takeoff operation.

Lavatory Smoke Detectors

Airplanes that have a passenger capacity of 20 or more are equipped with a smoke detector system that monitors the lavatories for smoke. Smoke indications provide a warning light in the flight deck or provide a warning light or audible warning at the lavatory and at flight attendant stations that would be readily detected by a flight attendant. Each lavatory must have a built-in fire extinguisher that discharges automatically. The smoke detector is located in the ceiling of the lavatory. *[Figure 17-22]*

Lavatory Smoke Detector System

Refer to *Figure 17-23*. The lavatory smoke detector is powered by the 28-volt DC left/right main DC bus. If there is smoke in the sensing chamber of the smoke detector, the alarm LED (red) comes on. The timing circuit makes an intermittent ground. The warning horn and lavatory call

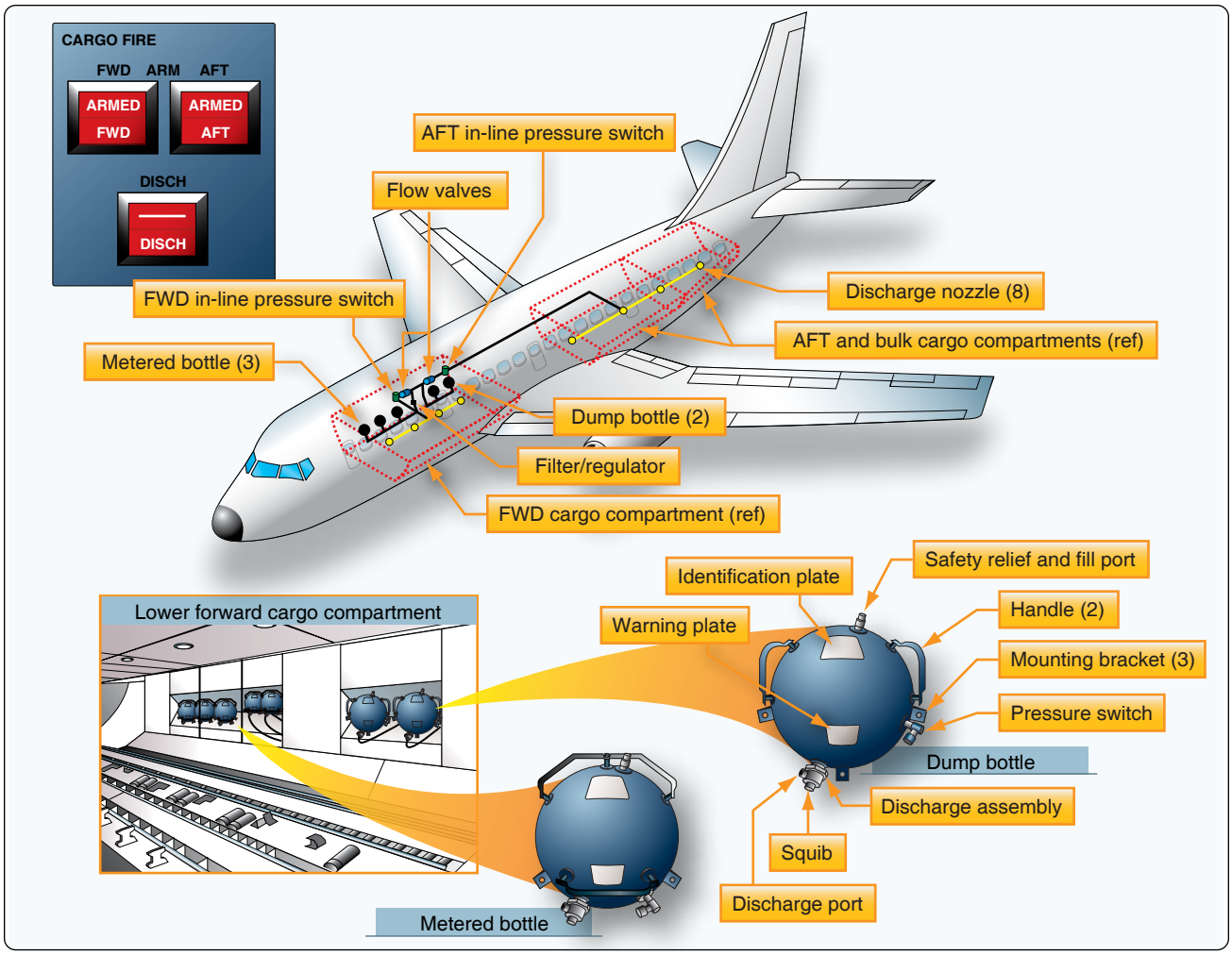

Figure 17-21. *Cargo and baggage compartment extinguishing system.*

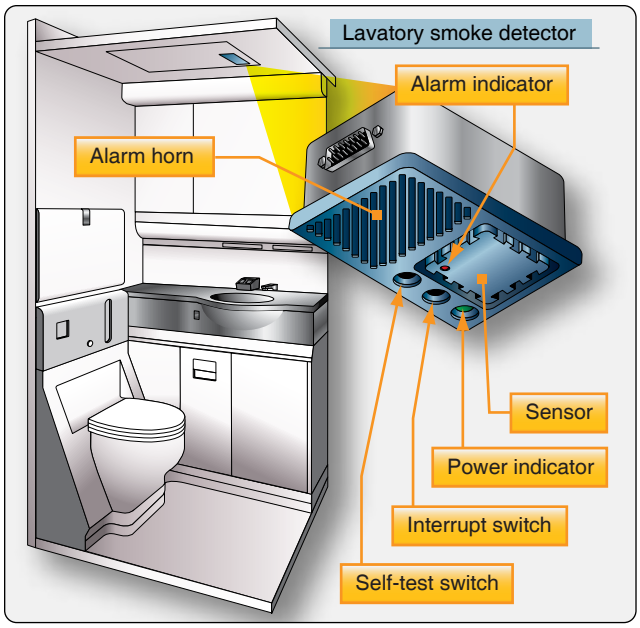

Figure 17-22. *Lavatory smoke detector diagram.*

light operate intermittently. The smoke detection circuit makes a ground for the relay. The energized relay makes a ground signal for the overhead electronics unit (OEU) in the central monitoring systems (CMS). This interface gives these indications: lavatory master call light flashes, cabin system control panel (CSCP) and cabin area control panel (CACP) pop-up window shows, and the lavatory call chime operates. Push the lavatory call reset switch or the smoke detector interrupt switch to cancel the smoke indications. If there is still smoke in the lavatory, the alarm LED (red) stays on. All smoke indications go away automatically when the smoke is gone.

Lavatory Fire Extinguisher System

The lavatory compartment is outfitted with a fire extinguisher bottle to extinguish fires in the waste compartment. The fire extinguisher is a bottle with two nozzles. The bottle contains pressurized Halon 1301 or equivalent fire extinguishing agent. When the temperature in the waste compartment reaches approximately 170 °F, the solder that seals the nozzles melt and the Halon is discharged. Weighing the bottle is often the only way to determine if the bottle is empty or full. *[Figure 17-24]*

Fire Detection System Maintenance

Fire detector sensing elements are located in many high-activity areas around aircraft engines. Their location, together with their small size, increases the chance of damage to the sensing elements during maintenance. General maintenance of a fire detection system typically includes the inspection and servicing of damaged sections, containment of loose material that could short detector terminals, correcting connection joints and shielding, and replacement of damaged sensing elements. An inspection and maintenance program for all types of continuous-loop systems should include the following visual checks.

Note: These procedures are examples and should not be used to replace the applicable manufacturer's instructions.

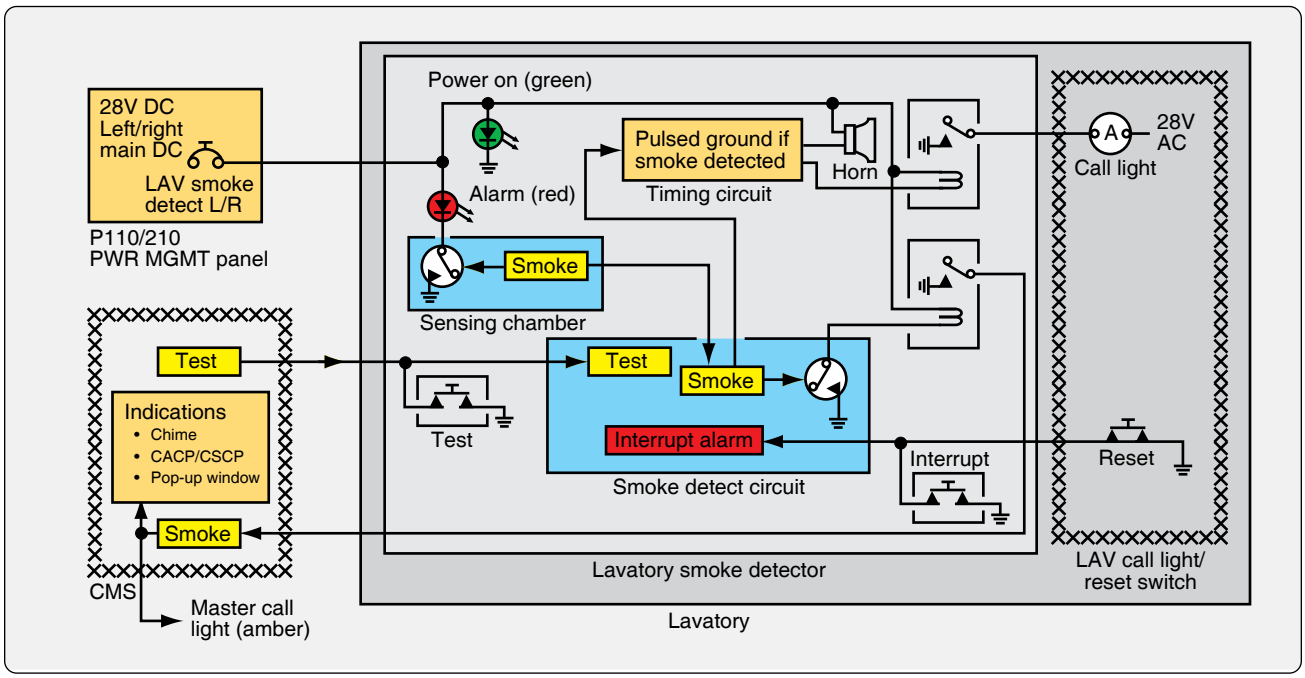

Figure 17-23. *Lavatory smoke detector diagram.*

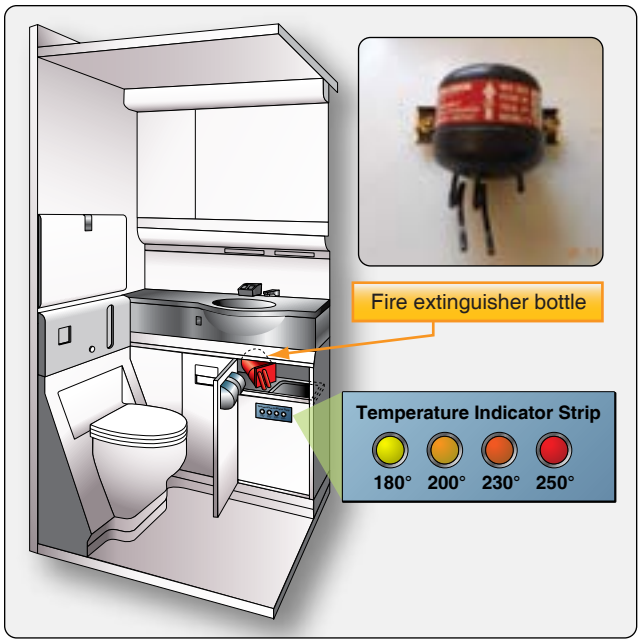

Figure 17-24. *Lavatory fire extinguishing bottle.*

Sensing elements of a continuous-loop system should be inspected for the following:

1. Cracked or broken sections caused by crushing or squeezing between inspection plates, cowl panels, or engine components.
2. Abrasion caused by rubbing of the element on cowling, accessories, or structural members.
3. Pieces of safety wire, or other metal particles, that may short the spot-detector terminals.
4. Condition of rubber grommets in mounting clamps that may be softened from exposure to oils or hardened from excessive heat.
5. Dents and kinks in sensing element sections. Limits on the element diameter, acceptable dents and kinks, and degree of smoothness of tubing contour are specified by manufacturers. No attempt should be made to straighten any acceptable dent or kink, since stresses may be set up that could cause tubing failure. *[Figure 17-25]*
6. Nuts at the end of the sensing elements should be inspected for tightness and safety wire. *[Figure 17-26]* Loose nuts should be retorqued to the value specified by the manufacturer's instructions. Some types of sensing element connection joints require the use of copper crush gaskets. These should be replaced any time a connection is separated.
7. If shielded flexible leads are used, they should be inspected for fraying of the outer braid. The braided sheath is made up of many fine metal strands woven into a protective covering surrounding the inner insulated wire. Continuous bending of the cable or rough treatment can break these fine wires, especially those near the connectors.

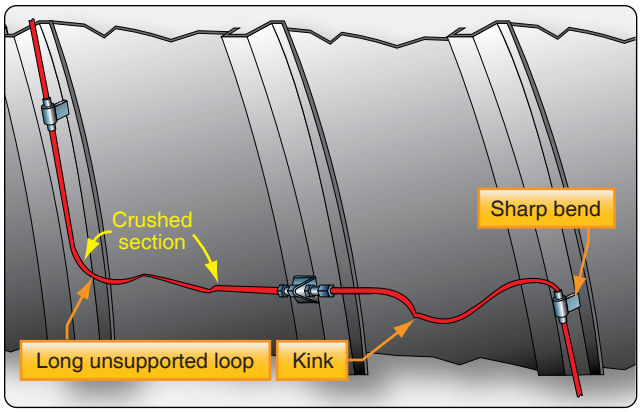

Figure 17-25. *Sensing element defects.*

8. Sensing element routing and clamping should be inspected carefully. *[Figure 17-27]* Long, unsupported sections may permit excessive vibration that can cause breakage. The distance between clamps on straight runs, usually about 8 to 10 inches, is specified by each manufacturer. At end connectors, the first support clamp usually is located about 4 to 6 inches from the end connector fittings. In most cases, a straight run of one inch is maintained from all connectors before a bend is started, and an optimum bend radius of 3 inches is normally adhered to.
9. Interference between a cowl brace and a sensing element can cause rubbing. This interference may cause wear and short the sensing element.
10. Grommets should be installed on the sensing element so that both ends are centered on its clamp. The split end of the grommet should face the outside of the nearest bend. Clamps and grommets should fit the element snugly. *[Figure 17-28]*

Fire Detection System Troubleshooting

The following troubleshooting procedures represent the most common difficulties encountered in engine fire detection systems:

1. Intermittent alarms are most often caused by an intermittent short in the detector system wiring. Such shorts may be caused by a loose wire that occasionally touches a nearby terminal, a frayed wire brushing against a structure, or a sensing element rubbing against a structural member long enough to wear through the insulation. Intermittent faults often can be located by moving wires to recreate the short.

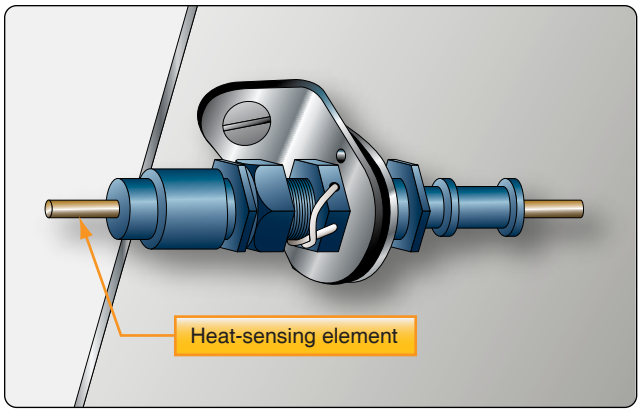

Figure 17-26. *Connector joint fitting attached to the structure.*

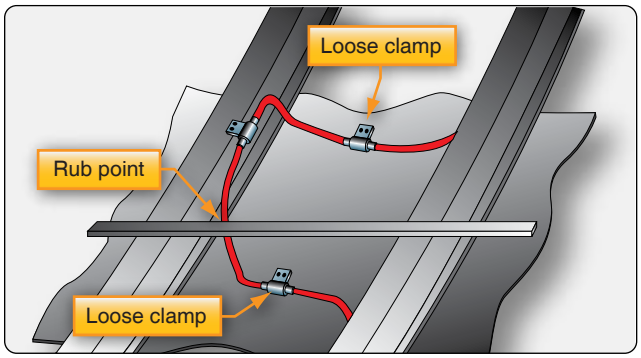

Figure 17-27. *Rubbing interference.*

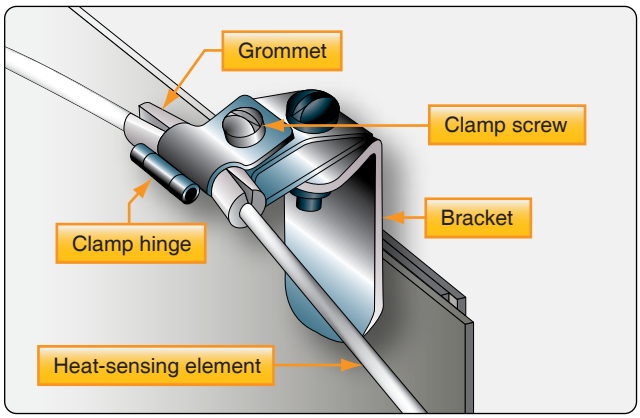

Figure 17-28. *Inspection of fire detector loop clamp.*

2. Fire alarms and warning lights can occur when no engine fire or overheat condition exists. Such false alarms can be most easily located by disconnecting the engine sensing loop connections from the control unit. If the false alarm ceases when the engine sensing loop is disconnected, the fault is in the disconnected sensing loop, which should be examined for areas that have been bent into contact with hot parts of the engine. If no bent element can be found, the shorted section can be located by isolating the connecting elements consecutively around the entire loop.
3. Kinks and sharp bends in the sensing element can cause an internal wire to short intermittently to the outer tubing. The fault can be located by checking the sensing element with an ohm meter while tapping the element in the suspected areas to produce the short.
4. Moisture in the detection system seldom causes a false fire alarm. If, however, moisture does cause an alarm, the warning persists until the contamination is removed, or boils away, and the resistance of the loop returns to its normal value.
5. Failure to obtain an alarm signal when the test switch is actuated may be caused by a defective test switch or control unit, the lack of electrical power, inoperative indicator light, or an opening in the sensing element or connecting wiring. When the test switch fails to provide an alarm, the continuity of a two-wire sensing loop can be determined by opening the loop and measuring the resistance. In a single-wire, continuous-loop system, the center conductor should be grounded.

Fire Extinguisher System Maintenance

Regular maintenance of fire extinguisher systems typically includes such items as the inspection and servicing of fire extinguisher bottles (containers), removal and reinstallation of cartridge and discharge valves, testing of discharge tubing for leakage, and electrical wiring continuity tests. The following paragraphs contain details of some of the most typical maintenance procedures.

Container Pressure Check

Fire extinguisher containers are checked periodically to determine that the pressure is between the prescribed minimum and maximum limits. Changes of pressure with ambient temperatures must also fall within prescribed limits. The graph shown in *Figure 17-29* is typical of the pressure-temperature curve graphs that provide maximum and minimum gauge readings. If the pressure does not fall within the graph limits, the extinguisher container is replaced.

Discharge Cartridges

The service life of fire extinguisher discharge cartridges is determined from the manufacturer's date stamp, which is usually placed on the face of the cartridge. The cartridge service life recommended by the manufacturer is usually in terms of years. Cartridges are available with a service life of 5 years or more. To determine the unexpired service life of a discharge cartridge, it is usually necessary to remove the electrical leads and discharge line from the plug body, which can then be removed from the extinguisher container.

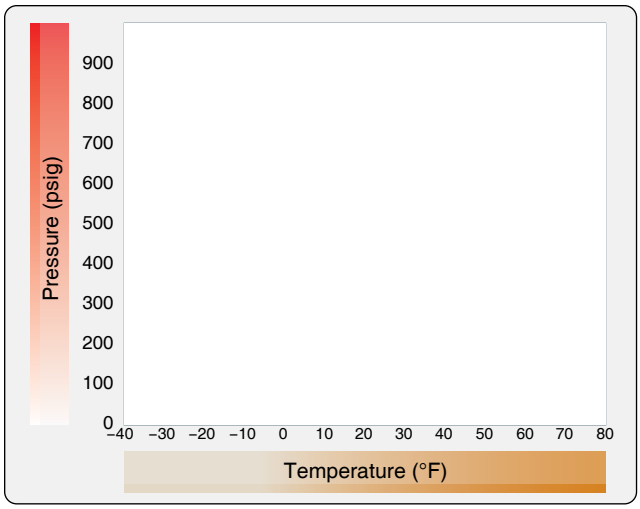

Figure 17-29. *Fire extinguisher container pressure-temperature chart.*

Agent Containers

Care must be taken in the replacement of cartridge and discharge valves. Most new extinguisher containers are supplied with their cartridge and discharge valve disassembled. Before installation on the aircraft, the cartridge must be assembled properly in the discharge valve and the valve connected to the container, usually by means of a swivel nut that tightens against a packing ring gasket. *[Figure 17-30]*

If a cartridge is removed from a discharge valve for any reason, it should not be used in another discharge valve assembly, since the distance the contact point protrudes may vary with each unit. Thus, continuity might not exist if a used plug that had been indented with a long contact point were installed in a discharge valve with a shorter contact point.

Note: The preceding material in this chapter has been largely of a general nature dealing with the principles involved and general procedures to be followed. When actually performing maintenance, always refer to the applicable maintenance manuals and other related publications pertaining to a particular aircraft.

Fire Prevention

Leaking fuel, hydraulic, deicing, or lubricating fluids can be sources of fire in an aircraft. This condition should be noted, and corrective action taken when inspecting aircraft systems. Minute pressure leaks of these fluids are particularly dangerous for they quickly produce an explosive atmospheric condition. Carefully inspect fuel tank installations for signs of external leaks. With integral fuel tanks, the external evidence may occur at some distance from where the fuel is actually escaping. Many hydraulic fluids are flammable and should not be permitted to accumulate in the structure. Sound-proofing and lagging materials may become highly flammable if soaked with oil of any kind. Any leakage or spillage of flammable fluid in the vicinity of combustion heaters is a serious fire risk, particularly if any vapor is drawn into the heater and passes over the hot combustion chamber.

Oxygen system equipment must be kept absolutely free from traces of oil or grease, since these substances spontaneously ignite when in contact with oxygen under pressure. Oxygen servicing cylinders should be clearly marked so they cannot be mistaken for cylinders containing air or nitrogen, as explosions have resulted from this error during maintenance operations.

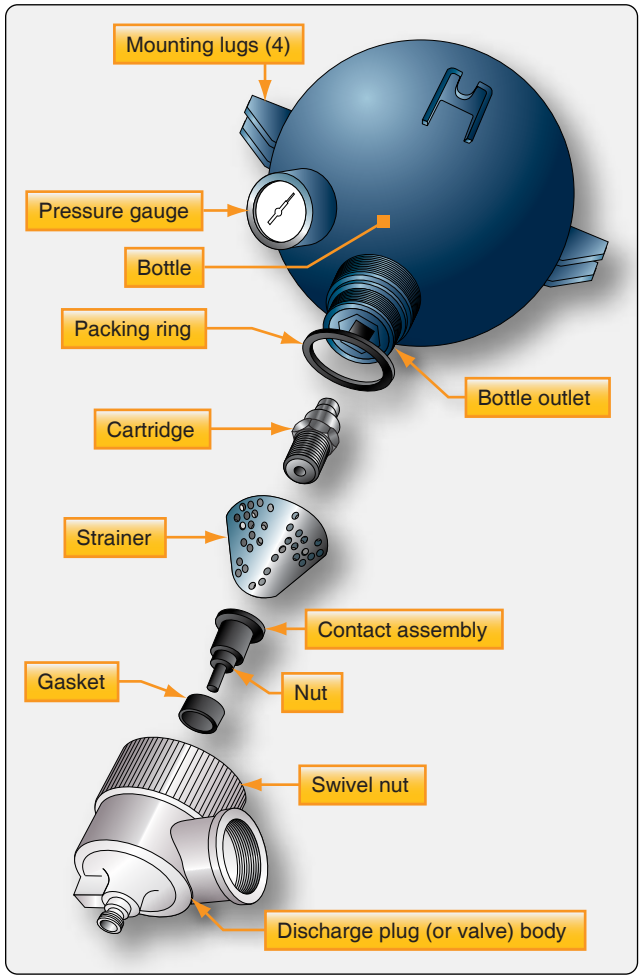

Figure 17-30. *Components of fire extinguisher container.*

Glossary

A

Aborted takeoff. A takeoff that is terminated prematurely when it is determined that some condition exists that makes takeoff or further flight dangerous.

Absolute pressure. Pressure measured from zero pressure or a vacuum.

Absolute pressure regulator. A valve used in a pneumatic system at the pump inlet to regulate the compressor inlet air pressure to prevent excessive speed variation and/or overspeeding of the compressor.

Absolute zero. The point at which all molecular motion ceases. Absolute zero is –460 °F and –273 °C.

Accumulator. A hydraulic component that consists of two compartments separated by a movable component, such as a piston, diaphragm, or bladder. One compartment is filled with compressed air or nitrogen, and the other is filled with hydraulic fluid and is connected into the system pressure manifold. An accumulator allows an incompressible fluid to be stored under pressure by the force produced by a compressible fluid. Its primary purposes are to act as a shock absorber in the system, and to provide a source of additional hydraulic power when heavy demands are placed on the system.

Actuator. A fluid power device that changes fluid pressure into mechanical motion.

ADC. Air data computer.

ADF. Automatic direction finder.

ADI. Attitude director indicator.

Advancing blade. The blade on a helicopter rotor whose tip is moving in the same direction the helicopter is moving.

Adverse yaw. A condition of flight at the beginning of a turn in which the nose of an airplane momentarily yaws in the opposite direction from the direction in which the turn is to be made.

Aerodynamic drag. The total resistance to the movement of an object through the air. Aerodynamic drag is composed of both induced drag and parasite drag. See induced drag and parasite drag.

Aerodynamic lift. The force produced by air moving over a specially shaped surface called an airfoil. Aerodynamic lift acts in a direction perpendicular to the direction the air is moving.

Aeronautical Radio Incorporated (ARINC). A corporation whose principal stockholders are the airlines. Its function is to operate certain communication links between airliners in flight and the airline ground facilities. ARINC also sets standards for communication equipment used by the airlines.

Aging. A change in the characteristics of a material with time. Certain aluminum alloys do not have their full strength when they are first removed from the quench bath after they have been heat-treated, but they gain this strength after a few days by the natural process of aging.

Agonic line. A line drawn on an aeronautical chart along which there is no angular difference between the magnetic and geographic north poles.

Air carrier. An organization or person involved in the business of transporting people or cargo by air for compensation or hire.

Air-cycle cooling system. A system for cooling the air in the cabin of a turbojet-powered aircraft. Compressor bleed air passes through two heat exchangers where it gives up some of its heat; then, it drives an expansion turbine where it loses still more of its heat energy as the turbine drives a compressor. When the air leaves the turbine, it expands and its pressure and temperature are both low.

Aircraft communication addressing and reporting system (ACARS). A two-way communication link between an airliner in flight and the airline's main ground facilities. Data is collected in the aircraft by digital sensors and is transmitted to the ground facilities. Replies from the ground may be printed out so the appropriate flight crewmember can have a hard copy of the response.

Airfoil. Any surface designed to obtain a useful reaction, or lift, from air passing over it.

Airspeed indicator. A flight instrument that measures the pressure differential between the pitot, or ram, air pressure, and the static pressure of the air surrounding the aircraft. This differential pressure is shown in units of miles per hour, knots, or kilometers per hour.

Airworthiness Directive (AD note). Airworthiness Directives (ADs) are legally enforceable rules issued by the FAA in accordance with 14 CFR part 39 to correct an unsafe condition in a product. 14 CFR part 39 defines a product as an aircraft, aircraft engine, propeller, or appliance.

Alclad. A registered trade name for clad aluminum alloy.

Alodine. The registered trade name for a popular conversion coating chemical used to produce a hard, airtight, oxide film on aluminum alloy for corrosion protection.

Alphanumeric symbols. Symbols made up of all of the letters in our alphabet, numerals, punctuation marks, and certain other special symbols.

Alternator. An electrical generator that produces alternating current. The popular DC alternator used on light aircraft produces three-phase AC in its stator windings. This AC is changed into DC by a six-diode, solid-state rectifier before it leaves the alternator.

Altimeter setting. The barometric pressure at a given location corrected to mean (average) sea level.

Altitude engine. A reciprocating engine whose rated sea-level takeoff power can be produced to an established higher altitude.

Alumel. An alloy of nickel, aluminum, manganese, and silicon that is the negative element in a thermocouple used to measure exhaust gas temperature.

Ambient pressure. The pressure of the air surrounding a person or an object.

Ambient temperature. The temperature of the air surrounding a person or an object.

American wire gauge. The system of measurement of wire size used in aircraft electrical systems.

Amphibian. An airplane with landing gear that allows it to operate from both water and land surfaces.

Amplifier. An electronic circuit in which a small change in voltage or current controls a much larger change in voltage or current.

Analog electronics. Electronics in which values change in a linear fashion. Output values vary in direct relationship to changes of input values.

Analog-type indicator. An electrical meter that indicates values by the amount a pointer moves across a graduated numerical scale.

Aneroid. The sensitive component in an altimeter or barometer that measures the absolute pressure of the air. The aneroid is a sealed, flat capsule made of thin corrugated discs of metal soldered together and evacuated by pumping all of the air out of it. Evacuating the aneroid allows it to expand or collapse as the air pressure on the outside changes.

Angle of attack. The acute angle formed between the chord line of an airfoil and the direction of the air that strikes the airfoil.

Angle of attack indicator. An instrument that measures the angle between the local airflow around the direction detector and the fuselage reference plane.

Angle of incidence. The acute angle formed between the chord line of an airfoil and the longitudinal axis of the aircraft on which it is mounted.

Annual rings. The rings that appear in the end of a log cut from a tree. The number of annual rings per inch gives an indication of the strength of the wood. The more rings there are and the closer they are together, the stronger the wood. The pattern of alternating light and dark rings is caused by the seasonal variations in the growth rate of the tree. A tree grows quickly in the spring and produces the light-colored, less dense rings. The slower growth during the summer, or latter part of the growing season, produces the dark-colored, denser rings.

Annunciator panel. A panel of warning lights in plain sight of the pilot. These lights are identified by the name of the system they represent and are usually covered with colored lenses to show the meaning of the condition they announce.

Anodizing. The electrolytic process in which a hard, airtight, oxide film is deposited on aluminum alloy for corrosion protection.

Antenna. A special device used with electronic communication

and navigation systems to radiate and receive electromagnetic energy.

Anti-ice system. A system that prevents the formation of ice on an aircraft structure.

Anti-icing additive. A chemical added to the turbine-engine fuel used in some aircraft. This additive mixes with water that condenses from the fuel and lowers its freezing temperature so it will not freeze and block the fuel filters. It also acts as a biocidal agent and prevents the formation of microbial contamination in the tanks.

Antidrag wire. A structural wire inside a Pratt truss airplane wing between the spars. Antidrag wires run from the rear spar inboard, to the front spar at the next bay outboard. Antidrag wires oppose the forces that try to pull the wing forward.

Antiservo tab. A tab installed on the trailing edge of a stabilator to make it less sensitive. The tab automatically moves in the same direction as the stabilator to produce an aerodynamic force that tries to bring the surface back to a streamline position. This tab is also called an antibalance tab.

Antiskid brake system. An electrohydraulic system in an airplane's power brake system that senses the deceleration rate of every main landing gear wheel. If any wheel decelerates too rapidly, indicating an impending skid, pressure to that brake is released and the wheel stops decelerating. Pressure is then reapplied at a slightly lower value.

Antitear strip. Strips of aircraft fabric laid under the reinforcing tape before the fabric is stitched to an aircraft wing.

Arbor press. A press with either a mechanically or hydraulically operated ram used in a maintenance shop for a variety of pressing functions.

Arcing. Sparking between a commutator and brush or between switch contacts that is caused by induced current when a circuit is broken.

Area. The number of square units in a surface.

Aspect ratio. The ratio of the length, or span, of an airplane wing to its width, or chord. For a nonrectangular wing, the aspect ratio is found by dividing the square of the span of the wing by its area. Aspect Ratio = $\text{span}^2 \div \text{area}$.

Asymmetrical airfoil. An airfoil section that is not the same on both sides of the chord line.

Asymmetrical lift. A condition of uneven lift produced by the rotor when a helicopter is in forward flight. Asymmetrical lift is caused by the difference between the airspeed of the advancing blade and that of the retreating blade.

Attenuate. To weaken, or lessen the intensity of, an activity.

Attitude indicator. A gyroscopic flight instrument that gives the pilot an indication of the attitude of the aircraft relative to its pitch and roll axes. The attitude indicator in an autopilot is in the sensing system that detects deviation from a level-flight attitude.

Augmenter tube. A long, stainless steel tube around the discharge of the exhaust pipes of a reciprocating engine. Exhaust gases flow through the augmenter tube and produce a low pressure that pulls additional cooling air through the engine compartment. Heat may be taken from the augmenter tubes and directed through the leading edges of the wings for thermal anti-icing.

Autoclave. A pressure vessel inside of which air can be heated to a high temperature and pressure raised to a high value. Autoclaves are used in the composite manufacturing industry to apply heat and pressure for curing resins.

Autogyro. A heavier-than-air rotor-wing aircraft sustained in the air by rotors turned by aerodynamic forces rather than by engine power. When the name Autogyro is spelled with a capital A, it refers to a specific series of machines built by Juan de la Cierva or his successors.

Autoignition system. A system on a turbine engine that automatically energizes the igniters to provide a relight if the engine should flame out.

Automatic adjuster. A subsystem in an aircraft disc brake that compensates for disc or lining wear. Each time the brakes are applied, the automatic adjuster is reset for zero clearance, and when the brakes are released, the clearance between the discs or the disc and lining is returned to a preset value. A malfunctioning automatic adjuster in a multiple-disc brake can cause sluggish and jerky operation.

Automatic flight control system (AFCS). The full system of automatic flight control that includes the autopilot, flight director, horizontal situation indicator, air data sensors, and other avionics inputs.

Automatic pilot (autopilot). An automatic flight control device that controls an aircraft about one or more of its three axes. The primary purpose of an autopilot is to relieve the pilot of the control of the aircraft during long periods of flight.

Autosyn system. A synchro system used in remote indicating instruments. The rotors in an Autosyn system are two-pole electromagnets, and the stators are delta-connected, three-phase, distributed-pole windings in the stator housings. The rotors in the transmitters and indicators are connected in parallel and are excited with 26-volt, 400-Hz AC. The rotor in the indicator follows the movement of the rotor in the transmitter.

Auxiliary power unit (APU). A small turbine or reciprocating engine that drives a generator, hydraulic pump, and air pump. The APU is installed in the aircraft and is used to supply electrical power, compressed air, and hydraulic pressure when the main engines are not running.

Aviation snips. Compound-action hand shears used for cutting sheet metal. Aviation snips come in sets of three. One pair cuts to the left, one pair cuts to the right, and the third pair of snips cuts straight.

Aviator's oxygen. Oxygen that has had almost all of the water and water vapor removed from it.

Avionics. The branch of technology that deals with the design, production, installation, use, and servicing of electronic equipment mounted in aircraft.

Azimuth. A horizontal angular distance, measured clockwise from a fixed reference direction to an object.

B

Back course. The reciprocal of the localizer course for an ILS (Instrument Landing System). When flying a back-course approach, the aircraft approaches the instrument runway from the end on which the localizer antennas are installed.

Backhand welding. Welding in which the torch is pointed away from the direction the weld is progressing.

Backplate (brake component). A floating plate on which the wheel cylinder and the brake shoes attach on an energizing-type brake.

Backup ring. A flat leather or Teflon ring installed in the groove in which an O-ring or T-seal is placed. The backup ring is on the side of the seal away from the pressure, and it prevents the pressure extruding the seal between the piston and the cylinder wall.

Balance cable. A cable in the aileron system of an airplane that connects to one side of each aileron. When the control wheel is rotated, a cable from the flight deck pulls one aileron down and relaxes the cable going to the other aileron. The balance cable pulls the other aileron up.

Balance panel. A flat panel hinged to the leading edge of some ailerons that produces a force which assists the pilot in holding the ailerons deflected. The balance panel divides a chamber ahead of the aileron in such a way that when the aileron is deflected downward, for example, air flowing over its top surface produces a low pressure that acts on the balance panel and causes it to apply an upward force to the aileron leading edge.

Balance tab. An adjustable tab mounted on the trailing edge of a control surface to produce a force that aids the pilot in moving the surface. The tab is automatically actuated in such a way it moves in the direction opposite to the direction the control surface on which it is mounted moves.

Balanced actuator. A linear hydraulic or pneumatic actuator that has the same area on each side of the piston.

Banana oil. Nitrocellulose dissolved in amyl acetate, so named because it smells like bananas.

Bank (verb). The act of rotating an aircraft about its longitudinal axis.

Barometric scale. A small window in the dial of a sensitive altimeter in which the pilot sets the barometric pressure level from which the altitude shown on the altimeter is measured. This window is sometimes called the "Kollsman" window. base. The electrode of a bipolar transistor between the emitter and the collector. Varying a small flow of electrons moving into or out of the base controls a much larger flow of electron between the emitter and the collector.

Base. The electrode of a bipolar transistor between the emitter and the collector. Varying a small flow of electrons moving into or out of the base controls a much larger flow of electrons between the emitter and the collector.

Bead (tire component). The high-strength carbon-steel wire bundles that give an aircraft tire its strength and stiffness where it mounts on the wheel.

Bead seat area. The flat surface on the inside of the rim of an aircraft wheel on which the bead of the tire seats.

Bearing strength (sheet metal characteristic). The amount of pull needed to cause a piece of sheet metal to tear at the points at which it is held together with rivets. The bearing strength of a material is affected by both its thickness and the diameter of the rivet.

Beehive spring. A hardened-steel, coil-spring retainer used to hold a rivet set in a pneumatic rivet gun. This spring gets its name from its shape. It screws onto the end of the rivet gun and allows the set to move back and forth, but prevents it being driven from the gun.

Bend allowance. The amount of material actually used to make a bend in a piece of sheet metal. Bend allowance depends upon the thickness of the metal and the radius of the bend, and is normally found in a bend allowance chart.

Bend radius. The radius of the inside of a bend.

Bend tangent line. A line made in a sheet metal layout that indicates the point at which the bend starts.

Bernoulli's principle. The basic principle that explains the relation between kinetic energy and potential energy in fluids that are in motion. When the total energy in a column of moving fluid remains constant, any increase in the kinetic energy of the fluid (its velocity) results in a corresponding decrease in its potential energy (its pressure).

Bezel. The rim that holds the glass cover in the case of an aircraft instrument.

Bias-cut surface tape. A fabric tape in which the threads run at an angle of 45° to the length of the tape. Bias-cut tape may be stretched around a compound curve such as a wing tip bow without wrinkling.

Bilge area. A low portion in an aircraft structure in which water and contaminants collect. The area under the cabin floorboards is normally called the bilge.

Bipolar transistor. A solid-state component in which the flow of current between its emitter and collector is controlled by a much smaller flow of current into or out of its base. Bipolar transistors may be of either the NPN or PNP type.

BITE. Built-in test equipment.

Blade track. The condition of a helicopter rotor in which each blade follows the exact same path as the blade ahead of it.

Black box. A term used for any portion of an electrical or electronic system that can be removed as a unit. A black box does not have to be a physical box.

Bladder-type fuel cell. A plastic-impregnated fabric bag supported in a portion of an aircraft structure so that it forms a cell in which fuel is carried.

Bleeder. A material such as glass cloth or mat that is placed over a composite lay-up to absorb the excess resin forced out of the ply fibers when pressure is applied.

Bleeding dope. Dope whose pigments are soluble in the solvents or thinners used in the finishing system. The color will bleed up through the finished coats.

Bleeding of brakes. The maintenance procedure of removing air entrapped in hydraulic fluid in the brakes. Fluid is bled from the brake system until fluid with no bubbles flows out.

Blimp. A cigar-shaped, nonrigid lighter-than-air flying machine.

Blush. A defect in a lacquer or dope finish caused by moisture condensing on the surface before the finish dries. If the humidity of the air is high, the evaporation of the solvents cools the air enough to cause the moisture to condense. The water condensed from the air mixes with the lacquer or dope and forms a dull, porous, chalky-looking finish called blush. A blushed finish is neither attractive nor protective.

Bonding. The process of electrically connecting all isolated components to the aircraft structure. Bonding provides a path for return current from electrical components, and a low-impedance path to ground to minimize static electrical charges. Shock-mounted components have bonding braids connected across the shock mounts.

Boost pump. An electrically driven centrifugal pump mounted in the bottom of the fuel tanks in large aircraft. Boost pumps provide a positive flow of fuel under pressure to the engine for starting and serve as an emergency backup in the event an engine-driven pump should fail. They are also used to transfer fuel from one tank to another and to pump fuel overboard when it is being dumped. Boost pumps prevent vapor locks by holding pressure on the fuel in the line to the engine-driven pump. Centrifugal boost pumps have a small agitator propeller on top of the impeller to force vapors from the fuel before it leaves the tank.

Boundary layer. The layer of air that flows next to an aerodynamic surface. Because of the design of the surface and local surface roughness, the boundary layer often has a random flow pattern, sometimes even flowing in a direction opposite to the direction of flight. A turbulent boundary layer causes a great deal of aerodynamic drag.

Bourdon tube. A pressure-indicating mechanism used in most oil pressure and hydraulic pressure gages. It consists of a sealed, curved tube with an elliptical cross section. Pressure inside the tube tries to straighten it, and as it straightens, it moves a pointer across a calibrated dial. Bourdon-tube

pressure gauges are used to measure temperature by measuring the vapor pressure in a sealed container of a volatile liquid, such as methyl chloride, whose vapor pressure varies directly with its temperature.

Brazing. A method of thermally joining metal parts by wetting the surface with a molten nonferrous alloy. When the molten material cools and solidifies, it holds the pieces together. Brazing materials melt at a temperature higher than 800 °F, but lower than the melting temperature of the metal on which they are used.

British thermal unit (BTU). The amount of heat energy needed to raise the temperature of one pound of pure water 1 °F.

Bucking bar. A heavy steel bar with smooth, hardened surfaces, or faces. The bucking bar is held against the end of the rivet shank when it is driven with a pneumatic rivet gun, and the shop head is formed against the bucking bar.

Buffeting. Turbulent movement of the air over an aerodynamic surface.

Bulb angle. An L-shaped metal extrusion having an enlarged, rounded edge that resembles a bulb on one of its legs.

Bulkhead. A structural partition that divides the fuselage of an aircraft into compartments, or bays.

Bungee shock cord. A cushioning material used with the nonshock absorbing landing gears installed on older aircraft. Bungee cord is made up of many small rubber bands encased in a loose-woven cotton braid.

Burnish (verb). To smooth the surface of metal that has been damaged by a deep scratch or gouge. The metal piled up at the edge of the damage is pushed back into the damage with a smooth, hard steel burnishing tool.

Burr. A sharp rough edge of a piece of metal left when the metal was sheared, punched, or drilled.

Bus. A point within an electrical system from which the individual circuits get their power.

Buttock line. A line used to locate a position to the right or left of the center line of an aircraft structure.

Butyl. Trade name for a synthetic rubber product made by the polymerization of isobutylene. Butyl withstands such potent chemicals as phosphate ester-base (Skydrol) hydraulic fluids.

C

Cage (verb). To lock the gimbals of a gyroscopic instrument so it will not be damaged by abrupt flight maneuvers or rough handling.

Calendar month. A measurement of time used by the FAA for inspection and certification purposes. One calendar month from a given day extends from that day until midnight of the last day of that month.

Calibrated airspeed (CAS). Indicated airspeed corrected for position error. See position error.

Calorie. The amount of heat energy needed to raise the temperature of one gram of pure water 1 °C.

Canted rate gyro. A rate gyro whose gimbal axis is tilted so it can sense rotation of the aircraft about its roll axis as well as its yaw axis.

Camber (wheel alignment). The amount the wheels of an aircraft are tilted, or inclined, from the vertical. If the top of the wheel tilts outward, the camber is positive. If the top of the wheel tilts inward, the camber is negative.

Canard. A horizontal control surface mounted ahead of the wing to provide longitudinal stability and control.

Cantilever wing. A wing that is supported by its internal structure and requires no external supports. The wing spars are built in such a way that they carry all the bending and torsional loads.

Cap strip. The main top and bottom members of a wing rib. The cap strips give the rib its aerodynamic shape.

Capacitance-type fuel quantity measuring system. A popular type of electronic fuel quantity indicating system that has no moving parts in the fuel tank. The tank units are cylindrical capacitors, called probes, mounted across the tank, from top to bottom. The dielectric between the plates of the probes is either fuel or the air above the fuel, and the capacitance of the probe varies with the amount of fuel in the tank. The indicator is a servo-type instrument driven by the amplified output of a capacitance bridge.

Capillary tube. A soft copper tube with a small inside diameter. The capillary tube used with vapor-pressure thermometer connects the temperature sensing bulb to the Bourdon tube. The capillary tube is protected from physical damage by enclosing it in a braided metal wire jacket.

Carbon monoxide detector. A packet of chemical crystals mounted in the aircraft flight deck or cabin where they are easily visible. The crystals change their color from yellow to green when they are exposed to carbon monoxide.

Carbon-pile voltage regulator. A type of voltage regulator used with high-output DC generators. Field current is controlled by varying the resistance of a stack of thin carbon discs. This resistance is varied by controlling the amount the stack is compressed by a spring whose force is opposed by the pull of an electromagnet. The electromagnet's strength is proportional to the generator's output voltage.

Carburizing flame. An oxyacetylene flame produced by an excess of acetylene. This flame is identified by a feather around the inner cone. A carburizing flame is also called a reducing flame.

Carcass (tire component). The layers of rubberized fabric that make up the body of an aircraft tire.

Case pressure. A low pressure that is maintained inside the case of a hydraulic pump. If a seal becomes damaged, hydraulic fluid will be forced out of the pump rather than allowing air to be drawn into the pump.

Cathode-ray tube (CRT). A display tube used for oscilloscopes and computer video displays. An electron gun emits a stream of electrons that is attracted to a positively charged inner surface of the face of the tube. Acceleration and focusing grids speed the movement of the electrons and shape the beam into a pinpoint size. Electrostatic or electromagnetic forces caused by deflection plates or coils move the beam over the face of the tube. The inside surface of the face of the tube is treated with a phosphor material that emits light when the beam of electrons strikes it.

Cavitation. A condition that exist in a hydraulic pump when there is not enough pressure in the reservoir to force fluid to the inlet of the pump. The pump picks up air instead of fluid.

CDI. Course deviation indicator.

CDU. Control display unit.

Center of gravity. The location on an aircraft about which the force of gravity is concentrated.

Center of lift. The location of the chord line of an airfoil at which all the lift forces produced by the airfoil are considered to be concentrated.

Center of pressure. The point on the chord line of an airfoil where all of the aerodynamic forces are considered to be concentrated.

Centering cam. A cam in the nose-gear shock strut that causes the piston to center when the strut fully extends. When the aircraft takes off and the strut extends, the wheel is straightened in its fore-and-aft position so it can be retracted into the wheel well.

Charging stand (air conditioning service equipment). A handy and compact arrangement of air conditioning servicing equipment. A charging stand contains a vacuum pump, a manifold gauge set, and a method of measuring and dispensing the refrigerant.

Chatter. A type of rapid vibration of a hydraulic pump caused by the pump taking in some air along with the hydraulic fluid.

Check (wood defect). Longitudinal cracks that extend across a log's annual rings.

Check valve. A hydraulic or pneumatic system component that allows full flow of fluid in one direction but blocks all flow in the opposite direction.

Chemical oxygen candle system. An oxygen system used for emergency or backup use. Solid blocks of material that release oxygen when they are burned are carried in special fireproof fixtures. When oxygen is needed, the candles are ignited with an integral igniter, and oxygen flows into the tubing leading to the masks.

Chevron seal. A form of one-way seal used in some fluid-power actuators. A chevron seal is made of a resilient material whose cross section is in the shape of the letter V. The pressure being sealed must be applied to the open side of the V.

Chromel. An alloy of nickel and chromium used as the positive element in a thermocouple for measuring exhaust gas temperature.

Circle. A closed plane figure with every point an equal distance from the center. A circle has the greatest area for its circumference of any enclosed shape.

Circuit breaker. An electrical component that automatically opens a circuit any time excessive current flows through it. A circuit breaker may be reset to restore the circuit after the fault causing the excessive current has been corrected.

Clad aluminum. A sheet of aluminum alloy that has a coating of pure aluminum rolled on one or both of its surfaces for corrosion protection.

Clamp-on ammeter. An electrical instrument used to measure current without opening the circuit through which it is flowing. The jaws of the ammeter are opened, slipped over the current-carrying wire, and then clamped shut. Current flowing through the wire produces a magnetic field which induces a voltage in the ammeter that is proportional to the amount of current.

Cleco fastener. A patented spring-type fastener used to hold metal sheets in position until they can be permanently riveted together.

Close-quarter iron. A small hand-held iron with an accurately calibrated thermostat. This iron is used for heat-shrinking polyester fabrics in areas that would be difficult to work with a large iron.

Closed angle. An angle formed in sheet metal that has been bent more than 90°.

Closed assembly time. The time elapsing between the assembly of glued joints and the application of pressure.

Closed-center hydraulic system. A hydraulic system in which the selector valves are installed in parallel with each other. When no unit is actuated, fluid circulates from the pump back to the reservoir without flowing through any of the selector valves.

Closed-center selector valve. A type of flow-control valve used to direct pressurized fluid into one side of an actuator, and at the same time, direct the return fluid from the other side of the actuator to the fluid reservoir. Closed-center selector valves are connected in parallel between the pressure manifold and the return manifold.

Coaxial. Rotating about the same axis. Coaxial rotors of a helicopter are mounted on concentric shafts in such a way that they turn in opposite directions to cancel torque.

Coaxial cable. A special type of electrical cable that consists of a central conductor held rigidly in the center of a braided outer conductor. Coaxial cable, commonly called coax, is used for attaching radio receivers and transmitters to their antenna.

Coefficient of drag. A dimensionless number used in the formula for determining induced drag as it relates to the angle of attack.

Coefficient of lift. A dimensionless number relating to the angle of attack used in the formula for determining aerodynamic lift.

Coin dimpling. A process of preparing a hole in sheet metal for flush riveting. A coining die is pressed into the rivet hole to form a sharp-edged depression into which the rivet head fits.

Collective pitch control. The helicopter control that changes the pitch of all of the rotor blades at the same time. Movement of the collective pitch control increases or decreases the lift produced by the entire rotor disc.

Collodion. Cellulose nitrate used as a film base for certain aircraft dopes.

Combustion heater. A type of cabin heater used in some aircraft. Gasoline from the aircraft fuel tanks is burned in the heater.

Compass fluid. A highly refined, water-clear petroleum product similar to kerosene. Compass fluid is used to dampen the oscillations of magnetic compasses.

Compass rose. A location on an airport where an aircraft can be taken to have its compasses "swung." Lines are painted on the rose to mark the magnetic directions in 30° increments.

Compass swinging. A maintenance procedure that minimizes deviation error in a magnetic compass. The aircraft is aligned on a compass rose, and the compensating magnets in the compass case are adjusted so the compass card indicates the direction marked on the rose. After the deviation error is minimized on all headings, a compass correction card is completed and mounted on the instrument panel next to the compass.

Compensated fuel pump. A vane-type, engine-driven fuel pump that has a diaphragm connected to the pressure regulating valve. The chamber above the diaphragm is vented to the carburetor upper deck where it senses the pressure of the air as it enters the engine. The diaphragm allows the fuel pump to compensate for altitude changes and keeps the carburetor inlet fuel pressure a constant amount higher than the carburetor inlet air pressure.

Compensator port (brake system component). A small hole between a hydraulic brake master cylinder and the reservoir. When the brakes are released, this port is uncovered and the fluid in the master cylinder is vented to the reservoir. When the brake is applied, the master-cylinder piston covers the compensator port and allows pressure in the line to the brake to build up and apply the brakes. When the brake is released, the piston uncovers the compensator port. If any fluid has been lost from the brake, the reservoir will refill the master cylinder. A restricted compensator port will cause the brakes to drag or will cause them to be slow to release.

Composite. Something made up of different materials combined in such a way that the characteristics of the resulting material are different from those of any of the components.

Compound curve. A curve formed in more than one plane. The surface of a sphere is a compound curve.

Compound gauge (air conditioning servicing equipment). A pressure gauge used to measure the pressure in the low side of an air conditioning system. A compound gauge is calibrated from zero to 30 inches of mercury vacuum, and from zero to about 150-psi positive gauge pressure.

Compressibility effect. The sudden increase in the total drag of an airfoil in transonic flight caused by formation of shock waves on the surface.

Compression failure. A type of structural failure in wood caused by the application of too great a compressive load. A compression failure shows up as a faint line running at right angles to the grain of the wood.

Compression strut. A heavy structural member, often in the form of a steel tube, used to hold the spars of a Pratt truss airplane wing apart. A compression strut opposes the compressive loads between the spars arising from the tensile loads produced by the drag and antidrug wires.

Compression wood. A defect in wood that causes it to have a high specific gravity and the appearance of an excessive growth of summerwood. In most species, there is little difference between the color of the springwood and the summerwood. Any material containing compression wood is unsuited for aircraft structural use and must be rejected.

Compressor (air conditioning system component). The component in a vapor-cycle cooling system in which the low-pressure refrigerant vapors, after they leave the evaporator, are compressed to increase both their temperature and pressure before they pass into the condenser. Some compressors are driven by electric motors, others by hydraulic motors and, in the case of most light airplanes, are belt driven from the engine.

Concave surface. A surface that is curved inward. The outer edges are higher than the center.

Condenser (air conditioning system component). The component in a vapor-cycle cooling system in which the heat taken from the aircraft cabin is given up to the ambient air outside the aircraft.

Conductor (electrical). A material that allows electrons to move freely from one atom to another within the material.

Coning angle. The angle formed between the plane of rotation of a helicopter rotor blade when it is producing lift and a line perpendicular to the rotor shaft. The degree of the coning angle is determined by the relationship between the centrifugal force acting on the blades and the aerodynamic lift produced by the blades.

Constant (mathematical). A value used in a mathematical computation that is the same every time it is used. For example, the relationship between the length of the circumference of a circle and the length of its diameter is a constant, 3.1416. This constant is called by the Greek name of Pi (π).

Constant differential mode (cabin pressurization). The mode of pressurization in which the cabin pressure is maintained a constant amount higher than the outside air pressure. The maximum differential pressure is determined by the structural strength of the aircraft cabin.

Constant-displacement pump. A fluid pump that moves a specific volume of fluid each time it rotates; the faster the pump turns, the more fluid it moves. Some form of pressure regulator or relief valve must be used with a constant-displacement pump when it is driven by an aircraft engine.

Constant-speed drive (CSD). A special drive system used to connect an alternating current generator to an aircraft engine. The drive holds the generator speed (and thus its frequency) constant as the engine speed varies.

Constantan. A copper-nickel alloy used as the negative lead of a thermocouple for measuring the cylinder head temperature of a reciprocating engine.

Contactor (electrical component). A remotely actuated, heavy-duty electrical switch. Contactors are used in an aircraft electrical system to connect the battery to the main bus.

Continuity tester. A troubleshooting tool that consists of a battery, a light bulb, and test leads. The test leads are connected to each end of the conductor under test, and if the bulb lights up, there is continuity. If it does not light up, the conductor is open.

Continuous Airworthiness Inspection Program. An inspection program that is part of a continuous airworthiness maintenance program approved for certain large airplanes (to which 14 CFR Part 125 is not applicable), turbojet multi-engine airplanes, turbopropeller-powered multi-engine airplanes, and turbine-powered rotorcraft.

Continuous-duty solenoid. A solenoid-type switch designed to be kept energized by current flowing through its coil for an indefinite period of time. The battery contactor in an aircraft electrical system is a continuous-duty solenoid. Current flows through its coil all the time the battery is connected to the electrical system.

Continuous-flow oxygen system. A type of oxygen system that allows a metered amount of oxygen to continuously flow into the mask. A rebreather-type mask is used with a continuous-flow system. The simplest form of continuous-flow oxygen system regulates the flow by a calibrated orifice in the outlet to the mask, but most systems use either a manual or automatic regulator to vary the pressure across the orifice proportional to the altitude being flown.

Continuous-loop fire-detection system. A fire-detection system that uses a continuous loop of two conductors separated with a thermistor-type insulation. Under normal temperature conditions, the thermistor material is an insulator; but if it is exposed to a fire, the thermistor changes into a conductor and completes the circuit between the two conductors, initiating a fire warning.

Control horn. The arm on a control surface to which the control cable or push-pull rod attaches to move the surface.

Control stick. The type of control device used in some airplanes. A vertical stick in the flight deck controls the ailerons by side-to-side movement and the elevators by fore-and-aft movement.

Control yoke. The movable column on which an airplane control wheel is mounted. The yoke may be moved in or out to actuate the elevators, and the control wheel may be rotated to actuate the ailerons.

Controllability. The characteristic of an aircraft that allows it to change its flight attitude in response to the pilot's movement of the flight deck controls.

Conventional current. An imaginary flow of electricity that is said to flow from the positive terminal of a power source, through the external circuit to its negative terminal. The arrowheads in semiconductor symbols point in the direction of conventional current flow.

Converging duct. A duct, or passage, whose cross-sectional area decreases in the direction of fluid flow.

Conversion coating. A chemical solution used to form an airtight oxide or phosphate film on the surface of aluminum or magnesium parts. The conversion coating prevents air from reaching the metal and keeps it from corroding.

Convex surface. A surface that is curved outward. The outer edges are lower than the center.

Coriolis effect. The change in rotor blade velocity to compensate for a change in the distance between the center of mass of the rotor blade and the axis rotation of the blade as the blades flap in flight.

Cornice brake. A large shop tool used to make straight bends across a sheet of metal. Cornice brakes are often called leaf brakes.

Corrugated metal. Sheets of metal that have been made more rigid by forming a series of parallel ridges or waves in its surface.

Cotter pin. A split metal pin used to safety a castellated or slotted nut on a bolt. The pin is passed through the hole in the shank of the bolt and the slots in the nut, and the ends of the pin are spread to prevent it backing out of the hole.

Countersinking. Preparation of a rivet hole for a flush rivet by beveling the edges of the holes with a cutter of the correct angle.

Coverite surface thermometer. A small surface-type bimetallic thermometer that calibrates the temperature of an iron used to heat-shrink polyester fabrics.

Crabbing. Pointing the nose of an aircraft into the wind to compensate for wind drift.

Crazing. A form of stress-caused damage that occurs in a transparent thermoplastic material. Crazing appears as a series of tiny, hair-like cracks just below the surface of the plastic.

Critical Mach number. The flight Mach number at which there is the first indication of supersonic airflow over any part of the aircraft structure.

Cross coat. A double coat of aircraft finishing material in which the second coat is sprayed at right angles to the first coat, before the solvents have evaporated from the first coat.

Cross-feed valve (fuel system component). A valve in a fuel system that allows any of the engines of a multi-engine aircraft to draw fuel from any fuel tank. Cross-feed systems are used to allow a multi-engine aircraft to maintain a balanced fuel condition.

Cross-flow valve. An automatic flow-control valve installed between the gear-up and gear-down lines of the landing gear of some large airplanes. When the landing gear is released from its uplocks, its weight causes it to fall faster than the hydraulic system can supply fluid to the gear-down side of the actuation cylinder. The cross-flow valve opens and directs fluid from the gear-up side into the gear-down side. This allows the gear to move down with a smooth motion.

CRT. Cathode-ray tube.

Cryogenic liquid. A liquid which boils at temperatures of less than about 110 °F (–163 °C) at normal atmospheric pressures.

Cuno filter. The registered trade name for a particular style of edge-type fluid filter. Cuno filters are made up of a stack of thin metal discs that are separated by thin scraper blades. Contaminants collect on the edge of the discs, and they are periodically scraped out and allowed to collect in the bottom of the filter case for future removal.

Current. A general term used for electrical flow. See conventional current.

Current limiter. An electrical component used to limit the amount of current a generator can produce. Some current limiters are a type of slow-blow fuse in the generator output. Other current limiters reduce the generator output voltage if the generator tries to put out more than its rated current.

Cusp. A pointed end.

Cyclic pitch control. The helicopter control that allows the pilot to change the pitch of the rotor blades individually, at a specific point in their rotation. The cyclic pitch control allows the pilot to tilt the plane of rotation of the rotor disc to change the direction of lift produced by the rotor.

D

Dacron. The registered trade name for a cloth woven from polyester fibers.

Damped oscillation. Oscillation whose amplitude decreases with time.

Database. A body of information that is available on any particular subject.

Data bus. A wire or group of wires that are used to move data within a computer system.

Debooster valve. A valve in a power brake system between the power brake control valve and the wheel cylinder. This valve lowers the pressure of the fluid going to the brake and increases its volume. A debooster valve increases the smoothness of brake application and aids in rapid release of the brakes.

Decay. The breakdown of the structure of wood fibers. Wood that shows any indication of decay must be rejected for use in aircraft structure.

Decomposition. The breakdown of the structure of wood fibers. Wood that shows any indication of decay must be rejected for use in aircraft structure.

Deciduous. A type of tree that sheds its foliage at the end of the growing season. Hardwoods come from deciduous trees.

Dedicated computer. A small digital computer, often built into an instrument or control device that contains a built-in program that causes it to perform a specific function.

Deep-vacuum pump. A vacuum pump capable of removing almost all of the air from a refrigeration system. A deep-vacuum pump can reduce the pressure inside the system to a few microns of pressure.

Deflator cap. A cap for a tire, strut, or accumulator air valve that, when screwed onto the valve, depresses the valve stem and allows the air to escape safely through a hole in the side of the cap.

Deicer system. A system that removes ice after it has formed on an aircraft.

Delamination. The separation of the layers of a laminated material.

Delivery air duct check valve. An isolation valve at the discharge side of the air turbine that prevents the loss of pressurization through a disengaged cabin air compressor.

Delta airplane. An airplane with a triangular-shaped wing. This wing has an extreme amount of sweepback on its leading edge, and a trailing edge that is almost perpendicular to the longitudinal axis of the airplane.

Delta connection (electrical connection). A method of connecting three electrical coils into a ring or, as they are drawn on a schematic diagram as a triangle, a delta (D).

Denier. A measure of the fineness of the yarns in a fabric.

Density altitude. The altitude in standard air at which the

density is the same as that of the existing air.

Density ratio (σ). The ratio of the density of the air at a given altitude to the density of the air at sea level under standard conditions.

Derated (electrical specification). Reduction in the rated voltage or current of an electrical component. Derating is done to extend the life or reliability of the device.

Desiccant (air conditioning component). A drying agent used in an air conditioning system to remove water from the refrigerant. A desiccant is made of silica-gel or some similar material.

Detent. A spring-loaded pin or tab that enters a hole or groove when the device to which it is attached is in a certain position. Detents are used on a fuel valve to provide a positive means of identifying the fully on and fully off position of the valve.

Detonation. An explosion, or uncontrolled burning of the fuel-air mixture inside the cylinder of a reciprocating engine. Detonation occurs when the pressure and the temperature inside the cylinder become higher than the critical pressure and temperature of the fuel. Detonation is often confused with preignition.

Deviation error. An error in a magnetic compass caused by localized magnetic fields in the aircraft. Deviation error, which is different on each heading, is compensated by the technician "swinging" the compass. A compass must be compensated so the deviation error on any heading is no greater than 10 degrees.

Dewar bottle. A vessel designed to hold liquefied gases. It has double walls with the space between being evacuated to prevent the transfer of heat. The surfaces in the vacuum area are made heat-reflective.

Differential aileron travel. Aileron movement in which the upward-moving aileron deflects a greater distance than the one moving downward. The up aileron produces parasite drag to counteract the induced drag caused by the down aileron. Differential aileron travel is used to counteract adverse yaw.

Differential pressure. The difference between two pressures. An airspeed indicator is a differential-pressure gauge. It measures the difference between static air pressure and pitot air pressure.

Differential-voltage reverse-current cutout. A type of reverse-current cutout switch used with heavy-duty electrical systems. This switch connects the generator to the electrical bus when the generator voltage is a specific amount higher than the battery voltage.

Digital multimeter. An electrical test instrument that can be used to measure voltage, current, and resistance. The indication is in the form of a liquid crystal display in discrete numbers.

Dihedral. The positive angle formed between the lateral axis of an airplane and a line that passes through the center of the wing or horizontal stabilizer. Dihedral increases the lateral stability of an airplane.

Diluter-demand oxygen system. A popular type of oxygen system in which the oxygen is metered to the mask, where it is diluted with cabin air by an airflow-metering aneroid assembly which regulates the amount of air allowed to dilute the oxygen on the basis of cabin altitude. The mixture of oxygen and air flows only when the wearer of the mask inhales. The percentage of oxygen in the air delivered to the mask is regulated, on the basis of altitude, by the regulator. A diluter-demand regulator has an emergency position which allows 100 percent oxygen to flow to the mask, by-passing the regulating mechanism.

Dipole antenna. A half wavelength, center-fed radio antenna. The length of each of the two arms is approximately one fourth of the wavelength of the center frequency for which the antenna is designed.

Dirigible. A large, cigar-shaped, rigid, lighter-than-air flying machine. Dirigibles are made of a rigid truss structure covered with fabric. Gas bags inside the structure contain the lifting gas, which is either helium or hydrogen.

Disc **area (helicopter specification).** The total area swept by the blades of a helicopter main rotor.

Divergent oscillation. Oscillation whose amplitude increases with time.

Diverging duct. A duct, or passage, whose cross-sectional area increases in the direction of fluid flow.

DME. Distance measuring equipment.

Dope proofing. The treatment of a structure to be covered with fabric to keep the solvents in the dope from softening the protective coating on the structure.

Dope roping. A condition of aircraft dope brushed onto a surface in such a way that it forms a stringy, uneven surface rather than flowing out smoothly.

Double-acting actuator (hydraulic system component). A linear actuator moved in both directions by fluid power.

Double-acting hand pump (hydraulic system component). A hand-operated fluid pump that moves fluid during both strokes of the pump handle.

Doubler. A piece of sheet metal used to strengthen and stiffen a repair in a sheet metal structure.

Downtime. Any time during which an aircraft is out of commission and unable to be operated.

Downwash. Air forced down by aerodynamic action below and behind the wing of an airplane or the rotor of a helicopter. Aerodynamic lift is produced when the air is deflected downward. The upward force on the aircraft is the same as the downward force on the air.

Drag (helicopter rotor blade movement). Fore-and-aft movement of the tip of a helicopter rotor blade in its plane of rotation.

Dragging brakes. Brakes that do not fully release when the brake pedal is released. The brakes are partially applied all the time, which causes excessive lining wear and heat.

Drag wire. A structural wire inside a Pratt truss airplane wing between the spars. Drag wires run from the front spar inboard, to the rear spar at the next bay outboard. Drag wires oppose the forces that try to drag the wing backward.

Drill motor. An electric or pneumatic motor that drives a chuck that holds a twist drill. The best drill motors produce high torque, and their speed can be controlled.

Drip stick. A fuel quantity indicator used to measure the fuel level in the tank when the aircraft is on the ground. The drip stick is pulled down from the bottom of the tank until fuel drips from its opened end. This indicates that the top of the gauge inside the tank is at the level of the fuel. Note the number of inches read on the outside of the gauge at the point it contacts the bottom of the tank, and use a drip stick table to convert this measurement into gallons of fuel in the tank.

Dry air pump. An engine-driven air pump which used carbon vanes. Dry pumps do not use any lubrication, and the vanes are extremely susceptible to damage from the solid airborne particles. These pumps must be operated with filters in their inlet so they will take in only filtered air.

Dry ice. Solidified carbon dioxide. Dry ice sublimates, or changes from a solid directly into a gas, at a temperature of –110 °F (–78.5 °C).

Dry rot. Decomposition of wood fibers caused by fungi. Dry rot destroys all strength in the wood.

Ductility. The property of a material that allows it to be drawn into a thin section without breaking.

Dummy load (electrical load). A noninductive, high-power, 50-ohm resistor that can be connected to a transmission line in place of the antenna. The transmitter can be operated into the dummy load without transmitting any signal.

Duralumin. The name for the original alloy of aluminum, magnesium, manganese, and copper. Duralumin is the same as the modern 2017 aluminum alloy.

Dutch roll. An undesirable, low-amplitude coupled oscillation about both the yaw and roll axes that affects many swept wing airplanes. Dutch roll is minimized by the use of a yaw damper.

Dutchman shears. A common name for compound-action sheet metal shears.

Dynamic pressure (q). The pressure a moving fluid would have if it were stopped. Dynamic pressure is measured in pounds per square foot.

Dynamic stability. The stability that causes an aircraft to return to a condition of straight and level flight after it has been disturbed from this condition. When an aircraft is disturbed from the straight and level flight, its static stability starts it back in the correct direction; but it overshoots, and the corrective forces are applied in the opposite direction. The aircraft oscillates back and forth on both sides of the correct condition, with each oscillation smaller than the one before it. Dynamic stability is the decreasing of these restorative oscillations.

E

EADI. Electronic Attitude Director Indicator.

ECAM. Electronic Centralized Aircraft Monitor.

Eccentric brushing. A special bushing used between the rear spar of certain cantilever airplane wings and the wing attachment fitting on the fuselage. The portion of the bushing that fits through the hole in the spar is slightly offset from that which passes through the holes in the fitting. By rotating the bushing, the rear spar may be moved up or down to adjust the root incidence of the wing.

Eddy current damping (electrical instrument damping). Decreasing the amplitude of oscillations by the interaction of magnetic fields. In the case of a vertical-card magnetic compass, flux from the oscillating permanent magnet produces eddy currents in a damping disc or cup. The magnetic flux produced by the eddy currents opposes the flux from the permanent magnet and decreases the oscillations.

Edge distance. The distance between the center of a rivet hole and the edge of the sheet of metal.

EFIS. Electronic Flight Instrument System.

EHSI. Electronic Horizontal Situation Indicator.

EICAS. Engine Indicating and Crew Alerting System.

Ejector. A form of jet pump used to pick up a liquid and move it to another location. Ejectors are used to ensure that the compartment in which the boost pumps are mounted is kept full of fuel. Part of the fuel from the boost pump flowing through the ejector produces a low pressure that pulls fuel from the main tank and forces it into the boostpump sump area.

Elastic limit. The maximum amount of tensile load, in pounds per square inch, a material is able to withstand without being permanently deformed.

Electromotive force (EMF). The force that causes electrons to move from one atom to another within an electrical circuit. Electromotive force is an electrical pressure, and it is measured in volts.

Electron current. The actual flow of electrons in a circuit. Electrons flow from the negative terminal of a power source through the external circuit to its positive terminal. The arrowheads in semiconductor symbols point in the direction opposite to the flow of electron current.

ELT (emergency locator transmitter). A self-contained radio transmitter that automatically begins transmitting on the emergency frequencies any time it is triggered by a severe impact parallel to the longitudinal axis of the aircraft.

Elevator downspring. A spring in the elevator control system that produces a mechanical force that tries to lower the elevator. In normal flight, this spring force is overcome by the aerodynamic force from the elevator trim tab. But in slow flight with an aft CG position, the trim tab loses its effectiveness and the downspring lowers the nose to prevent a stall.

Elevons. Movable control surfaces on the trailing edge of a delta wing or a flying wing airplane. These surfaces operate together to serve as elevators, and differentially to act as ailerons.

EMI. Electromagnetic interference.

Empennage. The tail section of an airplane.

Enamel. A type of finishing material that flows out to form a smooth surface. Enamel is usually made of a pigment suspended in some form of resin. When the resin cures, it leaves a smooth, glossy protective surface.

Energizing brake. A brake that uses the momentum of the aircraft to increase its effectiveness by wedging the shoe against the brake drum. Energizing brakes are also called servo brakes. A single-servo brake is energizing only when moving in the forward direction, and a duo-servo brake is energizing when the aircraft is moving either forward or backward.

Epoxy. A flexible, thermosetting resin that is made by polymerization of an epoxide. Epoxy has wide application as a matrix for composite materials and as an adhesive that bonds many different types of materials. It is noted for its durability and its chemical resistance.

Equalizing resistor. A large resistor in the ground circuit of a heavy-duty aircraft generator through which all of the generator output current flows. The voltage drop across this resistor is used to produce the current in the paralleling circuit that forces the generators to share the electrical load equally.

Ethylene dibromide. A chemical compound added to aviation gasoline to convert some of the deposits left by the tetraethyl lead into lead bromides. These bromides are volatile and will pass out of the engine with the exhaust gases.

Ethylene glycol. A form of alcohol used as a coolant for liquid-cooled engines and as an anti-icing agent.

Eutectic material. An alloy or solution that has the lowest possible melting point.

Evacuation (air conditioning servicing procedure). A procedure in servicing vapor-cycle cooling systems. A vacuum pump removes all the air from the system. Evacuation removes all traces of water vapor that could condense out, freeze, and block the system.

Evaporator (air conditioning component). The component in a vapor-cycle cooling system in which heat from the aircraft cabin is absorbed into the refrigerant. As the heat is absorbed, the refrigerant evaporates, or changes from a liquid into a vapor. The function of the evaporator is to lower the cabin air temperature.

Expander-tube brake. A brake that uses hydraulic fluid inside a synthetic rubber tube around the brake hub to force rectangular blocks of brake-lining material against the rotating brake drum. Friction between the brake drum and the lining material slows the aircraft.

Expansion wave. The change in pressure and velocity of a supersonic flow of air as it passes over a surface which drops away from the flow. As the surface drops away, the air tries to follow it. In changing its direction, the air speeds up to a higher supersonic velocity and its static pressure decreases. There is no change in the total energy as the air passes through an expansion wave, and so there is no sound as there is when air passes through a shock wave.

Extruded angle. A structural angle formed by passing metal heated to its plastic state through specially shaped dies.

F

FAA Form 337. The FAA form that must be filled in and submitted to the FAA when a major repair or major alteration has been completed.

Federal Aviation Administration Flight Standards District Office (FAA FSDO). An FAA field office serving an assigned geographical area staffed with Flight Standards personnel who serve the aviation industry and the general public on matters relating to certification and operation of air carrier and general aviation aircraft.

Fading of brakes. The decrease in the amount of braking action that occurs with some types of brakes that are applied for a long period of time. True fading occurs with overheated drum-type brakes. As the drum is heated, it expands in a bell-mouthed fashion. This decreases the amount of drum in contact with the brake shoes and decreases the braking action. A condition similar to brake fading occurs when there is an internal leak in the brake master cylinder. The brakes are applied, but as the pedal is held down, fluid leaks past the piston, and the brakes slowly release.

Fairing. A part of a structure whose primary purpose is to produce a smooth surface or a smooth junction where two surfaces join.

Fairlead. A plastic or wooden guide used to prevent a steel control cable rubbing against an aircraft structure.

FCC. Federal Communications Commission.

FCC. Flight Control Computer.

Feather (helicopter rotor blade movement). Rotation of a helicopter rotor blade about its pitch-change axis.

Ferrous metal. Any metal that contains iron and has magnetic characteristics.

Fiber stop nut. A form of a self-locking nut that has a fiber insert crimped into a recess above the threads. The hole in the insert is slightly smaller than the minor diameter of the threads. When the nut is screwed down over the bolt threads, the opposition caused by the fiber insert produces a force that prevents vibration loosening the nut.

File. A hand-held cutting tool used to remove a small amount of metal with each stroke.

Fill threads. Threads in a piece of fabric that run across the width of the fabric, interweaving with the warp threads. Fill threads are often called woof, or weft, threads.

Fillet. A fairing used to give shape but not strength to an object. A fillet produces a smooth junction where two surfaces meet.

Finishing tape. Another name for surface tape. See surface tape.

Fishmouth splice. A type of splice used in a welded tubular structure in which the end of the tube whose inside diameter is the same as the outside diameter of the tube being spliced is cut in the shape of a V, or a fishmouth, and is slipped over the smaller tube welded. A fishmouth splice has more weld area than a butt splice and allows the stresses from one tube to transfer into the other tube gradually.

Fire pull handle. The handle in an aircraft flight deck that is pulled at the first indication of an engine fire. Pulling this handle removes the generator from the electrical system, shuts off the fuel and hydraulic fluid to the engine, and closes the compressor bleed air valve. The fire extinguisher agent discharge switch is uncovered, but it is not automatically closed.

Fire zone. A portion of an aircraft designated by the manufacturer to require fire-detection and/or fire-extinguishing equipment and a high degree of inherent fire resistance.

Fitting. An attachment device that is used to connect components to an aircraft structure.

Fixed fire-extinguishing system. A fire-extinguishing system installed in an aircraft.

Flameout. A condition in the operation of a gas turbine engine in which the fire in the engine unintentionally goes out.

Flap (aircraft control). A secondary control on an airplane wing that changes its camber to increase both its lift and its drag.

Flap (helicopter rotor blade movement). Up-and-down movement of the tip of a helicopter rotor blade.

Flap overload valve. A valve in the flap system of an airplane that prevents the flaps being lowered at an airspeed which could cause structural damage. If the pilot tries to extend the flaps when the airspeed is too high, the opposition caused by the air flow will open the overload valve and return the fluid to the reservoir.

Flash point. The temperature to which a material must be raised for it to ignite, but not continue to burn, when a flame is passed above it.

Flat pattern layout. The pattern for a sheet metal part that has the material used for each flat surface, and for all of the bends, marked out with bend-tangent lines drawn between the flats and bend allowances.

Flight controller. The component in an autopilot system that allows the pilot to maneuver the aircraft manually when the autopilot is engaged.

Fluid. A form of material whose molecules are able to flow past one another without destroying the material. Gases and liquids are both fluids.

Fluid power. The transmission of force by the movement of a fluid. The most familiar examples of fluid power systems are hydraulic and pneumatic systems.

Flutter. Rapid and uncontrolled oscillation of a flight control surface on an aircraft that is caused by a dynamically unbalanced condition.

Fly-by-wire. A method of control used by some modern aircraft in which control movement or pressures exerted by the pilot are directed into a digital computer where they are input into a program tailored to the flight characteristics of the aircraft. The computer output signal is sent to actuators at the control surfaces to move them the optimum amount for the desired maneuver.

Flying boat. An airplane whose fuselage is built in the form of a boat hull to allow it to land and takeoff from water. In the past, flying boats were a popular form of large airplane.

Flying wing. A type of heavier-than-air aircraft that has no fuselage or separate tail surfaces. The engines and useful load are carried inside the wing, and movable control surfaces on the trailing edge provide both pitch and roll control.

Foot-pound. A measure of work accomplished when a force of 1 pound moves an object a distance of 1 foot.

Force. Energy brought to bear on an object that tends to cause motion or to change motion.

Forehand welding. Welding in which the torch is pointed in the direction the weld is progressing.

Form drag. Parasite drag caused by the form of the object passing through the air.

Former. An aircraft structural member used to give a fuselage its shape.

FMC. Flight Management Computer.

Forward bias. A condition of operation of a semiconductor device such as a diode or transistor in which a positive voltage is connected to the P-type material and a negative voltage to the N-type material.

FPD. Freezing point depressant.

Fractional distillation. A method of separating the various components from a physical mixture of liquids. The material to be separated is put into a container and its temperature is increased. The components having the lowest boiling points boil off first and are condensed. Then, as the temperature is further raised, other components are removed. Kerosene, gasoline, and other petroleum products are obtained by fractional distillation of crude oil.

Frangible. Breakable, or easily broken.

Freon. The registered trade name for a refrigerant used in a vapor-cycle air conditioning system.

Frise aileron. An aileron with its hinge line set back from the leading edge so that when it is deflected upward, part of the leading edge projects below the wing and produces parasite drag to help overcome adverse yaw.

Full-bodied. Not thinned.

Fully articulated rotor. A helicopter rotor whose blades are attached to the hub in such a way that they are free to flap,

drag, and feather. See each of these terms.

Frost. Ice crystal deposits formed by sublimation when the temperature and dew point are below freezing.

Fuel-flow transmitter. A device in the fuel line between the engine-driven fuel pump and the carburetor that measures the rate of flow of the fuel. It converts this flow rate into an electrical signal and sends it to an indicator in the instrument panel.

Fuel jettison system. A system installed in most large aircraft that allows the flight crew to jettison, or dump, fuel to lower the gross weight of the aircraft to its allowable landing weight. Boost pumps in the fuel tanks move the fuel from the tank into a fuel manifold. From the fuel manifold, it flows away from the aircraft through dump chutes is each wing tip. The fuel jettison system must be so designed and constructed that it is free from fire hazards.

Fuel totalizer. A fuel quantity indicator that gives the total amount of fuel remaining on board the aircraft on one instrument. The totalizer adds the quantities of fuel in all of the tanks.

Fungus (plural: fungi). Any of several types of plant life that include yeasts, molds, and mildew.

Fusible plugs. Plugs in the wheels of high-performance airplanes that use tubeless tires. The centers of the plugs are filled with a metal that melts at a relatively low temperature. If a takeoff is aborted and the pilot uses the brakes excessively, the heat transferred into the wheel will melt the center of the fusible plugs and allow the air to escape from the tire before it builds up enough pressure to cause an explosion.

G

Gauge (rivet). The distance between rows of rivets in a multirow seam. Gauge is also called transverse pitch.

Gauge pressure. Pressure referenced from the existing atmospheric pressure.

Galling. Fretting or pulling out chunks of a surface by sliding contact with another surface or body.

Gasket. A seal between two parts where there is no relative motion.

Gear-type pump. A constant-displacement fluid pump that contains two meshing large-tooth spur gears. Fluid is drawn into the pump as the teeth separate and is carried around the inside of the housing with teeth and is forced from the pump when the teeth come together.

Generator. A mechanical device that transforms mechanical energy into electrical energy by rotating a coil inside a magnetic field. As the conductors in the coil cut across the lines of magnetic flux, a voltage is generated that causes current to flow.

Generator series field. A set of heavy field windings in a generator connected in a series with the armature. The magnetic field produced by the series windings is used to change the characteristics of the generator.

Generator shunt field. A set of field windings in a generator connected in parallel with the armature. Varying the amount of current flowing in the shunt field windings controls the voltage output of the generator.

Gerotor pump. A form of constant-displacement gear pump. A gerotor pump uses an external-tooth spur gear that rides inside of and drives an internal-tooth rotor gear. There is one more tooth space inside the rotor than there are teeth on the drive gear. As the gears rotate, the volume of the space between two of the teeth on the inlet side of the pump increases, while the volume of the space between the two teeth on the opposite side of the pump decreases.

GHz (gigahertz). 1,000,000,000 cycles per second.

Gimbal. A support that allows a gyroscope to remain in an upright condition when its base is tilted.

Glass flight deck. An aircraft instrument system that uses a few cathode-ray-tube displays to replace a large number of mechanically actuated instruments.

Glaze ice. Ice that forms when large drops of water strike a surface whose temperature is below freezing. Glaze ice is clear and heavy.

Glide slope. The portion of an ILS (Instrument Landing System) that provides the vertical path along which an aircraft descends on an instrument landing.

Goniometer. Electronic circuitry in an ADF system that uses the output of a fixed loop antenna to sense the angle between a fixed reference, usually the nose of the aircraft, and the direction from which the radio signal is being received.

Gram. The basic unit of weight or mass in the metric system. One gram equals approximately 0.035 ounce.

Graphite. A form of carbon. Structural graphite is used in

composite structure because of its strength and stiffness.

Greige (pronounced "gray"). The unshrunk condition of a polyester fabric as it is removed from the loom.

Ground effect. The increased aerodynamic lift produced when an airplane or helicopter is flown nearer than half wing span or rotor span to the ground. This additional lift is caused by an effective increase in angle of attack without the accompanying increase in induced drag, which is caused by the deflection of the downwashed air.

Ground. The voltage reference point in an aircraft electrical system. Ground has zero electrical potential. Voltage values, both positive and negative, are measured from ground. In the United Kingdom, ground is spoken of as "earth."

Ground-power unit (GPU). A service component used to supply electrical power to an aircraft when it is being operated on the ground.

Guncotton. A highly explosive material made by treating cotton fibers with nitric and sulfuric acids. Guncotton is used in making the film base of nitrate dope.

Gusset. A small plate attached to two or more members of a truss structure. A gusset strengthens the truss.

Gyro (gyroscope). The sensing device in an autopilot system. A gyroscope is a rapidly spinning wheel with its weight concentrated around its rim. Gyroscopes have two basic characteristics that make them useful in aircraft instruments: rigidity in space and precession. See rigidity in space and precession.

Gyroscopic precession. The characteristic of a gyroscope that causes it to react to an applied force as though the force were applied at a point 90° in the direction of rotation from the actual point of application. The rotor of a helicopter acts in much the same way as a gyroscope and is affected by gyroscopic precession.

H

Halon 1211. A halogenated hydrocarbon fire-extinguishing agent used in many HRD fire-extinguishing systems for powerplant protection. The technical name for Halon 1211 is bromochlorodifluoromethane.

Halon 1301. A halogenated hydrocarbon fire-extinguishing agent that is one of the best for extinguishing cabin and powerplant fires. It is highly effective and is the least toxic of the extinguishing agents available. The technical name for Halon 1301 is bromotrifluoromethane.

Hangar rash. Scrapes, bends, and dents in an aircraft structure caused by careless handling.

Hardwood. Wood from a broadleaf tree that sheds its leaves each year.

Heading indicator. A gyroscopic flight instrument that gives the pilot an indication of the heading of the aircraft.

Heat exchanger. A device used to exchange heat from one medium to another. Radiators, condensers, and evaporators are all examples of heat exchangers. Heat always moves from the object or medium having the greatest level of heat energy to a medium or object having a lower level.

Helix. A screw-like, or spiral, curve.

Hertz. One cycle per second.

Holding relay. An electrical relay that is closed by sending a pulse of current through the coil. It remains closed until the current flowing through its contacts is interrupted.

Homebuilt aircraft. Aircraft that are built by individuals as a hobby rather than by factories as commercial products. Homebuilt, or amateur-built, aircraft are not required to meet the stringent requirements imposed on the manufacture of FAA-certified aircraft.

Horsepower. A unit of mechanical power that is equal to 33,000 foot-pounds of work done in 1 minute, or 550 foot-pounds of work done in 1 second.

Hot dimpling. A process used to dimple, or indent, the hole into which a flush rivet is to be installed. Hot dimpling is done by clamping the metal between heating elements and forcing the dies through the holes in the softened metal. Hot dimpling prevents hard metal from cracking when it is dimpled.

Hot-wire cutter. A cutter used to shape blocks of Styrofoam. The wire is stretched tight between the arms of a frame and heated by electrical current. The hot wire melts its way through the foam.

HRD. High-rate-discharge.

HSI. Horizontal situation indicator.

Hydraulic actuator. The component in a hydraulic system that converts hydraulic pressure into mechanical force. The two main types of hydraulic actuators are linear actuators

(cylinders and pistons) and rotary actuators (hydraulic motors).

Hydraulic fuse. A type of flow control valve that allows a normal flow of fluid in the system but, if the flow rate is excessive, or if too much fluid flows for normal operation, the fuse will shut off all further flow.

Hydraulic motor. A hydraulic actuator that converts fluid pressure into rotary motion. Hydraulic motors have an advantage in aircraft installations over electric motors, because they can operate in a stalled condition without the danger of a fire.

Hydraulic power pack. A small, self-contained hydraulic system that consists of a reservoir, pump, selector valves, and relief valves. The power pack is removable from the aircraft as a unit to facilitate maintenance and service.

Hydraulics. The system of fluid power which transmits force through an incompressible fluid.

Hydrocarbon. An organic compound that contains only carbon and hydrogen. The vast majority of fossil fuels, such as gasoline and turbine-engine fuel, are hydrocarbons.

Hydroplaning. A condition that exists when a high-speed airplane is landed on a water-covered runway. When the brakes are applied, the wheels lock up and the tires skid on the surface of the water in much the same way a water ski rides on the surface. Hydroplaning develops enough heat in a tire to ruin it.

Hydrostatic test. A pressure test used to determine the serviceability of high-pressure oxygen cylinders. The cylinders are filled with water and pressurized to 5⁄3 of their working pressure. Standard-weight cylinders (DOT 3AA) must by hydrostatically tested every five years, and lightweight cylinders (DOT 3HT) must be tested every three years.

Hypersonic speed. Speed of greater than Mach 5 (5 times the speed of sound).

Hyperbolic navigation. Electronic navigation systems that determine aircraft location by the time difference between reception of two signals. Signals from two stations at different locations will be received in the aircraft at different times. A line plotted between two stations along which the time difference is the same forms a hyperbola.

Hypoxia. A physiological condition in which a person is deprived of the needed oxygen. The effects of hypoxia normally disappear as soon as the person is able to breathe air containing sufficient oxygen.

I

ICAO. The International Civil Aeronautical Organization.

Icebox rivet. A solid rivet made of 2017 or 2024 aluminum alloy. These rivets are too hard to drive in the condition they are received from the factory, and must be heat-treated to soften them. They are heated in a furnace and then quenched in cold water. Immediately after quenching they are soft, but within a few hours at room temperature they become quite hard. The hardening can be delayed for several days by storing them in a subfreezing icebox and holding them at this low temperature until they are to be used.

IFR. Instrument flight rules.

Inch-pound. A measure of work accomplished when a force of 1 pound moves an object a distance of 1 inch.

Indicated airspeed (IAS). The airspeed as shown on an airspeed indicator with no corrections applied.

Induced current. Electrical current produced in a conductor when it is moved through or crossed by a magnetic field.

Induced drag. Aerodynamic drag produced by an airfoil when it is producing lift. Induced drag is affected by the same factors that affect induced lift.

Induction time. The time allowed an epoxy or polyurethane material between its initial mixing and its application. This time allows the materials to begin their cure.

Infrared radiation. Electromagnetic radiation whose wavelengths are longer than those of visible light.

Ingot. A large block of metal that was molded as it was poured from the furnace. Ingots are further processed into sheets, bars, tubes, or structural beams.

INS. Inertial Navigation System.

Inspection Authorization (IA). An authorization that may be issued to an experienced aviation maintenance technician who holds both an Airframe and Powerplant rating. It allows the holder to conduct annual inspections and to approve an aircraft or aircraft engine for return to service after a major repair or major alteration.

Integral fuel tank. A fuel tank which is formed by sealing off part of the aircraft structure and using it as a fuel tank. An integral wing tank is called a “wet wing.” Integral tanks are used because of their large weight saving. The only way

of repairing an integral fuel tank is by replacing damaged sealant and making riveted repairs, as is done with any other part of the aircraft structure.

Interference drag. Parasite drag caused by air flowing over one portion of the airframe interfering with the smooth flow of air over another portion.

Intermittent-duty solenoid. A solenoid-type switch whose coil is designed for current to flow through it for only a short period of time. The coil will overheat if current flows through it too long.

IRS. Inertial Reference System.

IRU. Inertial Reference Unit.

Iso-octane. A hydrocarbon, C_8H_{18}, which has very high critical pressure and temperature. Iso-octane is used as the high reference for measuring the antidetonation characteristics of a fuel.

Isobaric mode. The mode of pressurization in which the cabin pressure is maintained at a constant value regardless of the outside air pressure.

Isogonic line. A line drawn on an aeronautical chart along which the angular difference between the magnetic and geographic north poles is the same.

Isopropyl alcohol. A colorless liquid used in the manufacture of acetone and its derivatives and as a solvent and anti-icing agent.

J

Jackscrew. A hardened steel rod with strong threads cut into it. A jackscrew is rotated by hand or with a motor to apply a force or to lift an object.

Jet pump. A special venturi in a line carrying air from certain areas in an aircraft that need an augmented flow of air through them. High-velocity compressor bleed air is blown into the throat of a venturi where it produces a low pressure that pulls air from the area to which it is connected. Jet pumps are often used in the lines that pull air through galleys and toilet areas.

Joggle. A small offset near the edge of a piece of sheet metal. It allows one sheet of metal to overlap another sheet while maintaining a flush surface.

Jointer. A woodworking power tool used to smooth edges of a piece of wood.

K

K-factor. A factor used in sheet metal work to determine the setback for other than a 90° bend. Setback = K · (bend radius + metal thickness). For bends of less than 90°, the value of K is less than 1; for bends greater than 90°, the value of K is greater than 1.

Kevlar. A patented synthetic aramid fiber noted for its flexibility and light weight. It is to a great extent replacing fiberglass as a reinforcing fabric for composite construction.

Key (verb). To initiate an action by depressing a key or a button.

kHz (kilohertz). 1,000 cycles per second.

Kick-in pressure. The pressure at which an unloading valve causes a hydraulic pump to direct its fluid into the system manifold.

Kick-out pressure. The pressure at which an unloading valve shuts off the flow of fluid into the system pressure manifold and directs it back to the reservoir under a much reduced pressure.

Kilogram. One thousand grams.

Kinetic energy. Energy that exists because of motion.

Knot (wood defect). A hard, usually round section of a tree branch embedded in a board. The grain of the knot is perpendicular to the grain of the board. Knots decrease the strength of the board and should be avoided where strength is needed.

Knot (measure of speed). A speed measurement that is equal to one nautical mile per hour. One knot is equal to 1.15 statute mile per hour.

Kollsman window. The barometric scale window of a sensitive altimeter. See barometric scale.

Koroseal lacing. A plastic lacing material available in round or rectangular cross sections and used for holding wire bundles and tubing together. It holds tension on knots indefinitely and is impervious to petroleum products.

Kraft paper. A tough brown wrapping paper, like that used for paper bags.

L

Lacquer. A finishing material made of a film base, solvents, plasticizers, and thinners. The film base forms a tough film over the surface when it dries. The solvents dissolve the film base so it can be applied as a liquid. The plasticizers give the film base the needed resilience, and the thinners dilute the lacquer so it can be applied with a spray gun. Lacquer is sprayed on the surface as a liquid, and when the solvents and thinners evaporate, the film base remains as a tough decorative and protective coating.

Landing gear warning system. A system of lights used to indicate the condition of the landing gear. A red light illuminates when any of the gears are in an unsafe condition; a green light shows when all of the gears are down and locked, and no light is lit when the gears are all up and locked. An aural warning system is installed that sounds a horn if any of the landing gears are not down and locked when the throttles are retarded for landing.

Laminar flow. Airflow in which the air passes over the surface in smooth layers with a minimum of turbulence.

Laminated wood. A type of wood made by gluing several pieces of thin wood together. The grain of all pieces runs in the same direction.

Latent heat. Heat that is added to a material that causes a change in its state without changing its temperature.

Lateral axis. An imaginary line, passing through the center of gravity of an airplane, and extending across it from wing tip to wing tip.

Lay-up. The placement of the various layers of resin-impregnated fabric in the mold for a piece of laminated composite material.

L/D ratio. A measure of efficiency of an airfoil. It is the ratio of the lift to the total drag at a specified angle of attack.

Left-right indicator. The course-deviation indicator used with a VOR navigation system.

Lightening hole. A hole cut in a piece of structural material to get rid of weight without losing any strength. A hole several inches in diameter may be cut in a piece of metal at a point where the metal is not needed for strength, and the edges of the hole are flanged to give it rigidity. A piece of metal with properly flanged lightening holes is more rigid than the metal before the holes were cut.

Linear actuator. A fluid power actuator that uses a piston moving inside a cylinder to change pressure into linear, or straight-line, motion.

Linear change. A change in which the output is directly proportional to the input.

Loadmeter. A current meter used in some aircraft electrical systems to show the amount of current the generator or alternator is producing. Loadmeters are calibrated in percent of the generator rated output.

Localizer. The portion of an ILS (Instrument Landing System) that directs the pilot along the center line of the instrument runway.

Lodestone. A magnetized piece of natural iron oxide.

Logic flow chart. A type of graphic chart that can be made up for a specific process or procedure to help follow the process through all of its logical steps.

Longitudinal axis. An imaginary line, passing through the center of gravity of an airplane, and extending lengthwise through it from nose to tail.

Longitudinal stability. Stability of an aircraft along its longitudinal axis and about its lateral axis. Longitudinal stability is also called pitch stability.

LORAN A. Long Range Aid to Navigation. A hyperbolic navigation system that operates with frequencies of 1,950 kHz, 1,850 kHz, and 1,900 kHz.

LORAN C. The LORAN system used in aircraft. It operates on a frequency of 100 kHz.

LRU. Line replaceable unit.

Lubber line. A reference on a magnetic compass and directional gyro that represents the nose of the aircraft. The heading of the aircraft is shown on the compass card opposite the lubber line.

M

Mach number. A measurement of speed based on the ratio of the speed of the aircraft to the speed of sound under the same atmospheric conditions. An airplane flying at Mach 1 is flying at the speed of sound.

Magnetic bearing. The direction to or from a radio transmitting station measured relative to magnetic north.

Major alteration. An alteration not listed in the aircraft, aircraft engine, or propeller specifications. It is one that might appreciably affect weight, balance, structural strength performance, powerplant operation, flight characteristics, or other qualities affecting airworthiness, or that cannot be made with elementary operations.

Major repair. A repair to an aircraft structure or component that if improperly made might appreciably affect weight, balance, structural strength, performance, powerplant operation, flight characteristics, or other qualities affecting airworthiness, or that is not done according to accepted practices, or cannot be made with elementary operation.

Manifold cross-feed fuel system. A type of fuel system commonly used in large transport category aircraft. All fuel tanks feed into a common manifold, and the dump chutes and the single-point fueling valves are connected to the manifold. Fuel lines to each engine are taken from the manifold.

Manifold pressure. The absolute pressure of the air in the induction system of a reciprocating engine.

Manifold pressure gauge. A pressure gauge that measures the absolute pressure inside the induction system of a reciprocating engine. When the engine is not operating, this instrument shows the existing atmospheric pressure.

Master switch. A switch in an aircraft electrical system that can disconnect the battery from the bus and open the generator or alternator field circuit.

Matrix. The material used in composite construction to bond the fibers together and to transmit the forces into the fibers. Resins are the most widely used matrix materials.

Mean camber. A line that is drawn midway between the upper and lower camber of an airfoil section. The mean camber determines the aerodynamic characteristics of the airfoil.

MEK. Methyl-ethyl-ketone is an organic chemical solvent that is soluble in water and is used as a solvent for vinyl and nitrocellulose films. MEK is an efficient cleaner for preparing surfaces for priming or painting.

Mercerize. A treatment given to cotton thread to make it strong and lustrous. The thread is stretched while it is soaked in a solution of caustic soda.

MFD. Multi-function display.

MHz (megahertz). 1,000,000 cycles per second.

Microballoons. Tiny, hollow spheres of glass or phenolic material used to add body to a resin.

Microbial contaminants. The scum that forms inside the fuel tanks of turbine-engine-powered aircraft that is caused by micro-organisms. These micro-organisms live in water that condenses from fuel, and they feed on the fuel. The scum they form clogs fuel filters, lines, and fuel controls and holds water in contact with the aluminum alloy structure, causing corrosion.

Micro-Mesh. A patented graduated series of cloth-backed cushioned seats that contain abrasive crystals. Micro-Mesh is used for polishing and restoring transparency to acrylic plastic windows and windshields.

Micron ("micro meter"). A unit of linear measurement equal to one millionth of a meter, one thousandth of a millimeter, or 0.000039 inch. A micron is also called a micrometer.

Micronic filter. The registered trade name of a type of fluid filter whose filtering element is a specially treated cellulose paper formed into vertical convolutions, or wrinkles. Micronic filters prevent the passage of solids larger than about 10 microns, and are normally replaced with new filters rather than cleaned.

Micro-organism. An organism, normally bacteria or fungus, or microscopic size.

Microswitch. The registered trade name for a precision switch that uses a short throw of the control plunger to actuate the contacts. Microswitches are used primarily as limit switches to control electrical units automatically.

MIG welding. Metal inert gas welding is a form of electric arc welding in which the electrode is an expendable wire. MIG welding is now called GMA (gas metal arc) welding.

Mil. One thousandth of an inch (0.001 inch). Paint film thickness is usually measured in mils.

Mildew. A gray or white fungus growth that forms on organic materials. Mildew forms on cotton and linen aircraft fabric and destroys its strength.

Millivoltmeter. An electrical instrument that measures voltage in units of millivolts (thousandths of a volt).

Mist coat. A very light coat of zinc chromate primer. It is so thin that the metal is still visible, but the primer makes pencil marks easy to see.

Moisture separator. A component in a high-pressure pneumatic system that removes most of the water vapor from the compressed air. When the compressed air is used, its pressure drops, and this pressure drop causes a drop in temperature. If any moisture were allowed to remain in the air, it would freeze and block the system.

Mold line. A line used in the development of a flat pattern for a formed piece of sheet metal. The mold line is an extension of the flat side of a part beyond the radius. The mold line dimension of a part is the dimension made to the intersection of mold lines and is the dimension the part would have if its corners had no radius.

Mold point. The intersection of two mold lines of a part. Mold line dimensions are made between mold points.

Moment. A force that causes or tries to cause an object to rotate. The value of a moment is the product of the weight of an object (or the force), multiplied by the distance between the center of gravity of the object (or the point of application of the force) and the fulcrum about which the object rotates.

Monel. An alloy of nickel, copper, and aluminum or silicon.

Monocoque. A single-shell type of aircraft structure in which all of the flight loads are carried in the outside skin of the structure.

MSDS. Material Safety Data Sheets. MSDS are required by the Federal Government to be available in workplaces to inform workers of the dangers that may exist from contact with certain materials.

MSL. Mean sea level. When the letters MSL are used with an altitude, it means that the altitude is measured from mean, or average, sea level.

MTBF. Mean time between failures.

Multimeter. An electrical test instrument that consists of a single current-measuring meter and all of the needed components to allow the meter to be used to measure voltage, resistance, and current. Multimeters are available with either analog-or digital-type displays.

Multiple-disc **brakes.** Aircraft brakes in which one set of discs is keyed to the axle and remains stationary. Between each stationary disc there is a rotating disc that is keyed to the inside of the wheel. When the brakes are applied, the stationary discs are forced together, clamping the rotating discs between them. The friction between the discs slows the aircraft.

N

Nailing strip. A method of applying pressure to the glue in a scarf joint repair in a plywood skin. A strip of thin plywood is nailed over the glued scarf joint with the nails extending into a supporting structure beneath the skin. The strip is installed over vinyl sheeting to prevent it sticking to the skin. When the glue is thoroughly dry, the nailing strip is broken away and the nails removed.

Nap of the fabric. The ends of the fibers in a fabric. The first coat of dope on cotton or linen fabric raises the nap, and the fiber ends stick up. These ends must be carefully removed by sanding to get a smooth finish.

Naphtha. A volatile and flammable hydrocarbon liquid used chiefly as a solvent or as a cleaning fluid.

NDB. Non-directional beacons.

Negative pressure relief valve (pressurization component). A valve that opens anytime the outside air pressure is greater than the cabin pressure. It prevents the cabin altitude from ever becoming greater than the aircraft flight altitude.

Neutral axis (neutral plane). A line through a piece of material that is bent. The material in the outside of the bend is stretched and that on the inside of the bend is shrunk. The material along the neutral plane is neither shrunk nor stretched.

Neutral flame. An oxyacetylene flame produced when the ratio of oxygen and acetylene is chemically correct and there is no excess of oxygen or carbon. A neutral flame has a rounded inner cone and no feather around it.

Noise (electrical). An unwanted electrical signal within a piece of electronic equipment.

Nomex. A patented nylon material used to make the honeycomb core for certain types of sandwich materials.

Nonenergizing brake. A brake that does not use the momentum of the aircraft to increase the friction.

Nonvolatile memory. Memory in a computer that is not lost when power to the computer is lost.

Normal heptane. A hydrocarbon, C_7H_{16}, with a very low critical pressure and temperature. Normal heptane is used as the low reference in measuring the anti-detonation characteristics of a fuel.

Normal shock wave. A shock wave that forms ahead of a blunt object moving through the air at the speed of sound. The shock wave is normal (perpendicular) to the air approaching the object. Air passing through a normal shock wave is slowed to a subsonic speed and its static pressure is increased.

Normalizing. A process of strain-relieving steel that has been welded and left in a strained condition. The steel is heated to a specified temperature, usually red hot, and allowed to cool in still air to room temperature.

Nose-gear centering cam. A cam in the nose-gear shock strut that causes the piston to center when the strut fully extends. When the aircraft takes off and the strut extends, the wheel is straightened in its fore-and-aft position so it can be retracted into the wheel well.

NPN transistor. A bipolar transistor made of a thin base of P-type silicon or geranium sandwiched between a collector and an emitter, both of which are made of N-type material.

Null position. The position of an ADF loop antenna when the signal being received is canceled in the two sides of the loop and the signal strength is the weakest.

O

Oblique shock wave. A shock wave that forms on a sharp-pointed object moving through air at a speed greater than the speed of sound. Air passing through an oblique shock wave is slowed down, but not to a subsonic speed, and its static pressure is increased.

Oleo shock absorber. A shock absorber used on aircraft landing gear. The initial landing impact is absorbed by oil transferring from one compartment in the shock strut into another compartment through a metering orifice. The shocks of taxiing are taken up by a cushion of compressed air.

Octane rating. A rating of the anti-detonation characteristics of a reciprocating engine fuel. It is based on the performance of the fuel in a special test engine. When a fuel is given a dual rating such as 80/87, the first number is its anti-detonating rating with a lean fuel-air mixture, and the higher number is its rating with a rich mixture.

Open angle. An angle in which sheet metal is bent less than 90°.

Open assembly time. The period of time between the application of the glue and the assembly of the joint components.

Open-hydraulic system. A fluid power system in which the selector valves are arranged in series with each other. Fluid flows from the pump through the center of the selector valves, back into the reservoir when no unit is being actuated.

Open-center selector valve. A type of selector valve that functions as an unloading valve as well as a selector valve. Open-center selector valves are installed in series, and when no unit is actuated, fluid from the pump flows through the centers of all the valves and returns to the reservoir. When a unit is selected for actuation, the center of the selector valve is shut off and the fluid from the pump goes through the selector valve into one side of the actuator. Fluid from the other side of the actuator returns to the valve and goes back to the reservoir through the other selector valves. When the actuation is completed, the selector valve is placed in its neutral position. Its center opens, and fluid from the pump flows straight through the valve.

Open wiring. An electrical wiring installation in which the wires are tied together in bundles and clamped to the aircraft structure rather than being enclosed in conduit.

Orifice check valve. A component in a hydraulic or pneumatic system that allows unrestricted flow in one direction, and restricted flow in the opposite direction.

O-ring. A widely used type of seal made in the form of a rubber ring with a round cross section. An O-ring seals in both directions, and it can be used as a packing or a gasket.

Ornithopter. A heavier-than-air flying machine that produces lift by flapping its wings. No practical ornithopter has been built.

Oscilloscope. An electrical instrument that displays on the face of a cathode-ray tube the waveform of the electrical signal it is measuring.

Outflow valve (pressurization component). A valve in the cabin of a pressurized aircraft that controls the cabin pressure by opening to relieve all pressure above that for which the cabin pressure control is set.

Overvoltage protector. A component in an aircraft electrical system that opens the alternator field circuit any time the alternator output voltage is too high.

Oxidizing flame. An oxyacetylene flame in which there is an excess of oxygen. The inner cone is pointed and often a hissing sound is heard.

Ozone. An unstable form of oxygen produced when an electric spark passes through the air. Ozone is harmful to

rubber products.

P

Packing. A seal between two parts where there is relative motion.

Paint. A covering applied to an object or structure to protect it and improve its appearance. Paint consists of a pigment suspended in a vehicle such as oil or water. When the vehicle dries by evaporation or curing, the pigment is left as a film on the surface.

Parabolic reflector. A reflector whose surface is made in the form of a parabola.

Parallel circuit. A method of connecting electrical components so that each component is in a path between the terminals of the source of electrical energy.

Paralleling circuit. A circuit in a multi-engine aircraft electrical system that controls a flow of control current which is used to keep the generators or alternators sharing the electrical load equally. The relay opens automatically to shut off the flow of paralleling current any time the output of either alternator or generator drops to zero.

Paralleling relay. A relay in multi-engine aircraft electrical system that controls a flow of control current which is used to keep the generators or alternators sharing the electrical load equally. The relay opens automatically to shut off the flow of paralleling current any time the output of either alternator or generator drops to zero.

Parasite drag. A form of aerodynamic drag caused by friction between the air and the surface over which it is flowing.

Parent metal. The metal being welded. This term is used to distinguish between the metal being welded and the welding rod.

Partial pressure. The percentage of the total pressure of a mixture of gases produced by each of the individual gases in the mixture.

Parting film. A layer of thin plastic material placed between a composite lay-up and the heating blanket. It prevents the blanket from sticking to the fabric.

Pascal's Law. A basic law of fluid power which states that the pressure in an enclosed container is transmitted equally and undiminished to all points of the container, and the force acts at right angles to the enclosing walls.

Performance number. The anti-detonation rating of a fuel that has a higher critical pressure and temperature than iso-octane (a rating of 100). Iso-octane that has been treated with varying amounts of tetraethyl lead is used as the reference fuel.

Petrolatum-zinc dust compound. A special abrasive compound used inside an aluminum wire terminal being swaged onto a piece of aluminum electrical wire. When the terminal is compressed, the zinc dust abrades the oxides from the wire, and the petrolatum prevents oxygen reaching the wire so no more oxides can form.

Petroleum fractions. The various components of a hydrocarbon fuel that are separated by boiling them off at different temperatures in the process of fractional distillation.

Phased array antenna. A complex antenna which consists of a number of elements. A beam of energy is formed by the superimposition of the signals radiating from the elements. The direction of the beam can be changed by varying the relative phase of the signals applied to each of the elements.

Phenolic plastic. A plastic material made of a thermosetting phenol-formaldehyde resin, reinforced with cloth or paper. Phenolic plastic materials are used for electrical insulators and for chemical-resistant table tops.

Pilot hole. A small hole punched or drilled in a piece of sheet metal to locate a rivet hole.

Pin knot cluster. A group of knots, all having a diameter of less than approximately 1/16 inch.

Pinked-edge tape. Cloth tape whose edges have small V-shaped notches cut along their length. The pinked edges prevent the tape from raveling.

Pinking shears. Shears used to cut aircraft fabric with a series of small notches along the cut edge.

Pinion. A small gear that meshes with a larger gear, a sector of a gear, or a toothed rack.

Piston. A sliding plug in an actuating cylinder used to convert pressure into force and then into work.

Pitch (aircraft maneuver). Rotation of an aircraft about its lateral axis.

Pitch (rivet). The distance between the centers of adjacent rivets installed in the small row.

Pitch pocket (wood defect). Pockets of pitch that appear in

the growth rings of a piece of wood.

Pitot pressure. Ram air pressure used to measure airspeed. The pitot tube faces directly into the air flowing around the aircraft. It stops the air and measures its pressure.

Plain-weave fabric. Fabric in which each warp thread passes over one fill thread and under the next. Plain-weave fabric typically has the same strength in both warp and fill directions.

Plan position indicator (PPI). A type of radar scope that shows both the direction and distance of the target from the radar antenna. Some radar antenna rotate and their PPI scopes are circular. Other antenna oscillate and their PPI scopes are fan shaped.

Planer. A woodworking power tool used to smooth the surfaces of a piece of wood.

Plasticizer. A constituent in dope or lacquer that gives its film flexibility and resilience.

Plastic media blasting (PMB). A method of removing paint from an aircraft surface by dry-blasting it with tiny plastic beads.

Plastics. The generic name for any of the organic materials produced by polymerization. Plastics can be shaped by molding or drawing.

Plenum. An enclosed chamber in which air can be held at a pressure higher than that of the surrounding air.

Ply rating. The rating of an aircraft tire that indicates its relative strength. The ply rating does not indicate the actual number of plies of fabric in the tire; it indicates the number of piles of cotton fabric needed to produce the same strength as the actual piles.

Plywood. A wood product made by gluing several pieces of thin wood veneer together. The grain of the wood in each layer runs at 90° or 45° to the grain of the layer next to it.

Pneumatics. The system of fluid power which transmits force by the use of a compressible fluid.

PNP transistor. A bipolar transistor made of a thin base of N-type silicon or germanium sandwiched between a collector and an emitter, both of which are made of P-type material.

Polyester fibers. A synthetic fiber made by the polymerization process in which tiny molecules are united to form a long chain of molecules. Polyester fibers are woven into fabrics that are known by their trade names of Dacron, Fortrel, and Kodel. Polyester film and sheet are known as Mylar and Celenar.

Polyester resin. A thermosetting resin used as a matrix for much of the fiberglass used in composite construction.

Polyurethane enamel. A hard, chemically resistant finish used on aircraft. Polyurethane enamel is resistant to damage from all types of hydraulic fluid.

Polyvinyl chloride. A thermoplastic resin used in the manufacture of transparent tubing for electrical insulation and fluid lines which are subject to low pressures.

Position error. The error in pitot-static instruments caused by the static ports not sensing true static air pressure. Position error changes with airspeed and is usually greatest at low airspeeds.

Potential energy. Energy possessed in an object because of its position, chemical composition, shape, or configuration.

Potentiometer. A variable resistor having connections to both ends of the resistance element and to the wiper that moves across the resistance.

Pot life. The length of time a resin will remain workable after the catalyst has been added. If a catalyzed material is not used within its usable pot life, it must be discarded and a new batch mixed up.

Power. The time rate of doing work. Power is force multiplied by distance (work), divided by time.

Power brakes. Aircraft brakes that use the main hydraulic system to supply fluid for the brake actuation. Aircraft that require a large amount of fluid for their brake actuation normally use power brakes, and the volume of fluid sent to the brakes is increased by the use of deboosters.

Power control valve. A hand-operated hydraulic pump unloading valve. When the valve is open, fluid flows from the pump to the reservoir with little opposition. To actuate a unit, turn the selector valve, and manually close the power control valve. Pressurized fluid flows to the unit, and when it is completely actuated, the power control valve automatically opens.

Precession. The characteristic of a gyroscope that causes a force to be felt, not at the point of application, but at a point 90° in the direction of rotation from that point.

Preflight inspection. A required inspection to determine the condition of the aircraft for the flight to be conducted. It is conducted by the pilot-in-command.

Precipitation heat treatment. A method of increasing the strength of heat-treated aluminum alloy. After the aluminum alloy has been solution-heat-treated by heating and quenching, it is returned to the oven and heated to a temperature lower than that used for the initial heat treatment. It is held at this temperature for a specified period of time, and then removed from the oven and allowed to cool slowly.

Prepreg (preimpregnated fabric). A type of composite material in which the reinforcing fibers are encapsulated in an uncured resin. Prepreg materials must be kept refrigerated to prevent them from curing before they are used.

Press-to-test light fixture. An indicator light fixture whose lens can be pressed in to complete a circuit that tests the filament of the light bulb.

Pressure. Force per unit area. Hydraulic and pneumatic pressure are normally given in units of pounds per square inch (psi).

Pressure altitude. The altitude in standard air at which the pressure is the same as that of the existing air. Pressure altitude is read on an altimeter when the barometric scale is set to the standard sea level pressure of 29.92 inches of mercury.

Pressure-demand oxygen system. A type of oxygen system used by aircraft that fly at very high altitude. This system functions as a diluter-demand system until, at about 40,000 feet, the output to the mask is pressurized enough to force the needed oxygen into the lungs, rather than depending on the low pressure produced when the wearer of the mask inhales to pull in the oxygen. (See diluter-demand oxygen system.)

Pressure fueling. The method of fueling used by almost all transport aircraft. The fuel is put into the aircraft through a single underwing fueling port. The fuel tanks are filled to the desired quantity and in the sequence selected by the person conducting the fueling operation. Pressure fueling saves servicing time by using a single point to fuel the entire aircraft, and it reduces the chances for fuel contamination.

Pressure manifold (hydraulic system component). The portion of a fluid power system from which the selector valves receive their pressurized fluid.

Pressure plate (brake component). A strong, heavy plate used in a multiple-disc brake. The pressure plate receives the force from the brake cylinders and transmits this force to the discs.

Pressure reducing valve (oxygen system component). A valve used in an oxygen system to change high cylinder pressure to low system pressure.

Pressure relief valve (oxygen system component). A valve in an oxygen system that relieves the pressure if the pressure reducing valve should fail.

Pressure vessel. The strengthened portion of an aircraft structure that is sealed and pressurized in flight.

Primer (finishing system component). A component in a finishing system that provides a good bond between the surface and the material used for the topcoats.

Profile drag. Aerodynamic drag produced by skin friction. Profile drag is a form of parasite drag.

Progressive inspection. An inspection that may be used in place of an annual or 100-hour inspection. It has the same scope as an annual inspection, but it may be performed in increments so the aircraft will not have to be out of service for a lengthy period of time.

Pump control valve. A control valve in a hydraulic system that allows the pilot to manually direct the output of the hydraulic pump back to the reservoir when no unit is being actuated.

Pureclad. A registered trade name for clad aluminum alloy.

Purge (air conditioning system operation). To remove all of the moisture and air from a cooling system by flushing the system with a dry gaseous refrigerant.

Pusher powerplant. A powerplant whose propeller is mounted at the rear of the airplane and pushes, rather than pulls, the airplane through the air.

PVC (Polyvinylchloride). A thermoplastic resin used to make transparent tubing for insulating electrical wires.

Q

Quartersawed wood. Wood sawed from a tree in such a way that the annual rings cross the plank at an angle greater than 45°.

Quick-disconnect fitting. A hydraulic line fitting that seals the line when the fitting is disconnected. Quick-disconnect fittings are used on the lines connected to the engine-driven hydraulic pump. They allow the pump to be disconnected and an auxiliary hydraulic power system connected to perform checks requiring hydraulic power while the aircraft is in the hangar.

R

Rack-and-pinion actuator. A form of rotary actuator where the fluid acts on a piston on which a rack of gear teeth is cut. As the piston moves, it rotates a pinion gear which is mated with the teeth cut in the rack.

Radial. A directional line radiating outward from a radio facility, usually a VOR. When an aircraft is flying outbound on the 330º from the station.

Radius dimpling. A process of preparing a hole in sheet metal for flush riveting. A cone-shaped male die forces the edges of the rivet hole into the depression in a female die. Radius dimpling forms a round-edged depression into which the rivet head fits.

Range markings. Colored marks on an instrument dial that identify certain ranges of operation as specified in the aircraft maintenance or flight manual and listed in the appropriate aircraft Type Certificate Data Sheets or Aircraft Specifications. Color coding directs attention to approaching operating difficulties. Airspeed indicators and most pressure and temperature indicators are marked to show the various ranges of operation. These ranges and colors are the most generally used: Red radial line, do not exceed. Green arc, normal operating range. Yellow arc, caution range. Blue radial line, used on airspeed indicators to show best single-engine rate of climb speed. White arc, used on airspeed indicators to show flap operating range.

RDF. Radio direction finding.

Rebreather oxygen mask. A type of oxygen mask used with a continuous flow oxygen system. Oxygen continuously flows into the bottom of the loose-fitting rebreather bag on the mask. The wearer of the mask exhales into the top of the bag. The first air exhaled contains some oxygen, and this air goes into the bag first. The last air to leave the lungs contains little oxygen, and it is forced out of the bag as the bag is filled with fresh oxygen. Each time the wearer of the mask inhales, the air first exhaled, along with fresh oxygen, is taken into the lungs.

Receiver-dryer. The component in a vapor-cycle cooling system that serves as a reservoir for the liquid refrigerant. The receiver-dryer contains a desiccant that absorbs any moisture that may be in the system.

Rectangle. A plane surface with four sides whose opposite sides are parallel and whose angles are all right angles.

Rectification (arc welding condition). A condition in AC-electric arc welding in which oxides on the surface of the metal act as a rectifier and prevent electrons flowing from the metal to the electrode during the half cycle when the electrode is positive.

Reducing flame. See carburizing flame.

Reed valve. A thin, leaf-type valve mounted in the valve plate of an air conditioning compressor to control the flow of refrigerant gases into and out of the compressor cylinders.

Reinforcing tape. A narrow strip of woven fabric material placed over the fabric as it is being attached to the aircraft structure with rib lacing cord. This tape carries a large amount of the load and prevents the fabric tearing at the stitches.

Rejuvenator. A finishing material used to restore resilience to an old dope film. Rejuvenator contains strong solvents to open the dried-out film and plasticizers to restore resilience to the old dope.

Relative wind. The direction the wind strikes an airfoil.

Relay. An electrical component which uses a small amount of current flowing through a coil to produce a magnetic pull to close a set of contacts through which a large amount of current can flow. The core in a relay coil is fixed.

Relief hole. A hole drilled at the point at which two bend lines meet in a piece of sheet metal. This hole spreads the stresses caused by the bends and prevents the metal cracking.

Relief valve. A pressure-control valve that relieves any pressure over the amount for which it is set. They are damage-preventing units used in both hydraulic and pneumatic systems. In an aircraft hydraulic system, pressure relief valves prevent damaging high pressures that could be caused by a malfunctioning pressure regulator, or by thermal expansion of fluid trapped in portions of the system.

Repair. A maintenance procedure in which a damaged component is restored to its original condition, or at least to a condition that allows it to fulfill its design function.

Restrictor. A fluid power system component that controls the rate of actuator movement by restricting the flow of fluid into or out of the actuator.

Retard breaker points. A set of breaker points in certain aircraft magnetos that are used to provide a late (retarded) spark for starting the engine.

Retarder (finishing system component). Dope thinner that

contains certain additives that slow its rate of evaporation enough to prevent dope blushing.

Retread. The replacement of the tread rubber on an aircraft tire.

Retreating blade. The blade on a helicopter rotor whose tip is moving in the direction opposite to that in which the helicopter is moving.

Retreating blade stall. The stall of a helicopter rotor disc that occurs near the tip of the retreating blade. A retreating blade stall occurs when the flight airspeed is high and the retreating blade airspeed is low. This results in a high angle of attack, causing the stall.

Return manifold. The portion of a fluid power system through which the fluid is returned to the reservoir.

Reverse polarity welding. DC-electric arc welding in which the electrode is positive with respect to the work.

Rib thread. A series of circumferential grooves cut into the tread of a tire. This tread pattern provides superior traction and directional stability on hard-surfaced runways.

Ribbon direction. The direction in a piece of honeycomb material that is parallel to the length of the strips of material that make up the core.

Rigid conduit. Aluminum alloy tubing used to house electrical wires in areas where they are subject to mechanical damage.

Rigidity in space. The characteristic of a gyroscope that prevents its axis of rotation tilting as the earth rotates. This characteristic is used for attitude gyro instruments.

Rime ice. A rough ice that forms on aircraft flying through visible moisture, such as a cloud, when the temperature is below freezing. Rime ice disturbs the smooth airflow as well as adding weight.

Rivet cutters. Special cutting pliers that resemble diagonal cutters except that the jaws are ground in such a way that they cut the rivet shank, or stem, off square.

Rivet set. A tool used to drive aircraft solid rivets. It is a piece of hardened steel with a recess the shape of the rivet head in one end. The other end fits into the rivet gun.

RMI. Radio magnetic indicator.

Rocking shaft. A shaft used in the mechanism of a pressure measuring instrument to change the direction of movement by 90º and to amplify the amount of movement.

Roll (aircraft maneuver). Rotation of an aircraft about its longitudinal axis.

Roots-type air compressor. A positive-displacement air pump that uses two intermeshing figure-8-shaped rotors to move the air.

Rosette weld. A method of securing one metal tube inside another by welding. Small holes are drilled in the outer tube and the inner tube is welded to it around the circumference of the holes.

Rotary actuator. A fluid power actuator whose output is rotational. A hydraulic motor is a rotary actuator.

Roving. A lightly twisted roll or strand of fibers.

RPM. Revolutions per minute.

Ruddervators. The two movable surfaces on a V-tail empennage. When these two surfaces are moved together with the in-and-out movement of the control yoke, they act as elevators, and when they are moved differentially with the rudder pedals, they act as the rudder.

S

Saddle gusset. A piece of plywood glued to an aircraft structural member. The saddle gusset has a cutout to hold a backing block or strip tightly against the skin to allow a nailing strip to be used to apply pressure to a glued joint in the skin.

Sailplane. A high-performance glider.

Sandwich material. A type of composite structural material in which a core material is bonded between face sheets of metal or resin-impregnated fabric.

Satin-weave fabric. Fabric in which the warp threads pass under one fill thread and over several others. Satin-weave fabrics are used when the lay-up must be made over complex shapes.

Scarf joint. A joint in a wood structure in which the ends to be joined are cut in a long taper, normally about 12:1, and fastened together by gluing. A glued scarf joint makes a strong splice because the joint is made along the side of the wood fibers rather than along their ends.

Schematic diagram. A diagram of an electrical system in which the system components are represented by symbols

rather than drawings or pictures of the actual devices.

Schrader valve. A type of service valve used in an air conditioning system. This is a spring-loaded valve much like the valve used to put air into a tire.

Scissors. A name commonly used for torque links. See torque links.

Scrim cloth. Scrim cloth can be used in repair applications or for reinforcement of other types of materials including fiberglass, concrete and some plastics. When fully cured, the scrim cloth will add reinforcement and mimic the expansion and contraction of the surrounding substrate.

Scupper. A recess around the filler neck of an aircraft fuel tank. Any fuel spilled when the tank is being serviced collects in the scupper and drains to the ground through a drain line rather than flowing into the aircraft structure.

Sea level engine. A reciprocating engine whose rated takeoff power can be produced only at sea level.

Sector gear. A part of a gear wheel containing the hub and a portion of the rim with teeth.

Series circuit. A method of connecting electrical components in such a way that all the current flows through each of the components. There is only one path for current to flow.

Series-parallel circuit. An electrical circuit in which some of the components are connected in parallel and others are connected in series.

Selcal system. Selective calling system. Each aircraft operated by an airline is assigned a particular four-tone audio combination for identification purposes. A ground station keys the signal whenever contact with that particular aircraft is desired. The signal is decoded by the airborne selcal decoder and the crew alerted by the selcal warning system.

Selsyn system. A DC synchro system used in remote indicating instruments. The rotor in the indicator is a permanent magnet and the stator is a tapped toroidal coil. The transmitter is a circular potentiometer with DC power fed into its wiper which is moved by the object being monitored. The transmitter is connected to the indicator in such a way that rotation of the transmitter shaft varies the current in the sections of the indicator toroidal coil. The magnet in the indicator on which the pointer is mounted locks with the magnetic field produced by the coils and follows the rotation of the transmitter shaft.

Segmented-rotor brake. A heavy-duty, multiple-disc brake used on large, high-speed aircraft. Stators that are surfaced with a material that retains its friction characteristics at high temperatures are keyed to the axle. Rotors which are keyed into the wheels mesh with the stators. The rotors are made in segments to allow for cooling and for their large amounts of expansion.

Selector valve. A flow control valve used in hydraulic systems that directs pressurized fluid into one side of an actuator, and at the same time directs return fluid from the other side of the actuator back to the reservoir. There are two basic types of selector valves: open-center valves and closed-center valves. The four-port closed-center valve is the most frequently used type. See closed-center selector valve and open-center selector valve.

Selvage edge. The woven edge of fabric used to prevent the material unraveling during normal handling. The selvage edge, which runs the length of the fabric parallel to the warp threads, is usually removed from materials used in composite construction.

Semiconductor diode. A two-element electrical component that allows current to pass through it in one direction, but blocks its passage in the opposite direction. A diode acts in an electrical system in the same way a check valve acts in a hydraulic system.

Semimonocoque structure. A form of aircraft stressed skin structure. Most of the strength of a semimonocoque structure is in the skin, but the skin is supported on a substructure of formers and stringers that give the skin its shape and increase its rigidity.

Sensible heat. Heat that is added to a liquid causing a change in its temperature but not its physical state.

Sensitivity. A measure of the signal strength needed to produce a distortion-free output in a radio receiver.

Sequence valve. A valve in a hydraulic system that requires a certain action to be completed before another action can begin. Sequence valves are used to assure that the hydraulically actuated wheel-well doors are completely open before pressure is directed to the landing gear to lower it.

Servo. An electrical or hydraulic actuator connected into a flight control system. A small force on the flight deck control is amplified by the servo and provides a large force to move the control surface.

Servo amplifier. An electronic amplifier in an autopilot

system that increases the signal from the autopilot enough that it can operate the servos that move the control surfaces.

Servo tab. A small movable tab built into the trailing edge of a primary control surface of an airplane. The flight deck controls move the tab in such a direction that it produces an aerodynamic force moving the surface on which it is mounted.

Setback. The distance the jaws of a brake must be set back from the mold line to form a bend. Setback for a 90° bend is equal to the inside radius of the bend plus the thickness of the metal being bent. For a bend other than 90°, a K-factor must be used. See also K-factor.

Shake (wood defect). Longitudinal cracks in a piece of wood, usually between two annual rings.

SHF. Super-high frequency.

Shear section. A necked-down section of the drive shaft of a constant-displacement engine-driven fluid pump. If the pump should seize, the shear section will break and prevent the pump from being destroyed or the engine from being damaged. Some pumps use a shear pin rather than a shear section.

Shear strength. The strength of a riveted joint in a sheet metal structure in which the rivets shear before the metal tears at the rivet holes.

Shelf life. The length of time a product is good when it remains in its original unopened container.

Shielded wire. Electrical wire enclosed in a braided metal jacket. Electromagnetic energy radiated from the wire is trapped by the braid and is carried to ground.

Shimmy. Abnormal, and often violent, vibration of the nose wheel of an airplane. Shimmying is usually caused by looseness of the nose wheel support mechanism or an unbalanced wheel.

Shimmy damper. A small hydraulic shock absorber installed between the nose wheel fork and the nose wheel cylinder attached to the aircraft structure.

Shock mounts. Resilient mounting pads used to protect electronic equipment by absorbing low-frequency, high amplitude vibrations.

Shock wave. A pressure wave formed in the air by a flight vehicle moving at a speed greater than the speed of sound. As the vehicle passes through the air, it produces sound waves that spread out in all directions. But since the vehicle is flying faster than these waves are moving, they build up and form a pressure wave at the front and rear of the vehicle. As the air passes through a shock wave it slows down, its static pressure increases, and its total energy decreases.

Shop head. The head of a rivet which is formed when the shank is upset.

Show-type finish. The type of finish put on fabric-covered aircraft intended for show. This finish is usually made up of many coats of dope, with much sanding and rubbing of the surface between coats.

Shunt winding. Field coils in an electric motor or generator that are connected in parallel with the armature.

Shuttle valve. An automatic selector valve mounted on critical components such as landing gear actuation cylinders and brake cylinders. For normal operation, system fluid flows into the actuator through the shuttle valve, but if normal system pressure is lost, emergency system pressure forces the shuttle over and emergency fluid flows into the actuator.

Sidestick controller. A flight deck flight control used on some of the fly-by-wire equipped airplanes. The stick is mounted rigidly on the side console of the flight deck, and pressures exerted on the stick by the pilot produce electrical signals that are sent to the computer that flies the airplane.

Sight glass (air conditioning system component). A small window in the high side of a vapor-cycle cooling system. Liquid refrigerant flows past the sight glass, and if the charge of refrigerant is low, bubbles will be seen. A fully charged system has no bubbles in the refrigerant.

Sight line. A line drawn on a sheet metal layout that is one bend radius from the bend-tangent line. The sight line is lined up directly below the nose of the radius bar in a cornice brake. When the metal is clamped in this position, the bend tangent line is in the correct position for the start of the bend.

Silicon controlled rectifier (SCR). A semiconductor electron control device. An SCR blocks current flow in both directions until a pulse of positive voltage is applied to its gate. It then conducts in its forward direction, while continuing to block current in its reverse direction.

Silicone rubber. An elastomeric material made from silicone elastomers. Silicone rubber is compatible with fluids that attack other natural or synthetic rubbers.

Single-acting actuator. A linear hydraulic or pneumatic actuator that uses fluid power for movement in one direction

and a spring force for its return.

Single-action hand pump. A hand-operated fluid pump that moves fluid only during one stroke of the pump handle. One stroke pulls the fluid into the pump and the other forces the fluid out.

Single-disc **brakes.** Aircraft brakes in which a single steel disc rotates with the wheel between two brake-lining blocks. When the brake is applied, the disc is clamped tightly between the lining blocks, and the friction slows the aircraft.

Single-servo brakes. Brakes that uses the momentum of the aircraft rolling forward to help apply the brakes by wedging the brake shoe against the brake drum.

Sintered metal. A porous material made by fusing powdered metal under heat and pressure.

Skydrol hydraulic fluid. The registered trade name for a synthetic, nonflammable, phosphate ester-base hydraulic fluid used in modern high-temperature hydraulic systems.

Slat. A secondary control on an aircraft that allows it to fly at a high angle of attack without stalling. A slat is a section of leading edge of wing mounted on curved tracks that move into and out of the wing on rollers.

Slip roll former. A shop tool used to form large radius curves on sheet metal.

Slippage mark. A paint mark extending across the edge of an aircraft wheel onto a tube-type tire. When this mark is broken, it indicates the tire has slipped on the wheel, and there is a good reason to believe the tube has been damaged.

Slipstream area. For the purpose of rib stitch spacing, the slipstream area is considered to be the diameter of the propeller plus one wing rib on each side.

Slot (aerodynamic device). A fixed, nozzle-like opening near the leading edge of an airplane wing ahead of the aileron. A slot acts as a duct to force high-energy air down on the upper surface of the wing when the airplane is flying at a high angle of attack. The slot, which is located ahead of the aileron, causes the inboard portion of the wing to stall first, allowing the aileron to remain effective throughout the stall.

Slow-blow fuse. An electrical fuse that allows a large amount of current to flow for a short length of time but melts to open the circuit if more than its rated current flows for a longer period.

Smoke detector. A device that warns the flight crew of the presence of smoke in cargo and/or baggage compartments. Some smoke detectors are of the visual type, others are photoelectric or ionization devices.

Snubber. A device in a hydraulic or pneumatic component that absorbs shock and/or vibration. A snubber is installed in the line to a hydraulic pressure gauge to prevent the pointer fluctuating.

Softwood. Wood from a tree that bears cones and has needles rather than leaves.

Soldering. A method of thermally joining metal parts with a molten nonferrous alloy that melts at a temperature below 800 °F. The molten alloy is pulled up between close-fitting parts by capillary action. When the alloy cools and hardens, it forms a strong, leak-proof connection.

Solenoid. An electrical component using a small amount of current flowing through a coil to produce a magnetic force that pulls an iron core into the center of the coil. The core may be attached to a set of heavy-duty electrical contacts, or it may be used to move a valve or other mechanical device.

Solidity (helicopter rotor characteristic). The solidity of a helicopter rotor system is the ratio of the total blade area to the disc area.

Solution heat treatment. A type of heat treatment in which the metal is heated in a furnace until it has a uniform temperature throughout. It is then removed and quenched in cold water. When the metal is hot, the alloying elements enter into a solid solution with the base metal to become part of its basic structure. When the metal is quenched, these elements are locked into place.

Sonic venturi. A sonic venturi in a line between a turbine engine or turbocharger and a pressurization system. When the air flowing through the sonic venturi reaches the speed of sound, a shock wave forms across the throat of the sonic venturi and limits the flow. A sonic venturi is also called a flow limiter.

Specific heat. The number of BTUs of heat energy needed to change the temperature of one pound of a substance 1 °F.

Speed brakes. A secondary control of an airplane that produces drag without causing a change in the pitch attitude of the airplane. Speed brakes allow an airplane to make a steep descent without building up excessive forward airspeed.

Spike knot. A knot that runs through the depth of a beam perpendicular to the annual rings. Spike knots appear most frequently in quartersawed wood.

Spin. A flight maneuver in which an airplane descends in a corkscrew fashion. One wing is stalled and the other is producing lift.

Spirit level. A curved glass tube partially filled with a liquid, but with a bubble in it. When the device in which the tube is mounted is level, the bubble will be in the center of the tube.

Splayed patch (wood structure repair). A type of patch made in an aircraft plywood structure in which the edges of the patch are tapered for approximately five times the thickness of the plywood. A splayed patch is not recommended for use on plywood less than 1/10 inch thick.

Split bus. A type of electrical bus that allows all of the voltage-sensitive avionic equipment to be isolated from the rest of the aircraft electrical system when the engine is being started or when the ground-power unit is connected.

Split-rocker switch. An electrical switch whose operating rocker is split so one half of the switch can be opened without affecting the other half. Split-rocker switches are used as aircraft master switches. The battery can be turned on without turning on the alternator, but the alternator cannot be turned on without also turning on the battery. The alternator can be turned off without turning off the battery, but the battery cannot be turned off without also turning off the alternator.

Split (wood defect). A longitudinal crack in a piece of wood caused by externally induced stress.

Spoilers. Flight controls that are raised up from the upper surface of a wing to destroy, or spoil, lift. Flight spoilers are used in conjunction with the ailerons to decrease lift and increase drag on the descending wing. Ground spoilers are used to produce a great amount of drag to slow the airplane on its landing roll.

Spongy brakes. Hydraulic brakes whose pedal has a spongy feel because of air trapped in the fluid.

Spontaneous combustion. Self-ignition of a material caused by heat produced in the material as it combines with oxygen from the air.

Springwood. The portion of an annual ring in a piece of wood formed principally during the first part of the growing season, the spring of the year. Springwood is softer, more porous, and lighter than the summerwood.

Square. A four-sided plane figure whose sides are all the same length, whose opposite sides are parallel, and whose angles are all right angles.

Squat switch. An electrical switch actuated by the landing gear scissors on the oleo strut. When no weight is on the landing gear, the oleo piston is extended and the switch is in one position, but when weight is on the gear, the oleo strut compresses and the switch changes its position. Squat switches are used in antiskid brake systems, landing gear safety circuits, and cabin pressurization systems.

Squib. An explosive device in the discharge valve of a high-rate-discharge container of fire-extinguishing agent. The squib drives a cutter into the seal in the container to discharge the agent.

SRM. Structural Repair Manual.

Stabilator. A flight control on the empennage of an airplane that acts as both a stabilizer and an elevator. The entire horizontal tail surface pivots and is moved as a unit.

Stability. The characteristic of an aircraft that causes it to return to its original flight condition after it has been disturbed.

Stabilons. Small wing-like horizontal surfaces mounted on the aft fuselage to improve longitudinal stability of airplanes that have an exceptionally wide center of gravity range.

Stagnation point. The point on the leading edge of a wing at which the airflow separates, with some flowing over the top of the wing and the rest below the wing.

Stall. A flight condition in which an angle of attack is reached at which the air ceases to flow smoothly over the upper surface of an airfoil. The air becomes turbulent and lift is lost.

Stall strip. A fixed device employed on the leading edge of fixed-wing aircraft to initiate flow separation at chosen locations on the wing during high-angle of attack flight, so as to improve the controllability of the aircraft when it enters stall.

Standpipe. A pipe sticking up in a tank or reservoir that allows part of the tank to be used as a reserve, or standby, source of fluid.

Starter-generator. A single-component starter and generator used on many of the smaller gas-turbine engines. It is used as a starter, and when the engine is running, its circuitry is shifted so that it acts as a generator.

Static. Still, not moving.

Static air pressure. Pressure of the ambient air surrounding the aircraft. Static pressure does not take into consideration any air movement.

Static dischargers. Devices connected to the trailing edges of control surfaces to discharge static electricity harmlessly into the air. They discharge the static charges before they can build up high enough to cause radio receiver interference.

Static stability. The characteristic of an aircraft that causes it to return to straight and level flight after it has been disturbed from that condition.

Stoddard solvent. A petroleum product, similar to naphtha, used as a solvent and a cleaning fluid.

STOL. Short takeoff and landing.

Stop drilling. A method of stopping the growth of a crack in a piece of metal or transparent plastic by drilling a small hole at the end of the crack. The stresses are spread out all around the circumference of the hole rather than concentrated at the end of the crack.

Straight polarity welding. DC-electric arc welding in which the electrode is negative with respect to the work.

Strain. A deformation or physical change in a material caused by a stress.

Stress. A force set up within an object that tries to prevent an outside force from changing its shape.

Stressed skin structure. A type of aircraft structure in which all or most of the stresses are carried in the outside skin. A stressed skin structure has a minimum of internal structure.

Stress riser. A location where the cross-sectional area of the part changes abruptly. Stresses concentrate at such a location and failure is likely. A scratch, gouge, or tool mark in the surface of a highly stressed part can change the area enough to concentrate the stresses and become a stress riser.

Stringer. A part of an aircraft structure used to give the fuselage its shape and, in some types of structure, to provide a small part of fuselage strength. Formers give the fuselage its cross-sectional shape and stringers fill in the shape between the formers.

Stroboscopic tachometer. A tachometer used to measure the speed of any rotating device without physical contact. A highly accurate variable-frequency oscillator triggers a high-intensity strobe light.

Sublimation. A process in which a solid material changes directly into a vapor without passing through the liquid stage.

Subsonic flight. Flight at an airspeed in which all air flowing over the aircraft is moving at a speed below the speed of sound.

Summerwood. The less porous, usually harder portion of an annual ring that forms in the latter part of the growing season, the summer of the year.

Sump. A low point in an aircraft fuel tank in which water and other contaminants can collect and be held until they can be drained out.

Supercooled water. Water in its liquid form at a temperature well below its natural freezing temperature. When supercooled water is disturbed, it immediately freezes.

Superheat. Heat energy that is added to a refrigerant after it changes from a liquid to a vapor.

Super heterodyne circuit. A sensitive radio receiver circuit in which a local oscillator produces a frequency that is a specific difference from the received signal frequency. The desired signal and the output from the oscillator are mixed, and they produce a single, constant intermediate frequency. This IF is amplified, demodulated, and detected to produce the audio frequency that is used to drive the speaker.

Supersonic flight. Flight at an airspeed in which all air flowing over the aircraft is moving at a speed greater than the speed of sound.

Supplemental Type Certificate (STC). An approval issued by the FAA for a modification to a type certificated airframe, engine, or component. More than one STC can be issued for the same basic alteration, but each holder must prove to the FAA that the alteration meets all the requirements of the original type certificate.

Surface tape. Strips of aircraft fabric that are doped over all seams and places where the fabric is stitched to the aircraft structure. Surface tape is also doped over the wing leading edges where abrasive wear occurs. The edges of surface tape are pink, or notched, to keep them from raveling before the dope is applied.

Surfactant. A surface active agent, or partially soluble contaminant, which is a by-product of fuel processing or of fuel additives. Surfactants adhere to other contaminants and cause them to drop out of the fuel and settle to the bottom of the fuel tank as sludge.

Surveyor's transit. An instrument consisting of a telescope mounted on a flat, graduated, circular plate on a tripod. The plate can be adjusted so it is level, and its graduations oriented to magnetic north. When an object is viewed through the telescope, its azimuth and elevation may be determined.

Swashplate. The component in a helicopter control system that consists basically of two bearing races with ball bearings between them. The lower, or nonrotating, race is tilted by the cyclic control, and the upper, or rotating, race has arms which connect to the control horns on the rotor blades. Movement of the cyclic pitch control is transmitted to the rotor blades through the swashplate. Movement of the collective pitch control raises or lowers the entire swashplate assembly to change the pitch of all the blades at the same time.

Synchro system. A remote instrument indicating system. A synchro transmitter is actuated by the device whose movement is to be measured, and it is connected electrically with wires to a synchro indicator whose pointer follows the movement of the shaft of the transmitter.

Symmetrical airfoil. An airfoil that has the same shape on both sides of its chord line, or center line.

Symmetry check. A check of an airframe to determine that the wings and tail are symmetrical about the longitudinal axis.

System-pressure regulator (hydraulic system component). A type of hydraulic system-pressure control valve. When the system pressure is low, as it is when some unit is actuated, the output of the constant-delivery pump is directed into the system. When the actuation is completed and the pressure builds up to a specified kick-out pressure, the pressure regulator shifts. A check valve seals the system off and the pressure is maintained by the accumulator. The pump is unloaded and its output is directed back into the reservoir with very little opposition. The pump output pressure drops, but the volume of flow remains the same. When the system pressure drops to the specified kick-in pressure, the regulator again shifts and directs fluid into the system. Spool-type and balanced-pressure-type system pressure regulators are completely automatic in their operation and require no attention on the part of the flight crew.

T

TACAN (Tactical Air Navigation). A radio navigation facility used by military aircraft for both direction and distance information. Civilian aircraft receive distance information from a TACAN on their DME.

Tack coat. A coat of finishing material sprayed on the surface and allowed to dry until the solvents evaporate. As soon as the solvents evaporate, a wet full-bodied coat of material is sprayed over it.

Tack rag. A clean, lintless rag, slightly damp with thinner. A tack rag is used to wipe a surface to prepare it to receive a coat of finishing material.

Tack weld. A method of holding parts together before they are permanently welded. The parts are assembled, and small spots of weld are placed at strategic locations to hold them in position.

Tacky. Slightly sticky to the touch.

Tailets. Small vertical surfaces mounted underside of the horizontal stabilizer of some airplanes to increase the directional stability.

Takeoff warning system. An aural warning system that provides audio warning signals when the thrust levers are advanced for takeoff if the stabilizer, flaps, or speed brakes are in an unsafe condition for takeoff.

Tang. A tapered shank sticking out from the blade of a knife or a file. The handle of a knife or file is mounted on the tang.

TCAS. Traffic Alert Collision Avoidance System.

Teflon. The registered trade name for a fluorocarbon resin used to make hydraulic and pneumatic seals, hoses, and backup rings.

Tempered glass. Glass that has been heat-treated to increase its strength. Tempered glass is used in bird-proof, heated windshields for high-speed aircraft.

Terminal strips. A group of threaded studs mounted in a strip of insulating plastic. Electrical wires with crimped-on terminals are placed over the studs and secured with nuts.

Terminal VOR. A low-powered VOR that is normally located on an airport.

Tetraethyl lead (TEL). A heavy, oily, poisonous liquid, $Pb(C_2H_5)^4$, that is mixed into aviation gasoline to increase its critical pressure and temperature.

Therapeutic mask adapter. A calibrated orifice in the mask adapter for a continuous-flow oxygen system that increases the flow of oxygen to a mask being used by a passenger who is known to have a heart or respiratory problem.

Thermal dimpling. See hot dimpling.

Thermal relief valve. A relief valve in a hydraulic system that relieves pressure that builds up in an isolated part of the system because of heat. Thermal relief valves are set at a higher pressure than the system pressure relief valve.

Thermistor. A special form of electrical resistor whose resistance varies with its temperature.

Thermistor material. A material with a negative temperature coefficient that causes its resistance to decrease as its temperature increases.

Thermocouple. A loop consisting of two kinds of wire, joined at the hot, or measuring, junction and at the cold junction in the instrument. The voltage difference between the two junctions is proportional to the temperature difference between the junctions. In order for the current to be meaningful, the resistance of the thermocouple is critical, and the leads are designed for a specific installation. Their length should not be altered. Thermocouples used to measure cylinder head temperature are usually made of iron and constantan, and thermocouples that measure exhaust gas temperature for turbine engines are made of chromel and alumel.

Thermocouple fire-detection system. A fire-detection system that works on the principle of the rate-of-temperature rise. Thermocouples are installed around the area to be protected, and one thermocouple is surrounded by thermal insulation that prevents its temperature changing rapidly. In the event of a fire, the temperature of all the thermocouples except the protected one will rise immediately and a fire warning will be initiated. In the case of a general overheat condition, the temperature of all the thermocouples will rise uniformly and there will be no fire warning.

Thermoplastic resin. A type of plastic material that becomes soft when heated and hardens when cooled.

Thermosetting resin. A type of plastic material that, when once hardened by heat, cannot be softened by being heated again.

Thermostatic expansion valve (TEV). The component in a vapor-cycle cooling system that meters the refrigerant into the evaporator. The amount of refrigerant metered by the TEV is determined by the temperature and pressure of the refrigerant as it leaves the evaporator coils. The TEV changes the refrigerant from a high-pressure liquid into a low-pressure liquid.

Thixotropic agents. Materials, such as microballoons, added to a resin to give it body and increase its workability.

TIG welding. Tungsten inert welding is a form of electric arc welding in which the electrode is a nonconsumable tungsten wire. TIG welding is now called GTA (gas tungsten arc) welding.

Toe-in. A condition of landing gear alignment in which the front of the tires are closer together than the rear. When the aircraft rolls forward, the wheels try to move closer together.

Toe-out. A condition of landing gear alignment in which the front of the tires are further apart than the rear. When the aircraft rolls forward, the wheels try to move farther apart.

Torque. A force that produces or tries to produce rotation.

Torque links. The hinged link between the piston and cylinder of an oleo-type landing gear shock absorber. The torque links allow the piston to move freely in and out of the landing gear cylinder, but prevent it rotating. The torque links can be adjusted to achieve and maintain the correct wheel alignment. Torque links are also called scissors and nutcrackers.

Torque tube. A tube in an aircraft control system that transmits a torsional force from the operating control to the control surface.

Torsion rod. A device in a spring tab to which the control horn is attached. For normal operation, the torsion rod acts as a fixed attachment point, but when the control surface loads are high, the torsion rod twists and allows the control horn to deflect the spring tab.

Total air pressure. The pressure a column of moving air will have if it is stopped.

TMC. Thrust management computer.

Toroidal coil. An electrical coil wound around a ring-shaped core of highly permeable material.

Total air temperature. The temperature a column of moving air will have if it is stopped.

TR unit. A transformer-rectifier unit. A TR unit reduces the voltage of AC and changes it into DC.

Tractor powerplant. An airplane powerplant in which the propeller is mounted in the front, and its thrust pulls the airplane rather than pushes it.

Trammel (verb). To square up the Pratt truss used in an airplane wing. Trammel points are set on the trammel bar so they measure the distance between the center of the front

spar, at the inboard compression strut, and at the center of the rear spar at the next compression strut outboard. The drag and antidrug wires are adjusted until the distance between the center of the rear spar at the inboard compression strut and the center of the front spar at the next outboard compression strut is exactly the same as that between the first points measured.

Trammel bar. A wood or metal bar on which trammel points are mounted to compare distances.

Trammel points. A set of sharp-pointed pins that protrude from the sides of a trammel bar.

Transducer. A device that changes energy from one form to another. Commonly used transducers change mechanical movement or pressures into electrical signals.

Transformer rectifier. A component in a large aircraft electrical system used to reduce the AC voltage and change it into DC for charging the battery and for operating DC equipment in the aircraft.

Translational lift. The additional lift produced by a helicopter rotor as the helicopter changes from hovering to forward flight.

Transonic flight. Flight at an airspeed in which some air flowing over the aircraft is moving at a speed below the speed of sound, and other air is moving at a speed greater than the speed of sound.

Transverse pitch. See gauge.

Triangle. A three-sided, closed plane figure. The sum of the three angles in a triangle is always equal to 180°.

Tricresyl phosphate (TCP). A chemical compound, $(CH_3C_6H_4O)^3PO$, used in aviation gasoline to assist in scavenging the lead deposits left from the tetraethyl lead.

Trim tab. A small control tab mounted on the trailing edge of a movable control surface. The tab may be adjusted to provide an aerodynamic force to hold the surface on which it is mounted deflected in order to trim the airplane for hands-off flight at a specified airspeed.

Trimmed flight. A flight condition in which the aerodynamic forces acting on the control surfaces are balanced and the aircraft is able to fly straight and level with no control input.

Trip-free circuit breaker. A circuit breaker that opens a circuit any time an excessive amount of current flows, regardless of the position of the circuit breaker's operating handle.

Troubleshooting. A procedure used in aircraft maintenance in which the operation of a malfunctioning system is analyzed to find the reason for the malfunction and to find a method for returning the system to its condition of normal operation.

True airspeed (TAS). Airspeed shown on the airspeed indicator (indicated airspeed) corrected for position error and nonstandard air temperature and pressure.

Trunnion. Projections from the cylinder of a retractable landing gear strut about which the strut pivots retract.

Truss-type structure. A type of structure made up of longitudinal beams and cross braces. Compression loads between the main beams are carried by rigid cross braces. Tension loads are carried by stays, or wires, that go from one main beam to the other and cross between the cross braces.

Turbine. A rotary device actuated by impulse or reaction of a fluid flowing through vanes or blades that are arranges around a central shaft.

Turn and slip indicator. A rate gyroscopic flight instrument that gives the pilot an indication of the rate of rotation of the aircraft about its vertical axis. A ball in a curved glass tube shows the pilot the relationship between the centrifugal force and the force of gravity. This indicates whether or not the angle of bank is proper for the rate of turn. The turn and slip indicator shows the trim condition of the aircraft and serves as an emergency source of bank information in case the attitude gyro fails. Turn and slip indicators were formerly called needle and ball and turn and bank indicators.

Turnbuckle. A component in an aircraft control system used to adjust cable tension. A turnbuckle consists of a brass tubular barrel with right-hand threads in one end and left-hand in the other end. Control cable terminals screw into the two ends of the barrel, and turning the barrel pulls the terminals together, shortening the cable.

Twist drill. A metal cutting tool turned in a drill press or handheld drill motor. A twist drill has a straight shank and spiraled flutes. The cutting edge is ground on the end of the spiraled flutes.

Twist rope. A stripe of paint on flexible hose that runs the length of the hose. If this stripe spirals around the hose after it is installed, it indicates the hose was twisted when it was installed. Twist stripes are also called lay lines.

Two-terminal spot-type fire detection system. A fire detection system that uses individual thermoswitches

installed around the inside of the area to be protected. These thermoswitches are wired in parallel between two separate circuits. A short or an open circuit can exist in either circuit without causing a fire warning.

Type Certificate Data Sheets (TCDS). The official specifications of an aircraft, engine, or propeller issued by the Federal Aviation Administration. The TCDS lists pertinent specifications for the device, and it is the responsibility of the mechanic and/or inspector to ensure, on each inspection, that the device meets these specifications.

U

UHF. Ultrahigh frequency.

Ultimate tensile strength. The tensile strength required to cause a material to break or to continue to deform under a decreasing load.

Ultraviolet-blocking dope. Dope that contains aluminum powder or some other pigment that blocks the passage of ultraviolet rays of the sun. The coat of dope protects the organic fabrics and clear dope from deterioration by these rays.

Undamped oscillation. Oscillation that continues with an unchanging amplitude once it has started.

Underslung rotor. A helicopter rotor whose center of gravity is below the point at which it is attached to the mast.

Unidirectional fabric. Fabric in which all the threads run in the same direction. These threads are often bound with a few fibers run at right angles, just enough to hold the yarns together and prevent their bunching.

Unloading valve. This is another name for system pressure regulator. See system pressure regulator.

Utility finish. The finish of an aircraft that gives the necessary tautness and fill to the fabric and the necessary protection to the metal, but does not have the glossy appearance of a show-type finish.

V

Vapor lock. A condition in which vapors form in the fuel lines and block the flow of fuel to the carburetor.

Vapor pressure. The pressure of the vapor above a liquid needed to prevent the liquid evaporating. Vapor pressure is always specified at a specific temperature.

Variable displacement pump. A fluid pump whose output is controlled by the demands of the system. These pumps normally have a built-in system pressure regulator. When the demands of the system are low, the pump moves very little fluid, but when the demands are high, the pump moves a lot of fluid. Most variable displacement pumps used in aircraft hydraulic systems are piston-type pumps.

Varnish (aircraft finishing material). A material used to produce an attractive and protective coating on wood or metal. Varnish is made of a resin dissolved in a solvent and thinned until it has the proper viscosity to spray or brush. The varnish is spread evenly over the surface to be coated, and when the solvents evaporate, a tough film is left.

Varsol. A petroleum product similar to naphtha used as a solvent and cleaning fluid.

Veneer. Thin sheets of wood "peeled" from a log. A wide-blade knife held against the surface of the log peels away the veneer as the log is rotated in the cutter. Veneer is used for making plywood. Several sheets of veneer are glued together, with the grain of each sheet placed at 45° or 90° to the grain of the sheets next to it.

Vertical axis. An imaginary line, passing vertically through the center of gravity of an airplane.

Vertical fin. The fixed vertical surface in the empennage of an airplane. The vertical fin acts as a weathervane to give the airplane directional stability.

VFR. Visual flight rules.

VHF. Very high frequency.

Vibrator-type voltage regulator. A type of voltage regulator used with a generator or alternator that intermittently places a resistance in the field circuit to control the voltage. A set of vibrating contacts puts the resistor in the circuit and takes it out several times a second.

Viscosity. The resistance of a fluid to flow. Viscosity refers to the "stiffness" of the fluid, or its internal friction.

Viscosity cup. A specially shaped cup with an accurately sized hole in its bottom. The cup is submerged in the liquid to completely fill it. It is then lifted from the liquid and the time in seconds is measured from the beginning of the flow through the hole until the first break in this flow. The viscosity of the liquid relates to this time.

Vixen file. A metal-cutting hand file that has curved teeth

across its faces. Vixen files are used to remove large amounts of soft metal.

V_{NE}. Never-exceed speed. The maximum speed the aircraft is allowed to attain in any conditions of flight.

Volatile liquid. A liquid that easily changes into a vapor.

Voltmeter multiplier. A precision resistor in series with a voltmeter mechanism used to extend the range of the basic meter or to allow a single meter to measure several ranges of voltage.

VOR. Very high frequency Omni Range navigation.

VORTAC. An electronic navigation system that contains both a VOR and a TACAN facility.

Vortex (plural vortices). A whirling motion in a fluid.

Vortex generator. Small, low-aspect-ratio airfoils installed in pairs on the upper surface of a wing, on both sides of the vertical fin just ahead of the rudder, and on the underside of the vertical stabilizers of some airplanes. Their function is to pull high-energy air down to the surface to energize the boundary layer and prevent airflow separation until the surface reaches a higher angle of attack.

W

Warp clock. An alignment indicator included in a structural repair manual to show the orientation of the piles of a composite material. The ply direction is shown in relation to a reference direction.

Warp threads. Threads that run the length of the roll of fabric, parallel to the selvage edge. Warp threads are often stronger than fill threads.

Warp tracers. Threads of a different color from the warp threads that are woven into a material to identify the direction of the warp threads.

Wash in. A twist in an airplane wing that increases its angle of incidence near the tip.

Wash out. A twist in an airplane wing that decreases its angle of incidence near the tip.

Watt. The basic unit of electrical power. One watt is equal to 1/746 horsepower.

Way point. A phantom location created in certain electronic navigation systems by measuring direction and distance from a VORTAC station or by latitude and longitude coordinates from Loran or GPS.

Web of a spar. The part of a spar between the caps.

Weft threads. See fill threads.

Wet-type vacuum pump. An engine-driven air pump that uses steel vanes. These pumps are lubricated by engine oil drawn in through holes in the pump base. The oil passes through the pump and is exhausted with the air. Wet-type pumps must have oil separators in their discharge line to trap the oil and return it to the engine crankcase.

Wing fences. Vertical vanes that extend chordwise across the upper surface of an airplane wing to prevent spanwise airflow.

Wing heavy. An out-of-trim flight condition in which an airplane flies hands off, with one wing low.

Wire bundle. A compact group of electrical wires held together with special wrapping devices or with waxed string. These bundles are secured to the aircraft structure with special clamps.

Woof threads. See fill threads.

Work. The product of force times distance.

Y

Yaw. Rotation of an aircraft about its vertical axis.

Yaw damper. An automatic flight control system that counteracts the rolling and yawing produced by Dutch roll. See Dutch roll. A yaw damper senses yaw with a rate gyro and moves the rudder an amount proportional to the rate of yaw, but in the opposite direction.

Yield strength. The amount of stress needed to permanently deform a material.

Z

Zener diode. A special type of solid-state diode designed to have a specific breakdown voltage and to operate with current flowing through it in its reverse direction.

Zeppelin. The name of large, rigid, lighter-than-air ships built by the Zeppelin Company in Germany prior to and during World War I.

Zero-center ammeter. An ammeter in a light aircraft

electrical system located between the battery and the main bus. This ammeter shows the current flowing into or out of the battery.

Index

Symbols

100-hour Inspection 2-59
(NACA) Method of Double Flush Riveting 4-45

A

Absolute humidity 2-2
AC Alternators 9-40
AC Alternators Control Systems 9-44
Acceleration 2-3
Accelerometers 10-31
Accumulators
  Cylindrical 12-31
  Operation 12-31
  Spherical 12-30
Acetone 8-1
Acetylene 5-6
Acrylic Urethanes 8-4
Actuators
  Hydraulic Motor 12-33
  Linear Actuators 12-32
  Rotary Actuators 12-33
Adhesive pot life 6-10
Adhesives 7-8
Adjusting the Spray Pattern 8-10
Adjustment of Bend Radius 4-68
Aerodynamics 2-1,2-2
Aileron Installation 2-39
Ailerons 1-24
Aileron station 1-37
Air Compressors 8-5
Air Conditioning Systems 16-34
aircraft 1-4
Aircraft Batteries 9-20
  Aircraft Battery Inspection 9-25
  Aircraft Battery Ratings by Specification 9-22
  Battery and Charger Characteristics 9-24
    Lead-Acid Batteries 9-24
    NiCd Batteries 9-24
  Battery Charging 9-22
    Constant Current Charging 9-23
    Constant Voltage Charging (CP) 9-23
  Battery Freezing 9-22
  Battery Maintenance 9-23
  Capacity 9-22
  Installation Practices 9-25
    Battery hold down devices 9-27
    Battery sump jars 9-25
    Battery venting 9-25
    External surface 9-25
    Installing batteries 9-27
    Quick-disconnect type battery 9-27
    Replacing lead-acid batteries 9-25
  Lead-Acid Batteries 9-20
  Storing and Servicing Facilities 9-22
  Temperature Correction 9-22
  Ventilation Systems 9-25
Aircraft Brakes 13-42
Aircraft Electrical Systems 9-46
  Large Multiengine Aircraft 9-59
    AC Power Systems 9-59
      Parallel Systems 9-61
      Split-Bus Power Distribution Systems 9-60
      Split-Parallel Systems 9-63
  Light Multiengine Aircraft 9-55
    Power Distribution on Multiengine Aircraft 9-56
  Small Single-Engine Aircraft 9-46
    AC Supply 9-53
    Alternator Circuit 9-47
    Avionics Power Circuit 9-49
    Battery Circuit 9-46
    External Power Circuit 9-48
    Generator Circuit 9-47
    Landing Gear Circuit 9-50
    Starter Circuit 9-49
Aircraft Fuel Systems 14-9
Aircraft Heaters 16-57
Aircraft Inspection 2-58
Aircraft Lighting Systems 9-100
  Exterior Lights
    Anticollision Lights 9-101
    Landing and Taxi Lights 9-101

Position Lights 9-100
Wing Inspection Lights 9-103
Interior Lights 9-103
Maintenance and Inspection of Lighting Systems . 9-103
Aircraft Metal Structural Repair 4-1
Aircraft Oxygen Systems 16-3
Aircraft Pneumatic Systems 12-46
Aircraft Pressurization Systems 16-21
Aircraft Rigging 2-38
aircraft structures 1-1
Aircraft Tires and Tubes 13-74
Aircraft Tubes 13-87
Tire Inspection 13-87
Tube Construction and Selection 13-87
Tube Storage and Inspection 13-87
Aircraft Wheels 13-33
Aircraft Wood and Structural Repair 6-1
Air Cycle Air Conditioning 16-34
Cabin Temperature Control System
Typical System Operation 16-40
Component Operation 16-36
Bleed Air Bypass 16-36
Pack Valve 16-36
Primary Heat Exchanger 16-36
Refrigeration Bypass Valve 16-39
Water Separator 16-39
Pneumatic System Supply 16-34
System Operation 16-34
Airfoil 2-3
airframe 1-39
Air in the Brake System 13-67
Airplane Assembly 2-39
Airplane Assembly and Rigging 2-36
Air Tools 7-19
Air Traffic Control (ATC) Transponder Inspections ... 2-61
Alcohol 8-1
Alignment 13-14
Alternate Pressure Application 7-31
Alternating Current (AC) Introduction 9-8
Definitions 9-9
Cycle Defined 9-9
Effective 9-9
Frequency Defined 9-10
Instantaneous 9-9
Peak 9-9
Period Defined 9-10
Phase Relationships 9-10
Values of AC 9-9
Wavelength Defined 9-10
Alternator Drive 9-43
Alternator Voltage Regulators 9-39
Altimeter and Static System Inspections 2-61
Aluminum Alloys 4-29
Aluminum Soldering 5-20
Aluminum Welding 5-17
Amorphous Thermoplastics 7-7
Amphibious aircraft 1-35
Amplifiers 11-20
Common-Collector Amplifier 11-21
Common-Emitter Amplifier 11-20
and Fittings 16-19
and Retraction 13-14
Angle Adapters 4-16
Angle of Attack 2-5
Angle of Incidence 2-5
Annual and 100-Hour Inspections 2-62
Annual Inspection 2-59
Antennas 11-36
Length 11-37
Types
Loop Antenna 11-40
Marconi Antenna 11-39
Anti-Chafe Tape 3-4
anti-ice
Common-Base Amplifier 11-21
Antiservo tabs 1-33
Anti-Skid 13-60
Anti-Skid Control Valves 13-63
Anti-Skid System Maintenance 13-66
Control Unit 13-66
Control Valve 13-66
Wheel Speed Sensor 13-66
Anti-Skid System Tests 13-65
Ground Test 13-65
In-Flight Test 13-66
Control Units 13-61
System Operation 13-60
Touchdown and Lock Wheel Protection 13-64
Wheel Speed Sensors 13-61
Antitorque Pedals 2-29
Antitorque System 1-44
Application of Cement 7-56
Applying the Finish 8-11
Applying the Glue/Adhesive 6-11
Approval of New Avionics Equipment Installations . 11-70
Approval of Repair 4-92
Aramid (Kevlar®) fiber-reinforced plastics 7-52
Arc Welding Procedures 5-24
Argon 5-6
Aromatic Fuels 14-4
Assessment of Damage 4-91
Atmosphere 2-1

Atmospheric pressur 2-1
Atmospheric pressure 2-1
Audible Sonic Testing (Coin Tapping) 7-15
Autoclave 7-22
Autogyro 2-16
Automated Tap Test 7-15
Automatic Center Punch 4-5
Automatic Flight Control System (AFCS) 10-63
Autopilot Components 10-60
  Autopilot Functions 10-62
  Command Elements 10-60
  Computer and Amplifier 10-60
  Feedback or Followup Element 10-61
  Sensing Elements 10-60
  Yaw Dampening 10-63
Autopilot Systems 10-58
Autorotation 2-26
Auxiliary Control Surfaces 1-26
Auxiliary Lift Devices 2-11
Aviation Fuel 14-3
Avionics in Aviation Maintenance 11-1
  History of Avionics 11-1
Axes of an Aircraft 2-8

B

Balance panels 1-31
Balance tabs 2-11
Balsa Wood 7-12
Band Saw 4-10
Bar Folding Machine 4-21
Base measurement 4-58
Basic Analog Circuits 11-18
Basic Fuel System Requirements 14-1
Basic Hydraulic Systems 12-5
  Closed-Center Hydraulic Systems 12-6
  Open Center Hydraulic Systems 12-5
Bead Weld 5-27
Bearing 4-3
Bell Stabilizer Bar System 2-29
Belt Drive Clutch 2-35
Bend allowance (BA) 4-58
Bending 4-3,1-6
Bending a U-Channel 4-61
Bend radius 4-58
Bend tangent line (BL) 4-59
Benzene 8-1
Bernoulli's Principle 2-3
Bias 3-2
Bidirectional (Fabric) 7-3
Biplane Assembly and Rigging 2-55
Bismaleimides (BMI) 7-7
Bladder Fuel Tanks 14-21
Blanket Method 3-11
Bleed Air Systems 16-57
Bleeder Ply 7-19
Bleeding Master Cylinder Brake Systems 13-67
Bleeding Power Brake Systems 13-69
  Fluid Quantity and Type 13-69
  Inspection for Leaks 13-69
  Proper Bolt Torque 13-70
Bleeding Shock Struts 13-14
Bleedout Technique 7-28
Bleriot, Louis 1-1
Blind Bolts 4-53,7-48
Blind Fasteners 7-47
Blind Fasteners (Nonstructural) 4-56
Blind Rivets 4-47
Blushing 8-13
Boeing 737 Next Generation Hydraulic System 12-37
  Filter Units 12-39
  Indications 12-41
  Landing Gear Transfer Unit 12-41
  Power Transfer Unit (PTU) 12-39
  Pumps 12-39
  Reservoirs 12-37
  Standby Hydraulic System 12-41
Boeing 777 Hydraulic System 12-41
  Center Hydraulic System 12-44
    Center Hydraulic Isolation System (CHIS) 12-45
    Central Hydraulic System Reset 12-46
    Filter 12-44
    Nose Gear Isolation Valve 12-46
    Reservoir 12-44
  Left and Right System Description
    Filter Module 12-43
    Indication 12-43
    Pumps 12-43
    Reservoir 12-43
Bolt and Bushing Holes 6-18
Bolted Repairs 7-43
Bonded Flush Patch Repairs 7-38
Bonding 11-73
Boron 7-5
Boundary Layer 2-6
Box and Pan Brake (Finger Brake) 4-22
box beam 1-12
Box beam 1-11
Brake Actuating Systems 13-50
  Boosted Brakes 13-54
  Independent Master Cylinders 13-51
  Power Brakes 13-55
    Brake Control Valve/Brake Metering Valve 13-56

Brake Malfunctions and Damage....13-72
Chattering or Squealing....13-73
Overheating....13-72
Brazing and Soldering....5-19
Breather Material....7-21
Brinelling....4-89
Brushing....8-4
Bucking Bar....4-35
Bumping....4-58
Burnishing....4-89
Burr....4-89
Burring Tool....4-14
Butt Joints....5-29
Buttock line....1-37

C

Cable Connectors....2-44
Cable construction....2-39
Cable designations....2-39
Cable Drums....2-46
Cable Guides....2-41
Cable Inspection....2-41
Cable System Installation....2-41
Cable Systems....2-39
Cable Tension....2-43,2-50
cantilever design....1-10
Carbon Brakes....13-49
Carbon fiber reinforced plastics....7-52
Carbon/Graphite....7-5
Carbon Monoxide Detectors....17-8
Carburizing Flame....5-12
Cargo and Baggage Compartment Fire Detection and Extinguisher System....17-14
Cargo Compartment Extinguishing System....17-15
Smoke Detector System....17-15
Cargo Compartment Classification....17-13
Cargo Fire Detection....17-13
catalysts....3-7
Caul....6-10
Cayley, George....1-1
C-Clamps....4-28,7-31
Cementing....7-55
Center Punch....4-5
Centrifugal Clutch....2-35
Ceramic Fibers....7-5
Chanute, Octave....1-1
Characteristics of a Good Weld....5-15
Chassis Punch....4-6
Chattering....4-89
Checking Dihedral....2-48
Checking Engine Alignment....2-49
Checking Fin Verticality....2-48
Checking for Fuel System Contaminants....14-49
Detection of Contaminants....14-52
Foreign Fuel Contamination....14-51
Fuel Contamination Control....14-54
Microorganisms....14-51
Solid Particle Contaminants....14-50
Checking Incidence....2-48
Check Valves and Flashback Arrestors....5-7
Chemical Anti-Icing....15-9
Chemical or Solid Oxygen....16-4
Chemical Oxygen Systems....16-15
Chemical Rain Repellant....15-26
Windshield Surface Seal Coating....15-27
Chemical Stability....12-1
Chemical Stripping....8-20
CherryBUCK® 95 KSI One-Piece Shear Pin....4-51
CherryMAX® Bulbed blind rivet....4-47
Cherry Maxibolt® Blind Bolt System....4-53
Cherry's E-Z Buck® (CSR90433) Hollow Rivet....7-47
Chip Chasers....4-20
Chrome Molybdenum....5-16
Circular-Cutting Saws....4-7
Clamps and Vises....4-28
Classes of Fires....17-1
Classification of Damage....4-90
Cleaning....7-56
Close contact adhesive....6-10
Closed angle....4-59
Closed assembly time....6-10
Closed End Bend (More Than 90°)....4-73
Clutch....2-34
Coaxial Cable....9-95
Cobalt Alloy Drill Bits....4-17
Co-bonding....7-28
Co-curing....7-27
Collective Pitch....2-27
Combinations of Damages....7-13
Combination Square....4-3
Combustion Heaters....16-59
Controls....16-60
Ignition System....16-60
Maintenance and Inspection....16-61
Safety Features....16-61
Ventilating Air System....16-59
Common Paint Troubles....8-12
Common Spray Gun Problems....8-12
Composite Honeycomb Sandwich Repairs....7-33
Composite Repairs....7-19
Composition of the Atmosphere....16-1
Compound Curve Forming....7-54

Compression 4-2,1-6
Compression Riveting.....4-38
Concave Surfaces.....4-78
Conduit.....9-82
Flexible Conduit.....9-82
Rigid Conduit.....9-82
Connecting Torch.....5-10
Connectors
Adjacent Locations.....9-94
Drainage 9-95
Spare Contacts for Future Wiring 9-94
Voltage and Current Rating.....9-94
Wire Installation Into the Connector.....9-94
Wire Support 9-95
Considerations.....11-71
Construction and Installation of Deice Boots 15-18
Continuous Airworthiness Maintenance Program (CAMP) 2-65
Continuous-Loop Systems.....17-3
Control 2-8
Control of Cabin Pressure.....16-27
Air Distribution 16-33
Cabin Air Pressure Regulator and Outflow Valve.16-30
Cabin Air Pressure Safety Valve Operation.....16-31
Cabin Pressure Controller 16-29
Cabin Pressurization Troubleshooting 16-34
Pressurization Gauges 16-32
Pressurization Modes 16-27
Control Operating Systems 2-39
Controls.....1-45
Control Surface Travel.....2-50
Convex Surfaces 4-78
Cooling and Moisture 11-71
Coriolis Effect.....2-21
Corner Joints 5-30
Cornice Brake 4-21
Correct Forming of a Weld 5-15
Corrosion..... 4-89,7-15
Corrosion Precautions.....7-45
Corrosion Treatment 4-92
Corrugated Skin Repair.....4-97
Cotton Covered Aircraft 3-24
Count.....3-2
Countersinking..... 4-40,7-51
Countersinking Tool 4-36
Countersinking Tools.....4-41
Countersunk Rivets.....4-40
Covering Processes 3-8
Cowling.....1-18
Crack 4-89
Crimping 4-58
Cross coat.....3-2
Curing of Composite Materials.....7-31
Curing Stages of Resins 7-7
Current 9-2
Conventional Current Theory and Electron Theory...9-3
Current Limiting Devices 9-98
Circuit Breakers.....9-99
Fuses.....9-99
Curved Flanged Parts.....4-76
Cut.....4-89
Cutting Equipment 7-52
Cutting Processes and Precautions.....7-52
Cutting Tools 4-7
Cutting Torch.....5-8
Cyclic Pitch.....2-28

D

Damage Necessitating Replacement of Parts 4-90
Damage Removal.....4-92
Damage Repairable by Insertion.....4-90
Damage Repairable by Patching.....4-90
Damage Requiring Core Replacement and Repair to One or Both Faceplates.....7-35
DC Generators 9-30
Compound Wound DC Generators 9-31
DC Generator Maintenance.....9-32
Generator Ratings.....9-31
Parallel (Shunt) Wound DC Generators.....9-31
Series Wound DC Generators 9-31
DC Generators and Controls.....9-27
Construction Features of DC Generators
Armature 9-29
Field Frame.....9-28
Generators 9-27
Decals.....8-17
Defueling.....14-56
De Havilland Mosquito.....1-3
Deice Boot Maintenance.....15-21
Deice System for Turboprop Aircraft.....15-13
Deicing and Anti-icing of Transport Type Aircraft...15-24
Critical Surfaces 15-24
Deicing Fluid.....15-24
Holdover Time (HOT).....15-24
Deicing System Components
Control Valve 15-16
Deflate Valve.....15-16
Distributor Valve.....15-16
Dry-Type Engine-Driven Air Pump.....15-16
Inlet Filter.....15-18
Manifold Assembly 15-18
Oil Separator.....15-16

Regulators and Relief Valves 15-17
Timer/Control Unit 15-17
Wet-Type Engine-Driven Air Pump 15-16
Delamination and Debonds 7-13
Density 2-2
Dent 4-89
Dents at a Cluster Weld 5-31
Dents Between Clusters 5-31
Description 4-30
Design of a Patch for a Nonpressurized Area 4-97
Detonation 14-4
Die Grinder 4-13
Different Flames 5-12
Digital Aircraft Systems 11-27
Digital Building Blocks 11-25
AND Gate 11-26
Buffer Gate 11-25
EXCLUSIVE OR Gate 11-26
NAND Gate 11-27
Negative Logic Gates 11-28
NOR Gate 11-27
NOT Gate 11-25
OR Gate 11-26
Digital Electronics 11-24
Digital Tuners and Audio Panels 11-28
Dimpling 4-41
Dimpling Dies 4-36
Dimpling Inspection 4-43
Diodes 11-4
Dipping 8-4
Directional Stability 2-10
Direction Indicating Instruments 10-41
Disc Sander 4-11
Display of Marks 8-16
Display of Nationality and Registration Marks 8-16
Dividers 4-4
Dollies and Stakes 4-27
Dope 8-3
Double spread 6-10
Double Vacuum Debulk Principle 7-41
Downdraft Tables 7-53
Drag 2-6,2-7
Drill Bit Sizes 4-17
Drill Bushing Holder Types 4-19
Drill Extensions and Adapters 4-15
Drilling 4-39,7-49,7-55
Drilling Large Holes 4-20
Drill Lubrication 4-17
Drill Press 4-15
Drill Stops 4-17
Drive Nut-Type of Blind Bolt 4-54
Drive Punch 4-6
Driving the Rivet 4-40
Drop Hammer 4-24
Dry Fiber Material 7-8
Dry Powders 17-10
Dual-Disc Brakes 13-46
Dual Purpose Flight Control Surfaces 1-26
Dual Rotor Helicopter 2-17
Dutch Roll 2-10
Dynamic Balance 2-36
Dynamic Stability 2-10

E

Eddie-Bolt® Fasteners 7-46
Edge Distance 4-33
Edge Joints 5-30
Edges of the Panel 4-99
Effective Translational Lift (ETL) 2-23
Electrically Driven Gyroscopic Instrument Systems . 10-51
Electrical Temperature Measuring Indication 10-35
Electrical Resistance Thermometer 10-36
Ratiometer Electrical Resistance Thermometers ... 10-36
Electric Arc Welding 5-1
Electric Deice Boots 15-22
Electric Heating Systems 16-58
Electromagnetic Generation of Power 9-4
Electromotive Force (Voltage) 9-3
Electron Control Valves 11-4
Electronic Blade Tracker 2-30
Electronic Flight Information Systems 10-67
Electronic Centralized Aircraft Monitor (ECAM) . 10-68
Electronic Flight Instrument System (EFIS) 10-68
Electronic Instruments 10-64
Electronic Attitude Director Indicator (EADI) 10-64
Electronic Horizontal Situation Indicators (EHSI) 10-66
Electronic Method 2-32
Electronic Oscillation 11-23
Elevated Temperature Curing 7-32
Elevator 1-25
Emergency Backup Systems 12-49
Dump Valve 12-50
Emergency Extension Sequence: 12-50
Gear Emergency Extension Cable and Handle 12-50
Nitrogen Bottles 12-50
Emergency Brake Systems 13-58
Brake Deboosters 13-59
Parking Brake 13-58
Emergency Extension Systems 13-21
Empennage 1-19
Empennage Installation 2-39
Engine Instruments 10-3

Engine Mount Repairs 5-35
Engine mounts 1-18
Envelope Bagging 7-31
Envelope Method 3-11
Epoxy 8-3,7-6
Equal Pressure Torch 5-8
Equipment 7-50
Equipment Setup 5-10
Erosion 4-89
Evaluating the Rivet 4-43
Evolution of Hydraulic Systems 12-7
Exhaust Shroud Heaters 16-58
Expander Tube Brakes 13-49
Expansion and Contraction of Metals 5-28
Extension Drill Bits 4-16
External and Internal Inspection 6-2
External Bonded Patch Repairs 7-41
External Bonded Repair With Prepreg Plies 7-41
External Repair Using Precured Laminate Patches 7-42
External Repair Using Wet Layup and Double Vacuum Debulk Method (DVD) 7-41
Extinguishing Agents and Portable Fire Extinguishers17-9
Eye Protection 7-53

F

Fabric Cement 3-6,3-16
Fabric Heat Shrinking 3-17
Fabric Impregnation Using a Vacuum Bag 7-30
Fabric Impregnation With a Brush or Squeegee 7-30
Fabric patch 6-19
Fabric Sealer 3-6
Fabric Strength 3-8
Fabric Testing Devices 3-10
Fastener Materials 7-45
Fasteners Used with Composite Laminates 7-45
Fastener System for Sandwich Honeycomb Structures (SPS Technologies Comp Tite) 7-45
Fenestron® 1-44
Fenwal System 17-3
Fiber Breakage 7-13
Fiber Forms 7-2
Fiberglass 7-5
Fiberglass Coverings 3-24
Fiberglass Molded Mat Repairs 7-40
Fiberlite 7-49
Fiber Orientation 7-1
Field Effect Transistors (FET) 11-15
Files 4-13
Filler Rod 5-9
Fillers 3-6
Fillet Weld 5-27
Filling LOX Systems 16-19
Film Adhesives 7-8
Filters 12-12
  Filter Bypass Valve 12-14
  Filter Differential Pressure Indicators 12-14
  Maintenance of Filters 12-13
  Micron-Type Filters 12-13
Finishing Tapes 3-20
Fire Detection/Overheat Systems 17-2
Fire Detection System Maintenance 17-17
Fire Detection System Troubleshooting 17-18
Fire Extinguisher System Maintenance 17-19
  Agent Containers 17-20
  Container Pressure Check 17-19
  Discharge Cartridges 17-19
Fire Hazards When Fueling or Defueling 14-57
Fire Point 12-2
Fire Prevention 17-20
Fire Protection 7-53
Fire Zones 17-7
Fisheyes 8-14
Fixed and Retractable Landing Gear 13-4
fixed-wing aircraft 1-5
Flag and Pole 2-30
Flame Detectors 17-8
Flange 4-58
Flanged Angles 4-75
Flap Installation 2-39
Flapping 1-42
Flaps 1-26
Flap station 1-37
Flash Point 12-2
Flat 4-59
Flat Position Welding 5-27
Flawed Fastener Holes 7-13
Flight Control Surfaces 1-21
Flight Director Systems 10-64
Flight Instruments 10-2
Flight Management System (FMS) 10-72
Floats 4-97
Flow Between Interconnected Tanks 14-2
Flush Patch 4-96
Flutter and Vibration Precautions 4-87
Fly-By-Wire Contro 2-14
Foaming Adhesives 7-10
Folding a Box 4-71
Folding Sheet Metal 4-58
Form Block or Die 4-78
Formed or Extruded Angles 4-74
Former or Bulkhead Repair 4-102
Forming by Bumping 4-78

Forming Methods....7-54
Forming Procedures and Techniques....7-54
Forming Process....4-56
Forming Tools....4-20
Forming With an English Wheel....4-25
Forms....7-54
Formula 1: Bend Allowance for a 90° Bend....4-63
Formula 2: Bend Allowance for a 90° Bend....4-64
Forward Flight....2-22
Fowler flaps....1-27
Freewheeling Unit....2-35
Fresh Air Breathing Systems....8-8
Friction-Locked Blind Rivets....4-47
Frost Removal....15-24
Fuel Filters....14-32
Fuel Heaters and Ice Prevention....14-35
Fuel Identification....14-6
Fueling....14-55
Fueling and Defueling Procedures....14-55
Fuel Lines and Fittings....14-23
Fuel Pumps....14-27
  Centrifugal Boost Pumps....14-28
  Ejector Pumps....14-29
  Hand-Operated Fuel Pumps....14-27
  Pulsating Electric Pumps....14-30
  Vane-Type Fuel Pumps....14-31
Fuel System Components....14-18
Fuel System Independence....14-1
Fuel System Indicators....14-36
  Fuel Flowmeters....14-39
  Fuel Pressure Gauges....14-43
  Fuel Quantity Indicating Systems....14-36
  Fuel Temperature Gauges....14-43
  Pressure Warning Signal....14-44
Fuel System Lightning Protection....14-1
Fuel System Repair....14-45
Fuel System Servicing....14-49
Fuel Tank Installation....14-3
Fuel Tank Repair....14-46
  Bladder Tanks....14-47
  Fire Safety....14-48
  Integral Tanks....14-47
  Riveted Tanks....14-47
  Soldered Tanks....14-47
  Welded Tanks....14-46
Fuel Tanks....14-2
Fuel Tank Tests....14-3
Fuel Valves....14-24
  Cone Valves....14-25
  Hand-Operated Valves....14-25
  Manually-Operated Gate Valves....14-26
  Motor-Operated Valves....14-26
  Poppet Valves....14-26
  Solenoid-Operated Valves....14-27
Fully Articulated Rotor....2-17
Fully Articulated Rotor System....1-42
Fundamentals of Electronics....11-3
  Analog Electronics....11-4
  Analog Versus Digital Electronics....11-3
Fungicide....3-7
fuselage....1-7
Fuselage....1-40
Fuselage stations....1-37

G

Galling....4-89
Gap-filling adhesive....6-10
gap seals....1-33
Gas Cylinders....5-10
Gaseous Oxygen....16-3
Gaseous Oxygen Systems....16-5
  Continuous-Flow Systems....16-7
  Demand-Flow Systems....16-9
  Flow Indicators....16-10
  Oxygen Plumbing and Valves....16-14
  Oxygen Storage Cylinders....16-6
  Oxygen Systems and Regulators....16-7
Gas Metal Arc Welding....5-2,5-21
Gas Tungsten Arc Welding....5-4
Gas Welding....5-1
Gas Welding and Cutting Equipment....5-6
Gas Welding Procedures....5-14
Generator Controls....9-33
  Functions of Generator Control Systems....9-33
    Differential Voltage....9-34
    Overexcitation Protection....9-34
    Overvoltage Protection....9-34
    Parallel Generator Operations....9-34
    Reverse Current Sensing....9-34
    Voltage Regulation....9-33
  Generator Controls for High Output Generators....9-34
  Generator Controls for Low-Output Generators....9-34
    Carbon Pile Regulators....9-35
    Current Limiter....9-36
    Reverse-Current Relay....9-36
    Three-Unit Regulators....9-35
    Voltage Regulator....9-35
  Theory of Generator Control....9-33
Glass fiber reinforced plastics....7-52
Glued Joint Inspection....6-3
Glue line....6-10
Glues (Adhesives)....6-9

Gouge 4-89
Governor 2-28
Gravity 2-6
Gravity-Feed Gun 8-7
Gray Enamel Undercoat 8-3
Greige 3-2
Grinding Wheels 4-12
Grommets 3-6,3-19
Groove Weld 5-27
Ground Deicing of Aircraft 15-23
Ground Effect 2-21
Gussets 3-19
Gyroscopic Forces 2-19
Gyroscopic Instruments 10-51
Electric Attitude Indicators 10-55
Gyroscopic Direction Indicator or Directional Gyro (DG) 10-56
Mechanical Gyros 10-51
Solid State Gyros and Related Systems 10-52
Other Attitude and Directional Systems 10-54
Ring Laser Gyros (RLG) 10-52
Turn-and-Slip Indicator 10-57
Turn Coordinators 10-56
Vacuum-Driven Attitude Gyros 10-54

H

Halogenated Hydrocarbons 17-9
Hand Cutting Tools 4-12
Hand Forming 4-73
Handling of the Torch 5-13
Hand-Operated Shrinker and Stretcher 4-27
Hand Rivet Set 4-36
Hand Tools 4-35,7-19
Hardwood Form Blocks 4-27
Heat Blanket 7-23
Heat Bonder 7-23
Heat Exchangers 12-31
Heating 7-54
Heat Lamp 7-23
Heat Press Forming 7-24
Heat Sources 7-22
Helicopter Fuel Systems 14-16
Helicopter Power Systems 2-33
Helicopter Structures 1-39
Helicopter Vibration 2-30
Helium 5-6
Hex Nut and Wing Nut Temporary Sheet Fasteners 4-29
High Frequency Vibration 2-30
High-Pressure Systems 12-47
High rush-in circuits 9-97
High-Speed Aerodynamics 2-14
Hi-Lite® Fastening System 4-51
Hi-Lok® and Huck-Spin® Lockbolt Fasteners 7-45
Hi-Lok® Fastening System 4-50
Hi-Tigue® Fastening System 4-50
Hole Drilling 4-14
Hole Duplicator 4-7
Hole Preparation 4-39,4-55
Hole Transfer 4-39
Honeycomb 7-11
horizontal stabilizer stations 1-38
Hoses 5-10
Hot Air System 7-24
Hot Dimpling 4-42
Hovering Flight 2-19
Huck Blind Bolt System 4-53
Human Respiration and Circulation 16-1
Carbon Monoxide Poisoning 16-2
Oxygen and Hypoxia 16-1
Humidity 2-2
Hydraulic Fluids 12-1
Hydraulic Fluid Contamination 12-3
Contamination Check 12-3
Hydraulic Sampling Schedule 12-4
Sampling Procedure 12-4
Contamination Control 12-4
Hydraulic System Flushing 12-5
Intermixing of Fluids 12-3
Mineral-Based Fluids 12-2
Phosphate Ester-Based Fluid (Skydrol®) 12-3
Polyalphaolefin-Based Fluids 12-2
Hydraulic Motor-Driven Generator (HMDG) 12-34
Hydraulic Power Pack System 12-7
Hydraulic Power Systems 12-7
Hydraulic System Components 12-7
Reservoirs 12-7
Air-Pressurized Reservoirs 12-9
Fluid-Pressurized Reservoirs 12-11
Nonpressurized Reservoirs 12-8
Pressurized Reservoirs 12-9
Reservoir Servicing 12-11
Hydrogen 5-7
Hydromechanical Control 2-13
Hydropress Forming 4-25

I

Ice and Snow Removal 15-25
Ice Control Systems 15-1
Ice Detector System 15-3
Ice Prevention 15-3
Icing Effects 15-1
Impedance 9-14

Inclusion....4-89
Inductive circuits....9-97
Inert Cold Gases....17-9
Inertial Navigation System (INS)/Inertial Reference System (IRS)....11-69
Injector Torch....5-8
Inspection....4-50
Inspection for Corrosion....4-92
Inspection, Maintenance, and Troubleshooting of Rubber Deicer Boot Systems....15-20
  Adjustments....15-20
  Inspection....15-21
  Operational Checks....15-20
  Troubleshooting....15-20
Inspection of Damage....4-88
Inspection of Masks and Hoses....16-19
Inspection of Riveted Joints....4-91
Inspection Openings....4-108
Inspection Rings....3-6
Installation of Communication and Navigation Equipment 11-71
Installation of High-Shear Fasteners....4-49
Installation of Rivets....4-32
Installation Procedure....4-52
Installation Procedures....7-57
Installed Fire Extinguishing Systems....17-11
  CO2 Fire Extinguishing Systems....17-11
  Containers....17-11
  Fire Switch....17-13
  Halogenated Hydrocarbons Fire Extinguishing Systems 17-11
  Pressure Indication....17-11
  Two-Way Check Valve....17-12
Instrument Housings and Handling....10-76
Instrument Installations and Markings....10-77
  Instrument Mounting....10-79
  Instrument Panels....10-77
  Instrument Power Requirements....10-79
  Instrument Range Markings....10-79
Integral Fuel Tanks....14-21

J

Jet Transport Aircraft Fuel Systems....14-13
Joggling....4-80
Junkers, Hugo....1-2

K

Keeping Weight to a Minimum....4-86
Kett Saw....4-7
Kevlar®....7-5
Kidde System....17-3
  Automatic Self-Interrogation....17-5
  Combination Fire and Overheat Warning....17-4
  Dual-Loop Systems....17-5
  Fault Indication....17-5
  Fire Detection Control Unit (Fire Detection Card)..17-6
  Sensing Element....17-4
  Support Tube Mounted Sensing Elements....17-5
  System Test....17-5
  Temperature Trend Indication....17-5

L

Lacquers....8-4
Laminated Structures....7-1
landing gear....1-33
Landing gear....1-34
Landing Gear Arrangement....13-2
  Tail Wheel-Type Landing Gear....13-2
  Tricycle-Type Landing Gear....13-3
Landing Gear Repairs....5-33
Landing Gear Rigging and Adjustment....13-26
  Drag and Side Brace Adjustment....13-27
  Landing Gear Retraction Test....13-28
Landing Gear Safety Devices....13-22
  Ground Locks....13-22
  Landing Gear Position Indicators....13-23
Landing Gear System Maintenance....13-24
Landing Gear Types....13-1
Lap Joints....5-30
Lap Joint Weld....5-28
Lap or Scab Patch....4-93
Large Aircraft Hydraulic Systems....12-37
Large Aircraft Retraction Systems....13-20
Large Coating Containers....8-6
Large Reciprocating-Engine Aircraft Fuel Systems..14-12
Lateral Stability....2-10
Lavatory Smoke Detectors....17-16
Lavatory Smoke Detector System....17-16
Layout Method....4-72
Layout or Flat Pattern Development....4-59
Layout Tools....4-3
Layup Materials....7-19
Layup Process (Typical Laminated Wet Layup)....7-28
Layups....7-25
Layup Tapes....7-21
Layup Techniques....7-28
Leading Edge Slat Anti-Ice System....15-5
  WAI Control System....15-6
  WAI Ducts....15-5
  WAI Indication System....15-8
  WAI Pressure Sensor....15-5
  WAI Valve....15-5

Leg 4-58
Lift....2-6
Light Emitting Diodes....11-17
Lightening Holes....4-81
Lighting and Adjusting the Torch....5-12
Lightning Protection Fibers 7-5
Lilienthal, Otto....1-1
Linseed Oil....8-2
Liquid Oxygen 16-4
Loading Information onto a Radio Wave 11-31
Amplitude Modulation (AM)....11-31
Single Side Band (SSB) 11-33
Location and Placement of Marks 8-17
Lockbolt Fastening Systems 4-51
Lockbolt Inspection 4-52
Lockbolt Removal....4-52
Longeron Repair 4-103
Longitudinal Stability 2-10
Low-Pressure Systems 12-51

M

Machining Processes and Equipment 7-49
Magnesium Welding....5-18
Magnetic Compass....10-41
Main Rotor System 1-42
Main Rotor Transmission 2-34
Maintaining Original Contour....4-86
Maintaining Original Strength 4-86
Maintenance....1-36
Maintenance Manual....2-38
Maintenance of Instruments and Instrument Systems
Altimeter Tests 10-81
Autopilot System Maintenance 10-83
LCD Display Screens 10-84
Magnetic Compass Maintenance and Compensation.....
10-82
Pitot-Static System Maintenance and Tests 10-81
Tachometer Maintenance 10-81
Vacuum System Maintenance 10-83
Maintenance Procedure....11-75
Major Components of a Laminate 7-1
Making Straight Line Bends 4-60
Male and Female Die Forming 7-55
Manual Foot-Operated Sheet Metal Shrinker....4-26
Manufacturer's Inspection Program 2-60
Manufacturer's Service Information....2-39
Manufacturing and In-Service Damage 7-12
Marking Method 2-32
Marking Tools....4-4
Masking and Applying the Trim....8-15
Masking for the Trim 8-15
Masking Materials 8-15
Materials 6-7
Matrix Imperfections 7-13
Matrix Materials....7-6
Maule punch tester....3-10
Mechanical Control....2-13
Mechanical-Lock Blind Rivets 4-47
Mechanical Movement Indicators....10-28
Medium Frequency Vibration....2-30
Metal Decals with Cellophane Backing....8-17
Metal Decals with No Adhesive 8-18
Metal Decals With Paper Backing....8-17
Metal Oxide Semiconductor Field Effect Transistors
(MOSFETs) and Complementary Metal Oxide
Semiconductor (CMOS) 11-15
Methylene Chloride 8-2
Methyl Ethyl Ketone (MEK) 8-1
Microshavers....4-39
mildewicide....3-7
Mineral Spirits 8-2
Minor Core Damage (Filler and Potting Repairs)....7-34
Mixing Equipment 8-9
Mixing Resins 7-29
Moisture Detector 7-18
monocoque....1-7
Monospar 1-11
Motion....2-2
Motors 9-97
Multiple-Disc Brakes 13-46
Multiple Pass Welding....5-26
multispar 1-11
Multispar....1-11

N

Nacelles....1-17
Nacelle station....1-38
Naphtha....8-2
National Advisory Committee for Aeronautics 4-45
Navigation Instruments....10-3
Negligible Damage 4-90
Neutral axis 4-59
Neutral Flame....5-12
Neutron Radiography....7-18
Newton's Laws of Motion 2-3
Nibblers....4-8
Nick....4-90
Nicopress® process....2-40
No Bleedout 7-28
Noise 11-3
Nondestructive Inspection (NDI) of Composites 7-15
Non-Electric Temperature Indicators 10-34

Nonwoven (Knitted or Stitched) 7-3
Nose Wheel Steering Systems 13-29
Small Aircraft 13-29
NOTAR 1-44
Notcher 4-11
Numbering Systems 1-37

O

Octane and Performance Number Rating 14-5
Off Aircraft Brake Servicing and Maintenance 13-70
Automatic Adjuster Pins 13-70
Bolt and Threaded Connections 13-70
Brake Housing and Piston Condition 13-71
Discs 13-70
Seal Condition 13-71
Torque Tube 13-71
Offset Flapping Hinge 2-29
Ohm's Law 9-1
On Aircraft Servicing 13-66
Onboard Oxygen Generating Systems (OBOGS) 16-5
Open and Closed Bends 4-72
Open and Closed Skin Area Repair 4-97
Open angle 4-59
Open assembly time 6-10
Open End Bend (Less Than 90°) 4-73
Open Wiring 9-77
Operation and Handling Tips 13-90
Braking and Pivoting 13-91
Hydroplaning 13-92
Landing Field and Hangar Floor Condition 13-91
Takeoffs and Landings 13-91
Taxiing 13-91
Opposition to Current Flow of AC 9-11
Apparent Power 9-19
Inductive Reactance 9-11
Parallel AC Circuits 9-18
Power in AC Circuits 9-19
Resistance 9-11
True Power 9-19
Optical Considerations 7-53
Orange Peel 8-13
Oscillator Circuits 11-23
Other Aircraft Inspection and Maintenance Programs 2-64
Outside the Member 4-99
Oven 7-22
Overhead Position Welding 5-28
Oxidizing Flame 5-12
Oxy-acetylene Cutting 5-13
Oxy-acetylene Welding of Ferrous Metals 5-15
Oxy-Acetylene Welding of Nonferrous Metals 5-17
Oxygen 5-7
Oxygen System Inspection and Maintenance 16-20
Oxygen Systems and Components 16-5
Oxygen System Servicing 16-16

P

Paint Booth 8-5
Paint Finishes 8-18
Paint System Compatibility 8-18
Paint Touchup 8-18
Paper Decals 8-17
Parasite drag 2-7
Paste Adhesives 7-10
Patches 4-93
Patch Installation on the Aircraft 7-42
Peel Ply 7-21
Pens 4-4
Pentodes 11-5
Perforated Release Film 7-21
Periodic Maintenance Inspections 2-59
Phenolic Resin 7-6
Photodiodes and Phototransistors 11-16
Physiology of Flight 16-1
Piccolo Former 4-26
Pin Fastening Systems (High-Shear Fasteners) 4-49
Pinholes 8-13
Pinked edge 3-2
Pitot-Static Pressure-Sensing Flight Instruments 10-15
Airspeed Indicators 10-23
Altimeters and Altitude 10-15
Vertical Speed Indicator 10-21
Pitot-Static Systems 10-11
Air Data Computers (ADC) and Digital Air Data Computers (DADC) 10-15
Pitot Tubes and Static Vents 10-11
Pitting 4-90
Plasma Arc Cutting 5-6
Plasma Arc Welding 5-4
Plastic Media Blasting (PMB) 8-20
Plug Patch 6-20
Ply 3-2
Ply Orientation Warp Clock 7-29
Plywood Skin Repairs 6-19
Pneumatic Circular Cutting Saw 4-7
Pneumatic Continuous-Loop Systems 17-6
Averaging Function 17-6
Discrete Function 17-7
Pneumatic Deice Boot System for GA Aircraft 15-12
GA System Operation 15-12
Pneumatic Drill Motors 4-14
Pneumatic Power System Maintenance 12-51
Pneumatic Rain Removal Systems 15-27

Pneumatic Rivet Gun 4-37
Pneumatic System Components 12-47
Air Compressors 12-48
Check Valves 12-48
Chemical Drier 12-49
Control Valves 12-48
Desiccant/Moisture Separator 12-49
Filters 12-49
Relief Valves 12-48
Restrictors 12-49
Variable Restrictor 12-49
Polishing 7-57
Polybenzimidazoles (PBI) 7-7
Polyester Fabric Repairs 3-23
Polyester Resins 7-6
Polyether ether ketone (PEEK) 7-7
Polyimides 7-7
Polyurethane 8-4
Poor Adhesion 8-12
Pop Rivets 4-56
Portable Power Drills 4-14
Portable Water Tank Ice Prevention 15-30
Power Factor 9-19
Powerplant 1-40,2-33
powerplant stations 1-38
Power Systems 9-40
Power Tools 4-37
Power Transfer Unit (PTU) 12-34
Preflight 2-59
Pre-Impregnated Products (Prepregs) 7-8
Preparation of Wood for Gluing 6-10
Preparing Glues for Use 6-11
Prepreg 7-25
Press Brake 4-22
Pressing or clamping time 6-10
Pressure 2-1,10-6
Pressure-Driven Gyroscopic Instrument Systems 10-50
Pressure Instruments 10-7
Engine Oil Pressure 10-7
Engine Pressure Ratio (EPR) 10-9
Fuel Pressure 10-9
Hydraulic Pressure 10-10
Manifold Pressure 10-7
Pressure Switches 10-11
Pressure Measuring Instruments 10-3
Pressure of the Atmosphere 16-21
Pressure on the Joint 6-11
Pressure Regulators 5-7
Pressure Type Sensor Responder Systems 17-6
Pressurization 1-9
Pressurization Issues 16-23
Prevention of Oxygen Fires or Explosions 16-20
Primary Flight Controls 2-10
Primary Flight Control Surfaces 1-23
Primer 3-6
Primer and Paint 8-9
Primers 8-2
Profile drag 2-7
Progressive Inspection 2-59
Propeller Deice System 15-22
Electrothermal Propeller Device System 15-22
Protective Equipment for Personnel 8-21
Puddle 5-15
Pull-Type Blind Bolt 4-53
Pulse Echo Ultrasonic Inspection 7-16
Pumps 12-14
Hand Pumps 12-15
Power-Driven Pumps 12-15
Classification of Pumps 12-16
Constant-Displacement Pumps 12-16
Gear-Type Power Pump 12-16
Gerotor Pump 12-17
Piston Pump 12-17
Bent Axis Piston Pump 12-18
Inline Piston Pump 12-18
Vane Pump 12-18
Variable-Displacement Pump 12-19
Basic Pumping Operation 12-19
Depressurized Mode 12-21
Normal Pumping Mode 12-20
Punches 4-4
Purity 14-7

R

Radio Communication 11-29
Radiography 7-18
Radio Navigation 11-40
Automatic Direction Finder (ADF) 11-44
Collision Avoidance Systems 11-55
Traffic Collision Avoidance Systems (TCAS) ... 11-56
Distance Measuring Equipment (DME) 11-50
Emergency Locator Transmitter (ELT) 11-63
Global Positioning System (GPS) 11-68
Instrument Landing Systems (ILS) 11-47
Compass Locators 11-48
Localizer 11-48
Long Range Aid to Navigation System (LORAN) 11-67
Radar Beacon Transponder 11-53
Altitude Encoders 11-55
Transponder Tests and Inspections 11-55
Radio Altimeter 11-59
Radio Magnetic Indicator (RMI) 11-47

VOR Navigation System 11-40
Weather Radar 11-61
Radio Transmitters and Receivers 11-35
Receivers 11-36
Transceivers 11-36
Transmitters 11-35
Radio Waves 11-30
Radius Dimpling 4-42
Radome Repairs 7-40
Rain Control Systems 15-26
Ram Air Turbine (RAT) 12-33
Reamers 4-17
Rebalancing Methods 2-37
Rebalancing Procedures 2-37
Reciprocating Engine 2-33
Reciprocating Engine Fuel—AVGAS 14-3
Reciprocating Saw 4-8
Rectifiers 11-17
Red Baron's Fokker DR-1 1-3
Red Iron Oxide 8-3
Reducing Radio Interference 11-73
Regulators 5-10
Reinforcing Tape 3-4
Rejuvenator 3-7
Relative humidity 2-2
Relays 9-98
Release Agents 7-19
Relief Hole Location 4-72
Remote Indicating Compass 10-43
Remote Indicating Slaved Gyro Compass (Flux Gate Compass) 10-44
Remote Sensing and Indication 10-24
Removal of Decals 8-18
Removal of Mechanically Locked Blind Rivets 4-48
Removal of Pin Rivets 4-50
Removal of Rivets 4-44
Repairability of Sheet Metal Structure 4-90
Repair Layout 4-32
Repair Material Selection 4-92
Repair of Lightening Holes 4-100
Repair of Steel Tubing Aircraft Structure by Welding 5-31
Repair of Stressed Skin Structure 4-93
Repair of Wood Aircraft Components 6-12
Repair of Wood Aircraft Structures 6-6
Repair Parts Layout 4-92
Repair Safety 7-52
Repairs to a Pressurized Area 4-100
Replacement of a Panel 4-97
Replacement of Brake Linings 13-71
Goodyear Brakes 13-71
Replacing Rivets 4-45
Required Inspections 2-59
Requirements for Overheat and Fire Protection Systems ... 17-1
Resin Injection Repairs 7-39
Respiratory Protection 7-53
retarder 3-7
Reusable Sheet Metal Fasteners 4-28
Rib and Web Repair 4-104
Rib Bracing 3-4
Rib Lacing 3-18
Rib Lacing Cord 3-5
Rigging 2-15
Rigging Checks 2-46
Rigging Fixtures 2-43
Rigging Specifications 2-38
Right Angle and 45° Drill Motors 4-14
Rigid Removable Fuel Tanks 14-18
Rigid Rotor 2-17
Rigid Rotor System 1-42
Rivet Cutter 4-35
Rivet Head Shape 4-31
Riveting Procedure 4-39
Rivet Layout Example 4-34
Rivet Length 4-32
Rivet Nut 4-55
Rivet Pitch 4-34
Rivet Selection 4-92
Rivet Sets/Headers 4-38
Rivet Spacers 4-4
Rivet Spacing 4-33
Rivet Spacing and Edge Distance 4-92
Rivet Strength 4-32
Room Temperature Curing 7-32
Rotary Machine 4-23
Rotary Punch Press 4-10
Rotary-Wing 2-16
Rotary-wing aircraft 1-5
Rotor Systems 2-17
Rudder 1-25
ruddervator 1-26

S

Safety in the Paint Shop 8-20
Sags and Runs 8-13
Sandbag Bumping 4-79
Sandbags 4-27
Sandwich Structures 7-10,7-34
Saturation Techniques 7-29
Sawing 7-55
Scales 4-3
Scarf Patch 6-23

Score 4-90
Scratch....4-90
Screws and Nutplates in Composite Structures 7-49
Scroll Shears 4-10
Seals 12-34
Backup Rings 12-36
Gaskets 12-36
O-Ring Installation 12-37
O-Rings 12-35
O-Ring Color Coding 12-36
Seal Materials 12-36
U-Ring 12-35
V-Ring Packings 12-35
Wipers 12-37
Seams 3-14
Seam Welding 5-4
Selvage edge 3-2
Semiconductor Diodes 11-8
Semiconductors 11-6
Semicrystalline Thermoplastics 7-7
Semimonocoque 1-8
Semirigid Rotor 2-17
Semirigid Rotor System 1-42
Sequence for Painting a Single-Engine or Light Twin Airplane 8-12
Series Wound DC Generators 9-31
Servicing Gaseous Oxygen 16-16
Draining an Oxygen System 16-16
Filling an Oxygen System 16-17
Leak Testing Gaseous Oxygen Systems 16-16
Purging an Oxygen System 16-18
Servicing Shock Struts 13-12
servo tab 1-30
Servo tabs 2-11
Setback (SB) 4-59
Sewing Thread 3-5
Seyboth 3-10
Shear ....,1-6
Shear Strength and Bearing Strength 4-86
sheet metal forming and flat pattern layout terminology.... 4-58
Sheet Metal Hammers and Mallets 4-28
Sheet Metal Holding Devices 4-28
Sheet Metal Repair 4-85
Shielded Metal Arc Welding 5-2
Shielding 11-72
Shimmy Dampers
Non-Hydraulic Shimmy Damper 13-33
Piston-Type 13-32
Vane-Type 13-32
Shock Absorbing and Non-Shock Absorbing Landing Gear 13-6
Bungee Cord 13-7
Leaf-Type Spring Gear 13-6
Rigid 13-7
Shock Struts 13-7
Shock Strut Operation 13-10
Shop Tools 4-9
Shotbags and Weights 7-31
Shrinking 4-57,4-75
Shrinking and Stretching Tools 4-26
Shrinking Blocks 4-27
Shrinking Tools 4-26
Shrink Tape 7-31
Sight line 4-59
Silicon Controlled Rectifiers 11-11
Silver Soldering 5-20
Single Disc Brakes 13-42
Fixed-Disc Brakes 13-44
Floating Disc Brakes 13-42
Single Rotor Helicopter 2-16
Single Side Vacuum Bagging 7-31
Single spread 6-10
Siphon Feed Gun 8-7
Size Requirements for Different Aircraft 8-17
Skids 1-40
Skin Protection 7-53
Skis 1-34
Slats 1-29
Sleeve Bolts 4-55
Slip Roll Former 4-22
small airplanes
Pump Feed Systems 14-10
Small Multiengine (Reciprocating) Aircraft Fuel Systems 14-11
High-Wing Twin 14-12
Low-Wing Twin 14-11
Small Single-Engine Aircraft Fuel Systems 14-9
Gravity Feed Systems 14-9
High-Wing Aircraft With Fuel Injection System 14-10
Smoke Detectors 17-8
Ionization Type 17-8
Light Refraction Type 17-8
Smoke, Flame, and Carbon Monoxide Detection Systems. 17-8
Snake Attachment 4-16
Soft or Harsh Flames 5-13
Soldering 5-20
Solenoids 9-98
Solid Laminates 7-38
Solid Release Film 7-21
Solid Shank Rivet 4-30

Solid State Magnetometers 10-45
Solid-State Regulators 9-39
Solutions to Heat Sink Problems 7-25
Sources of Operating Air 15-12
Turbine Engine Bleed Air 15-12
Sources of Power for Gyroscopic Instruments 10-45
Sources of Pressurized Air 16-24
Turbine Engine Aircraft 16-25
Spar Repair 4-103
Special Fabric Fasteners 3-5
Specialized Repairs 4-108
Speed Brakes 1-29
Spin Forming 4-25
Splayed Patch 6-20
split flap 1-27
spoiler 1-29
Spot Welding 5-4
Spray Dust 8-15
Spray Equipment 8-5
Spray Gun Operation 8-10
Spray Guns 8-6
Spraying 8-4
Spring-Back 2-44
Spring tabs 2-11
Squaring Shear 4-9
stabilator 1-26
Stability 2-8
Stability Augmentation Systems (SAS) 2-30
stabilizers 1-21
Stabilizer Systems 2-29
Stain 4-90
Stainless Steel 5-16
stall fence 1-33
Stall Warning and Angle of Attack (AOA)Indicators 10-32
Static Discharge Wicks 11-73
Static Stability 2-8
Steel 5-15
Step Drill Bits 4-16
Storage and Handling 7-53
Storage of Finishing Materials 8-21
Straight Extension 4-16
Straight Line Bends 4-73
Strength Characteristics 7-1
stress analysis 1-5
Stresses Applied to Rivets 4-33
Stresses in Structural Members 4-1
Stretch Forming 4-24,7-54
Stretching 4-57,4-76
Stretching Tools 4-26
Stretching With V-Block Method 4-74
Stringer Repair 4-101
Stringers 1-8
Stripping the Finish 8-20
Structural Alignment 2-47
Structural Fasteners 4-30
Structural Repair Manual (SRM) 2-39
Structural Stresses 1-5
Structural Support During Repair 4-91
Subsonic Flow 2-3
Suitable Wood 6-7
Support 13-14,13-16
Support Tooling and Molds 7-19
Surface Ignition and Preignition 14-5
Surface Patch 6-20
Surface Preparation for Touchup 8-19
Surfaces 8-9
Surface Tape 3-4
Swage-type terminals 2-40
Swash Plate Assembly 2-27
Switches 9-95
Double-pole double-throw (DPDT) 9-97
Double-pole single-throw (DPST) 9-97
Double-throw switches 9-97
Precision (Micro) Switches 9-98
Rotary Switches 9-98
Single-pole double-throw (SPDT) 9-97
Single-pole single-throw (SPST) 9-97
Spring loaded switches 9-97
Toggle and Rocker Switches 9-97
Two position switch 9-97
Symmetry Check 2-49
Synchroscope 10-31
Synchro-Type Remote-Indicating Instruments 10-25
DC Selsyn Systems 10-25
Synthetic Enamel 8-4
System Air Filters 8-6
System Servicing 16-54
Charging the System 16-57
Checking Compressor Oil 16-56
Evacuating the System 16-56
Leak Test 16-55
Performance Test 16-56
Purging the System 16-56

T

Tabs 1-30
Tachometers 10-28
Electric Tachometers 10-29
Mechanical Tachometers 10-28

tail cone 1-21
Tail Rotor Tracking 2-32
Tail Wheel Gear 1-35
Tapered Shank Bolt 4-55
Technical Standard Order 3-3
Technician Certification 16-57
Tee Joints 5-30
Temperature and Altitude 16-22
Temperature Measuring Instruments 10-34
Temperature Variations in Repair Zone 7-25
Tension ..... ,1-6
Tension Regulators 2-44
Terms Used in the Glue Process 6-10
Testing Glued Joints 6-12
Tetrodes 11-5
The Eddie-Bolt® 2 Pin Fastening System 4-53
Theory of Refrigeration
  Basic Vapor Cycle 16-44
Thermal Electric Anti-Icing 15-9
Thermal Pneumatic Anti-icing 15-4
Thermal Survey 7-25
Thermal Survey of Repair Area 7-25
Thermal Switch System 17-2
Thermocouple Placement 7-24
Thermocouples 7-24
Thermocouple System 17-2
Thermocouple Temperature Indicators 10-37
  Turbine Gas Temperature Indicating Systems 10-39
Thermography 7-18
Thermoplastic Resins 7-7
Thermoplastics 7-53
Thermosetting plastics 7-53
Thermosetting Resins 7-6
thinners 3-7
Thinners 8-2
Thixotropic Agents 7-8
Throatless Shear 4-9
Throttle 2-28
Through Transmission Ultrasonic Inspection 7-16
Thrust 2-6
TIG Welding 5-21
TIG Welding 4130 Steel Tubing 5-22
TIG Welding Aluminum 5-23
TIG Welding Magnesium 5-23
TIG Welding Stainless Steel 5-22
TIG Welding Titanium 5-23
Tire Classification 13-74
  Bias Ply or Radial 13-75
  Ply Rating 13-75
  Tube-Type or Tubeless 13-75
  Types 13-74
Tire Construction 13-76
  Carcass Plies 13-76
  Sidewall 13-78
    Chine 13-78
  Tread 13-76
Tire Inspection on the Aircraft 13-78
  Inflation 13-78
  Tread Condition 13-79
    Tread Damage 13-81
    Tread Depth and Wear Pattern 13-79
Tire Mounting 13-87
  Tubeless Tires 13-87
  Tube-Type Tires 13-89
Tire Removal 13-83
Tire Repair and Retreading 13-86
Tire Storage 13-86
Titanium 4-84
Toluene 8-2
Topcoats 3-6
Torch Brazing of Aluminum 5-19
Torch Brazing of Steel 5-19
Torch Tips 5-8
Torque Compensation 2-18
Torque Tubes 2-46
Torsion ..... ,1-6
Total Air Temperature Measurement 10-40
Total developed width (TDW) 4-59
Trailing Edge and Transition Area Patch Repairs 7-39
Trailing Edge Repair 4-106
Transfer Punch 4-6
Transistors 11-10
Translating Tendency 2-21
Transmission 1-40
Transmission Lines 11-74
Transmission System 2-34
Transparent Plastics 7-53
Transverse Pitch 4-34
Triacs 11-13
Tricycle gear 1-36
Trim Controls 2-11
Triodes 11-4
Troubleshooting the Fuel System 14-45
  Fuel Leak Classification 14-45
  Location of Leaks and Defects 14-45
  Replacement of Gaskets, Seals, and Packings 14-46
truss 1-7
Tube Splicing with Inside Sleeve Reinforcement 5-32
Tube Splicing with Outer Split Sleeve Reinforcement 5-32
Turbine Engine Fuels 14-7
  Turbine Engine Fuel Issues 14-9
  Turbine Engine Fuel Types 14-8

Turbine Fuel Volatility 14-7
Turbine Engines 1-40
Turnbuckles 2-44
Turpentine 8-2
Two Hole 4-15
Tying Wire Bundles 9-86
Type Certificate Data Sheet 2-38
Types of Damage and Defects 4-89
Types of Drill Bits 4-16
Types of Fiber 7-5
Types of Welding 5-1
Typical Repairs for Aircraft Structures 4-97

U

Ultrasonic Bondtester Inspection 7-17
Ultrasonic Inspection 7-16
Unidirectional (Tape) 7-3
Unijunction Transistors (UJT) 11-14
Upsetting 4-90
Urethane 8-3
Urethane Coating 8-4
Use of Bend Allowance Chart for a 90° Bend 4-64
Use of Chart for Other Than a 90° Bend 4-64
Using a Formula to Calculate the Setback 4-63
Using a J-Chart To Calculate Total Developed Width 4-67
Using a Setback Chart to Find the Setback 4-63
Using a Sheet Metal Brake to Fold Metal 4-68

V

Vacuum Bag 7-21
Vacuum Bagging Techniques 7-31
Vacuum Bag Materials 7-19
Vacuum Compaction Table 7-22
Vacuum Equipment 7-22
Vacuum Forming With a Female Form 7-55
Vacuum Forming Without Forms 7-55
Vacuum Systems 10-46
Twin-engine Aircraft Vacuum System Operation .. 10-49
Typical Pump-Driven System 10-47
Venturi Tube Systems 10-46
Vacuum Tubes 11-4
Valves 12-22,16-19
Flow Control Valves 12-22
Check Valve 12-24
Hydraulic Fuses 12-26
Orifice-Type Check Valve 12-24
Pressure-Controlled Sequence Valve 12-25
Selector Valves 12-22
Sequence Valves 12-24
Pressure Control Valves 12-27
Pressure Reducers 12-29
Pressure Regulators 12-28
Relief Valves 12-27
Shuttle Valves 12-29
Shutoff Valves 12-29
Vapor Cycle Air Conditioning Servicing Equipment 16-50
Full Service Refrigerant Recovery, Recycling, Evacuation, and Recharging Units 16-52
Leak Detectors 16-53
Manifold Set, Gauges, Hoses, and Fittings 16-51
Refrigerant Source 16-52
Vacuum Pumps 16-52
Vapor Cycle Air Conditioning System Components
Compressor 16-48
Condenser 16-48
Evaporator 16-47
Expansion Valve 16-46
Receiver Dryer 16-45
Refrigerant 16-44
Service Valves 16-49
Vapor Lock 14-3
Varnish 8-2
V-Blocks 4-27
Velocity 2-3
Vertical Flight 2-22
Vertical Magnetic Compass 10-43
Vertical Position Welding 5-28
vertical stabilizer stations 1-38
very light jet 1-4
Vibration Isolation 11-72
Vinyl Ester Resin 7-6
Vinyl Film Decals 8-18
Viscosity 12-1
Viscosity Measuring Cup 8-8
Visual Inspection 7-15
Volatility 14-3
Vortex generators 1-33

W

Warnings and Cautions 10-73
Annunciator Systems 10-73
Aural Warning Systems 10-74
Warp Clock 7-2
Wash Primers 8-3
Water 17-10
Water line 1-37
web members 1-8
weight 2-6
Weight 2-7
Welded Joints Using Oxy-Acetylene Torch 5-29
Welding 5-1
Welding Eyewear 5-8

Welding Gases 5-6
Welding Hose 5-7
Wet Layups 7-25
Wet or Dry Grinder 4-11
Wheel Construction
Outboard Wheel Half 13-35
Wheel Inspection 13-36
Off Aircraft Wheel Inspection 13-37
Balance Weights 13-41
Cleaning the Wheel Assembly 13-38
Cleaning the Wheel Bearings 13-38
Disassembly of the Wheel 13-37
Fusible Plug Inspection 13-41
Inspection of the Wheel Halves 13-40
Key and Key Screw Inspection 13-41
Wheel Bearing Inspection 13-38
Bruising 13-39
Flase Brinelling 13-39
Galling 13-38
Overheating 13-38
Staining and surface marks 13-39
Wheel Tie Bolt Inspection 13-41
On Aircraft Inspection 13-36
Proper Installation 13-36
Axle Nut Torque 13-36
Wide Area Augmentation System (WAAS) 11-69
Windshield Frost, Fog, and Ice Control Systems
Chemical 15-30
Electric 15-28
Pneumatic 15-30
Windshield Installation 7-57
Windshield Wiper Systems 15-26
Wing and Horizontal and Vertical Stabilizer Anti-icing Systems 15-3
Wing and Stabilizer Deicing Systems 15-11
Wing Anti-ice (WAI) System 15-4
winglet 1-32
Winglets 2-13
wing rib 1-14
Wing Rib Repairs 6-12
Wing Ribs 1-14
Wings 1-9
Wing Skin 1-16
Wing Spars 1-12
Wire Groups and Bundles and Routing 9-77
Bend Radii 9-79
Clamp Installation 9-81
Movable Controls Wiring Precautions 9-82
Protection Against Chafing 9-79
Protection Against High Temperature 9-79
Protection Against Solvents and Fluids 9-80
Protection of Wires in Wheel Well Areas 9-80
Twisting Wires 9-78
Wire and Cable Clamp Inspection 9-82
Wire Identification 9-76
Placement of Identification Markings 9-76
Types of Wire Markings 9-76
Wire Inspection 9-95
Wire Shielding 9-84
Bonding 9-85
Bonding Jumper Installation 9-86
Bonding connections 9-86
Bonding jumper attachment 9-86
Corrosion prevention 9-86
Corrosion protection 9-86
Ground return connection 9-86
Grounding 9-84
Testing of Bonds and Grounds 9-86
Wire Size Selection 9-68
Current Carrying Capacity 9-68
Allowable Voltage Drop 9-74
Computing Current Carrying Capacity 9-70
Electric Wire Chart Instructions 9-75
Maximum Operating Temperature 9-70
Wire Termination
AN/MS Connectors 9-92
Emergency Splicing Repairs 9-91
Junction Boxes 9-91
Stripping Wire 9-87
Terminal Lugs 9-90
Aluminum Wire Terminals 9-91
Copper Wire Terminals 9-90
Crimping Tools 9-91
Pre-Insulated Splices 9-91
Terminal Strips 9-90
Wire Types 9-64
Areas Designated as Severe Wind and Moisture Problem (SWAMP) 9-68
Conductor 9-66
Insulation 9-67
Plating 9-66
Wire Shielding 9-67
Wiring Diagrams 9-64
Block Diagrams 9-64
Pictorial Diagrams 9-64
Schematic Diagrams 9-64
Wiring Installation 9-64
Wood Aircraft Construction and Repairs 6-1
Wood Condition 6-4
Working Inconel® Alloys 625 and 718 4-82
Working Stainless Steel 4-82
Working Titanium 4-84

Woven splice.....2-39
Wright Brothers 1-1
Wrinkling 8-14

Z

Zener Diodes.....11-10
Zinc Chromate 8-3