Table of Contents — Technical Manual Table of Contents. Email questions regarding this manual to: techmanuals@fs-elliott.com

Chapter 1 General Information — Provides a functional description of the equipment and furnishes procedures for receiving, unpacking, handling and storing equipment

Chapter 2 Installation — Provides basic foundation requirements, alignment procedures, piping recommendations and recommended procedures for installing the equipment on its permanent foundation.

Chapter 3 Operation — Provides guidelines for initial startup, routine startup, normal shutdown and emergency shutdown.

Chapter 4 Maintenance — Provides a recommended routine maintenance schedule for individuals responsible for maintaining the equipment. Disassembly, assembly and adjustment procedures are included in this chapter.

Chapter 5 Lubrication — Provides lubricating oil specifications, basic oil requirements and describes the basic lubrication system.

Chapter 6 Control System — Provides detailed information required for operating, adjusting and maintaining the control system.

Chapter 7 Troubleshooting — Provides general instructions for resolving operational problems.

Chapter 8 Accessories — Provides instructions and drawings for auxiliary hardware supplied with the equipment.

Chapter 9 Service / Parts / Sales — Provides assistance, service and training for operators and maintenance personnel and provides a list of FS-Elliott Company offices. Also included is the Normal Maintenance Parts List.

Chapter 10 Technical Drawings — Provides copies of technical drawings associated with FS-Elliott equipment for installation, start-up, operation, maintenance and lubrication. Also provided is a guide for the use of assembly drawings.

© FS-Elliott Co., LLC, 2016

FS-Elliott Co., LLC
5710 Mellon Road
Export, PA USA 15632-8948
Phone: 724-387-3200
Fax: 724-387-3270

Technical Manual

Factory Order / Serial Number: B6ET2E081

Purchaser:	SMART Modular Technologies Brazil
User:	SMART Modular Technologies Brazil
Customer Purchase Order:	4800023668
FS-Elliott Sales Order:	52203

Equipment	Factory Order/Serial No.	Frame
Polaris Air Compressor Regulus R1000 Control System	B6ET2E081	P300+

LIMITATIONS, WARRANTY AND SAFETY

LIMITATION

It is to be noted that none of the drawings or printed material contained in this handbook in any way adds to, detracts from, voids or alters any of the conditions of the contract. Such drawings and/or printed materials are for descriptive purposes only and are not to be construed as determining the scope of supply or the performance of the equipment. Please consult your contract to determine these particulars.

Such drawings shall be deemed to be and remain FS-Elliott's proprietary property and reproduction, distribution or disclosure of any part of the contents is expressly forbidden without FS-Elliott's prior written consent.

WARRANTY

SELLER warrants against defects on all GOODS of SELLER's manufacture for a period of (i) one (1) year from date of startup or use or (ii) eighteen (18) months from the date of DELIVERY, whichever occurs first. SELLER warrants against defects on all PARTS for a period of one (1) year from the date of DELIVERY. SELLER warrants against defects in workmanship on all SERVICES performed by SELLER for a period of ninety (90) days from date of completion of such SERVICES. SELLER's obligation to repair or replace any defective GOODS or PARTS or reperform any defective SERVICES during the warranty period shall be BUYER's exclusive remedy and SELLER's sole liability arising under this warranty or any warranty claim made by BUYER. In order to be entitled to the foregoing warranties, BUYER must notify SELLER in writing of such defects within the applicable warranty period. **EXCEPT AS MAY BE OTHERWISE EXPRESSLY SET FORTH IN WRITING HEREIN, THIS WARRANTY IS PROVIDED IN LIEU OF, AND SELLER EXPRESSLY EXCLUDES ANY AND ALL OTHER WARRANTIES, EXPRESS OR IMPLIED, INCLUDING BUT NOT LIMITED TO ANY EXPRESS OR IMPLIED WARRANTIES OF MERCHANTABILITY AND FITNESS FOR A PARTICULAR PURPOSE OR USE.** BUYER shall bear any and all costs of providing SELLER free and clear access to the GOODS and PARTS (including removal and replacement of systems and structures), de-installation, re-installation and transportation of GOODS and PARTS to SELLER and back to BUYER. No allowance will be made for repairs or alterations made by others without SELLER's prior written consent. If repairs or alterations are attempted without SELLER's prior written consent, this warranty shall be null and void. SELLER assumes no responsibility for damages caused by improper installation, use, handling, or maintenance, including installation by unauthorized third parties, or by operation in violation of rated operating conditions, internal or otherwise, or defects or damages resulting from the use of parts not of SELLER's manufacture or from BUYER's failure to store, install, maintain, and/or operate the GOODS or PARTS in accordance with SELLER's written instructions and drawings and good engineering practice. None of the GOODS furnished by SELLER shall be deemed defective by reason of chemical or abrasive action, excessive heat or failure to resist the action of excessive heat, erosive or corrosive gases or liquids or the deposition of foreign material from such gases or liquids. No repair, replacement or reperformance by SELLER shall extend the applicable warranty period.

STANDARD WARRANTY EXTENSIONS

When FS-Elliott Corona Turbo Blue or Corona Turbo Clear lubricants are utilized in combination with oil testing program and/or distributor-sponsored maintenance programs, as outlined in our extended warranty program, the actual warranty period for the air end component may be extended beyond the periods stated above.

The foregoing are FS-Elliott's standard terms and conditions of warranty. Please consult your contract for any clarifications, alterations and/or modifications thereto.

SAFETY

It is assumed that your safety department will have established a program of safety based upon a thorough analysis of industrial hazards. Before installing and operating or performing maintenance on the equipment described in this instruction book, it is suggested that you again review this program to be certain that it covers the hazards arising from high speed rotating machinery.

It is also important that due consideration be given to those hazards which arise from the presence of electrical power, hot oil, high pressure and temperature, steam, toxic gases and flammable liquids and gases. Proper installation and care of protective guards, shutdown devices and over-pressure protection should also be considered essential parts of any safety program.

Also essential are special precautionary measures to prevent the possibility of applying power to the machine at any time when maintenance work is in progress. The prevention of rotation due to reverse flow in dynamic machinery should not be overlooked.

In general, you should be guided by all basic safety rules associated with the equipment and the process.

WARNING

FS-Elliott Co., LLC, does not assume any responsibility for any property damage or personal injury (including death) resulting from or arising out of operation of this equipment when safety and/or shutdown devices being isolated, disabled or bypassed.

WARNING

It is essential that units equipped with a current transformer have experienced personnel perform installation and testing. Current transformers can develop a lethal voltage and self-destruct if the secondary is open when primary current is present.

COPYRIGHT

The information contained in this technical manual is the property of FS-Elliott Co., LLC and is furnished for use by the assigned recipient only. Reproduction, disclosure or distribution of any part of the contents of this manual is expressly forbidden without written consent of FS-Elliott Co., LLC.

© FS-ELLIOTT CO., LLC 2016

FS- Elliott Co., LLC
5710 Mellon Road
Export, PA 15632-8948 USA

Phone: 724-387-3200
FAX: 724-387-3270
www.fs-elliott.com

ISO 9001:2008 CERTIFIED

PRINTED IN THE U.S.A.

CUSTOMER RESPONSIBILITIES

	Personnel installing the compressor should read this section before starting the unit.

- **Power** - FS-Elliott equipment does not include a power disconnect. For this equipment to be CE compliant, **it is the responsibility of the customer** to provide an Emergency Power Shutoff or Disconnect on all incoming power lines to the FS-Elliott equipment.

- **Air** – FS-Elliott equipment does not include an air pressure safety valve. For this equipment to be CE compliant, **it is the responsibility of the customer** to provide Safety Relief equipment in the site air piping downstream of the compressor.

- **Water** – FS-Elliott equipment does not include a water pressure safety valve. For this equipment to be CE compliant**, it is the responsibility of the customer** to provide Safety Relief equipment in the site water piping.

SAFETY PRECAUTIONS

In addition to the obvious safety rules associated with the operation and maintenance of air compressors, the following safety precautions should be observed to avoid serious injury to personnel.

	Consult Operator's Manual
	Burn Hazard/Hot Surface
	No Step
	Electrical Shock / Electrocution
	Do Not Operate With Guard Removed
	Automatic Start-Up
	Lift Point
	General Warning
	Wear Ear Protection
	Hand Crush Hazard

Regulus End User Programming and Software Authorization

Form FSE-4000 (10/31/05)

Subject to the terms and conditions of this Agreement, FS-Elliott Co., LLC ("**FSE**") hereby grants the end-user of FSE products and services ("**Licensee**"), a non-exclusive license to use the software installed in FSE's Regulus Control Panels ("Software").

Any other use of the Software is not authorized and is strictly forbidden. Notwithstanding the above, Licensee's third-party contractors or consultants shall be permitted to use the Software (a) solely for the benefit of Licensee; (b) only according to the terms of this Agreement; and (c) with technical support to be coordinated through Licensee. Licensee shall at all times be responsible for compliance by its contractors and consultants.

Licensee agrees not to reproduce, deactivate or bypass the security devices for use of the software in other equipment. Licensee agrees to preserve and respect all copyright, proprietary rights and confidentiality notices and other restricted property rights notices on the Software. Licensee agrees not to disassemble or reverse-engineer the software.

This Software is subject to all applicable export laws in accordance with U.S. Export Administration Regulations and Licensee hereby agrees that neither the Software, nor the equipment that it is installed in, are intended to be shipped, either directly or indirectly to any embargoed countries nor used for or in support of any prohibited activities.

FSE warrants the Software will substantially operate according to specifications and is subject to FSE's warranty for the control panels. Unauthorized modifications to the Programming and/or Software will void the warranty.

FSE may terminate this Agreement (i) upon thirty (30) days' prior notice, provided however, that Licensee has not remedied its failure to FSE's satisfaction within the thirty (30) day period; (ii) files a petition in bankruptcy or is adjudged bankrupt; (iii) becomes insolvent; and, (iv) makes an assignment for the benefit of creditors.

This Agreement represents the complete and exclusive statement of the agreements concerning the license between the parties, and may be modified only in writing signed by both parties. Should any provisions of this Agreement be determined to be void, invalid or otherwise unenforceable This Agreement shall be governed by and construed under the laws of the Commonwealth of Pennsylvania.

FS-Elliott Co., LLC
5710 Mellon Road
Export, Pa. USA 15632-8948
Phone (724) 387-3200
Fax (724) 387-3270
www.fs-elliott.com

EQUIPMENT DATA INDEX

GENERAL EQUIPMENT DATA

CONTROL PANEL CONFIGURATION SHEET

UTILITY LIST

GENERAL EQUIPMENT DATA

POLARIS AIR COMPRESSOR: P300+

APPROXIMATE MASS:

Compressor, Baseplate, Cooler & Misc. Parts without Driver 8,300 lb. (3,765 kg)

For Driver Weight, refer to Driver Data Sheet.

BEARINGS:

Pinions - Combination Tilt-Pad Journal/Tapered Land Thrust

Gears - Combination Sleeve Type Journal/Tapered Land Thrust

SEALS:

Pinion Shafts - Horizontally Split Carbon Ring Assemblies

Gear Shafts - Spring-Backed, Radial Type Seal

GEAR SHAFT ROTATION:

Clockwise When Viewed From Coupling End

LUBRICATION:

Turbo Blue Lubricant

CASING SPLIT LINE SEALANT:

Part No. X598-010

Panel Configuration Sheet

Factory Order Number: B6ET2E081
Customer Name: SMART Modular technologies
Date: August 18, 2016
Panel Assembly Number: QP0950- CBMAA
Local Service Shop Phone: 1-800-943-0459
Revision Number: 0

Control Modes:

Description	Option Enabled
Base/Suction Throttle	Yes
Intermittent/Auto/Dual	Yes
Ambient Temp. Comp.	No
System Pressure	Yes

Screen, Communcation & Language

Description	Option Enabled
9" HMI	Yes
Modbus - 485 2 Wire	Yes
Modbus - TCP/IP	No
Intergrated Compressor Ctrl.	No
Language	English

This Section is not used				

Start/Stop:

Description	Option Enabled
MAN/MAN	Yes
AUTO/MAN	Yes
AUTO/AUTO	Yes

Approval Requirements

Description	Option Enabled
UL	No
CE	No
CSA	No

Discrete Inputs:

Description	FSE Abbr.	Option Enabled	Alarm	Trip
Motor Running	M	Yes	---	Yes
E-Stop	ESTOP	Yes	---	Yes
Low Oil Level Switch	LOLS	Yes	Yes	---
Remote Start	RST	Yes	---	---
Remote Stop	RSP	Yes	---	---
Remote Unload	RU	Yes	---	---
Oil Filter Differential Pressure Switch	OFDPS	No	No	---
Air Filter Differential Pressure Switch	AFDPS	No	No	---
Drain Trap Package	DTP	No	No	---

B6ET2E081

Discrete Outputs:

Description	FSE Name	Option Enabled
Main Drive Motor Single Relay Start/Stop	MTR	Yes
Momentary Main Drive Motor Dual Relay Start/Stop	MST/MSP	No
Aux Oil Pump Start/Stop	AOP	Yes
Alarm Horn	HORN	Yes
Common Alarm Light	LT1	Yes
Common Alarm Digital	CAR	Yes
Common Trip Light	LT2	Yes
Common Trip Digital	CTR	Yes
Cooling Water Solenoid Valve	CWS	No
Sound Enclosure Vent Fan	SVF	No
Oil Mist Eliminator	OME	No
Motor Space Heater	MSH	No

System Setpoints:

Setpoint Screen 1		
Parameter	Description	Setpoint
Discharge Air Pressure	The PLC control system utilizes the unloading valve to maintain this pressure at the discharge of the air compressor.	8.50 Bar
Low System Air Pressure	Plant air pressure at which the unit loads and/or automatically starts.	8.30 Bar
Minimum Motor Amps	The minimum operating amperage range of the motor. The minimum setpoint corresponds to the suction throttling horsepower of the unit.	289.5 Amps
Maximum Motor Amps	The maximum operating amperage range of the motor. The maximum setpoint corresponds to the suction throttling horsepower of the unit.	326.7 Amps

Setpoint Screen 2		
Parameter	Description	Setpoint
Inlet Valve Prop Band	These parameters are used to tune the valve for the proper modulation of the inlet valve to the enviromental and system demand.(configurable)	Set on Site
Unloading Valve Prop Band	These parameters are used to tune the valve for the proper modulation of the unloading valve to the enviromental and system demand.(configurable)	Set on Site
Inlet and Unloading Valve Times	These parameters are the delay timers for the opening and closing of the inlet and unloading valves during startup. (configurable)	8 Sec.

B6ET2E081

Setpoint Screen 3		
Parameter	Description	Setpoint
Valve Position to Auto Unload	The point at which after running with the unloading valve open this far or greater for more than three minutes, the compressor will completely unload - unloading valve goes full open and the inlet valve goes fully closed.	40%
Aux Oil Pump Shutoff Pressure	The oil pressure during start-up of the compressor at which the auxiliary oil pump is permitted to shut off.	1.24 Bar
Oil Temp Start Permissive	The oil temperature at which the compressor can be started. The PLC will not permit the compressor to start until this oil temperature is attained.	23 °C
Inlet Valve Position	Clamp Inlet Valve %, When Unloaded/Stopping/Coastdown (configurable)	15%

Setpoint Screen 4		
Parameter	Description	Setpoint
Surge DP Setpoint	Differential Pressure Setpoint for Surge Detection.	0.34 Bar
Surge DT Setpoint	Differential Time setpoint for Surge Detection in Seconds.	0.30 Sec.
Adaptive Control Increment	The amount of incremental adjustment (Motor Amps/Inlet Density) to Add to the Suction/Throttle Setpoint to move away from surge. Every time the compressor surges, the controls make an incremental change until compressor surge no longer exists or the maximum amps or maximum Inlet Density is reached.	5%
Surge Alarm Option	Determines whether the PLC control system annunciates an alarm during ADAPTIVE CONTROL (Suction/Throttle). 1 = The PLC control system will automatically increment and reload during ADAPTIVE CONTROL and the PLC control system will indicate an alarm(alarm light will flash and horn will sound). 0 = the PLC control system will not indicate an alarm during surge as long as the adaptive control increments the minimum motor amperage setpoint. Once the maximum motor amperage/Inlet Density is reached, the adaptive control will no longer reset the unloading valve and the alarm will sound.	1
Suction Throttle Prop Band	These parameters are used to tune the Suction Throttle PID for both the Suction Throttle and Auto/Dual control modes to the enviromental and system demand.(configurable)	Set on Site

B6ET2E081

Service Setpoint Screen 1		
Parameter	Description	Setpoint
Inlet Valve Normal Startup/Shutdown Stroke Rate	This is the rate at which the Inlet valve is ramped during Startup and Shutdown (Which is a different rate than that used during normal system operation).	20 Seconds
Unloading Valve Normal Startup/Shutdown Stroke Rate	This is the rate at which the Unloading valve is ramped during Startup and Shutdown (Which is a different rate than that used during normal system operation).	20 Seconds
Suction/Throttle Kick-In Margin	This is the value that the Suction/Throttle PID controller uses to offset its setpoint from that of the Unloading Valve PID controller so that when the system is making pressure, the S/T CV (output) will decrease before the UVT CV does in order to reduce the setpoint to the IVT controller, thereby closing (throttling) the inlet valve.	0.21 Bar

Service Setpoint Screen 2		
Parameter	Description	Display
Total Compressor Run Time	A re-settable counter that totalizes the number of hours the compressor has actually been running (making air).	0 on initial start
Total Power On Time	A re-settable counter that totalizes the number of hours the PLC Panel has actually been powered up.	0 on initial start

Service Setpoint Screen 3		
Parameter	Description	Setpoint
Start AOP On Low Oil Pressure	Permits the AOP to start (with Alarm) when Main Oil Pressure falls below the alarm point.	No
Time Between Hot Motor Starts	Set According to motor manufacturers recommendations.	60 Minute

Analog Outputs Descriptions	FSE Abbr.	Open %		Option Enabled
		4 mA	20 mA	
Inlet Butterfly Valve I/P	IVT	0	100	No
Inlet Guide Vane I/P	IGV	0	100	Yes
Unloading Valve I/P	UVT	100	0	Yes

B6ET2E081

RTD Inputs	FSE Abbr.	Channel Enabled	EU Range		Units	Alarm & Trip Setpoints			
Description			Low	High		Lo-Lo	Low	High	Hi-Hi
Final Interstage Air Temperature	IAT	Yes	-50	150	°C	---	---	43.3	46.1
Inlet Oil temperature	IOT	Yes	-50	150	°C	---	21.1	57.2	60.0
Inboard Motor Bearing Temperature	IMT	No	-40	204	°C	---	---	---	---
Outboard Motor Bearing Temperature	OMT	No	-40	204	°C	---	---	---	---
Motor Stator Temerature 1	SMT	No	-40	204	°C	---	---	---	---
First Stage Discharge Temperature	FIT	No	-50	150	°C	---	---	---	---
Aftercooler Air Temperature	ACT	No	-50	150	°C	---	---	---	---
Inlet Air Temperature	ATT	No	-50	150	°C	---	---	---	---

Analog Inputs	FSE Abbr.	Channel Enabled	EU Range		Units	Alarm & Trip Setpoints			
Description			4 mA	20 mA		Lo-Lo	Low	High	Hi-Hi
Final Stage Discharge Pressure	DPT	Yes	0	13.79	Bar	---	---	---	---
System (Air) Pressure	SPT	Yes	0	13.79	Bar	---	---	---	---
Inlet Oil Pressure	OPT	Yes	0	6.897	Bar	0.90	1.10	---	47.52
Motor Amps	MAT	Yes	0	600	Amps	65.3	---	359.3	---
Low Speed X - Axis Pinion Vibration	LVT	Yes	0	101.6	um	---	---	22.86	30.48
High Speed X - Axis Pinion Vibration	HVT	Yes	0	101.6	um	---	---	22.86	30.48
First Stage Discharge Pressure	FDT	No	---	---	---	---	---	---	---
Second Stage Discharge Pressure	SDT	No	---	---	---	---	---	---	---
High Speed X - Axis Pinion Vibration	HVT-2	No	---	---	---	---	---	---	---
Vibration Input # 4	VIB4	No	---	---	---	---	---	---	---
Seal Air Pressure Transmitter	SAPT	Yes	0	1.034	Bar	---	0.17	---	---

UTILITY CONSUMPTION LIST

USER: SMART Modular Technologies **P.O. #: 4800023668**
LOCATION: Sao Paulo, Brazil **S.O. #: B6ET2E081**
PURCHASER: SMART Modular Technologies

WATER REQUIREMENTS:

Water inlet temperature 30 °C

	Water Required		Pressure Drop	
LP Intercooler	26.0	GPM (Note 4)	7.4	(PSI)
HP Intercooler	26.0	GPM (Note 4)	7.4	(PSI)
Aftercooler	26.0	GPM (Note 4)	7.4	(PSI)
Oil Cooler	24.0	GPM (Note 4)	0.36	(PSI)

ELECTRICAL REQUIREMENTS:

Main Motor	380/3/60	Volts/ph/Hz	335	Full Load Amps
Aux. Oil Pump Motor	380/3/60	Volts/ph/Hz	2.0	HP
Oil Reservoir Heater	380/3/60	Volts/ph/Hz	2500	Watts
Motor Starter Panel	380/3/60	Volts/ph/Hz	----	(Note 1)

AIR:

	Operating Flow Rates		Air Pressure Required
Compressor L7 Air Supply	20.0	SCFM	@ 70 to 120 PSI (Note 2)

Notes:
(1) 380 VAC +/- 10%, 60 HZ Isolated Power With Surge Protection Is Recommended.
(2) Clean Dry Air 5 Microns Or Better Is Required Ar -40°C Dewpoint.
(3) All Indicated Values Are For One Unit Only.
(4) FS-Elliott Minimum Cooling Water Quality Requirements:

Total Solids	100 to 200 ppm	[350 ppm max.]
pH Limits	6.0 to 8.0 preferred	[5.0 to 9.0 max.]
Total Hardness as (CaCo3)	< 100 ppm	[200 ppm max.]

TABLE OF CONTENTS

Customer Order Information
Limitations, Warranty and Safety
Equipment Data

CHAPTER 1 – GENERAL INFORMATION — PAGE NUMBER

INTRODUCTION 1-1
FACTORY TESTS 1-2
Setpoints 1-2
SHIPMENT 1-2
STORAGE 1-3
UNPACKING 1-3
LIFTING AND HANDLING 1-4
FIELD SERVICE ASSISTANCE 1-6
FACTORY REPAIR 1-6
PLANT AIR PACKAGE GENERAL DESCRIPTION 1-10
Lubrication System 1-10
Cooling Water 1-10
Motor Starter/Control Cabinet 1-10
Sound Pressure and Sound Power Levels 1-11
Control System 1-11

CHAPTER 2 – INSTALLATION

INTRODUCTION 2-1
FOUNDATION 2-2
MOUNTING ARRANGEMENT 2-2
PIPING 2-4
Inlet Air Piping 2-5
Air Discharge Piping 2-8
Cooling Water Piping 2-12
Intercooler Condensate Piping 2-13
Pulsar Drain Trap 2-14
Intercooler Drain Mufflers 2-19
CONTROL AIR SUPPLY 2-19
INLET CONTROL VALVE 2-20
INLET CONTROL VALVE (Compressors with Wye-Delta Starters) 2-20
OIL MIST ELIMINATOR 2-21
MISCELLANEOUS FIELD WIRING 2-21
COMPRESSOR DRIVE MOTOR 2-21
Motor 2-21
Motor Amp Transmitter (MAT) 2-22
Motor Starter and Control 2-22
AOP Starter Panel Grounding Bus (R200 Panel) 2-22
Low Voltage Panel (R1000 Panel) 2-22
Electric Motor Driven Oil Pump 2-22

CHAPTER 2 – INSTALLATION (continued)

PAGE NUMBER

CONTROL PANEL 2-23
Instrument Ground Bus 2-23
System Pressure Transmitter 2-23
LUBRICATION SYSTEM 2-23
SHAFT ALIGNMENT 2-24
Pre-Alignment Checks 2-26
Motor Magnetic Center 2-26
Distance Between Shaft Ends (BSE) 2-27
Reverse Indicator Method of Alignment 2-27
Constructing the Shaft Alignment Map 2-28
Alignment Procedure 2-28
Alignment Example 2-32
OFF DESIGN CONDITIONS 2-34
POWER REQUIREMENTS 2-35
POLARIS+ INSTALLATION/PRE-START CHECKLIST FORM FSE-6061-820A

CHAPTER 3 – OPERATION

PRINCIPLE OF OPERATION 3-1
SAFETY PRECAUTIONS 3-2
PREPARING FOR INITIAL START-UP 3-2
MANUAL START-UP VS. AUTOMATIC START-UP 3-3
MANUALLY INITIATED START-UP 3-3
OPERATIONAL CHECKS 3-7
AUTOMATICALLY INITIATED START-UP 3-7
SEAL AIR SYSTEM 3-11
EMERGENCY SHUTDOWN 3-11
MANUAL SHUTDOWN 3-13
AUTOMATIC SHUTDOWN 3-15
ACKNOWLEDGING ALARMS AND TRIPS 3-17
Alarms 3-17
Trips 3-18
SURGE DETECTION 3-18
INTEGRATED COMPRESSOR CONTROL STARTUP 3-19
NETWORK CONFIGURATION 3-19
SYSTEM CONFIGURATION 3-22
ICC START UP 3-24
OPERATING RECORD SHEET - ENGLISH 3-25
OPERATING RECORD SHEET - METRIC 3-25

CHAPTER 4 – MAINTENANCE

PAGE NUMBER

INTRODUCTION 4-1
SCHEDULED MAINTENANCE 4-1
OIL FILTER 4-3
OIL COOLER 4-4
Removal 4-4
Cleaning 4-4
Installation 4-4
INTERCOOLERS 4-5
Tube Bundle Removal 4-5
Cleaning 4-5
Inspection 4-6
Installation 4-6
VIBRATION PROBES 4-6
DISCHARGE CHECK VALVE 4-6
EXTENDED SHUTDOWN 4-7
Preparation and Maintenance for Extended Shutdown 4-7
Preparation for Re-Start After an Extended Shutdown 4-8
Extended Shutdown Checklist 4-9

CHAPTER 5 – LUBRICATION

INTRODUCTION 5-1
OIL REQUIREMENTS 5-2
PRIOR TO INITIAL OPERATION 5-2
LUBRICATION SYSTEM FLUSHING 5-2
Flushing Procedure 5-2
LUBRICATION SYSTEM COMPONENTS 5-4
Oil Reservoir 5-4
Pumps and Drivers 5-4
Oil Cooler 5-4
Oil Mist Eliminator 5-4
Oil Filter 5-5
Thermostatic Mixing Valve 5-5
Oil Reservoir Heater 5-5
Relief Valve (Auxiliary Oil Pump) 5-5
Relief Valve (Main Header) 5-6
Piping 5-6
Safety, Control and Monitoring Devices 5-6
Differential Oil Pressure Alarm (Optional) 5-7
PREPARING FOR INITIAL OPERATION 5-7

CHAPTER 6 – CONTROL SYSTEM PAGE NUMBER

INTRODUCTION 6-1
PRINCIPLE OF OPERATION 6-2
POWERING UP THE CONTROL PANEL 6-2
OPERATOR INTERFACE 6-3
- Home 6-5
- I/O Signals 6-6
- Settings 6-7
- History Trend 6-8
- Alarms/Trips 6-9
- Integrated Compressor Control 6-10
- Configuration 6-11
- Language and Units 6-12
- Security Screen 6-13
- Start/Stop 6-14
- Information 6-14

OPERATIONAL MODE SELECTION 6-15
- Energy Mode Selection 6-16
- Pressure Control Selection 6-17
- Start and Stop Modes 6-17

METHODS OF CONTROL 6-18
- Base Mode Control 6-18
- Suction Throttle Mode Control 6-18
- Ambient Compensation Control (ACC) 6-19
- System – Pressure Band Optimization (PBO) 6-21
- Auto Unload 6-22
- Start/Stop Mode – Manual/Manual 6-23
- Start/Stop Mode – Auto/Manual 6-23
- Start/Stop Mode – Auto/Auto 6-24
- Manual Unload Icon 6-25
- Integrated Compressor Control 6-25

COMPRESSOR CONTROL SETTINGS AND CONFIG. 6-26
- Discharge Pressure and Target 6-26
- System Pressure and Target 6-28
- ICC System Pressure and Target 6-29
- Auxiliary Oil Pump Settings 6-30
- Compressor Settings 6-31
- General Settings 6-32
- Hot Motor 6-32
- Auto Unload 6-32
- Surge Line Calculations 6-33
- Surge Detection 6-34
- Fast Surge Recovery (Minor Surge) 6-34
- Major Surge Recovery 6-35
- ICC Master Control Settings Screen 1 6-35
- ICC Master Control Settings Screen 2 6-35
- ICC Slave Control Settings Screen 6-36
- Compressor Configuration 6-36
- Valve Mode of Operation 6-37

CHAPTER 6 – CONTROL SYSTEM (continued)

PAGE NUMBER

Valve Tuning 6-39
Timer Settings 6-40
R1000 I/O SIGNALS 6-42
R1000 GENERAL INFORMATION 6-51
R1000 LOGIN INFORMATION 6-57
R1000 MODBUS PROTOCOL

CHAPTER 7 – TROUBLESHOOTING

INTRODUCTION 7-1

CHAPTER 8 – ACCESSORIES

INTRODUCTION 8-1
FS-ELLIOTT MOTOR STARTER ENCLOSURE SET POINT GUIDELINES (WYE-DELTA STARTERS) 8-1
FS-ELLIOTT MOTOR STARTER ENCLOSURE SET POINT GUIDELINES (SOLID STATE STARTERS) 8-2
ACCESSORY LIST 8-5

CHAPTER 9 – SALES/SERVICE/PARTS

INTRODUCTION 9-1
FIELD SERVICE ASSISTANCE 9-1
SPARE PARTS LIST 9-2
Ordering 9-2
Storage 9-2
Returning Parts to the Factory 9-3
FIGURES (if applicable) 9-3
APPENDIX A – NORMAL MAINTENANCE PARTS LIST
APPENDIX B – NORMAL MAINTENANCE PARTS FIGURES

CHAPTER 10 – TECHNICAL DRAWINGS

INTRODUCTION 10-1
NOMENCLATURE AND USE OF ASSEMBLY DRAWINGS 10-1
DRAWING LIST 10-3

LIST OF FIGURES

FIGURE NUMBER	DESCRIPTION	PAGE NUMBER
1-1	Suggested Overhead Lifting Arrangement	1-7
1-2	Suggested Forklift Arrangement	1-8
1-3	Suggested Lifting Arrangement of Sound Enclosure	1-9
2-0	Mounting Pad	2-3
2-1	Compressor Inlet Air Piping	2-7
2-2	Discharge Air Piping	2-9
2-3	Air Discharge Check Valve	2-11
2-4	Intercooler Drain Valve	2-13
2-5	Pulsar Drain Trap	2-14
2-6	Compressor & Cooling Water Piping	2-17
2-7	Compressor Drain Piping	2-18
2-8	Types of Misalignment	2-25
2-9	Collinear Aligned Shafts	2-25
2-10	Distance Between Shaft Ends	2-27
2-11	Reverse Indicator Readings	2-29
2-12	Plotting Alignment Values on Map	2-30
2-13	Dial Indicator Locations	2-31
2-14	Dual Gage Dial Indicator	2-32
2-15	Shaft Alignment Example	2-37
2-16	Shaft Alignment Map	2-38
3-1	Compressor System, Block Diagram	3-2
3-2	Energy Mode Screen	3-4
3-3	Reference – Start Sequence	3-5
3-4	AOP On – Wait, Cold Oil	3-6
3-5	Control Mode Screen	3-8
3-6	Waiting to Auto Start	3-9
3-7	AOP On – Wait, Cold Oil	3-10
3-8	Active Alarms and Trips	3-12
3-9	Coastdown	3-12
3-10	Reference – Stop Sequence	3-13
3-11	Cooldown	3-14
3-12	Control Modes – Start/Stop Mode	3-15
3-13	Waiting to Auto Start	3-17
3-14	Active Alarms and Trips	3-17
3-15	Active Alarms and Trips	3-18

LIST OF FIGURES
(continued)

FIGURE NUMBER	DESCRIPTION	PAGE NUMBER
6-1	General Control Block Diagram	6-1
6-2	Status/Home Screen	6-3
6-3	Status Screen – Discharge Pressure Control	6-5
6-4	No Signal Screen – Analog Signals	6-6
6-5	Settings	6-7
6-6	History Trend Screen	6-8
6-7	Alarms/Trips Screen	6-9
6-8	Integrated Compressor Control – Home Screen	6-10
6-9	Configuration – Home Screen	6-11
6-10	Language and Units Selection Screen	6-12
6-11	Security Screen	6-13
6-12	Information Screen	6-14
6-13	Energy Mode Selection	6-15
6-14	Control Mode Screen	6-15
6-15	Control Mode Selection	6-16
6-16	Pressure Control Selection	6-17
6-17	Start/Stop Mode Selection	6-17
6-18	Mode Selection Screen – Base Mode	6-18
6-19	Mode Selection Screen – Suction Throttle Mode	6-19
6-20	Mode Selection – Ambient Compensation Control	6-20
6-21	Mode Selection – Pressure Band Optimization	6-21
6-22	Mode Selection Screen – Auto Unload	6-22
6-23	Mode Selection Screen – Manual/Manual	6-23
6-24	Mode Selection Screen – Auto/Manual	6-24
6-25	Mode Selection Screen – Auto/Auto	6-25
6-26	Home Screen – Discharge Pressure Control	6-26
6-27	Home Screen – System Pressure Control	6-27
6-28	Auxiliary Oil Pump Screen	6-28
6-29	Configuration Screen	6-33
6-30	Valve Control – Manual Mode	6-34
6-31	Analog I/O Screen	6-39
6-32	Analog Configuration Screen	6-40
6-33	Analog Alarm/Trip Configuration Screen	6-41
6-34	Digital Input Test Screen	6-44
6-35	Digital Input Configuration Screen	6-45
6-36	Digital Output Screen	6-46
6-37	Digital Output Configuration Screen	6-47
6-38	Compressor Information Screen	6-48
6-39	Compressor Information Screen	6-49
6-40	History Download Complete	6-50
6-41	Save Configuration	6-51
6-42	Change Date and Time	6-52
6-43	Test Lamp Screen	6-52
6-44	Communication Setup Screen	6-53
6-45	Modbus Communication Settings Screen	6-53
6-46	Ethernet Communication Setup Screen	6-54

LIST OF FIGURES
(continued)

FIGURE NUMBER	DESCRIPTION	PAGE NUMBER
8-1	Wye-Delta Starter/Control Panel	8-2
8-2	Solid State Starter/Control Panel	8-3
	Chapter 9 Appendix B-Normal Maintenance Parts Figures	
9-1	Compressor Backside View	C9 App B-2
9-2	Compressor Front View	C9 App B-3
9-3	Compressor Top View	C9 App B-4
9-4	Airhead Components	C9 App B-5
9-5	Intercoolers and Aftercooler	C9 App B-6
9-6	Low Voltage Starter	C9 App B-7
9-7	R150 Control Panel	C9 App B-8
9-8	R200 Control Panel	C9 App B-9
9-9	R1000 Control Panel	C9 App B-10

LIST OF TABLES

TABLE NUMBER	DESCRIPTION	PAGE NUMBER
1-1	Shipping Preparations	1-2
2-1	Air Piping Forces & Moments	2-4
2-2	Compressor Air & Water Connection Sizes	2-5
2-3	Cold Alignment Setting	2-26
4-1	Scheduled Maintenance Guidelines	4-2
5-1	Guidelines for Selecting Lubricating Oils	5-6
5-2	Lubrication System Control Panel Operating Data	5-9
6-1	Analog I/O Descriptions	6-43
6-2	Digital Input Descriptions	6-46
6-3	Digital Output Descriptions	6-47
7-1	Troubleshooting Guide	7-1

INTRODUCTION

This technical manual supplies information for the installation, operation, and maintenance for your FS-Elliott equipment. To avoid operational and maintenance difficulties, special attention should be given to the precautionary instructions emphasized throughout the manual.

Table of Contents – contains Customer's Order Information, Equipment Data and Limitations, Warranty and Safety.

Chapter 1 – General Information – provides a description of the equipment and procedures for unpacking, handling and storage.

Chapter 2 – Installation – discusses the basic foundation requirements along with the alignment procedures, piping recommendations and other installation details.

Chapter 3 – Operation – provides equipment guidelines for start-up and shutdown procedures including recommended safety precautions to observe during operation.

Chapter 4 – Maintenance – supplies a recommended routine maintenance schedule along with disassembly, assembly and adjustment procedures.

Chapter 5 – Lubrication – describes the lubrication system, the oil requirements and gives consideration to the care of the lubricating oil.

Chapter 6 – Control System – furnishes information required for operating, adjusting and maintaining the control system.

Chapter 7 – Troubleshooting – provides probable causes of problems and the necessary corrective actions.

Chapter 8 – Motor and Motor Starter information.

Chapter 9 – Service/Parts/Sales – provides the Normal Maintenance Parts List, information on how to order parts and where to obtain service assistance and training for operators and maintenance personnel.

Chapter 10 – Technical Drawings – contains specific drawings for your equipment. The drawing numbers may have a suffix number, or group number identifying the applicable assembly on the drawing. Be sure to use the suffix listed when making reference to a drawing.

FACTORY TESTS

FS-Elliott provides—as standard—a performance and mechanical test on all air ends. Also, a functional test of the Control Panel is completed. The unit is assembled prior to shipment. When required, a complete performance and mechanical test of the compressor with the contract motor, intercoolers and lubrication system can be performed.

Setpoints

The setpoints for the air compressor units are entered at the FS-Elliott factory. These setpoints are shown on Configuration Sheet located in the Equipment Data section of this manual. The control modes, transmitters and options are also shown on Configuration Sheet.

Note

The Control Panel Configuration Sheet does not indicate FS-Elliott's scope of supply. Transmitters, pushbuttons, and pressure switches may be customer supplied or FS-Elliott supplied. Refer to the purchase order.

SHIPMENT

Polaris® Compressors are mounted on cribbing and wrapped in plastic prior to shipment. Overseas units are placed into shipping containers while domestic units are shipped directly on a flat bed truck covered with tarps. Care needs to be taken to avoid rough handling during container or domestic shipments. Rust preventative is applied to all exterior unpainted surfaces to prevent corrosion during shipment and storage. Compressors intended for long-term storage are fully enclosed in water-resistant wooden boxes with sufficient bracing for protection during overseas travel.

Note

Due to shipping restrictions, some items may be packaged separately. Refer to packing list enclosed with your shipment.

TABLE 1-1 SHIPPING PREPARATIONS

Package	A	B	C
Cooler Drying	X	X	X
Oil Treatment (liquid oil and fogging)	X	X	X
Airside / Cooler Isolation	X	X	X
Cooler Waterside Preservation		X	X
Airside Fogging	X	X	X
Exposed Metal Protection	X	X	X
Unit Wrap	Stretch Wrap	VCI	VCI
Export Boxing			X
Storage Application	6 months indoor	12 months indoor or 6 months outdoor	18 months indoor or 12 months outdoor

STORAGE

Store the compressor indoors whenever possible. Keep the storage area clean, dry and free from temperature extremes. The compressor should also be tarped if possible. A rust preventative is applied to the compressor before shipment. The protective effectiveness of the rust preventative is significantly reduced by conditions encountered during outdoor storage. Storing the compressor outdoors often subjects it to extreme temperature changes, excessive moisture and, in some instances, salt-laden air. Precautions must be taken to avoid these extreme conditions during storage.

There are three classes of shipping preparations used to preserve and protect the compressor during storage. Table 1-1 shows the levels of protection for each class. The package used on your compressor is shown on the General Data sheet, located in the Equipment Data section of this manual. These protective measures are effective for a limited amount of time. Once the seal has been broken and the compressor has been installed, additional measures must be taken.

Caution

Failure to provide proper storage or exceeding the storage duration can void your warranty.

UNPACKING

Remove the crating and account for all items on the packing list. Make sure there are no missing or damaged parts. Handle all parts carefully. If the equipment was damaged during shipment, contact the carrier and file a damage claim immediately. If items are missing, contact the nearest distributor or the nearest FS-Elliott office.

If airside/cooler isolation was specified for the unit (package A, B or C), it must be removed during the equipment commissioning. Removal of this protection should be avoided until the unit is installed on its base and ready to be commissioned. The corrosion-prohibitive sheeting is installed at the inlet and discharge to each stage of the compressor. To remove, ensure that the interstage pipe is properly supported and remove the Victaulic coupling. Slide the rubber gasket aside and remove the protective sheeting. Ensure that no foreign material enters the compressor. Replace the rubber gasket and reinstall the Victaulic coupling. Repeat for all stages.

Note

Lifting and rigging may be required to support the interstage piping during isolation sheeting removal.

Once the unit is unpacked, the factory shipping protection is no longer effective. If the equipment will not be commissioned within 1 month of unpacking, further precautions must be taken. Contact FS-Elliott or your local distributor for further instructions for long-term storage of the equipment.

LIFTING AND HANDLING

The FS-Elliott Polaris 300 compressor can be moved by either using a forklift or overhead hoist. Lifting and handling of the compressor must be planned around facilities available at the installation site.

The baseplate boxbeams are to be used for forklifts from the baseplate casting side. Care should be taken so that the compressor is not damaged. Lifting lugs and/or holes are provided on the compressor baseplate for attachment to lifting cables. Caution must be taken when lifting to make certain that cables or any other parts of the lifting apparatus do not come in contact with any components on the compressor. Spreader bars or a lifting rig are normally required to prevent this.

WARNING

Do not lift the unit by lifting eyes or similar provisions provided on various package components. These are only suitable for lifting the individual components.

Actual weights of the "as shipped" compressor are shown on the shipping documents. Select crane capacities and lifting accessories accordingly.

Preparation and Maintenance for Extended Storage

An indoor, climate-controlled environment is the preferred storage location for protection of the compressor package. However, if these conditions are not available, the following guidelines should be followed as a minimum:

1. All compressors, no matter where they are stored, must be cleared of all residual water from the air and cooling water systems. FS-Elliott performs this function after testing of the compressors and the Purchaser and/or End-User is responsible for this task from when the unit arrives on site.

2. If the compressor will be idle for an extended period of time, it is necessary to connect a source of dry (dewpoint of -40°F or lower), low-pressure nitrogen to the compressor discharge. Blind flanges should be installed at the compressor inlet and discharge, and the Seal Air Back Pressure Relief Valve should be removed and its header connection plugged. Remove the Oil Mist Eliminator, and cap the pipe connection. The nitrogen supply may be connected as either a continuous purge, or intermittently to circulate through the compressor for at least 24 hours every 3 to 5 days, depending on local atmospheric conditions. If being purged continuously, it is recommended that a pressure of 4.5 psig (0.31 barg) be maintained.

WARNING

Nitrogen gas can slowly leak past the gaskets and seals of the compressor to the surroundings. All government and plant regulations pertaining to harmful gases should be considered before applying a nitrogen purge.

If nitrogen is not readily available, dry (dewpoint of -40°F or lower), warm, low-pressure air may be connected to the compressor discharge. This may also be used as either a continuous or intermittent purge. The compressor should be prepared as in the previous paragraph, and it is recommended that a pressure of 4.5 psig (0.31) be maintained for a continuous purge.

Finally, for moisture control in the air-side (gas-side) piping, FS-Elliott installs a desiccant capsule in the inlet and discharge piping of the compressor. These capsules should be replaced every 6 months.

3. The mechanical components of the compressor gear case (bearings, pinion, bull gear) must be sprayed with oil spray every 1-2 months (depending on the storage environment). This can be done manually by spraying the pinion, bull gear, and bearings through the removable plug installed on top of the gear case. Alternately, the auxiliary oil pump may be operated for 5 minutes every 1-2 months, depending on the storage environment. Use the same oil that will be used in the oil reservoir.

WARNING

The auxiliary oil pump should not be operated for more than 5 minutes without a seal air supply. Failure to heed this warning may result in leakage of oil to the air-side of the compressor.

While the compressor is sprayed with oil, rotate the compressor and driver shafts so that the bearings, pinion, and bull gear are thoroughly coated with oil.

A log should be maintained for verification that this treatment has been completed every 1-2 months.

4. It is recommended that the motor space heaters be turned on for the duration of the storage period. If equipped with stator RTDs, proper operation of the heaters should be confirmed weekly with temperature measurements.

Preparation for Commission after an Extended Storage

1. Disconnect and remove nitrogen / dry air purge system (if used). Re-install the Seal Air Back Pressure Relief Valve, and Oil Mist Eliminator.

2. Remove the blind flanges from the compressor inlet and discharge. Visually inspect the compressor casing and impeller for corrosion.

3. Remove desiccant capsules from the inlet and discharge air piping.

4. There is concern that moisture may have entered the oil system. If the unit was stored with oil in the reservoir, obtain a sample from the oil reservoir drain point and driver bearings for analysis. Depending on the results of the oil analyses, it may be necessary to drain, and flush the oil system prior to commissioning.

5. For moisture control inside the control panel (or compressor terminal box), FS-Elliott installs a desiccant capsule prior to shipment. However, to ensure that all moisture is removed, install a 100 watt light bulb in the control panel (or compressor terminal box). Energize the light bulb but do not energize the control panel (or compressor terminal box). Allow the light bulb to warm the panel components for at least 72 hours to “dry-out” any moisture on the electronic components.

6. If they are not already energized, energize the motor space heaters. Be sure to megger the motor windings to ensure that the windings are “dry” before operating the motor.

FIELD SERVICE ASSISTANCE

Your local FS-Elliott Service Distributor is trained and authorized to meet your service needs. Distributor service is locally available for installation, start-up, operation, and maintenance requirements. Service contracts and parts are available locally through your FS-Elliott Distributor. FS-Elliott Co., LLC, also provides a full service operation that meets all of your service needs. Field Service Representatives are available to oversee the installation and start-up or any phase of maintenance of FS-Elliott equipment. Also, Field Service Engineers are available to conduct Performance Analysis and other related equipment evaluations. For the location of an FS-Elliott Service office near you, refer to the website www.fs-elliott.com.
.

FACTORY REPAIR

Major repair and rebuilding of equipment can be done in the FS-Elliott factory or in authorized repair shops around the world. Contact the nearest FS-Elliott office for details.

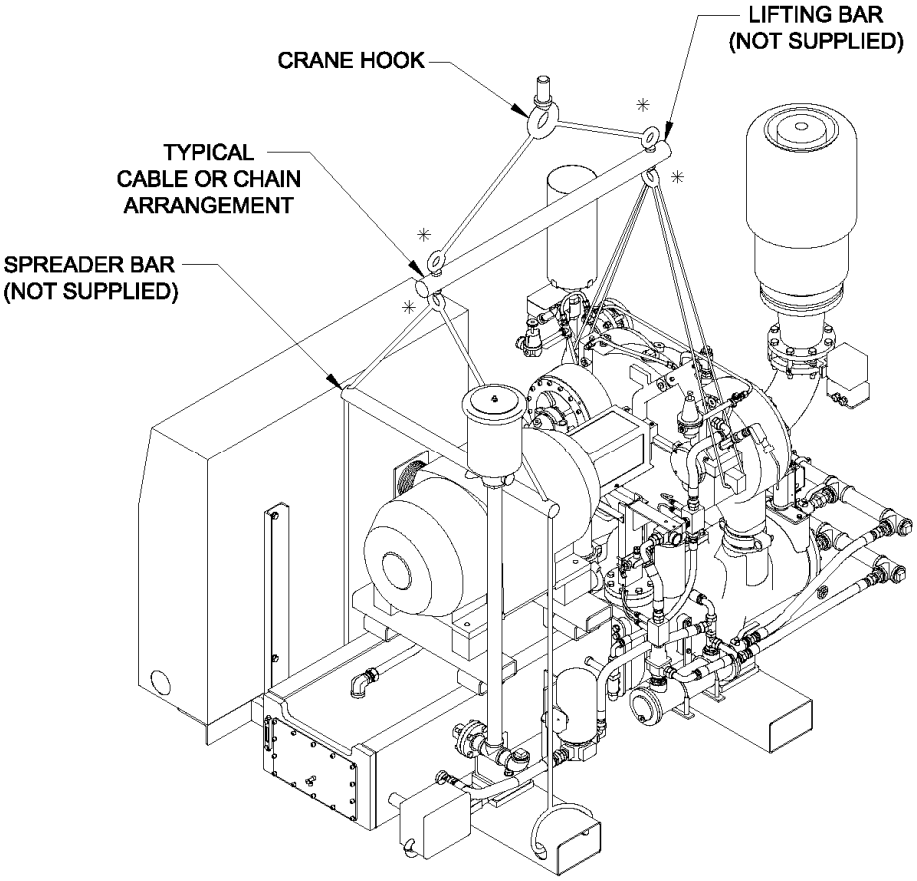

FIGURE 1-1
SUGGESTED OVERHEAD LIFTING ARRANGEMENT

Polaris 300 compressor units have four (4) lifting points as shown in Figure 1-1. Do not attempt to lift unit with any other procedures or points than those specified in Figure 1-1 or the use of a forklift in Figure 1-2. A safety hazard or unit damage may otherwise result.

Adjust length of cables so crane hook is positioned above center of gravity of compressor to insure compressor remains level while lifting.

Spreader bars must be sufficiently strong to resist all buckling loads.

Secure cables at points indicated by * to prevent movement while lifting.

During lifting operation do not touch piping and/or any other component with lifting cables/chains.

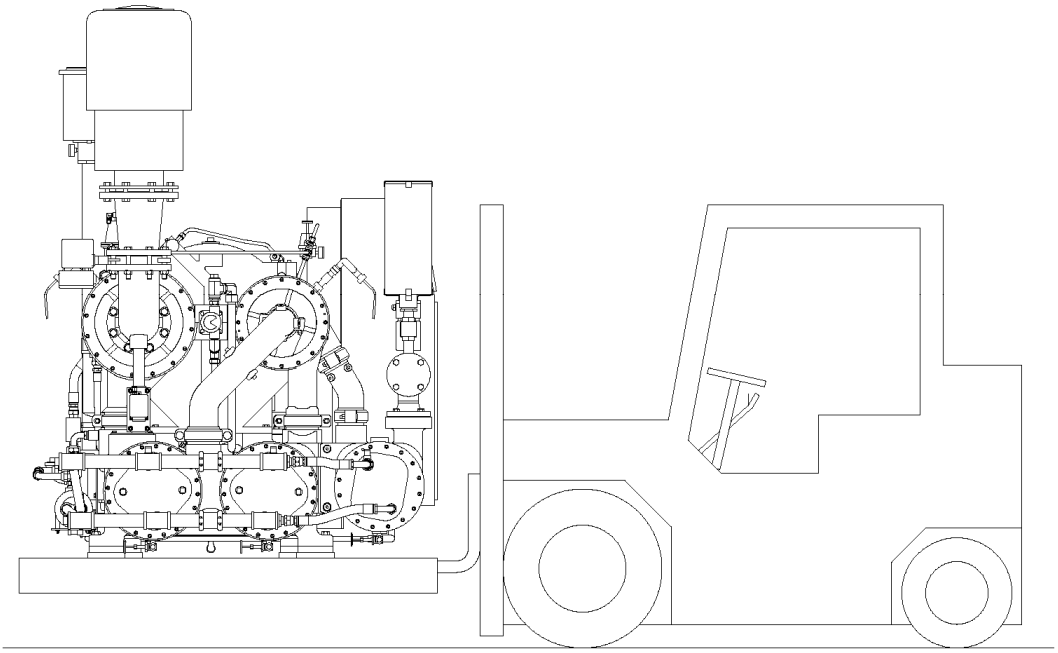

FIGURE 1-2
SUGGESTED FORKLIFT ARRANGEMENT

A forklift can be used by inserting the forks into the box beams under the baseplate as shown in Figure 1-2. Do not attempt to lift the unit with forks in any other orientation. A safety hazard or unit damage may otherwise result.

CAUTION
Care should be taken so that the forklift does not damage the compressor.

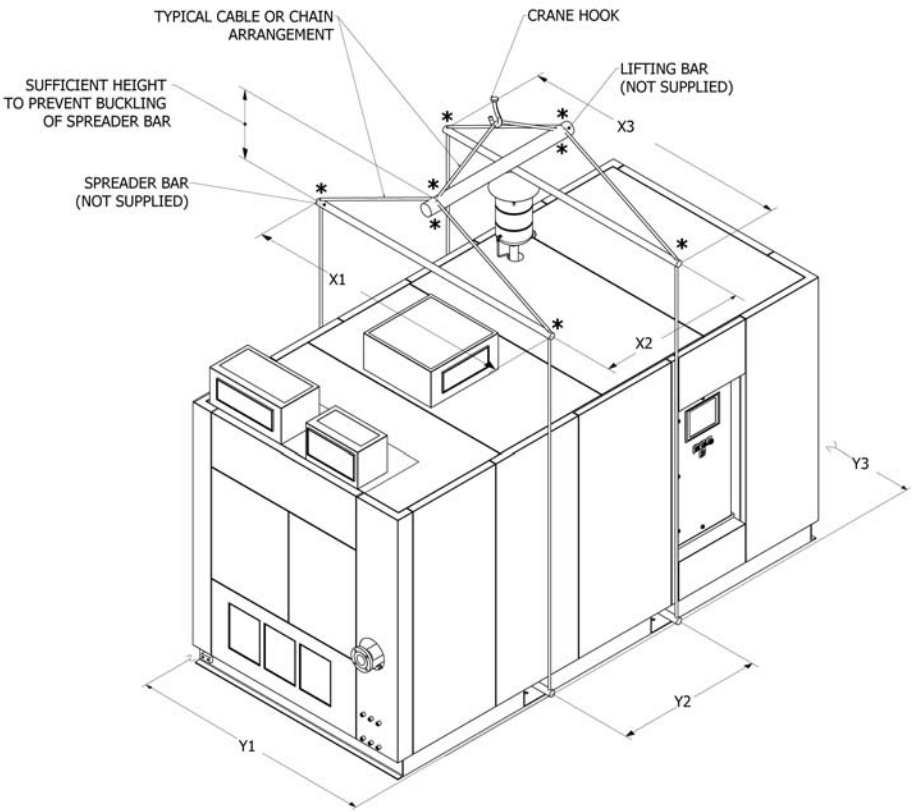

FIGURE 1-3
SUGGESTED LIFTING ARRANGEMENT OF SOUND ENCLOSURE

Compressor units have two (2) box beams accessible to spreader bars as shown in Figure 1-3. Do not attempt to lift unit with any other points than those specified in the figure. A safety hazard or unit damage may otherwise result.

Adjust length of cables so crane hook is positioned above center of gravity of compressor to ensure compressor remains level while lifting.

Dimensions X1, X2, and X3 should be equal to dimensions Y1, Y2, and Y3 respectively to maintain stability while lifting.

Spreader bars must be sufficiently strong to resist all buckling loads.

Secure cables to points indicated by * to prevent movement while lifting.

During lifting operation do not touch sound enclosure walls or any other component with lifting cables/chains.

PLANT AIR PACKAGE GENERAL DESCRIPTION

The Polaris 300 is a three stage centrifugal compressor. The first stage impeller is mounted on the low speed pinion; the second and third stage impellers are mounted at opposite ends of the high-speed pinion. The impellers are housed in scroll type casings.

Both pinions are driven by one gear. The gear and pinions are helix design and are housed in a horizontally split gear case. The pinions are supported radially by tilting or flex pad journal bearings. The gear is supported radially by sleeve type bearings. Machined shoulders and collars on the pinion and gear shafts bear against vertical babbitted surfaces on the journal bearing retainers, absorbing axial rotor thrust.

Horizontally-split carbon seal assemblies prevent air leakage along the pinion shafts into the gear case and oil leakage along the pinion shafts from the gear case. A spring-backed, radial-type oil seal prevents oil leakage from the gear case along the gear shaft.

The Polaris 300 Compressor base supports the compressor components and houses the intercoolers, aftercooler, and oil reservoir. The two boxbeams support the base and oil reservoir. The lubrication system components are located at the sides of the base and oil reservoir.

Lubrication System

The lubrication system consists of a main oil pump, auxiliary oil pump, oil filter, oil cooler, oil pressure control valve, pressure and temperature indicating devices, a reservoir, thermostatic mixing valve, oil reservoir heater (optional) and necessary piping, fittings and valves. See Chapter 5, Lubrication System, for details.

Cooling Water

Cooling water maintains air and lubrication oil temperatures within design limits. The air coolers and oil cooler are shell and finned tube type.

Motor Starter / Control Cabinet

The motor starter enclosure contains the wye-delta or solid-state motor starter contacts. The low voltage panel contains the auxiliary oil pump motor starter and control power transformer.

The control cabinet contains the electronic circuitry that controls the compressor's operation.

Sound Pressure and Sound Power Levels

The following table lists the emission sound pressure and sound power levels expected for a standard FS-Elliott compressor at design conditions. Emission sound pressure level and/or sound intensity measurements are taken while the equipment is operating at a standard rated flow, pressure, and power.

FRAME SIZE	ACOUSTIC TREATMENT	EXPECTED SOUND PRESSURE (dBA)	EXPECTED SOUND POWER (dBA)
P300	Without Sound Enclosure	83	100
	With Sound Enclosure	78	95

Control System

The control system regulates the airflow through the compressor by positioning the air inlet control valve and the unloading valve. The controls also unload the compressor when surge occurs. The control system performs the following functions:

1. Starts/stops the air compressor unit
2. Motor amperage control
3. Discharge pressure control
4. Suction throttling control
5. Intermittent mode control
6. Auto dual mode control
7. Auto start stop control
8. Surge protection
9. Alarm and trip indication
10. Data storage

INTRODUCTION

Proper installation will contribute to trouble free operation with minimum maintenance. This section includes detailed procedures for ensuring a successful installation. The instructions in this section, along with the sketches, should be thoroughly understood before installing the Polaris P300 Compressor.

Successful installation requires specialized knowledge and skills. For this reason it is recommended that an authorized FS-Elliott Service Representative be retained to supervise the installation and initial startup. Installation site conditions vary greatly and may make it necessary to deviate from the procedures in this manual. Do not deviate without a service representative who can suggest alternate procedures to better suit specific field or service conditions and provide the best possible installation. Regardless of the procedure, quality materials and workmanship are an absolute necessity for a successful installation.

CAUTION

Welding on the compressor package is normally not required for installation; however, if electric welding is required, alternating current should be used. Use of direct current may result in residual magnetism that could cause damage such as frosting of the bearings or may affect electrical runout. Additionally when welding, the electrical ground should be positioned as close as possible to the weld area. Minimize welding in the vicinity of the control panel on compressors equipped with digital type control systems.

SOUND CONTROL

It is recommended that the practices below be followed in order to control the noise from the air compressor package. When a noise level is expected or guaranteed, these practices must be followed in order to ensure the anticipated noise level.

1. The layout of the compressor room is important for controlling the noise level. Consideration must be given to the reflective walls, ceiling, and floor. These surfaces should be treated with acoustic absorption material. Also, other equipment in the compressor room will likely raise the overall noise level. Consideration must be given to the positioning of the equipment and the treatment of acoustic absorption material on or around the equipment. It should be noted that a near “free field” environment is required in order to achieve the expected noise level.

2. The inlet air filter assembly and blow-off silencer should be mounted outside and away from plant personnel, such as on the roof or another remote location. The air filter and silencer should be mounted away from walls and other equipment to prevent the reflection of the noise. The exhaust from the silencer should be directed upward and equipped with a rain cap for protection from the weather.

3. The condensate drains from the intercooler and aftercooler drains should be piped to an enclosed or silenced sump.

4. All of the inlet, discharge, and blow-off piping and valves should be treated with acoustic insulation and metal lagging.

The proper pipe sizes should be used. The inlet air piping should be the same diameter as the compressor inlet or larger. If there is a long distance between the inlet air filter and the compressor, the pipe diameter should equal the outlet diameter of the inlet air filter. The discharge air piping should be the same diameter as the compressor discharge or larger. The IN and OUT connections of the unloading valve should be fitted with gradual transition pipes. The piping downstream of the silencer should be the same diameter as the outlet connection of the silencer.

FOUNDATION

The principle function of the foundation is to provide a permanently rigid, non-warping support for the compressor. Proper fulfillment will, (1) hold equipment in proper alignment under all operating conditions, (2) support the machine's weight and load, and distribute it uniformly and evenly to the soil or main support structure, (3) maintain established equipment locations, and (4) minimize transmission of vibration to or from the machines.

While the responsibility for supplying an ample foundation rests with the purchaser, the following recommendations should be considered:

1. The outline drawing provides equipment mounting surface areas, equipment weight, main piping connections, and other information necessary in designing a foundation. (Refer to Chapter 10 – Technical Drawings)
2. A foundation of reinforced concrete should be of ample size and proportion for adequate support of the machinery.
3. Provision should be made in the foundation design for accessibility to all parts of the machine or its auxiliaries during operation, inspection and maintenance.
4. The foundation should rest entirely on natural rock or entirely on solid earth. A foundation resting partly on one and partly on another may warp due to settling of part of the foundation support. Distortion may also occur due to unequal pressures created by differences in ground water level.
5. Foundations supported on pilings should have a rigid continuous cap over pilings on which the foundation rests.
6. Temperature surrounding the foundation should be uniform. Temperature differences between the top slab and mat, for instance, can create substantial bending stresses in columns. Care must be taken to reduce thermal distortion from radiation or uneven heating and cooling. Direct sunlight on outdoor tropical installations is to be avoided. Steam lines passing close to the foundation should also be avoided; but when unavoidable, lines should be insulated and the foundation shielded.
7. Foundation should be isolated from all other structures and arranged so that outside vibrations are not transmitted to it. Where foundations must be supported by floor beams, a vibration dampening material should be installed between the beams and the foundation.
8. Design of foundation structure should avoid resonant frequencies at driver speed.
9. It is recommended that concrete foundations be allowed to cure for approximately 28 days before loading. This will allow for development of strength and reduction in shrinkage rate. Curing procedure should be in accordance with American Concrete Institute recommendations.

MOUNTING ARRANGEMENT

The Polaris P300 Compressor models covered by this manual are designed to be placed directly upon a flat, level surface of sufficient strength to support the compressor package.

Adjustable Mounting Pads

Optional jackpads are available for setting the compressor on the foundation. The mounting pads are specially designed vibration isolating pads having vertical adjustment provisions (refer to Figure 2.0). The pads are positioned at the end of each box beam.

Leveling of the compressor is accomplished by using any machined baseplate surface, such as the baseplate top for a reference and adjusting the nuts under the baseplate beam to level the unit. Final adjustment for level is maintained by tightening the locknuts and washers against the top of the baseplate pads. After completing this, the compressor and driver are ready for final alignment.

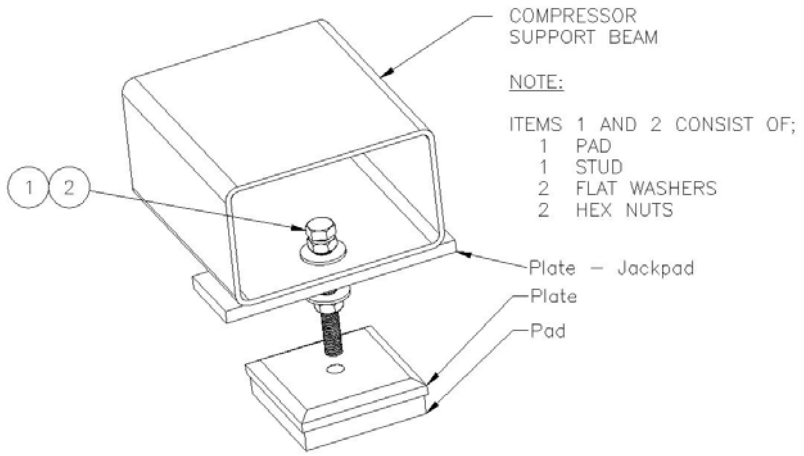

Figure 2-0
Mounting Pad

PIPING

Piping system design and fabrication is the responsibility of the customer. FS-Elliott does not assume any responsibility for the piping system design or fabrication. However, the following sections are offered as guidelines. This information is based on good engineering practice and experience on a wide variety of installations.

It is recommended that the piping system design be done by specialists experienced with piping design for centrifugal compressor installations. As an alternate, reference should be made to a current reference such as CAGI Compressed Air and Gas Handbook section on dynamic compressors.

All piping connected to the compressor must be properly supported, aligned and anchored to avoid strains on the compressor. Do not use the compressor for anchoring or supporting any attached piping except for control piping or tubing. The resultant forces and moments due to air piping weight, thermal growth and reactions due to pressure variations must not exceed the limits for the compressor inlet and discharge connections as shown in Table 2-1.

Table 2-1
Air Piping Forces & Moments

		Inlet	Discharge
Maximum Force	Vertical Horizontal	100 lb (445 N) 150 lb (670 N)	150 lb (670 N) 150 lb (670 N)
Maximum Moments		750 in. lb (85 N m)	750 in. lb (85 N m)

Piping flange boltholes must be precisely aligned to eliminate the buildup of torque when pulled together with flange bolts. Adjoining flange faces must be parallel to each other.

It should be possible to support and anchor the air piping and components so as not to exceed the allowable forces and moments without the use of expansion joints; however, an expansion joint is recommended to meet the limits shown in Table 2-1. Liners should be used with expansion joints to minimize noise, flow disturbance and piping excitations created by the convolutions. Dual tie rods are recommended. The expansion joint manufacturer's selection and installation guidelines must be followed.

CAUTION

Piping strains imposed on a compressor may cause misalignment of critical components resulting in damage to the compressor.

It is essential that all piping be thoroughly cleaned of dirt, weld slag, mill scale or other foreign material before making final connections to the compressor. All protective flange covers and plugs installed on the compressor for shipment should remain in place until necessary to remove when making the connections to the compressor.

Inlet Air Piping

Normally, the inlet air filter is provided by FS-Elliott and is connected directly to the compressor's inlet pipe. If this is done, then no additional work is required.

Note

Inlet air piping is not required for compressors provided with sound enclosure option. Air filter is integral to sound enclosure.

CAUTION

To conform to CE standards, the compressor should run with the sound enclosure side panels in place.

For certain installations the customer might find it necessary to mount the inlet air filter outdoors and/or on the roof. If this is required, then the following should be considered:

Inlet piping must be constructed of corrosion resistant materials or protected with a suitable internal coating to prevent the possibility of impeller erosion or other damage caused by the ingestion of rust particles. Suggested materials are stainless steel, aluminum or rigid plastic.

The minimum inlet pipe diameter should be equivalent to or larger than the compressor inlet connection size as shown in Table 2-2. Use gradual transition pipe sections when changing diameters to minimize pressure drop and flow disturbance.

Table 2-2
Compressor Air & Water Connection Sizes
Refer to Unit Outline in Chapter 10 – Technical Drawings

Compressor Model	Air Inlet Flange Connection	Air Discharge Flange Conn.	Water Manifold Inlet Conn.	Water Manifold Outlet Conn.
Polaris P300	8" - 150# RF	3" - 150# RF	2" - 150# RF	2" - 150# RF

The compressor inlet air piping must be rated for vacuum pressure of 1.0 psia (0.07 bar). Fabricated sheet metal ducts are not recommended for this service because the ducts are susceptible to collapse under the low-pressure conditions that may be experienced during operation.

The expected clean inlet air system pressure drop is about 5.0 inches (12.7 cm) of water total for the inlet filter and all piping between the filter and compressor inlet. To meet these values, the inlet piping system should be as short as possible and designed with a minimum number of bends and fittings. Pressure drops exceeding these values will possibly affect the compressor performance. The design should also incorporate a sufficient number of flanges for ease of inspection and cleaning. Mating flange faces must be parallel and boltholes must be precisely aligned.

Short radius or mitered elbows should not be used for any location in the inlet piping system due to high-pressure drops and potential flow disturbance that may affect compressor performance.

Condensate may collect in air piping at most installation sites; therefore, slope all horizontal piping runs away from the compressor to prevent condensate draining back into the compressor. Install valved drains in the low points of the piping to remove the condensate.

Inlet piping may be lagged to attenuate airborne and structure borne noise. Many commercial pipe coverings are available for this purpose. Lagging, if installed, must be arranged to permit accessibility to instrumentation installed in the inlet air pipe.

A conical metal screen may be installed temporarily in the air piping near the compressor for added assurance of system cleanliness. It should be removed when it has been determined that the system is clean.

Install the inlet air filter provided by FS-Elliott with the inlet opening(s) located at least 6 feet (2m) above roof or floor surfaces to minimize the entrance of debris. Locate the filter so that the discharge from vents, pipes, stacks, cooling towers, etc., is prevented from entering the compressor. Some of these discharged gases may form corrosive fluids when in contact with moisture in the air and could damage the compressor internals and air piping system. Outdoor locations subject to windy conditions should be avoided.

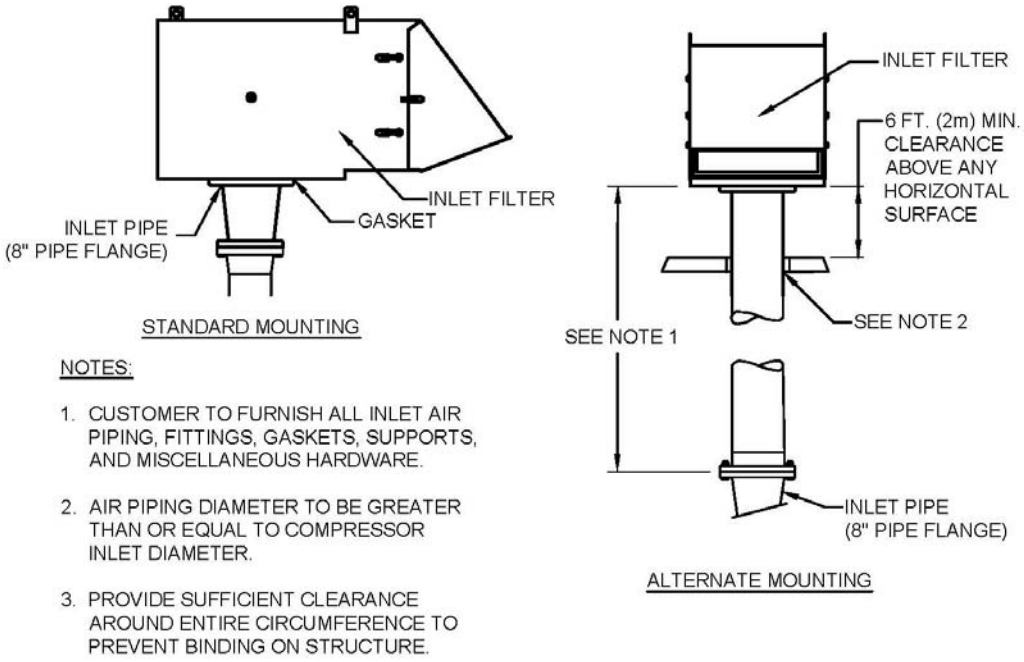

NOTES:

1. CUSTOMER TO FURNISH ALL INLET AIR PIPING, FITTINGS, GASKETS, SUPPORTS, AND MISCELLANEOUS HARDWARE.
2. AIR PIPING DIAMETER TO BE GREATER THAN OR EQUAL TO COMPRESSOR INLET DIAMETER.
3. PROVIDE SUFFICIENT CLEARANCE AROUND ENTIRE CIRCUMFERENCE TO PREVENT BINDING ON STRUCTURE.

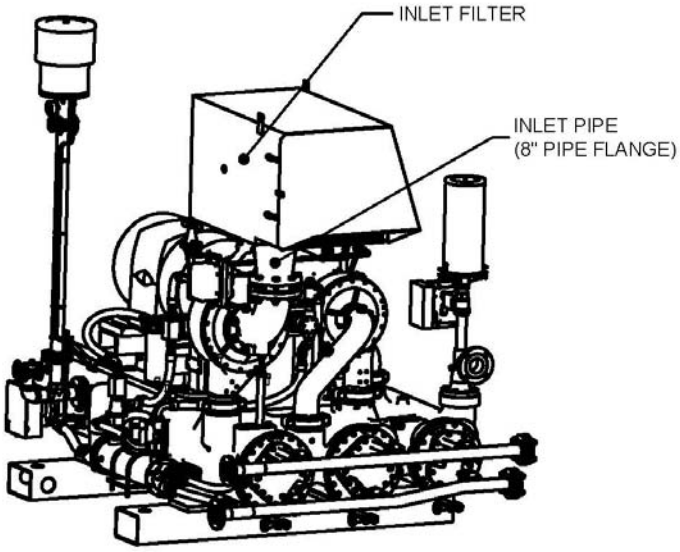

FIGURE 2-1
COMPRESSOR INLET AIR PIPING
(Not applicable for compressors with sound enclosure option)

The filter must be adequately supported. It is recommended that a suitable access be provided for visual inspection of the filter and for maintenance purposes. Poorly located filters usually lead to inferior filter maintenance.

Generally, filters are to be serviced when the pressure drop increases by 10 inches (25 cm) of water above the clean pressure drop.

Air Discharge Piping

The design of the air discharge piping is usually more complicated than the inlet piping because of the higher pressures. The following information should be thoroughly reviewed prior to starting on the design.

The typical air distribution system may include check valve, a block valve in the discharge air header, air receiver, expansion joint(s) and pipe with control connections, fittings, gaskets, hardware, hangers and supports. The system should be arranged so that the compressor, and air receiver are as close together as possible (use of 90° elbows is recommended to reduce piping strain). Refer to FIGURE 2-2 for relative component locations and further details on the discharge air system.

If the Polaris P300 Compressor discharge is connected to a manifold common to other compressors, it must be completely isolated from any pulsating airflow such as that produced by reciprocating compressors. This can be accomplished by connecting the Polaris P300 Compressor directly to an air receiver or to a point downstream of the air receiver or other pulsation-dampening device. If this is not done, the pulsations may result in control problems and possible damage to the air discharge check valve or the compressor.

Depending on system design, air piping may have a tendency to move under certain operating conditions such as during abrupt load changes. Adequate guides, anchors or supports must be installed to restrain the pipe and prevent excessive forces and moments from acting on the compressor flange.

The extensive variety of discharge air system arrangements precludes the possibility of giving adequate coverage to the subject of piping force and moment calculations in this manual. Calculations for flange loads must include all reactions due to piping system weight and thermal growth. The resultant forces and moments transmitted to the air discharge flange must be within the limits listed in Table 2-1.

It is recommended that an expansion joint be incorporated in the discharge air piping system to ensure that compressor flange load limits are not exceeded. Expansion joints should include a liner and two tie rods.

Note

Bypass silencer and piping is not required on compressors provided with sound enclosure option. Bypass silencer is integral with sound enclosure.

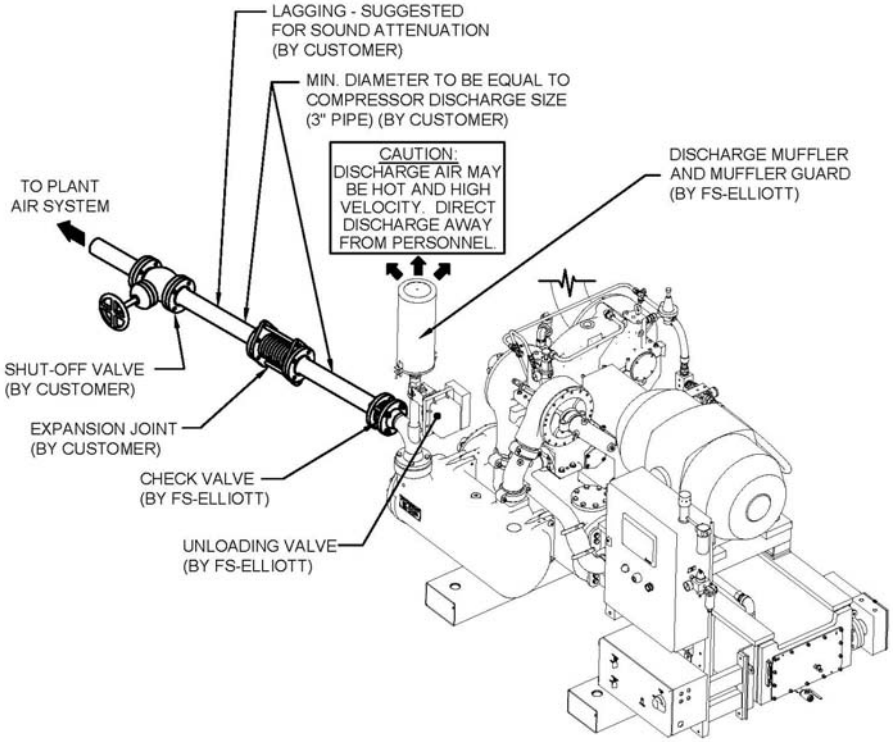

FIGURE 2-2
DISCHARGE AIR PIPING

The pressure rating of the discharge air piping must be suitable for compressor surge pressure levels. Use one hundred and twenty percent (120%) of the rated absolute compressor discharge pressure as the maximum operating pressure level. The suggested hydro test pressure level for system components is one hundred and fifty percent (150%) of the surge pressure.

Piping in the discharge air system is subject to condensate buildup at various times. Horizontal runs must slope away from the compressor to prevent condensate draining back into the compressor. Adequate drain connections with valves or traps are recommended at all low points in the system to drain the condensate. Manually operated drain valves, if used, should be positioned for easy access.

Use gradual transition pipe sections when changing diameters. Avoid the use of short radius elbows and minimize the number of fittings and turns which are major contributors to air system pressure drop.

The compressor is furnished with a mounted unloading control valve and muffler. The muffler is enclosed in a muffler guard to dissipate the discharge air. Under normal operating conditions, the discharge air leaving the muffler is warm (approximately 110°F) and saturated. It is not unusual to have condensate form in the muffler and drip from the muffler enclosure during humid conditions.

WARNING

The compressor should never be operated with the muffler guard removed. Personnel injury can occur if the guard is removed while in operation. If muffler guard becomes damaged, it needs to be replaced.

WARNING

Should the aftercooler lose its cooling capability (dirty cooler, high cooling water temperature, inadequate cooling water flow), the discharge air from the discharge muffler could become hot.

As an option, the discharge muffler can be mounted at a remote location away from the compressor. This can be done by running pipe from the unloading valve mounted off the after-cooler, to the new location of the muffler. The size of this pipe is to be 2 inches in diameter or larger. Using smaller size pipe will restrict the flow of air going to the discharge muffler, resulting in pressure control problems.

The system pressure signal is to be taken from a tapped connection downstream of the check valve. The system pressure signal is connected to the side of the panel (SPT). A manual shut off valve is recommended in the sending line for maintenance purposes. If the compressor has an R1000 control panel, the system pressure is sensed by a transmitter located downstream of the check valve. The transmitter is connected by a cable to the wiring block on the compressor.

The compressor models covered in this manual are furnished with an air discharge check valve mounted directly to the air discharge flange connection of the compressor. The check valve is of the type that is mated between two flanges. The customer will only need to mate the discharge piping flange to the check valve.

CAUTION

Insure the check valve is installed with airflow in accordance with the directional arrow located on valve housing.

A positive shutoff valve must be installed in the compressor discharge air pipe on the downstream side of the check valve to isolate the compressor from the air system. The check valve is not to be considered as an alternate to the positive shutoff valve. A check valve failure on a pressurized system not having a shutoff valve could result in reverse rotation of a non-operating compressor. This, in turn, could result in severe mechanical damage to the compressor and driver due to inadequate lubrication or possible injury to personnel if servicing the compressor.

WARNING

The positive shutoff valve in the discharge air system must be closed when servicing the compressor to avoid possible mechanical damage or personal injury. The valve should be tagged or locked in accordance with site rules to prevent opening the valve during maintenance.

WARNING

Air discharged from the atmospheric bypass line is hot. Do not direct the bypass into or near areas occupied or used by personnel.

An air discharge check valve is required for all installations to prevent reverse air flow through the compressor while shut down. Only FS-Elliott's supplied check valve should be installed since this is a critical protective item. The check valve should be installed in the discharge air header immediately downstream of the connection for the atmospheric bypass valve line.

The valve can be installed in a horizontal section of piping or a vertical upward flow of piping. The valve is designed for installation between two pipe flanges. Connection flanges and bolts are not provided.

The diameter of the piping must be equal to or exceed the "D" dimension on the check valve, as shown in the diagram below. And, at least one pipe diameter of straight piping is required downstream of the check valve to ensure full movement of the valve disk and ensure no interference with the piping. Contact with the piping can cause the disk to remain open resulting in reverse rotation of the air compressor.

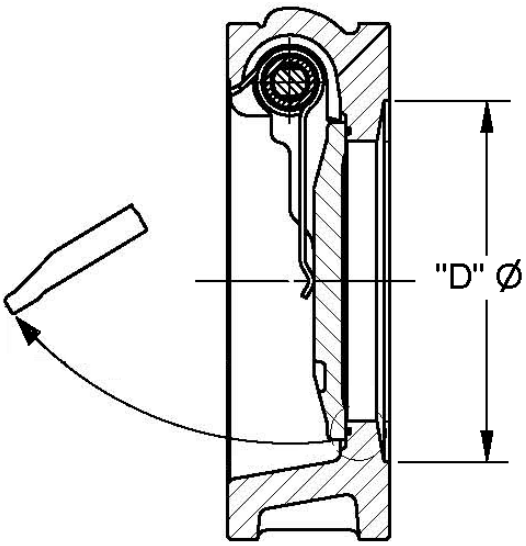

FIGURE 2-3
AIR DISCHARGE CHECK VALVE

Cooling Water Piping

A coolant supply is required for each Polaris P300 Compressor and the usual coolant media is water. FIGURE 2-6 is a schematic showing the typical cooling water piping arrangement for the intercoolers, aftercooler, and oil cooler.

Water connection sizes to the water manifold inlet and outlet are 2” 150# RF.

Cooling water supply pressures are to be limited to a maximum of 150 psig (10.3 bar) gage for the intercoolers, aftercooler, and oil cooler. Customer supplied water system piping should be rated consistent with water supply pressure.

Pressure drops and approximate cooling water flow rates for the standard intercoolers and oil coolers are listed on the Utility List (refer to the Equipment Data section of the manual).

Note

An insufficient pressure drop across the cooler connections or insufficient water flow will result in inadequate cooling.

Inlet temperature of the cooling water supplied to the compressor should be equal to, or less than, the 95°F (35°C). Water inlet temperature exceeding 95°F (35°C) will have a negative effect on compressor aerodynamic performance and may also result in alarms or trips due to high lube oil or interstage air temperature.

Water piping diameters should be selected on the basis of 5 to 8 ft/s (1.5 to 2.4 m/s) recommended water velocity. Excessive water velocity will lead to erosion problems, noise or insufficient heat transfer. Lower velocities will result in increased cooling water discharge temperature and could lead to increased deposits.

Piping should be arranged so that excessive strains are not imposed on the intercooler or oil cooler water connections. The customer piping should be completely flushed prior to making the final connections to the compressor water manifold. A temporary screen located at manifold inlet connection may be used to assure piping cleanliness and then removed after it has been determined that the system is clean.

An optional control feature is available for the cooling water system. This is a cooling water solenoid shutoff valve. The cooling water solenoid valve is to be installed in the supply header pipe. Field wiring, which is covered later in this chapter, is required to connect the water solenoid and the control panel.

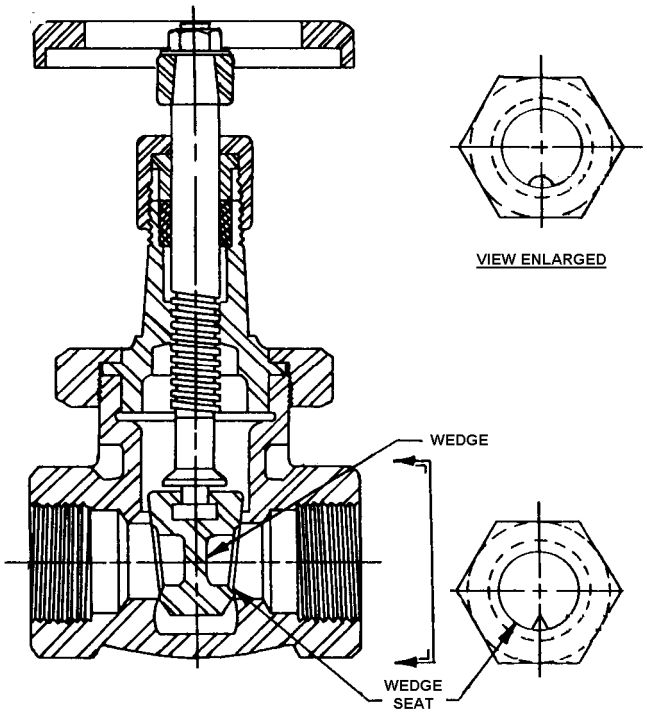

FIGURE 2-4
INTERCOOLER DRAIN VALVE

Intercooler Condensate Piping
Moisture is condensed as the compressed air is cooled between compression stages. The amount condensed depends upon humidity conditions existing at site. The condensate must be drained from the compressor.

CAUTION
Condensate collects in the bottom of the intercooler shells and must be continuously drained. Failure to drain the shells may result in damage to the compressor due to water carryover.

Each compressor is furnished with self-cleaning, notched drain valve for each intercooler and aftercooler. The condensate drain line must be piped separately from each intercooler and aftercooler shell to an open drain as shown in FIGURE 2-5. The outlet end of each drain is to be positioned so that each may be observed individually during routine visual checks and adjusted if needed.

CAUTION
Keep each intercooler & aftercooler condensate drain line separate from any other drain.

Pulsar Drain Trap (Optional) is an automatic drainage trap that will open when the condensation from the intercooler reaches a certain level. The Pulsar Drain Trap must be piped separately from each intercooler and aftercooler shell to an open drain. The Drain Trap can be installed on a rigid support, or it can be hung attached to the piping.

For the Pulsar Drain Trap to work properly, it is required that a vent line be piped from the drain trap vent connection to the intercooler/aftercooler vent connection provided on the heat exchanger chamber. Reference the Unit Outline located in the Chapter 10 – Drawings for the location of the chamber connections. The minimum size tubing or pipe that is to be used for the vent line is ½ inch.

It is also recommended that a bypass drain valve be piped in parallel with the Pulsar Drain Trap in the event of a trap failure. While this is the preferred method, it is not required for the trap to be installed with a bypass valve to operate properly. Refer to Figure 2-5 for piping layout example.

Each Pulsar Drain Trap includes a malfunction alarm that will send a signal to the compressor's control panel that triggers an audible alarm and starts a unit trip timer. Refer to the control panel wiring schematic for power and alarm wiring diagrams located in Chapter 10 –Technical Drawings.

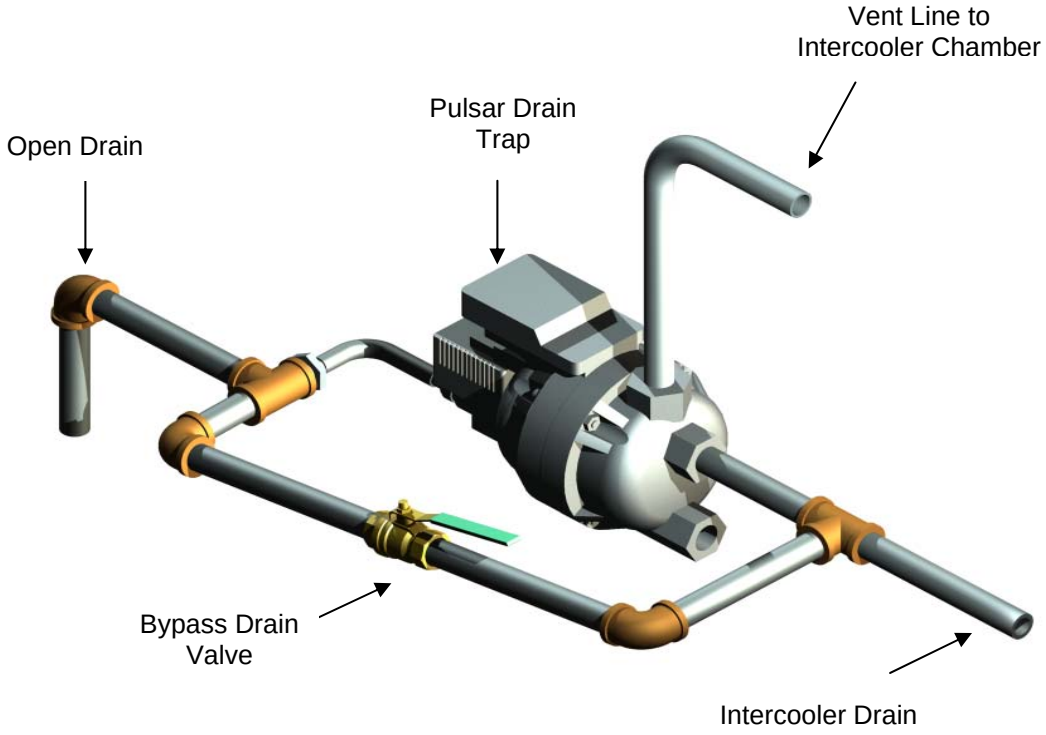

FIGURE 2-5
PULSAR DRAIN TRAP
PIPING LAYOUT EXAMPLE

The piping for the Pulsar drain valves is shown below. The inlet connection must be a continuous slope to the Pulsar drain valve. The outlet connection is near the bottom of the drain valve. An equalizing line needs to be piped to the top of the drain valve, as shown below.

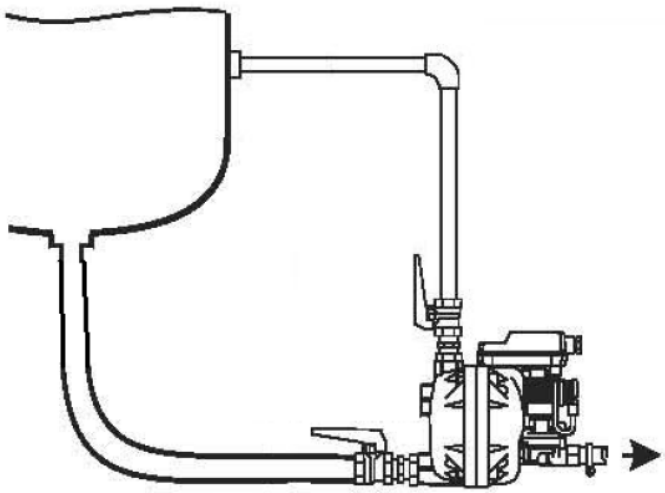

The Pulsar drain valves require +120 VAC power. The diagrams below show the terminals for +120 VAC power.

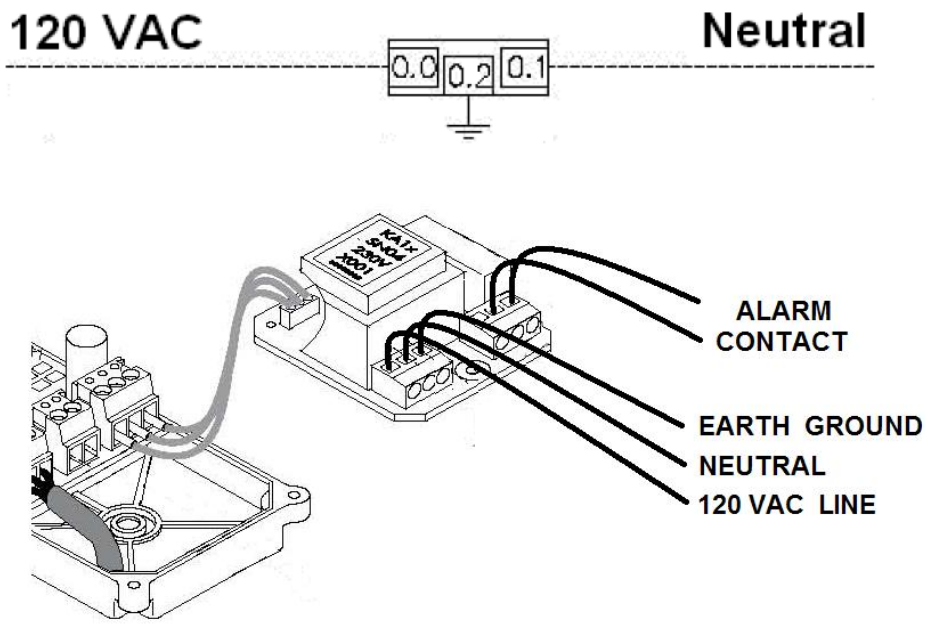

The Pulsar drain valves also provide an alarm if there is a malfunction or a high condensate level. The diagram above shows the location of the alarm contact. The contact is normally open. The contact closes once power is provided to the Pulsar drain valve. The contact opens if there is a malfunction or a high condensate level.

The diagram below shows the wiring of the alarm contact. If multiple Pulsar drain valves are provided, the alarm contacts are wired in series, as shown below. For wiring alarm contacts inside control panel, refer to field wired connection diagrams in Chapter 10. When the condensate level rises, the contact in the switch opens and the control panel annunciates an alarm.

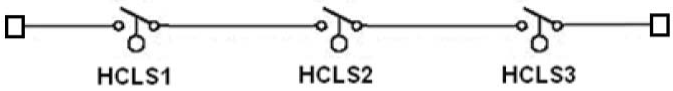

HIGH CONDENSATE ALARM

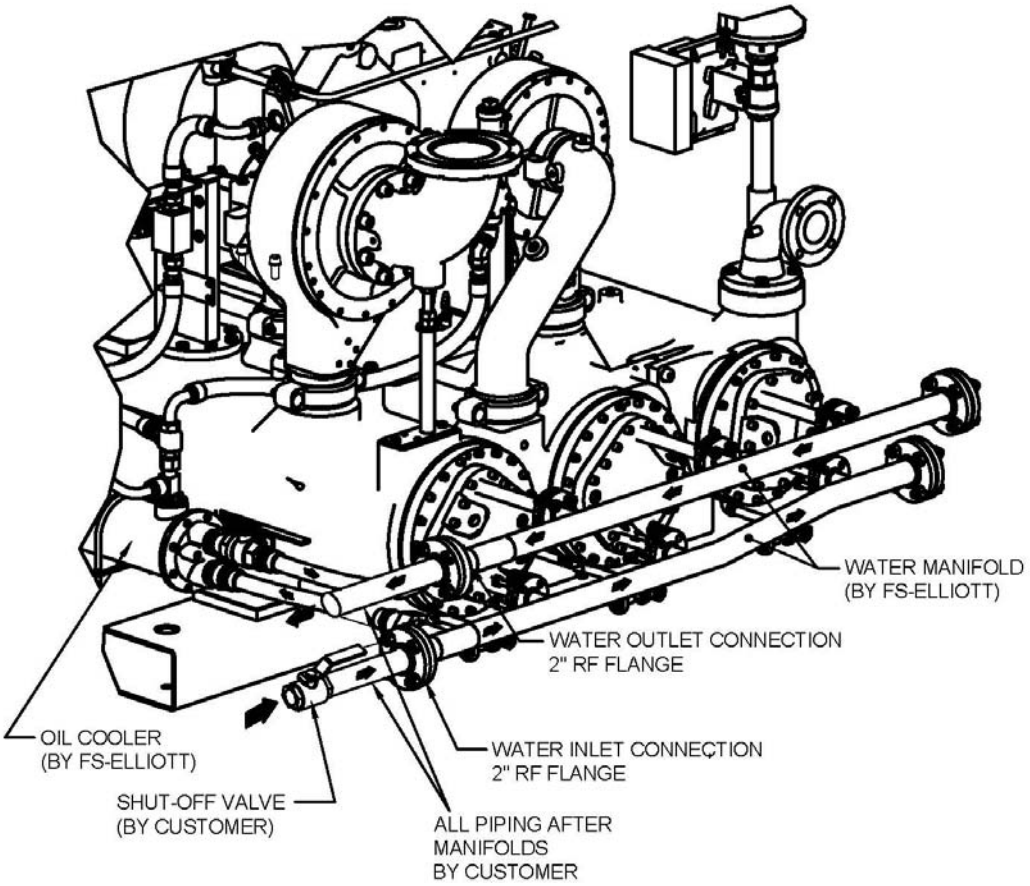

FIGURE 2-6
COMPRESSOR & COOLING WATER PIPING

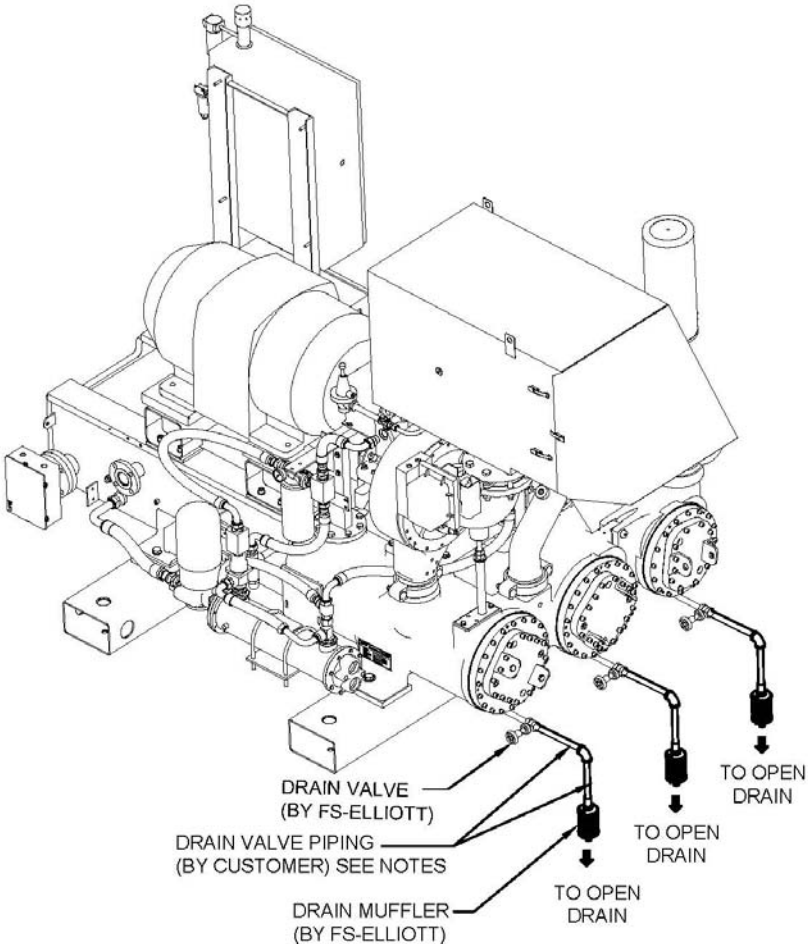

OPTIONAL

NOTES:

1. DRAIN VALVE PIPING MUST NOT BE COMBINED INTO A SINGLE OUTLET. VALVE OUTLETS ARE TO BE DIRECTED TO OPEN DRAINS.
2. MUFFLERS SHOULD BE INSTALLED VERTICALLY DOWNWARD TO PREVENT CONDENSATE BUILD-UP INSIDE MUFFLER.
3. EACH OUTLET MUST BE POSITIONED SO THAT IT MAY BE OBSERVED DURING COMPRESSOR OPERATION.

FIGURE 2-7
COMPRESSOR DRAIN PIPING

Intercooler Drain Mufflers (Optional)

The Thru-Flow muffler can be used as a very effective means of noise reduction on intercooler drain lines. The Automuffler is selected to match the ½ inch pipe diameter of the intercooler drain line. The device does have some limitations that would require additional preparations beyond typical intercooler drain line installation.

1. The mufflers should be installed vertically downward to prevent condensate build up inside the muffler.

2. The muffler will allow misting through the sidewall and, therefore, should be installed in a drain trough deep enough to accept the muffler body length.

3. The drain trough opening should be wide enough to accept the full diameter of three mufflers when used with Polaris P300 compressor. Each muffler is 3.15 inch (80 mm) in diameter and 7.00 inch (178 mm) in length.

4. A stainless steel version is available at an additional cost for a longer life.

5. Piping connected to the inlet and discharge of the muffler (1/2” NPT) must be the same diameter or larger. (Preferably, there is no piping connected to the discharge.)

6. This device could be used in conjunction with acoustic insulation covering the drain trough for a highly effective noise reduction installation.

CAUTION
Inspect the muffler on a periodic basis. Clean or replace if plugging should occur.

CONTROL AIR SUPPLY

Control air is required by the seal air buffer system. Control air supplied by the labeled L7 will supply air to the buffer system. Refer to the Outline drawing and the P & I Diagram for the location of the L7 connection. Refer to Chapter 10 – Technical Drawings.

The control air supply should supply an uninterrupted supply of instrument quality air during compressor operation. Supply pressure requirement is 70 to 120 psig (4.9 to 8.4 kg.cm^2). The supply air temperature should be limited to approximately 125°F (52°C). Normal control air consumption is approximately 19.0 scfm under steady state conditions.

ATMOSPHERIC BYPASS VALVE (UNLOADING CONTROL VALVE)
For some compressor configurations, the atmospheric bypass valve will need to be field installed as noted in the section on air discharge piping. The valve will need to have a pneumatic control signal for the standard pneumatic controlled valve, 48 VDC or 110 VAC / 1 Phase provided for the optional electric valve. For the optional electric valve, a 4-20 mA signal will also need to be wired from the control panel to the valve. Reference the Field Wired Connection Diagram in Chapter 10 for details.

CAUTION
The Inlet Control Valve and the Atmospheric Bypass Valve are factory set and calibrated. Do not attempt to make adjustments. Call FS-Elliott for service.

WARNING
Do not attempt to work on the actuator of the inlet valve or atmospheric valve. These devices are spring loaded and could cause injury if disassembled.

INLET CONTROL VALVE WITH PNEUMATIC ACTUATOR
The motive air supply connection for the valve is a 1/4 inch NPT female bulkhead connector located on the control panel. The valve is mounted and the control air is pre-piped at the factory for standard units.

INLET CONTROL VALVE – OPTIONAL ELECTRIC ACTUATOR
The compressor inlet butterfly valve is provided with limit switches on the electric actuator that prevents the valve from going fully closed. Fully closing the inlet valve during compressor operation will result in compressor damage. The limit switches are initially set at the factory to place the valve at approximately 20 degrees from the closed position. If the valve's closed position is too far open when starting the compressor, an excessive amount of air enters the compressor and overloads the motor. This will result in a slow acceleration and possible stalling of the motor.

INLET CONTROL VALVE (Compressors with Wye-Delta Starters)

If the motor does not reach full speed by the time the starter contacts switch from wye (start) to delta (run), then the following corrective steps must be taken.

Note
Switching of the contacts from wye to delta is when the 1S contactor opens and the 2M contactor closes. The 1 M contactor remains closed during the entire starting sequence.

1. With the compressor running and the inlet valve in the closed position, the 1st stage inlet pressure should be between 2.7 and 3.0 psia (5.51 –6.12 in HG). A pressure gauge placed on the inlet elbow to the first stage indicates this pressure. Adjust the inlet valve actuator limit switches accordingly for the required inlet pressure. (Closing the inlet valve results in a lower inlet pressure) The valve should be stroked several times to insure the valve's closed position is properly set.

2. Once the inlet valve's closed position is properly set, then the motor starter time delay setting needs to be adjusted so the starter contacts switch from wye (start) to delta (run) after the motor has reached full speed. When starting the compressor, record the time from start until the motor current falls off rapidly indicating that the motor is up to full speed. The contactors must not transition to the delta (run) mode before the current falls off rapidly. If this occurs, the time delay (TD) setting is too short. Stop the motor and set the TD setting to a longer time. The timer delay should be set to a point 20% longer than the time required to reach full motor speed. (DO not exceed a timer delay setting of 60 seconds for wye delta controllers).

OIL MIST ELIMINATOR

The purpose of the oil mist eliminator (OME) is to vent air pressure in the oil reservoir and gearcase. The OME filter coalesce the oil mist from the air and drains the oil back to the oil reservoir.

The OME filter housing may be shipped loose due to height restrictions of the freight carrier. If it is shipped loose, it must be installed prior to starting the unit.

Three connections must be made for proper installation of the filter housing. The OME housing is installed using the supplied gasket, studs, washers, and nuts. Next, the 3/8" diameter tubing assembly shipped with the OME must be connected between the drain on the bottom of housing and the OME drain connection located on the baseplate. Next, connect the green/yellow ground wire to the provided ground stud on the OME housing.

MISCELLANEOUS FIELD WIRING

In addition to the following, reference the Connection Diagram - Field Wired Devices in Chapter 10 – Technical Drawings for details on wiring connections that need to be made prior to startup.

COMPRESSOR DRIVE MOTOR

Motor

Wiring for the compressor drive motor power supply is to be done in accordance with connection details shown on engraved tags permanently attached to the motor housing. Additional information is included in the manufacturer's instruction material and on the motor outline drawing in Chapter 8 - Accessories of this manual.

Wiring of the incoming line to the motor is to be done by qualified personnel according to local codes and standards. Insure that the power supply and wiring is suitable for the current and frequency of the main drive motor as listed on the motor data sheet in Chapter 8 – Accessories of this manual and the nameplate of the motor.

A rotational check must be made prior to coupling of the motor and compressor to ensure rotation is in accordance with the directional arrow attached to the compressor gear housing.

WARNING

Incorrect driver rotation may result in severe damage to the compressor and may also affect warranty.

The power supply requirement and wiring connection details for field connection of motor space heaters is shown on the motor outline drawing in Chapter 8 - Accessories.

Motor Amp Transmitter (MAT)

A motor amp transformer is mounted inside the main motor's terminal box. This transformer is factory wired to the compressor control panel. One of the motor power leads is to pass through the opening in the motor amp transmitter.

Motor Starter and Control

When optional drive motor starters are purchased from FS-Elliott, the necessary contacts or other provisions to interface with the compressor control system are included. Starters furnished by others must also include these provisions; therefore, thoroughly review all Field Wired Connection Diagram drawings for complete starter requirements prior to procurement of the starters.

A normally open "dry" relay contact is provided in the FS-Elliott control panel for the purpose of starting and stopping the motor. The customer must wire this circuit into the starter's start/stop circuitry. The customer must eliminate any possibility of stating the motor at the starter.

A normally open relay contact for the drive motor status is required in the starter to indicate that the starter circuitry is activated when the contact closes. The relay contact must be field wired to the compressor control panel.

AOP Starter Panel Grounding Bus (R200 Panel)

The Common AC Ground Bus inside the AOP motor starter enclosure must be run to an appropriate earth ground.

Low Voltage Panel (R1000 Panel)

The Common AC Ground Bus inside the low voltage panel enclosure must be run to an appropriate earth ground.

Electric Motor Driven Oil Pump

Prior to running the compressor, ensure that the auxiliary oil pump rotation is in accordance with the directional arrow that is normally located on the pump housing near the coupling end. Pump rotation can also be checked by circulating the auxiliary oil pump and viewing the control panel screen to see if there is oil pressure. If rotation is incorrect, the wiring to the pump motor starter panel terminals T1, T2, & T3 need to be switched.

CONTROL PANEL

Instrument Ground Bus: The control panel instrument ground bus is to be connected to an earth ground to prevent noise interference and damage to the circuit boards. Proper grounding techniques should be used. Reference the Connection Diagram - Field Wired Devices in Chapter 10 – Technical Drawings.

System Pressure Transmitter (Shipped Loose for Panel with Low Voltage Motor Starter): Customer will need to connect the shipped loose System Pressure Transmitter (SPT) to their discharge piping directly downstream of the discharge check valve on the compressor. A 1/4 inch NPT half coupling on the 3 inch line is all that is needed for the transmitter to be mounted. The transmitter cable is then connected to the wiring block. Reference the Connection Diagram - Field Wired Devices in Chapter 10 – Technical Drawings for wiring details.

Refer to Chapter 6 - Controls for additional Control Panel details.

LUBRICATION SYSTEM

Refer to Chapter 5 - Lubrication for Lubrication System details.

WARNING

While operating the auxiliary oil pump, ensure that 4 to 7 psig (.28 to .41 bar) seal air pressure is available. Otherwise, oil migration across the seals could occur introducing oil into the process piping.

SHAFT ALIGNMENT

Polaris Compressors are usually tested with the contract drivers and, unless there is a shipping limitation, the compressor package is shipped with the driver mounted on the baseplate. All drivers are aligned for factory testing, however, drivers must be checked for alignment after completing installation of the compressor at the site and re-aligned if necessary to bring within the specified tolerance. The alignment tolerances and recommended procedures are outlined in the following sections.

CAUTION

Alignment must be checked and corrected if required before initial compressor operation.

Supply lubrication to all bearings before rotating or moving the compressor bullgear shaft or the driver shaft.

Dowel pins are not factory installed in the driver feet due to the possible need for re-alignment in the field. After final coupling alignment is complete, install dowels in the driver feet as noted on the driver outline drawing. Pilot holes are usually provided in the driver feet for dowels that are to be furnished by others.

Note

If the driver is removed from the baseplate for shipment, the factory installed shims located under the driver feet are secured to the driver mounting pads on the baseplate or to the driver feet. These shims should not be separated because the shims can be reinstalled for initial vertical alignment when the driver is mounted in the field.

The two types of misalignment depicted in FIGURE 2-8 just be checked and corrected, if required, to meet the limits shown in TABLE 2-3. Angular displacement is a form of misalignment in which the shaft centerlines intersect, but are not parallel. Parallel offset indicates the amount of parallel misalignment between the centerlines of two adjacent shaft ends.

When making the initial alignment, allowances must be made for thermal growth that occurs when the compressor gear case and the driver change from ambient to normal operating temperatures. Use the allowances listed in TABLE 2-3 for cold alignment of the driver relative to the compressor. This is necessary to ensure collinear shaft alignment (FIGURE 2-9) during normal operation. Collinear alignment exists when shaft centerlines are parallel and intersect.

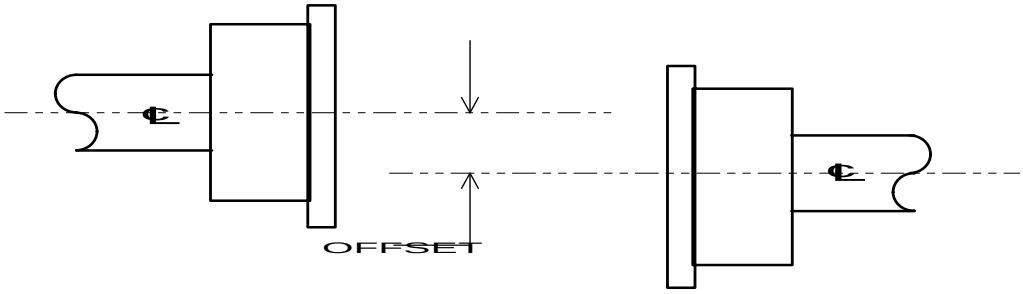

PARALLEL MISALIGNMENT

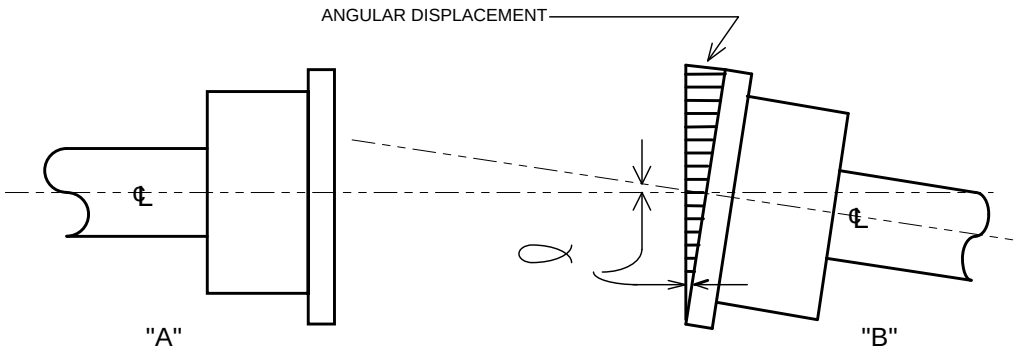

ANGULAR MISALIGNMENT

FIGURE 2-8
TYPES OF MISALIGNMENT

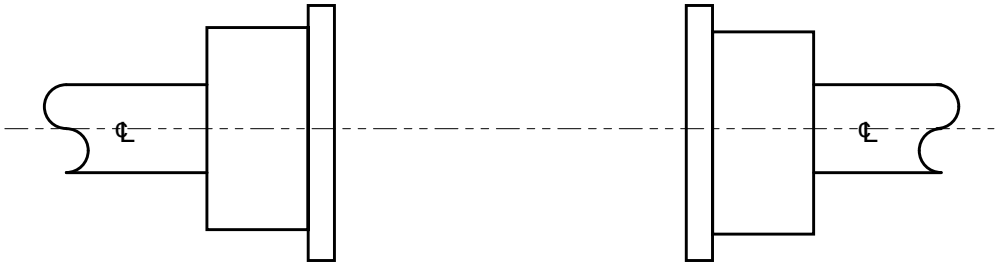

FIGURE 2-9
COLLINEAR ALIGNED SHAFTS

TABLE 2-3
COLD ALIGNMENT SETTINGS

Compressor Driver	Allowances	
	Without Sound Enclosure	With Sound Enclosure
Motor	Motor Centerline 0.005 in. (0.13 mm) above Compressor Centerline	Motor Centerline 0.005 in. (0.13 mm) Above Compressor Centerline

Pre-Alignment Checks

1. Be certain the driver is level and square relative to the compressor gear case.

2. Ensure the gear case and driver rest firmly on the baseplate, with equal loading at each hold-down bolt.

3. Tighten all equipment hold-down bolts.

Motor Magnetic Center
If the air compressor is driven by an electric motor, the following procedure should be used to determine the magnetic center of the motor.

1. Uncouple the motor from the compressor.

2. Fasten the motor coupling sleeve to the coupling hub, if the sleeve is mounted on the hub, so that the sleeve is secure during solo operation of the motor.

3. Ensure that the motor bearings are lubricated. Refer to the lubrication plate mounted on the motor housing or motor instruction information.

4. Start the motor. Check the direction of rotation by comparison with the directional arrow attached to the coupling end of the motor or the arrow on the compressor gearbox.

5. While the motor is running, locate the magnetic center that is its normal axial position during operation. This is done by lightly scribing a mark on the shaft. The suggested location is at the point where the shaft extends from the bearing housing.

6. Stop the motor. If the rotation is incorrect, reverse the motor power leads and re-check the rotation before proceeding.

Distance Between Shaft Ends (BSE)
Establish the proper distance between shaft ends (BSE) before proceeding with alignment of the driver and compressor. The BSE dimension is shown on the certified compressor outline drawing. Use the following procedure to obtain the BSE dimension.

1. The compressor bullgear shaft must be moved toward the motor. This is its normal axial operating position relative to the driver.

2. Place the motor shaft on its previously determined magnetic center.

3. When the shafts are correctly positioned relative to each other, use an inside micrometer to measure the distance between the shaft ends. Refer to FIGURE 2-10.

4. Place a dial indicator at the outboard end of the driver and move the driver as required to obtain the proper distance between shaft ends.

5. Use an inside micrometer to recheck the distance between the shaft ends.

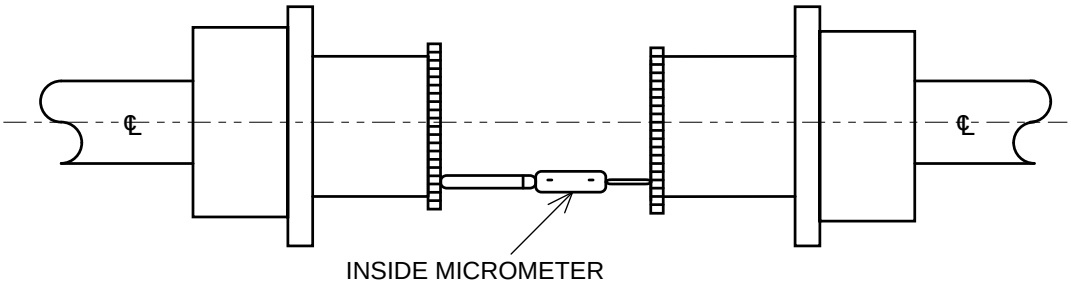

FIGURE 2-10
DISTANCE BETWEEN SHAFT ENDS

Reverse Indicator Method of Alignment
Preparation and use of a shaft alignment map, as shown in FIGURE 2-15, is recommended. A shaft alignment map provides a convenient form on which to record indicator readings and calculate equipment moves. Maintaining this information for comparison during maintenance inspections or for future reference can provide valuable diagnostic information should problems develop.

The reverse indicator method of alignment is recommended when the distance between the adjacent shaft ends is greater than one-half the coupling diameter. The procedure is explained below. An example of reverse indicator alignment is also provided later in this section. Blank map forms are provided in this book.

Constructing the Shaft Alignment Map

Record the compressor identification number(s), date and other information on the alignment map (FIGURE 2-16). Construct the alignment map using the following procedure. Refer to the example shown on FIGURE 2-15 for further guidance.

1. Mark the horizontal axis using a convenient scale, such as 1/4 inch per division.

2. Mark the vertical axis with .001 inch per division. This coordinate has been expanded to clearly show misalignment.

3. Measure distances from the end of the compressor shaft to the following points:
   A. Driver shaft end.
   B. Centerline of the driver's inboard support foot hold-down bolts.
   C. Centerline of the driver's outboard support foot hold-down bolts.

   Plot these distances as vertical lines. This is the same as the one drawn for the "END OF COMPRESSOR SHAFT" as shown on FIGURE 2-15.

4. The solid, horizontal lines on the shaft alignment map represent the hot collinear shaft alignment. If the compressor and driver grew the same amount thermally, then the cold alignment would be the same as the hot alignment. However, since equipment usually does not grow the same amount thermally, one machine must be set lower relative to the other machine.

   The compressor is factory doweled, therefore it should remain fixed and the driver should be moved to its desired cold alignment setting relative to the compressor. Refer to TABLE 2-3 for the recommended cold alignment setting.

5 Use a dashed line to indicate the desired cold position of the driver shaft in the vertical view. In our application, thermal growth does not effect the alignment in the plan view; therefore the desired cold position of the driver shaft in the plan view is collinear with the compressor shaft.

Note

Assume the NORTH, EAST and WEST directions are as shown on the alignment map example (FIGURE 2-15).

Alignment Procedure

The reverse indicator method involves taking readings from one shaft to the rim surface of the adjoining shaft and vice versa as shown in FIGURE 2-11. This method of shaft alignment eliminates the need for taking face readings.

1. Any piping strain on the equipment must be corrected before proceeding.

2. When spanning the coupling gap with an indicator bracket, zero sag is impractical to achieve, therefore the actual amount of sag should be determined and recorded on the alignment map. To determine sag in the bracket, attach the bracket to a rigid pipe. A 4-inch schedule 40 (approximately 100 mm I.D. X 6 mm wall thickness) or similar size pipe is adequate. With the pipe and attached bracket in the horizontal plane, and the dial indicator reading off the top of the pipe, set the dial indicator on zero. Then rotate the pipe 180° so that the dial indicator is reading off the bottom of the pipe. This indicator reading is the amount of sag in the bracket and is to be expressed as a negative value.

Note

It is recommended that the bracket sag be recorded on the alignment map. Failure to consider the sag can result in gross misalignment.

3. Make a mark on the outside diameter of the driver coupling hub and compressor coupling hub using a felt pen or chalk.

4. Attach the indicator bracket to the driver coupling hub. Attach the dial indicator to the bracket so that it indicates off the compressor coupling hub. Refer to FIGURE 2-11.

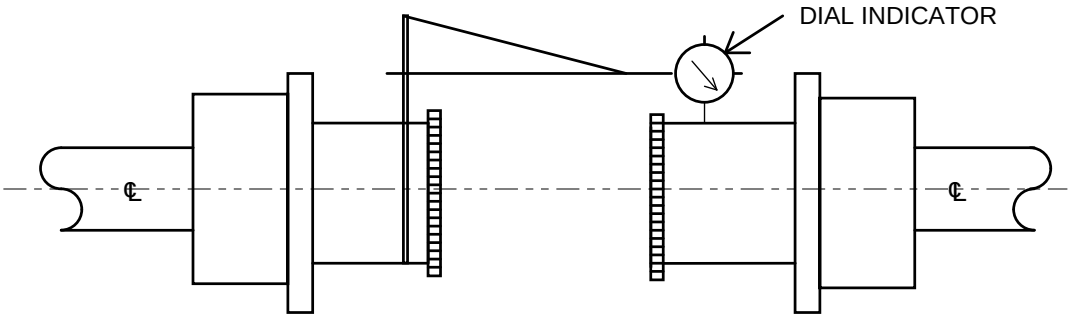

FIGURE 2-11
REVERSE INDICATOR READINGS

5. Rotate the driver shaft until the dial indicator is at the top dead center position of the compressor hub (0° position). Rotate the compressor shaft until the mark on the compressor hub (Step 3, above) is located at the top dead center position (0° position). Set the dial indicator on zero.

Note

When taking dial indicator readings as noted in all the following steps, be certain to record both the numerical value and algebraic sign of each reading.

6. Rotate the driver shaft and the attached dial indicator 90° toward the EAST direction. The EAST direction is an assumed direction as shown on the alignment map (FIGURE 2-16). Rotate the compressor shaft 90°, also to the EAST direction, so that the mark on the compressor hub aligns with the dial indicator. Record the dial indicator reading on the alignment map at the "DRIVER TO COMPRESSOR" 90° position. Repeat this procedure for the 180° and 270° positions and record reading. Upon return to the top position, the indicator should return to zero. It is recommended that this step be repeated to verify readings.

7. Remove the indicator bracket from the driver coupling hub and mount it on the compressor coupling hub. Attach the dial indicator to the bracket so that it indicates off the driver coupling hub.

8. Rotate the compressor shaft until the dial indicator is at the top dead center position of the driver hub (0° position). Rotate the driver shaft until the mark on the driver hub diameter (Step 3) is located at the top dead center position (0° position). Set the dial indicator on zero.

9. Rotate the compressor shaft and the dial indicator 90°, also toward the EAST direction, so that the mark on the driver hub aligns with the dial indicator. Record the dial indicator reading on the alignment map at the "COMPRESSOR TO DRIVER" 90° position. Repeat this procedure for the 180° and 270° positions. On return to the top position, the indicator should return to zero. Repeat this step to verify readings.

10. Using the equations shown below, calculate the alignment adjustment values A, B, C and D:

    A = Compressor to Driver 180° Reading - Bracket SAG) /2

    B = (Driver to Compressor 180° Reading - Bracket SAG) /2

    C = (Compressor to Driver 90° Reading - 270° Reading) /2

    D = (Driver to Compressor 90° Reading - 270° Reading) /2

Note

Indicator bracket sag is a negative value. Also note that no correction for sag is required on the EAST and WEST side readings.

11. Plot the points calculated in Step 10 on the shaft alignment map in accordance with the example shown in FIGURE 2-12. Then, starting at point "B" on the alignment map, draw a straight line through point "A" and continue the straight line to the outboard end of the driver. Likewise, starting at point "D" on the alignment map, draw a straight line through point "C" and continue the straight line to the outboard end of the driver.

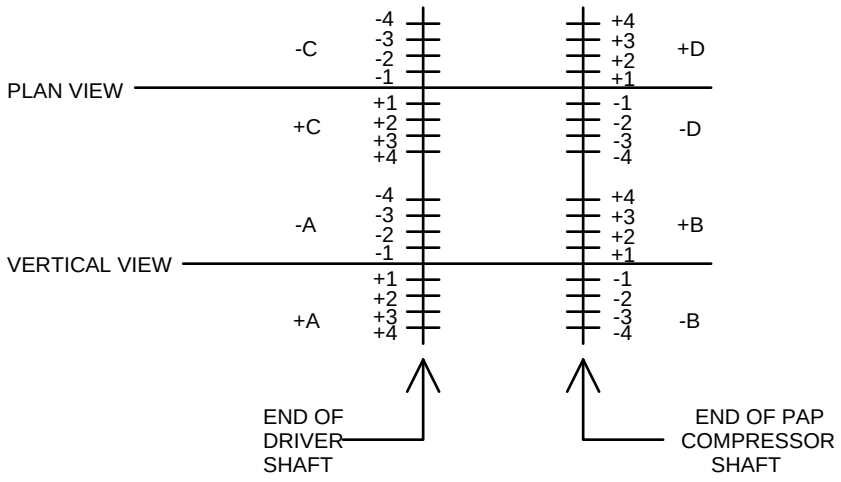

FIGURE 2-12
PLOTTING ALIGNMENT VALUES ON MAP

12. At the driver inboard foot on the alignment map, read the distance between the straight line that was drawn in Step 11 and the desired cold position line. Likewise, at the driver outboard foot read the distance between the straight line that was drawn in Step 11 and the desired cold position line.

13. Before making adjustments, install dial indicators near the driver support feet and outboard end of the driver as shown in FIGURE 2-13. The dial indicators should have dual gages as shown in FIGURE 2-14. Set the dial indicators on zero and record the readings of the small dial indicator gage.

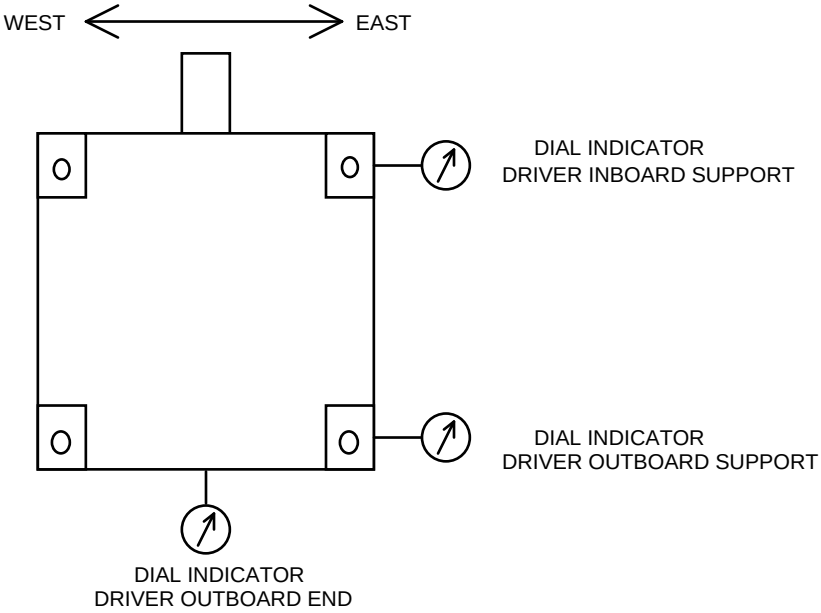

FIGURE 2-13
DIAL INDICATOR LOCATIONS

14. Loosen the driver hold-down bolts. Raise one end of the driver, make the necessary change in shim thickness under the driver feet and then lower the driver. Repeat this on the other end of the driver.

Note

Be careful not to bump the dial indicators while adjusting shim thickness under the motor feet.

15. After raising and lowering the motor, the dial indicators will no longer read zero. Move the motor until the dial indicators read zero again.

Note

Be sure that the small gages on the dial indicators read the original value that was recorded in Step 13 above, since the large gage on the dial indicator may have rotated more than a full turn.

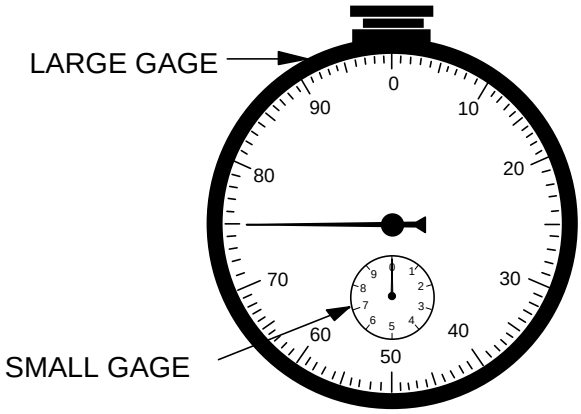

FIGURE 2-14
DUAL GAGE DIAL INDICATOR

16. Move the driver in the EAST or WEST direction (FIGURE 2-13) until the dial indicators read the necessary EAST or WEST adjustment. Tighten the driver hold-down bolts and recheck the alignment and distance between shaft ends (BSE).

17. Install dowels in the motor feet after correct alignment has been attained.

Alignment Example

1. Start to draw the map by selecting a convenient scale for the horizontal axis and draw lines to indicate the following:

   - Compressor shaft end at coupling
   - Driver shaft end
   - Driver inboard support foot hold-down bolt centerline
   - Driver outboard support foot hold-down bolt centerline

2. Draw the desired cold position of the driver shaft. Thermal growth of the compressor and driver is the same in the PLAN (TOP) VIEW, therefore the desired cold position of the driver is drawn in line with the compressor shaft.

   Thermal growth of the compressor is greater than the example motor driver in the VERTICAL VIEW, therefore the desired cold position of the driver shaft is drawn above the cold position of the compressor shaft. In this example, the motor shaft is .005 inch higher than the compressor shaft.

   For actual field alignment use the cold alignment settings shown in TABLE 2-3 for the specific compressor model and driver type.

3. Assume an indicator bracket sag of -.002 inch for the example and record this on the map.

4. The example rim readings for both shaft ends are recorded on the map.

5. Calculate the values for A, B, C and D using the equations given in Step 10 above.
   Answer (in thousands of an inch): A = +5: B = -3: C = -6; D = +9

6. Plot the values calculated in Step 5 above. Refer to FIGURE 2-12.

7. Draw a straight line through points "C" and "D" in the PLAN VIEW and another through "A" and "B" in the VERTICAL VIEW. These lines represent the actual position of the driver shaft with respect to the compressor shaft.

8. Then, doing an actual alignment, the dual gage dial indicators (FIGURE 2-14) would be positioned as shown in FIGURE 2-13. The large dial would be set at zero and the reading on the small dial would be recorded.

9. The distance between the actual driver shaft position and the desired cold position represents the amount of movement required in order to obtain the desired cold position. In this example, the outboard feet of the driver would have to be move toward the WEST .006 inch and raised .018 inch. The inboard feet would have to be move toward the EAST .004 inch and raised .011 inch to obtain the desired cold position.

OFF DESIGN CONDITIONS

The rated conditions of the air compressor unit are listed on the equipment nameplate. Operation of the unit beyond the rated conditions affects the performance of the compressor. These factors need to be considered in the design of the unit's installation.

The barometric air pressure at the plant should closely agree with the rated barometric air pressure. An actual barometric air pressure below the rated barometric air pressure will reduce the pressure capabilities of the compressor.

The ambient air temperature should be below the rated inlet air temperature of the unit. An actual inlet air temperature above the rated inlet air temperature will reduce the pressure capabilities of the compressor. The unit's control system can compensate for the lower inlet air temperatures. As a result, the inlet air filters should be located at a source of cool, clean, dry air.

The temperature of the cooling water should be below the rated cooling water temperature. An actual water temperature above the rated water temperature will result in increased interstage air temperatures and/or oil temperatures. Higher than design interstage air temperatures reduce the pressure capabilities of the compressor. High oil temperatures can result in premature bearing wear.

The cooling water flow rates should be equal to or slightly greater than the rated cooling water flows. Low cooling water flow rates can result in increased interstage air temperatures and/or oil temperatures. Excessive cooling water flow rates can result in erosion of the materials in the heat exchangers. The water pressure drops on the unit's nameplate indicate the required pressure drop across the inlet and outlet water connections of the heat exchanger in order to achieve the rated water flow. These water pressure drops provide an indication of the required pressure drop across the supply and return water headers. The unit's water flow requirements and water piping losses should be considered in the design of the water system.

The driver speed should closely agree with the rated driver speed on the nameplate. An actual driver speed below the rated speed will reduce the pressure capabilities of the compressor.

POWER REQUIREMENTS

The power supply to the motor and starter must be capable of maintaining an acceptable line voltage during both the starting period of the unit and while the unit is in operation. The supply transformer KVA size and impedance should be sized to minimize the voltage drop during start-up of the unit. Incoming motor feeder or motor branch circuit conductors must be properly sized. The power feed must have a disconnect means and be protected against overcurrent, ground fault, and short circuit fault.

The line voltage must not drop below the coil voltage range of the starter's contactors and control circuit devices. Contactors and control circuit devices must not be allowed to drop below 85% of the coil's rated voltage. When the contactors and control circuit devices are operating on the secondary voltage of the starter's control power transformer (CPT), the line voltage must not drop below 90% of the coil's rated voltage. Voltages below these limits may cause contactor chatter and could result in contactor burnout and damage to the starter. The line voltage should also not exceed the upper coil voltage limit off 110% of the coil's rated voltage.

The characteristics of the motor are also affected by a decrease in the supply voltage. A lower voltage extends the acceleration time of the motor, reduces the torque output of the motor, and increases the heating of the motor windings. The voltage at the motor terminals must not drop below 90% of rated voltage during start-up. In the case of a reduced voltage start, the voltage at the motor terminals must not drop below 90% of the rated reduced voltage.

The plant's power system should be reviewed prior to installation of the air compressor unit(s). A record of the supply voltage to the power transformer ($E_{incoming}$) should be measured on a chart recorder. If this incoming power is from the local utility, a record is usually available from the local power company. The minimum voltage should be used for the evaluation. The power transformer must be sized to minimize the voltage drop during start-up of the unit(s). If an existing power transformer is being used, the total load on the transformer must be reviewed. Voltage data from the transformer should be recorded. This data can be used to determine the approximate load on the transformer.

The equations below can be used to determine the expected voltage at the unit during start-up. The load on the power transformer and wires during start-up of the unit(s) must be used for the evaluation. Motors with a high full load amperage, low voltage (380V or 460V) are especially a concern in regard to voltage drops. The line in-rush current ($I_{in\text{-}rush}$) for the motor can be obtained from the supplier of the motor/starter (motor data sheet). If multiple units are involved, the evaluation must be based on a load at start-up for one unit plus the loads during normal operation of the additional units.

$$Voltage_{start\text{-}up} = E_{incoming} - (E_{transformer\ drop} + E_{wire\ drop})$$

$$E_{transformer\ drop} = \frac{(V)\ (KVA_{motor} + KVA_{other})\ (Z_{transformer})}{Rated\ \ KVA}$$

$$KVA_{motor} = \frac{(\sqrt{3})\ (V)\ (I_{in\text{-}rush})}{1000}$$

$$E_{wire\ drop} = \frac{(\sqrt{3})\ (Z_{wire})\ (L)\ (I_{in\text{-}rush})}{1000}$$

$E_{incoming}$	minimum voltage to the power transformer
V	rated voltage of motor
$I_{in\text{-}rush}$	line in-rush current during start-up of the unit
$Z_{transformer}$	impedance rating from transformer nameplate
Rated KVA	rated KVA from transformer nameplate
KVA_{other}	KVA load on transformer from other sources
Z_{wire}	impedance of wire
L	length of wire

If the line voltage during start-up ($Voltage_{start\text{-}up}$) is less than 90% of the motor's rated voltage OR less than 90% of the starter coil's rated voltage, the potential exists for damage to the starter and/or motor. In this case, the power system must be upgraded to ensure trouble-free operation of the units.

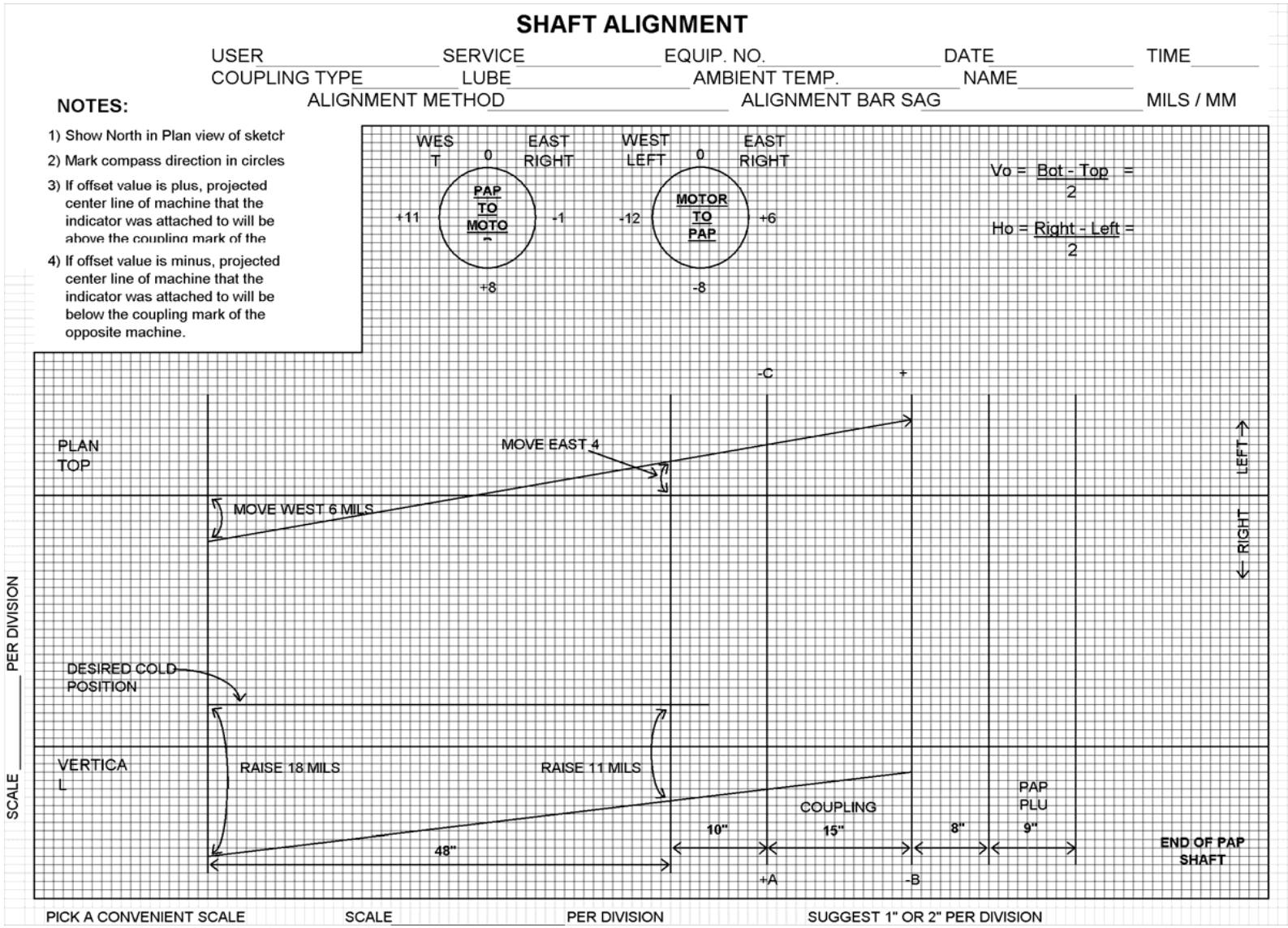

FIGURE 2-15
SHAFT ALIGNMENT EXAMPLE

USER _____ SERVICE _____ EQUIP. NO. _____ DATE _____

COUPLING TYPE _____ LUBE _____ AMBIENT TEMP. _____ NAME _____

NOTES: ALIGNMENT METHOD _____ ALIGNMENT BAR SAG _____ MILS/MM

1) Show North in Plan view of sketch.
2) Mark compass direction in circles.
3) If offset value is plus, projected center line of machine that the indicator was attached to will be above the coupling mark of the opposite machine.
4) If offset value is minus, projected center line of machine that the indicator was attached to will be below the coupling mark of the opposite machine.

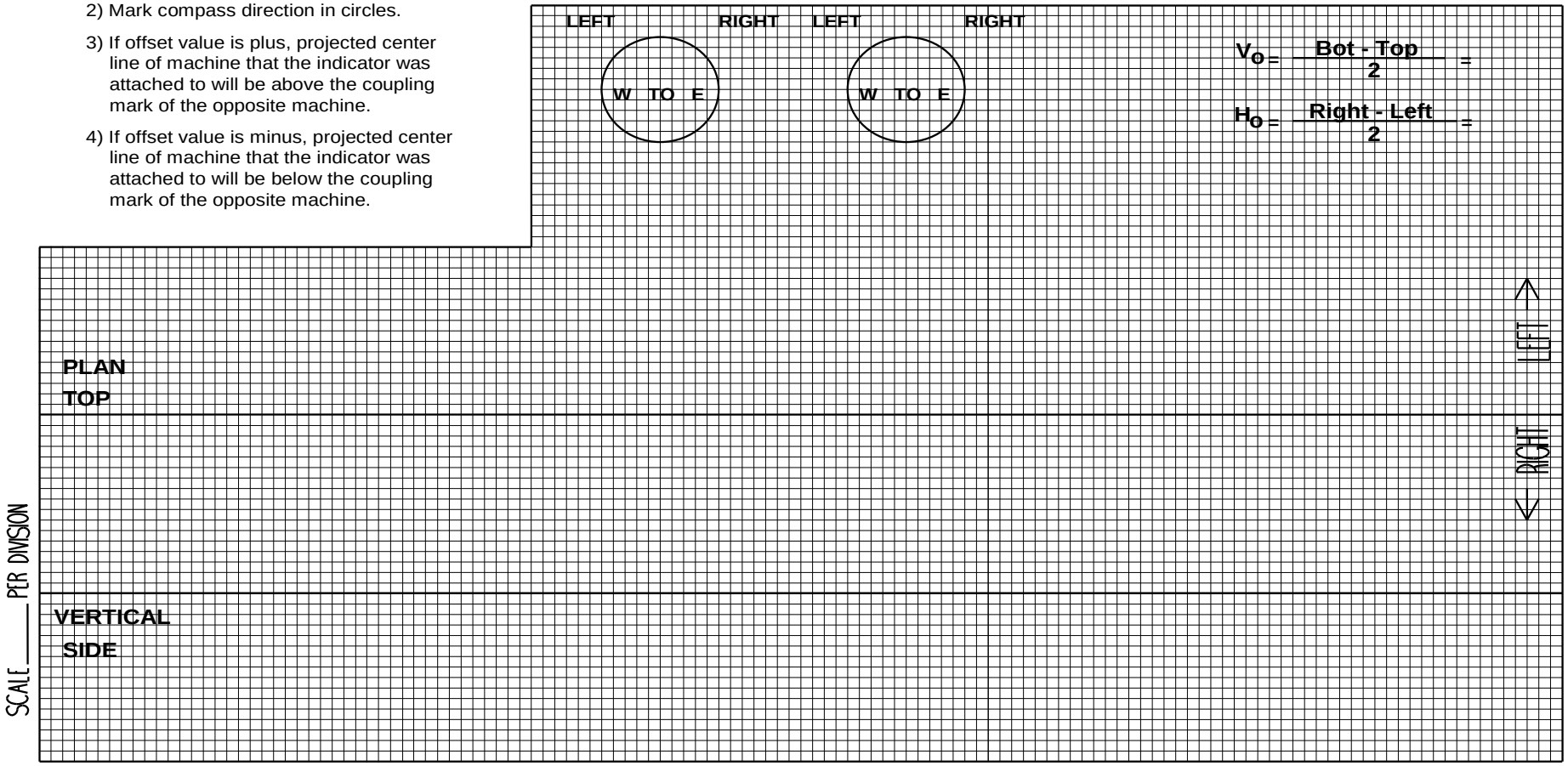

PICK A CONVENIENT SCALE SCALE _____ PER DIVISION SUGGEST 1" OR 2" PER DIVISION

FIGURE 2-16
SHAFT ALIGNMENT MAP

INSTALLATION / PRESTART CHECKLIST
With R1000 Control Panel
Form FSE 6061-820A
1/21/2015

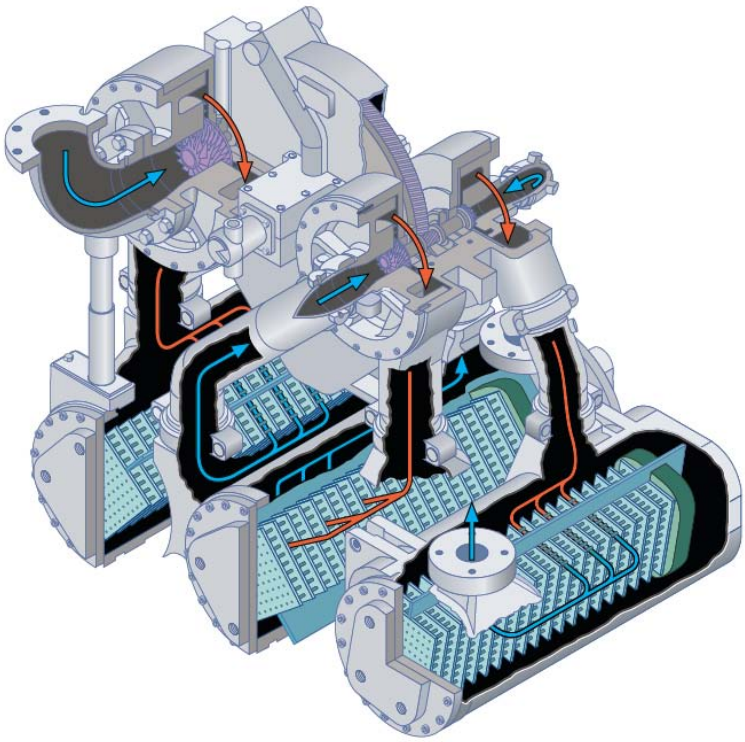

Customer: _____

Location _____

Field Representative _____

Factory Order: _____

Frame: _____

Date: _____

Comments:_____

INSTALLATION / PRESTART CHECKLIST
With R1000 Control Panel
Form FSE 6061-820A
1/21/2015

This checklist provides practical guidance as to the various checks and inspections that may be required to install and start a POLARIS+ air compressor. This list is not intended to provide 100% of the requirements that may actually be necessary to successfully install and commission a POLARIS+ compressor.

The services of an FS-Elliott service representative or an authorized distributor should be used for assistance. Questions prior to the rep's arrival may be directed to the distributor (or FS-Elliott field office).

Some items are listed in this form as being standard, optional, or provided by the customer. Refer to the documents specific to this factory order to find out what was actually to be provided by FS-Elliott.

Recommended settings, adjustment methods, and scope of supply can change from time to time as improvements are made.

Table of Contents

I. INITIAL INSPECTION AND GENERAL INFORMATION – The distributor or sales rep can initially review the arrival of the unit at the jobsite. The distributor or field representative should review again during installation. 3
II. INSTALLATION 5
- A. Inlet Air Piping (refer to Chapter 2 and Figure 2-1, in the technical manual) 5
- B. Discharge Air Piping (refer to Chapter 2 and Figure 2-2, in the technical manual) 6
- C. Water Piping to the Oil Cooler, the Intercoolers, and the Aftercooler (refer to Chapter 2 and Figure 2-4, in the technical manual). 6
- D. Condensate Drains from the Intercoolers and the Aftercooler (refer to Chapter 2 and Figures 2-3 and 2-5, in the technical manual). 7
- E. R1000 Control Panel 8
- F. Control Panel Functioning 9
- G. Oil Reservior (refer to Chapters 2 and 5) 10
- H. Lubrication System (refer to Chapters 2 and 5) 10
- I. Motor (refer to Chapter 8) 10
- J. Motor Starter Panel Wiring (refer to chapters 2 and 8) 11
- K. Motor Starter Functioning 11

III. START UP 12
- A. Prior to Initial Startup. 12
- B. Start Up 13
- C. Completion 13

IV. PRE-STARTUP INSPECTION OF AC MOTORS 14

Comments: _____

INSTALLATION / PRESTART CHECKLIST
With R1000 Control Panel
Form FSE 6061-820A
1/21/2015

I. INITIAL INSPECTION AND GENERAL INFORMATION – The distributor or sales rep can initially review the arrival of the unit at the jobsite. The distributor or field representative should review these again during installation.

Initials	*Date*	*Yes*	*No*		
		☐	☐	1	Does the customer have a copy of the technical manual?
		☐	☐	2	Are there any signs of any shipping damage or mishandling?
		☐	☐	3	Have pictures of any damage been taken and submitted?
				4	Date that compressor and parts were received at site. _____.
		☐	☐	5	Were parts inventoried?
		☐	☐	6	Was FS-Elliott advised of any shortages? If yes, when and by whom? Customer Name:_____. Advised FS-Elliott (name):_____. On:_____.
		☐	☐	7	Are there any signs of improper storage, rust, etc.?
		☐	☐	8	Are spare parts properly stored?
		☐	☐	9	Is unit subject to environmental extremes, dust, corrosives, moisture, etc.? Describe the area where the compressor is located and the source of the inlet air. Location: ☐Indoors, ☐Outdoors, ☐Clean, ☐Dirty, ☐Unacceptable Source: ☐Indoors, ☐Outdoors, ☐Clean, ☐Dirty, ☐Unacceptable
				10	What is the nature of the compressor's usage? ☐Continuous, ☐Weekly, ☐Daily, ___Starts/Day, ☐Standby, ☐ *other* _____.
				11	Operating Mode? ☐Suction Throttle, ☐Base Mode, ☐Ambient, ☐System (PBO)
				12	POLARIS^{+} Nameplate Data (located inside the control panel). Serial Number _____. Model _____. Rated Inlet Capacity _____cfm Rated Disch Press. _____ psig (gage)
		☐	☐	13	Has the customer's staff and the installing contractor reviewed and understood the technical manual and the proper installation procedure for the compressor? Refer to Chapter 2 in FS-Elliott technical manual.
		☐	☐	14	Was the utility list reviewed with customer? Refer to Equipment Data Section in FS-Elliott technical manual. Is power supplied to the oil heater, control panel, aux. oil pump, motor, motor space heaters, remote panel, etc.? Instrument air supplied? Water supplied at the correct temperature and pressure?
		☐	☐	15	Was the customer instructed on AC welding safeguards? **Caution** Welding on compressor package is normally not required for installation; however, if electric welding is required, alternating current should be used. Use of direct current may result in residual magnetism that could cause damage such as frosting of the bearings or may affect electrical runout. Additionally when welding, the electrical ground should be positioned as close as possible to the weld area. Minimize welding in vicinity of the control panel on compressors equipped with digital type control systems.

INSTALLATION / PRESTART CHECKLIST
With R1000 Control Panel
Form FSE 6061-820A
1/21/2015

		☐	☐	16	Is there adequate clearance around unit for maintenance? Refer to the outline drawing in Chapter 10. Look at intercooler tube bundle removal, lifting of top half of gearcase, removal of scroll/volute casings, removal of motor, opening of control panel and starter panel, removal of air filter housing.
		☐	☐	17	Are optional jack mounting pads being used? _____ Are the pads used properly? _____
		☐	☐	18	Is the baseplate level to within 1/16" over the length of the baseplate?
		☐	☐	19	Is there any nearby equipment vibration?

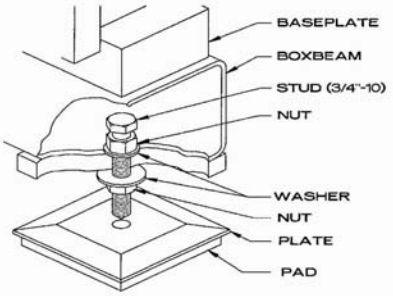

FIGURE 2-1
MOUNTING PAD

Comments: _____

INSTALLATION / PRESTART CHECKLIST
With R1000 Control Panel
Form FSE 6061-820A
1/21/2015

II. INSTALLATION

A. Inlet Air Piping (refer to Chapter 2 and figure 2-1, in the technical manual)

Initials	*Date*	*Yes*	*No*		
		☐	☐	1	Were all the rust inhibitors removed from the inlet piping? Desiccant bags for shipping prep are fastened to the inside of the inlet flange cover.
		☐	☐	2	Was the cleanliness of the piping interior verified? Remove Inlet filter for check.
		☐	☐	3	Was the inlet valve position checked before putting the inlet filter on the piping? Record % open _____ without power.
		☐	☐	4	Verify that the inlet valve actuator position WITH the panel power ON? Record % open _____without power.
		☐	☐	5	If purchased, was the optional differential pressure transmitter installed?
		☐	☐	6	Was a manometer installed?
		☐	☐	7	Was customer instructed on the proper monitoring and replacement of the inlet air filter?
		☐	☐	8	Is the filter housing easily accessible for maintenance?
		☐	☐	9	Did the customer remote mount the inlet filter? If yes, answer below.
		☐	☐	A	Is the filter housing properly located and installed? Minimum of 6 ft above roof or grade and no source of contamination nearby.
		☐	☐	B	Was the piping made from a material resistant to corrosion, flaking, or other problem that would cause impeller and diffuser erosion, and also be able to withstand the vacuum and surge pressure? Recommended pipe materials are stainless steel, rigid plastic, or aluminum.
		☐	☐	C	Is the piping size the same diameter or larger than inlet filter flange, and not necked down until 5 pipe diameters before inlet valve?
		☐	☐	D	Are all piping elbows long radius?
		☐	☐	E	Was the piping clean? (blowdown is recommended).
		☐	☐	F	Does the piping appear to have proper supports?
		☐	☐	G	Was the piping designed to minimize strain on the compressor?

Comments: _____

INSTALLATION / PRESTART CHECKLIST
With R1000 Control Panel
Form FSE 6061-820A
1/21/2015

B. *Discharge Air Piping* *(refer to Chapter 2 and figure 2-2, in the technical manual)*

Initials		*Date*	*Yes*	*No*		
			☐	☐	1	Were all the rust inhibitors (desiccant bags) (if any) removed from the discharge piping?
			☐	☐	2	Is the check valve installed in proper orientation and flow direction?
			☐	☐	3	Is a block valve installed between compressor and plant air system?
			☐	☐	4	Was customer instructed on when to use the block valve?
			☐	☐	5	Are all items installed in proper relation to each other per the technical manual? Refer to chapter 2 and figure 2-2. If not, then explain in detail in service report.

Comments: _____

C. *Water Piping to the Oil Cooler, the Intercoolers, and the Aftercooler*
(refer to Chapter 2 and figure 2-4, in the technical manual).

Initials	*Date*	*Yes*	*No*		
				1	What is the actual cooling water supply temperature? _____ ☐°F, ☐°C
		☐	☐	2	Is the actual water temperature the same as or less than design?
		☐	☐	3	Is the cooling medium ☐Water, ☐Glycol mixture, the same as the design? If Glycol mixture, then confirm it with the Field Office.
		☐	☐	4	Was customer instructed about the effects of above design water temperature on compressor performance?
		☐	☐	5	Are there strainers or filters in the inlet water lines to keep the supply water clean? Describe: _____.
		☐	☐	6	Are inlet and outlet water valves installed in the customer piping for maintenance isolation?
		☐	☐	7	Is the water flow direction to the headers correct? Water should go in on the bottom and out on the top to maintain water level in the tubes.
		☐	☐	8	Were any water leaks found? Describe: _____.
		☐	☐	9	Were these leaks corrected?

Comments: _____

INSTALLATION / PRESTART CHECKLIST
With R1000 Control Panel
Form FSE 6061-820A
1/21/2015

D. Condensate Drains from the Intercoolers and the Aftercooler

(refer to Chapter 2 and figure 2-3 and 2-5, in the technical manual).

Initials	*Date*	*Yes*	*No*		
				1	Are the condensate drain valves piped separately to an open drain that is accessible for operators? Figure 2-5. On first intercooler ☐ Yes ☐ No On final intercooler ☐ Yes ☐ No On aftercooler ☐ Yes ☐ No
		☐	☐	2	Was customer instructed on the purpose of the condensate drain valves? And the notched gates? Figure 2-3.
		☐	☐	3	Are optional intercooler drain mufflers used?
		☐	☐	4	If used, are they installed vertically?

Comments: _____

INSTALLATION / PRESTART CHECKLIST
With R1000 Control Panel
Form FSE 6061-820A
1/21/2015

E. R1000 Control Panel

Initials	*Date*	*Yes*	*No*		
		☐	☐	1	Is a panel heater or a cooler required?
				2	What is expected ambient temperature of panel? _____
		☐	☐	3	Is a panel heater and/or a cooler supplied?
		☐	☐	4	Were the shipped loose transmitters (if any) mounted? Refer to transmitter list on the Control Panel Configuration Sheet within Equipment Data section of technical manual and the connection diagram for field wired devices.
		☐	☐	5	Were the transmitters connected to the I/O block?
		☐	☐	6	Were the remote options (if any) properly wired?
		☐	☐	7	Was tubing connected to valves? 3/8" OD is recommended.
		☐	☐	8	Are the tubing connections at proper locations? Refer to pre-start manual.
		☐	☐	9	Is all necessary wiring completed (AC and DC)?
		☐	☐	10	Check for proper wiring connections?
		☐	☐	11	Ensure connections were made at proper terminal boards?
		☐	☐	12	Separate conduit for AC and DC wiring.
		☐	☐	13	Are separate AC and DC grounds connected? Make sure that no continuity exists.
		☐	☐	14	Were temperatures and pressures on the I/O signals screen checked to determine if transmitters were operational?
		☐	☐	15	Was proper operation of the digital inputs and outputs verified?
		☐	☐	16	Check the current date and time.
		☐	☐	17	Check setpoints against Control Panel Configuration sheet in technical manual. Record any changes in customer's technical manual.
		☐	☐	18	Are the instrument air connections supplied with clean dry air?
		☐	☐	19	Were any additional instrument air filters installed by customer?
		☐	☐	20	Were the control valves cycled from the panel?
		☐	☐	21	Perform a simulated start-up with driver isolated. Did the panel react in the correct manner? (driver fault)
		☐	☐	22	Did the panel react in a correct manner when the driver was started uncoupled?
		☐	☐	23	Was customer instructed on the alarm and trip point limits and their purpose?
		☐	☐	24	Was customer instructed on what to do to investigate the various alarms or trips (including driver fault)?

Comments: _____

INSTALLATION / PRESTART CHECKLIST
With R1000 Control Panel
Form FSE 6061-820A
1/21/2015

F. Control Panel Functioning.

Initials	*Date*	*Yes*	*No*		
		☐	☐	1	Were temperatures and pressures on the I/O signals screen checked to determine if transmitters were operational?
		☐	☐	2	Was proper operation of the digital inputs and outputs verified via the digital I/O signals screen?
		☐	☐	3	Set the current date and time.
		☐	☐	4	Check setpoints against the Panel Configuration Sheet located in the Equipment Data section of the technical manual. Record any changes in customer's technical manual. Change the mode to suction throttle. What is the max amps setpoint? _____.Design Surge MAT? _____. Safety Margin _____. . Note: the amps are set for the proper performance of the compressor. The motor may or may not be set to run in the service factor. If the amps are too high the compressor thrust bearings may be overloaded. If the amps are too low the compressor may not get enough flow and will surge. Change the mode back to as-found when done.
		☐	☐	5	Were the unloading and inlet valves cycled from the panel using manual mode? Observe the valve travel. Return them to auto mode when done.

Comments: _____

G. Oil Reservoir (refer to Chapters 2 and 5)

Initials	*Date*	*Yes*	*No*		
		☐	☐	1	Was the oil reservoir filled to the halfway level of the sight glass? . Add oil again after the piping has filled up.

Comments: _____

H. Lubrication System (refer to Chapters 2 and 5)

Initials	*Date*	*Yes*	*No*		
		☐	☐	1	Does the customer understand the results of running the auxiliary oil pump for more than a few minutes without the seal air buffer on? Oil may enter the carbon seals area.
		☐	☐	2	Is the rotation of auxiliary oil pump correct? If the pressure does not buildup when the electric power starts the pump motor, then reverse the motor leads.
		☐	☐	3	Was the main oil pump primed?
				4	What is the setting of oil reservoir heater? _____☐ °F ☐ °C Design is 100 to 125 °F.
		☐	☐	5	Were any oil leaks found?
		☐	☐	6	Were these leaks corrected?

Note: Check for leaks again while the compressor is running and is at operating temperature.
Note: Adjust the oil pressure while the compressor is running and is at operating temperature.

Comments: _____

I. Motor (refer to Chapter 8)

Initials	*Date*	*Yes*	*No*		
		☐	☐	1	Were the driver manual and the nameplates checked for special instructions (such as grease type)?
		☐	☐	2	Was this information reviewed with customer?
		☐	☐	3	Was a motor pre-start inspection checklist filled out? The checklist is located on the last page of this form.
		☐	☐	4	Was grease added to the motor bearings?

Comments: _____

INSTALLATION / PRESTART CHECKLIST
With R1000 Control Panel
Form FSE 6061-820A
1/21/2015

J. Motor Starter Panel Wiring (refer to Chapters 2 and 8)

Initials	Date	Yes	No		
		☐	☐	1	Has the customer supplied the proper disconnect switch for the starter panel?
		☐	☐	2	Were the power connections to A, B, and C in the motor starter wired correctly?
		☐	☐	3	Was the common AC ground bus inside the motor starter enclosure run to an appropriate earth ground.
		☐	☐	4	Does the customer use an optional remote medium voltage starter?
		☐	☐	A	Was it supplied by FS-Elliott?
		☐	☐	B	If a remote medium voltage starter is used, has the customer supplied the proper disconnect switch for this starter and does he understand the interface wiring connections to be made to the compressor motor and control panel? Refer to technical manual.

Comments: _____

K. Motor Starter Functioning

Initials	Date	Yes	No		
		☐	☐	1	Was the motor wiring to the contactors verified?
		☐	☐	2	Do all strands of one phase of motor power pass through the C.T. (current transformer) that goes to the motor amps transmitter (MAT)? Note: there are three other C.T.s in the starter panel that go to the overload trip.
		☐	☐	3	Make sure that the motor coupling is disconnected from the compressor until after the motor rotation direction is observed to be correct. Damage to the compressor bearings can result from reverse rotation.
		☐	☐	4	Make sure that the overloads/breaker is open. Attempt to start the motor from the FS-Elliott controller. Did the FS-Elliott controller react in a correct manner? (driver fault)
		☐	☐	5	Set the "low motor amps trip" on the FS-Elliott controller to a low value.
		☐	☐	6	Start the motor from the FS-Elliott controller. Was the rotation correct? If not then correct the motor leads to the contactors. See Chapter 2. Switch T1 and T2 on 1M contactor. And switch T6 and T4 on 2M contactor.
				7	Record the solo motor amps. _____.
		☐	☐	8	Compare solo amps to the low motor amp trip setting. Set the "low motor amps trip" back to the original value or higher (if necessary).
		☐	☐	9	Can the compressor drive shaft be rotated freely by hand? If it feels unusual, then investigate.
		☐	☐	10	Was the coupling reinstalled correctly?
				11	Record Overload class setpoint in starter cabinet. _____. Default is class 20, which allows 20 seconds for startup.
				12	Record Acceleration Time setpoint in starter cabinet. _____.

Comments: _____

INSTALLATION / PRESTART CHECKLIST
With R1000 Control Panel
Form FSE 6061-820A
1/21/2015

III. START UP

A. Prior to Initial Startup.

Initials	*Date*	*Yes*	*No*		
		☐	☐	1	If any discrepancies remain, present to the customer with a discrepancy sheet.
		☐	☐	2	Review safety precautions with the operator and supervisor. SAFETY PRECAUTIONS 1. Be sure all piping and electrical connections are made before operating the compressor. 2. Ensure that all valves, controls, trip and safety devices are in good operating condition. 3. Observe operating precautions outlined in the driver manufacturers instructions before starting. 4. Check that compressor drive shaft can be rotated by hand before starting. *(for the first time or after overhaul)* 5. If rubbing, vibration or unusual noises are detected during operation; stop the compressor immediately to determine and correct the cause.
		☐	☐	3	Was compressor startup method reviewed and understood by customer?
		☐	☐	4	Were proper operating log requirements established and provided to the customer?
		☐	☐	5	Was the purpose of the HOT MOTOR timer reviewed with customer supervisor?
		☐	☐	6	Was water flow to the coolers verified before start-up?
		☐	☐	7	Was the oil reservoir filled to the proper level?
		☐	☐	8	Was the FS-Elliott supplied seal air pressure regulator adjusted properly for the buffer air supply (4.5 psig). Buffer relief valve set to 6.5 psig. Reference P&I Diagram.
				9	Put the aux oil pump in circulate mode. What was the oil temperature before start-up? _____.
		☐	☐	10	Was the block valve closed to the system during startup and for the surge test?
		☐	☐	11	Verify I/V in auto mode, U/V in auto mode, and the Control Mode is Base Mode. The unit can also be started with U/V in manual mode if U/V is 100% open.
		☐	☐	12	Did the operator understand the purpose and the location of the emergency shutdown switch?

Comments: _____

INSTALLATION / PRESTART CHECKLIST
With R1000 Control Panel
Form FSE 6061-820A
1/21/2015

B. Start Up

Initials	*Date*	*Yes*	*No*		
		☐	☐	1	Customer to start-up unit per procedure found in operation section of technical manual.
				2	If high motor amps alarm occurs on startup then:
				A	Record actual time to Accelerate. _____.
		☐	☐	B	AND. Adjust the Acceleration Time in the FS-Elliott controller, if needed. Record new value _____. Default is 25 seconds.
		☐	☐	C	OR. Change Overload class setpoint in starter cabinet. _____. Change Acceleration Time setpoint in starter cabinet. _____.
		☐	☐	3	Attach a completed operating data sheet. Monitor compressor until temperatures stabilize..
		☐	☐	4	After start-up, adjust intercooler water manifold valves to maintain design interstage air temperature less than or equal to 15 °F above design water temperature.
		☐	☐	5	Adjust water flow to oil cooler. Record oil temperature _____ °F Determine if the AMOT (thermostatic oil mixing) valve appears to be working properly.
		☐	☐	6	Record oil pressure at normal operating temperature and adjust pressure valve (if needed). _____psig
		☐	☐	7	Were any oil leaks found?
		☐	☐	8	Were these leaks corrected?
		☐	☐	9	Determine discharge surge point and suction surge point. Include surge test record in service report.
		☐	☐	10	Put I/V in auto mode, U/V in auto mode, and set the Control Mode as desired by customer.
		☐	☐	11	Record operating data readings again after several hours run time.

Comments: _____

C. Completion

Initials	*Date*	*Yes*	*No*		
		☐	☐	1	Were operations personnel trained?
		☐	☐	2	Was customer instructed on the alarm and trip point limits and their purpose?
		☐	☐	3	Was customer instructed on what to do to investigate the various alarms or trips (including driver fault)?
		☐	☐	4	Were any remaining discrepancies documented using discrepancy sheet?
		☐	☐	5	Was compressor piping system schematic drawn and submitted with service report. (Document: piping sizes, valve/trap locations, receiver locations, etc. for water, compressor, instrument air, etc.)
		☐	☐	6	Document any oil leaks that were found (even if corrected by you) and e-mail information to mlantzy@fs-elliott.com Include drawings or sketches if possible. This is for the improvement of future units.

Comments: _____

INSTALLATION / PRESTART CHECKLIST
With R1000 Control Panel
Form FSE 6061-820A
1/21/2015

The office is to forward this page to Motor Vendor, if necessary.

IV. PRE-STARTUP INSPECTION OF AC MOTORS

FS-Elliott's Shop Order _____ Engineer's Name: _____
Customer: _____ Country: _____
City: _____ Date: _____ Frame: _____
Amps: _____ H.P. _____ R.P.M. _____ Volts: _____
Serial Number _____

VISUAL INSPECTION DATA

1. Date equipment arrived at jobsite ? _____
2. Is there shipping or storage damage ? Yes ☐ No ☐
3. Was motor stored indoors or outdoors ? Indoors ☐ Outdoors ☐
4. Was the shaft rotated periodically during storage? Yes ☐ No ☐
5. Were the space heaters energized during storage ? Yes ☐ No ☐
6. Is the shaft rusty ? Yes ☐ No ☐
7. Is there any sign of moisture damage to motor or in bearings ? Yes ☐ No ☐
8. Does the bearing grease show signs of moisture contamination ? Yes ☐ No ☐
9. What is the condition of the conduit box, leads, terminals, and auxiliary equipment ? _____

STATOR WINDING RESISTANCE

1. Stator Megger Readings _____ Meg Ohms with _____ Volt Megger

AUXILIARY EQUIPMENT

1. Are they connected and functioning? Yes ☐ No ☐
2. Space Heaters? Yes ☐ No ☐

RUNNING CONDITIONS

1. Is there any abnormal noise or vibration during start up or coast down ? Yes ☐ No ☐
2. Ambient Temperature ^{o}F
3. Record Motor Amps and Volts (3 phases)

uncoupled	amps	volts	**Loaded**	amps	Volts
A			A		
B			B		
C			C		

ANTIFRICTION BEARINGS

1. Do the bearings feel rough or sound noisy when motor shaft is turned by hand or while the motor is running? Yes ☐ No ☐
2. Do the conditions under which the motor was stored warrant re-greasing the bearings or changing them ? Yes ☐ No ☐
3. Was grease added to the bearings prior to start-up ? Yes ☐ No ☐ Amount in Ounces _____

Comments: _____

PRINCIPLE OF OPERATION

Filtered air (controlled by an automatically operated inlet control device) enters the compressor's first stage and is compressed. After initial compression, the air travels through an intercooler where heat and moisture are removed from the compressed air. After the air is cooled and dried, it enters the compressor's second stage and is further compressed. The air is then directed through a second intercooler to once again remove heat and moisture. Finally, the air enters the compressor's third stage, where it is compressed to the design discharge pressure and supplied to the plant air system.

The compressor's integral lubrication system supplies oil to the compressor bearings and gears, while the water system supplies cooling water to the intercooler tube bundles and the oil cooler.

The R1000 control system automatically positions the inlet control device to maintain the driver load within acceptable limits. Also, the unloading valve is automatically positioned to maintain the required discharge pressure. Protective devices are implemented within the control system to automatically shut down the compressor in the event that any of the operating parameters reach an unacceptable level.

Surge is a common characteristic of centrifugal compressors. Surge occurs when the compressor is unable to overcome the pressure of the plant air system. Surge may occur due to atypical design conditions or abnormal control operations. When the compressor experiences surge, the direction of airflow reverses. In the event of a surge, the control system automatically detects and eliminates the surge condition by unloading the compressor (unloading valve opens).

CAUTION

Continuous operation of the compressor in the surge condition will cause severe mechanical damage.

The R1000 control panel is responsible for positioning the inlet control valve, positioning the unloading control valve, sequencing start-up and shutdown events, governing different modes of operation, monitoring operating parameters, and providing alarm and trip indications. The control panel utilizes an electronic microprocessor to perform these functions. Communication with the microprocessor takes place via the R1000 operator interface located on the front of the control panel. Reference Chapter 6 (Control System) prior to operating the compressor.

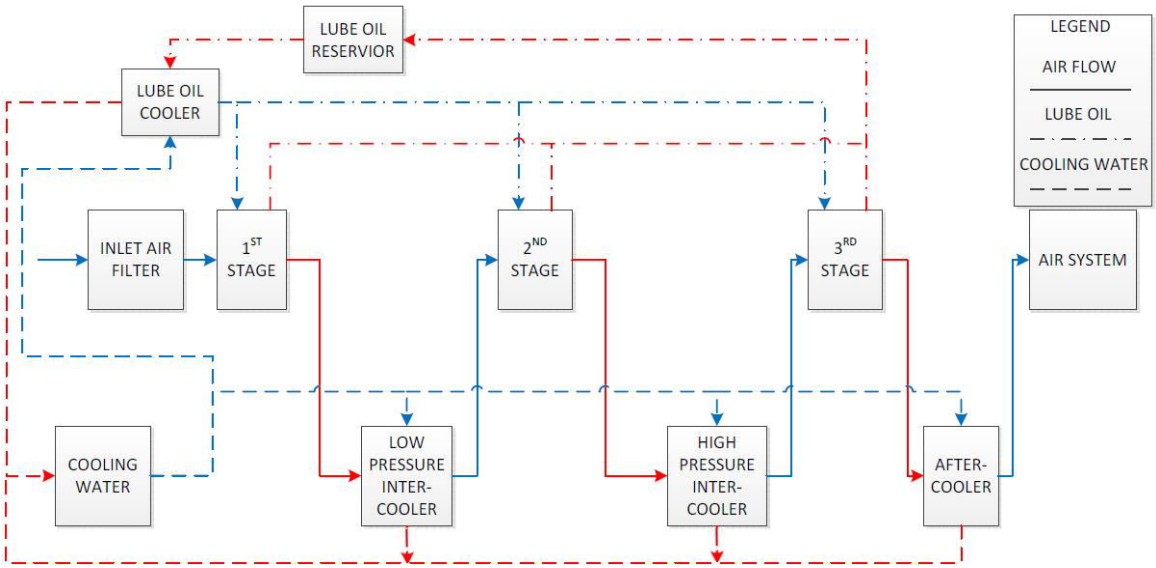

FIGURE 3-1
COMPRESSOR SYSTEM, BLOCK DIAGRAM

SAFETY PRECAUTIONS

1. Ensure all piping and electrical connections are secure before operating the compressor.

2. Ensure that all valves, controls, and the trip and safety devices are functioning correctly.

3. Review the operating precautions outlined in the driver's instruction manual before the driver is operated.

4. Verify that the compressor drive shaft can be rotated by hand before starting the compressor.

5. If rubbing, vibration, or unusual noises are detected during operation, stop the compressor immediately to determine and correct the cause.

6. Ensure control panel door is closed and in the locked position.

PREPARING FOR INITIAL START-UP

1. Disconnect the coupling between the compressor and driver.

NOTE
Gear type couplings must have the coupling sleeve secured to the coupling hub with an adapter during uncoupled operation.

2. Start the driver per the manufacturer's instructions and verify that the rotational direction of the driver shaft is correct.

3. Connect the coupling between the compressor and driver (lubricate coupling as necessary).

4. Inspect sight gage on oil reservoir for proper level. Should the oil level drop below the bottom of the oil level sight gage when the pump is operated, oil should be added until the level reaches the mid-point of the sight gage. Reference Chapter 5 (Lubrication Section) for details.

5. Ensure that the backplate deflections are within the acceptable limits. Contact your local FS-Elliott Distributor for assistance.

MANUAL START-UP VS. AUTOMATIC START-UP

Manual start-up requires an operator to physically push the necessary keys in order to start the compressor and supply air to the plant air system. Automatic start-up requires an operator to only initiate the panel. The control panel will then automatically start the compressor and supply air to the plant when the plant air pressure requires.

MANUALLY INITIATED START-UP

1. Turn on the air supply to the pneumatic control components and the seal air piping harness (if required).

WARNING

While operating the auxiliary oil pump, ensure that 4 to 6 psig (0.28 to 0.41 bar) seal air pressure is available. Otherwise, oil migration across the seals could occur introducing oil into the process piping.

2. Check the oil reservoir level and temperature. If necessary, add oil as described above. Heat the oil by circulating the auxiliary oil pump, if the temperature is less than 74°F (23°C). The optional oil heater should be configured to maintain the oil temperature at approximately 100°F (38°C).

3. Prime the main oil pump if the compressor is being started for the first time, or the main oil pump has currently been repaired or replaced.

   a. Remove the pipe plug from the suction side of the pump.
   b. Fill the pump and suction line with oil.
   c. Replace and tighten the pipe plug.

4. Turn on the air supply to the pneumatic control components and the seal air piping harness (if required).

NOTE

Temperature, pressure, and vibration transmitters are monitored for failure at all times. A fault with any of these transmitters will be annunciated on the R1000 interface and start-up will be prevented until the fault is corrected.

5. Push the (HOME) icon on the R1000 operator interface to access the Home Screen.

6. Then press the (ENERGY MODES) icon to access the Energy Mode Section Screen. The Energy Mode Section Screen contains five individual selection menus.

   a. ENERGY MODES
   b. PRESSURE CONTROL MODE
   c. START/STOP MODE
   d. AUTO UNLOAD
   e. INTEGRATED COMPRESSOR CONTROL (ICC)

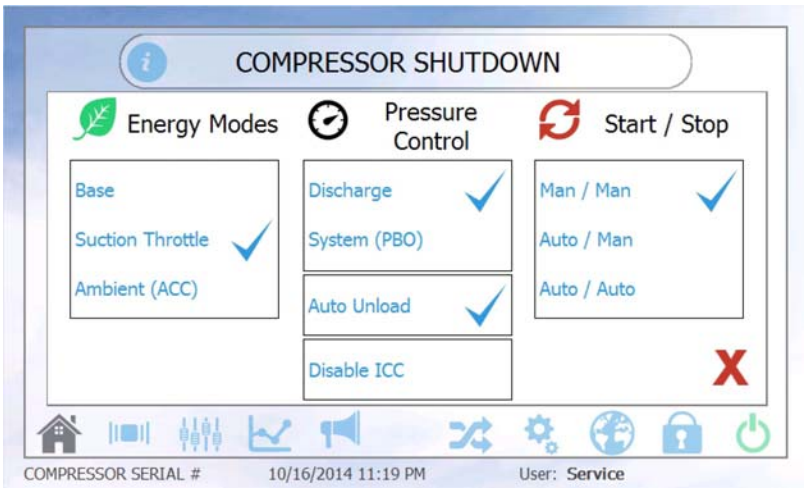

FIGURE 3-2
ENERGY MODE SCREEN

7. Operators can select the desired configuration that will satisfy their site's air demand by selecting the appropriate control configuration. A detailed description of Figure 3-2 can be found in Chapter 6.

8. After the appropriate energy mode selections have been made, push the X icon on the R1000 operator interface to return to the Home Screen.

9. Open the cooling water supply valves to the intercooler tube bundles.

10. Review the control system to confirm that all start permissives have been satisfied.

NOTE

If the Emergency Stop button is in the pushed-in position, the following message will appear at the top of the Home Screen: **RELEASE E-STOP**. If the **EMERGENCY STOP** button is in the pulled-out position, the following message will appear at the top of the operator interface: **COMPRESSOR SHUTDOWN**.

11. Push the (START ICON) icon on the bottom right side of the screen to initiate the start sequence. A screen will appear prompting the operator to either confirm or cancel the start command. Press the **OK** button to confirm the start-up procedure.

NOTE
If the start icon is displayed in yellow, a start permissive is not met.

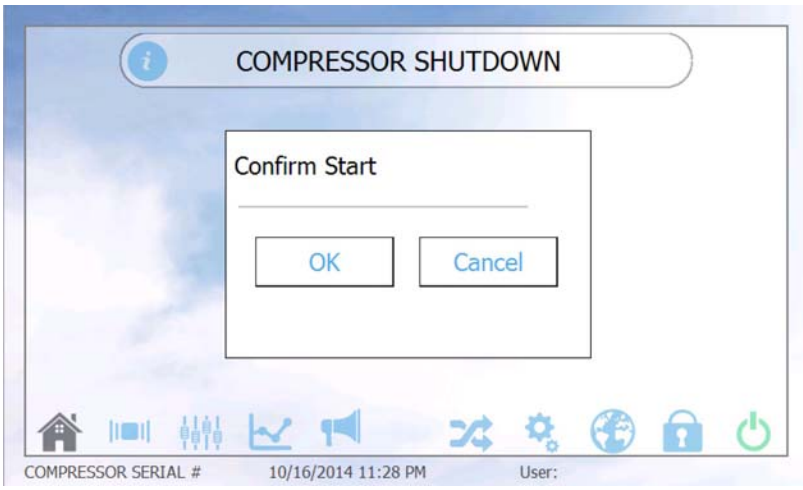

FIGURE 3-3
REFERENCE - START SEQUENCE

NOTE
If the start-up is successful, the following messages will appear at the top of the operator interface throughout the start-sequence:

a. Start Initialized
b. Compressor Starting
c. Compressor Accelerating
d. Compressor Loading
e. Compressor Running

12. The auxiliary oil pump will run upon initialization of the start command. Fifteen seconds after the AOP is started, the low oil pressure alarm and trip are enabled and the oil temperature is checked. If the oil temperature is 74°F (23°C) or greater, the driver is permitted to start. If the oil temperature does not exceed the permissive setpoint, the following message will appear at the top of the operator interface: COMPRESSOR COLD OIL. If the oil temperature does not exceed 74°F (23°C) within 20 minutes, the start-up sequence will be aborted.

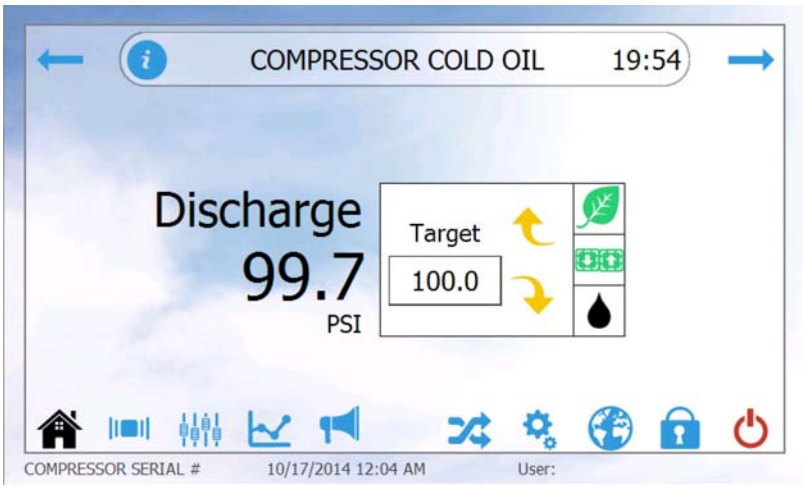

FIGURE 3-4
AOP ON – WAIT, COLD OIL

CAUTION

Operating personnel should stay clear of the coupling and rotating shafts while the control system is waiting for the oil temperature to reach 74°F (23°C). The driver will start automatically once the oil temperature reaches 74°F (23°C).

13. Twenty-five seconds after the motor starter is energized, the oil pressure is checked; the motor starter status is checked; and the motor current alarm is enabled. If the oil pressure is sufficient with both the AOP and Main Oil Pump (MOP) running together, the AOP automatically shuts off. If the oil pressure is not sufficient, the AOP remains on; the start-up sequence is aborted, and a main oil pump failure trip will be indicated on the operator interface.

    If the motor starter status indicates that the driver has not started, the microprocessor assumes a motor overload condition (etc.) exists, and the start sequence is aborted.

14. Five seconds later, the following events occur:

    a. The inlet and unloading valves are placed under control of the R1000. The inlet control valve modulates from its closed position. The unloading valve waits an additional 8 seconds to begin modulation to prevent a possible surge.

    b. The interstage air temperature alarm and trip are enabled.

15. The compressor is now running and will operate according to the selected energy modes.

OPERATIONAL CHECKS

Although the compressor is designed to operate autonomously, occasional monitoring and minor adjustment is necessary for safe and efficient operation:

1. Adjust intercooler water valves to maintain the design interstage air temperature 15°F (8°C) higher than the design cooling water inlet temperature. The design cooling water temperature is located on the Utility List located in the Equipment Data Section of this manual.

2. Check the oil reservoir level. Monitor the oil temperature and pressure. If necessary, adjust water flow through the oil cooler to maintain an oil temperature to the bearings of 115 - 125°F (46 - 52°C).

3. The intercooler drain valves are notched to allow constant moisture drainage. In some cases, it may be necessary to open the valves to ensure adequate drainage. Drain traps are optional and may be equipped.

CAUTION

Ensure that there is no moisture accumulation in the intercoolers during operation. Plugged or restricted drainage from the intercoolers will result in a rising water level and eventual water carry-over into the next stage of compression. Water in the air stream will damage impellers resulting in a loss of performance and vibration.

4. The operating personnel should record data approximately every 4 hours. An OPERATING RECORD SHEET is provided at the end of this chapter for this purpose. The operating data should be reviewed periodically. The data will alert the operating personnel of a maintenance problem such as a dirty oil cooler, etc. This will aid the operating personnel in scheduling maintenance shutdowns and reduce unexpected shutdowns that may be detrimental to the plant.

AUTOMATICALLY INITIATED START-UP

NOTE

Temperature, pressure, and vibration transmitters are monitored for failure at all times. A fault with any of these transmitters will be annunciated on the R1000 operator interface and prevent start-up until the fault is corrected.

1. Turn on the air supply to the pneumatic control components and the seal air piping harness (if required).

2. Check the oil reservoir level and temperature. If necessary, add oil as described above. Heat the oil but circulating the auxiliary oil pump, if the temperature is less than 74°F (23°C). The optional oil heater should be configured to maintain the oil temperature at approximately 100°F (38°C).

3. Prime the main oil pump if the compressor is being started for the first time, or the main oil pump has currently been repaired or replaced.

   a. Remove the pipe plug from the suction side of the pump.
   b. Fill the pump and suction line with oil.
   c. Replace and tighten the pipe plug.

4. Turn on the air supply to the pneumatic control components and the seal air piping harness (if required).

NOTE

Temperature, pressure, and vibration transmitters are monitored for failure at all times. A fault with any of these transmitters will be annunciated on the R1000 interface and start-up will be prevented until the fault is corrected.

5. Push the (HOME) icon on the R1000 operator interface to access the Home Screen.

6. Then press the (ENERGY MODES) icon to access the Energy Mode Section Screen. The Energy Mode Section Screen contains five individual selection menus.

   a. ENERGY MODES
   b. PRESSURE CONTROL MODE
   c. START/STOP MODE
   d. AUTO UNLOAD
   e. INTEGRATED COMPRESSOR CONTROL (ICC)

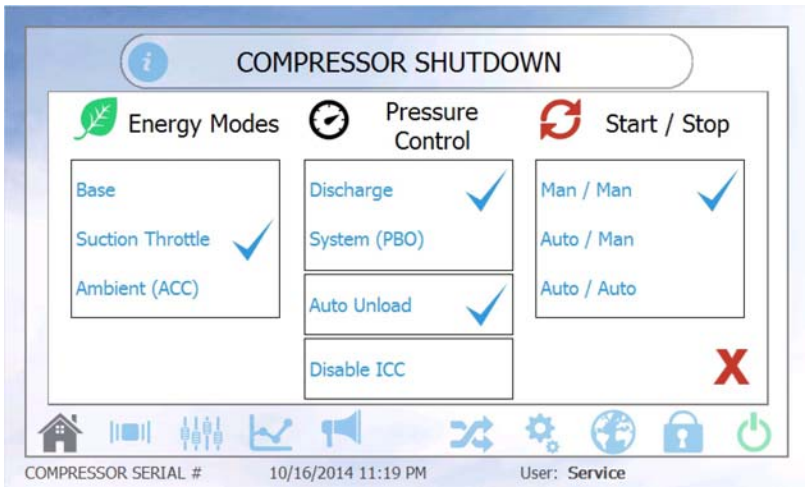

FIGURE 3-5
CONTROL MODE SCREEN

7. Operators can select the desired configuration that will satisfy their site's air demand by checking the appropriate control configuration. A detailed description of Figure 3-5 can be found in Chapter 6.

8. **AUTO/MANUAL** or **AUTO/AUTO** from within the Energy Modes Screen must be selected to permit an automatic start up. If automatic stop is required, **AUTO UNLOAD** must be selected in the Energy Modes Screen as well.

9. After the appropriate control mode selections have been made, push the X icon on the R1000 Touch Pad Screen to return to the Status Screen.

10. Open the cooling water supply valves to the intercooler tube bundles.

11. Open the manual block valve to the plant air system.

12. Review the control system to confirm that all start permissives are satisfied.

NOTE

If the Emergency Stop button is in the pushed-in position, the following message will appear at the top of the operator interface: **RELEASE E-STOP**. If the **EMERGENCY STOP** button is in the pulled-out position, the following message will appear at the top of the operator interface: **COMPRESSOR SHUTDOWN**.

13. Push the (START ICON) icon on the bottom right side of the screen to initiate the start sequence. A screen will appear prompting the operator to either confirm or cancel the start command. Press the **OK** button to confirm the start-up procedure.

NOTE

If the start icon is displayed in yellow, a start permissive is not met.

14. If the system pressure is above the SPT low system pressure start setpoint, the unit will be placed in stand-by mode and the following message will be displayed at the top of the operator interface: WAITING TO AUTOSTART.

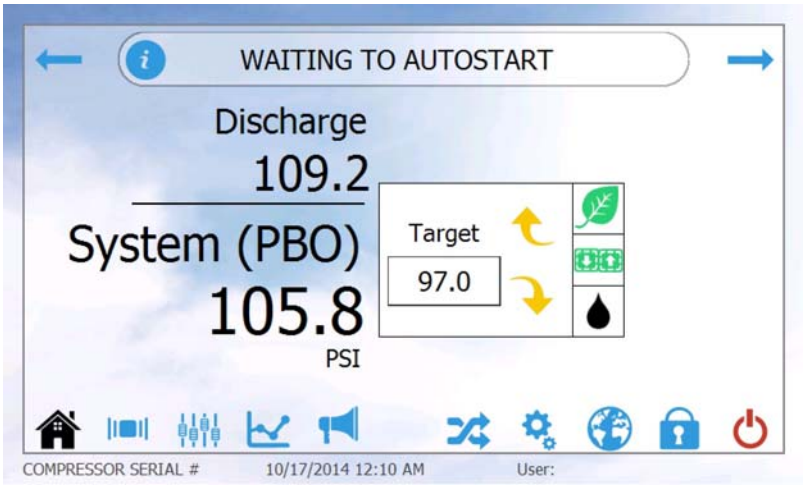

FIGURE 3-6
WAITING TO AUTOSTART

15. When the system pressure falls below the SPT low system pressure start setpoint, the auxiliary oil pump will start.

NOTE

The compressor will not auto start if it is shutdown manually or by an emergency shutdown. The automatic start sequence must be re-initiated for this mode of operation.

16. Fifteen seconds after the AOP is started, the low oil pressure alarm and trip are enabled and the oil temperature is checked. If the oil temperature is 74°F (23°C) or greater, the driver is permitted to start. If the oil temperature does not exceed the permissive setpoint, the following message will appear at the top of the operator interface: COMPRESSOR COLD OIL. If the oil temperature does not exceed 74°F (23°C) within 20 minutes, the start-up sequence will be aborted.

CAUTION

Operating personnel should stay clear of the coupling and rotating shafts while the control system is waiting for the plant air pressure to decrease. The driver will start automatically once the plant air pressure decreases to the SPT low system pressure start setpoint.

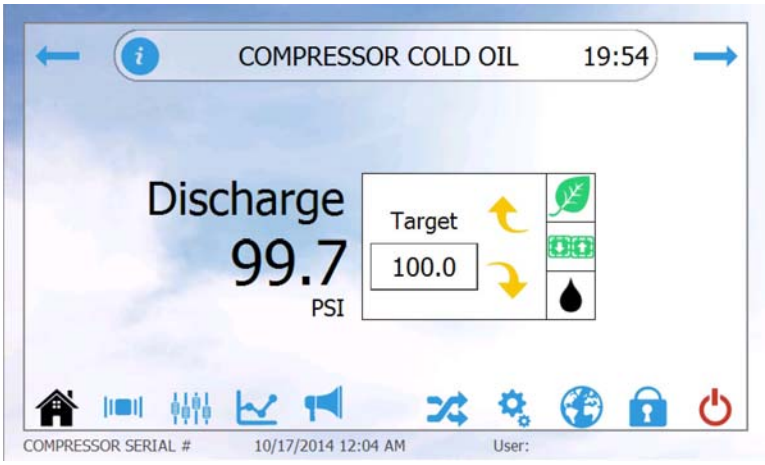

FIGURE 3-7
AOP ON – WAIT, COLD OIL

NOTE

The compressor will not autostart if the start-up sequence has been aborted due to the cold oil condition. The operator will have to manually launch the start-up sequence, at which time, the autostart feature will re-initiate.

17. Twenty-five seconds after the motor starter is energized, the oil pressure is checked, the motor starter status is checked, and the motor current alarm is enabled. If the oil pressure is sufficient with both the AOP and MOP running together, the AOP automatically shuts off. If the oil pressure is not sufficient the AOP remains on, the start-up sequence is aborted and a main oil pump failure trip will be indicated on the operator interface.

    If the motor starter status indicates that the driver has not started, the microprocessor assumes a motor overload condition (etc.) exists, and the start sequence is aborted.

18. Five seconds later, the following events occur:

a. The inlet and unloading valves are placed under control of the microprocessor. The inlet control valve modulates from its closed position. The unloading valve waits an additional 8 seconds to begin modulation to prevent a possible surge.

b. The interstage air temperature alarm and trip are enabled.

SEAL AIR SYSTEM

The seal air system provides pressurized air to the pinion seals. The pressurized air provides a barrier so that oil cannot leak into the compressed air system. The seal air system consists of a seal air blow-off regulator and an optional seal air supply regulator.

During normal operation of the air compressor unit, the last stage of compression provides a small amount of pressurized air into the seal air system. This air is provided to the pinion seals. The seal air blow-off regulator vents any excess air. The seal air blow-off regulator should be adjusted to 6-7 psig (0.41 to 0.48 bars).

EMERGENCY SHUTDOWN

1. The compressor will automatically shutdown should any of the following circumstances cause a trip condition:

   High Final Interstage Air Temperature
   Low Oil Pressure
   High Vibration Low Speed Pinion
   High Vibration High Speed Pinion
   Microprocessor Communication Fault
   Manual Emergency Trip
   Motor Current Transmitter Failure
   Oil Pressure Transmitter Failure
   Oil Temperature RTD Failure
   Interstage Air Temperature RTD Failure
   High Speed Pinion Vibration Transmitter Failure
   Low Speed Pinion Vibration Transmitter Failure
   Discharge Air Pressure Transmitter Failure

2. When an emergency shutdown command is received the following steps are automatically taken:

   a. The driver is shut down.
   b. The red trip light will flash and the horn will sound.
   c. The auxiliary oil pump will start.
   d. The unloading valve will open.

3. To access the Alarm/Trip Screen, press the (ALARMS/TRIPS) icon located at the bottom of the screen. All of the current alarms and trips are listed in chronological order. Figure 3-8 shows the Active Alarms and Trip Screen.

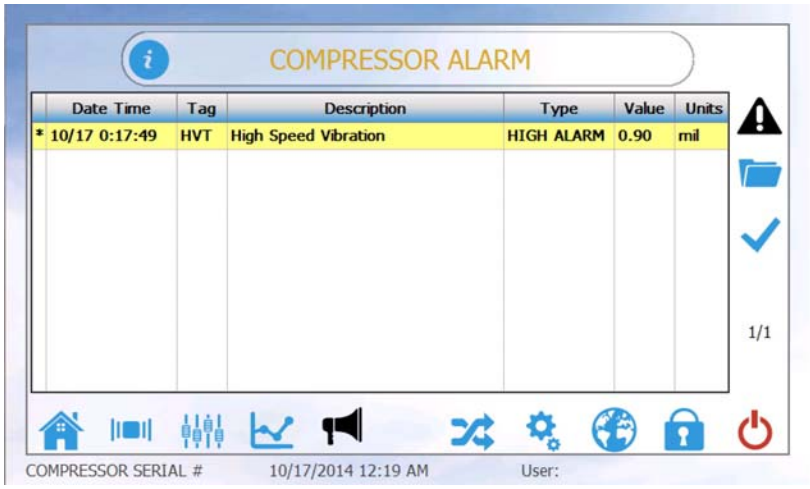

FIGURE 3-8
ACTIVE ALARMS AND TRIPS

4. Once the emergency shutdown command has been received, the compressor with enter a coastdown state, as shown in Figure 3-9.

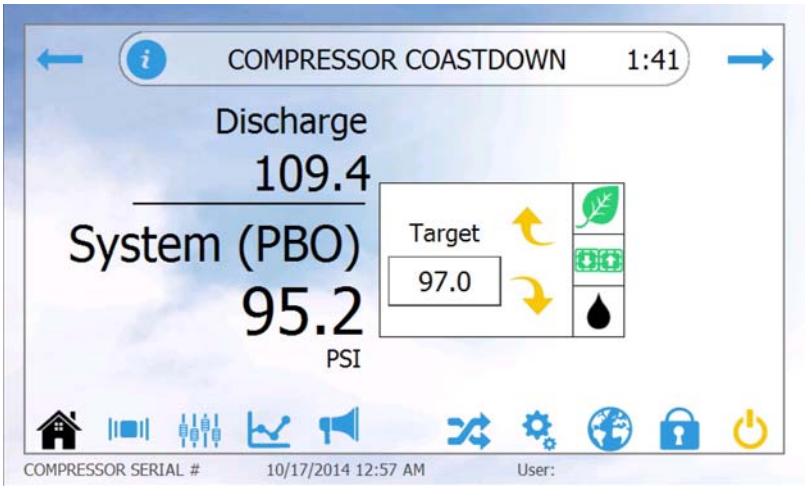

FIGURE 3-9
COASTDOWN

NOTE

The compressor coastdown timer is set for 120 seconds to prevent an attempted start-up while the driver is coasting down. A (COASTDOWN) message will appear at the top of the operator interface during the coastdown period.

5. Two minutes after the shutdown command is received, a compressor restart is permitted.

6. If a restart is not attempted, the AOP will remain on for an additional fifteen minutes for cooling purposes and then automatically shut down.

CAUTION

In cold weather climates it may be necessary to continue running the cooling water to prevent freeze-up of the oil cooler.

7. Close the manual system shut-off valve if the unit is not going to be restarted.

MANUAL SHUTDOWN

1. Slowly close the manual system shut-off valve to isolate the compressor from the plant air system.

CAUTION

Failure to close the manual system shut-off valve may lead to reverse rotation of the compressor (if the check valve was to fail).

2. Push the (STOP ICON) icon on the bottom right side of the screen to initiate the stop sequence. A screen will appear prompting the operator to either confirm or cancel the stop sequence. Press the OK button to continue the shutdown procedure, as shown in Figure 3-10.

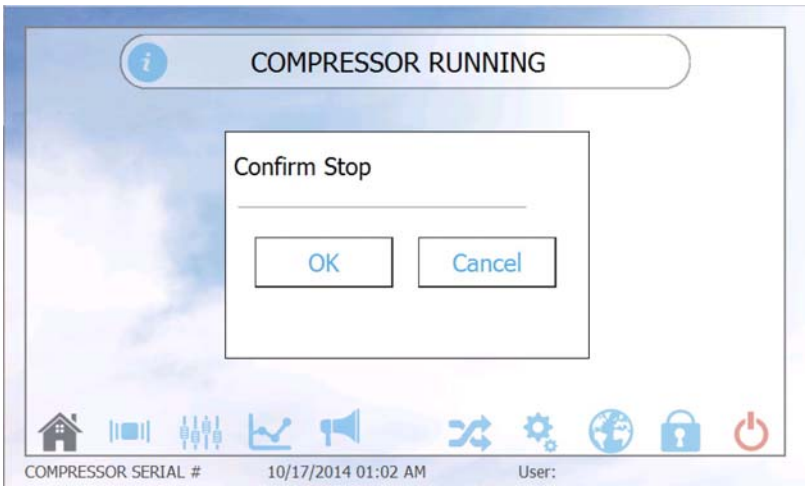

FIGURE 3-10
REFERENCE - STOP SEQUENCE

3. The following actions will take place:

   a. The unloading valve slowly opens and the inlet valve slowly closes causing unloading the compressor.

   b. Approximately 30 seconds later, the driver is shut down.

   c. All alarms and trips are disabled.

   d. The compressor coast down timer initiates. The timer is set for 120 seconds to prevent an attempted start-up while the driver is coasting down.

   e. If the shutdown sequence is successful, the following messages will appear at the top of the operator interface throughout the shutdown-sequence:

      I.) Compressor Unloading
      II.) Compressor Coastdown
      III.) Compressor Cooldown
      IV.) Compressor Shutdown

NOTE

If the operator encounters an emergency, pushing the EMERGENCY STOP push button on the front of the control panel will immediately unload the compressor and shut down the driver.

4. Two minutes after the shutdown command is received, the message Cooldown appears at the top of the operator interface, at which time a compressor restart is permitted. Reference Figure 3-11.

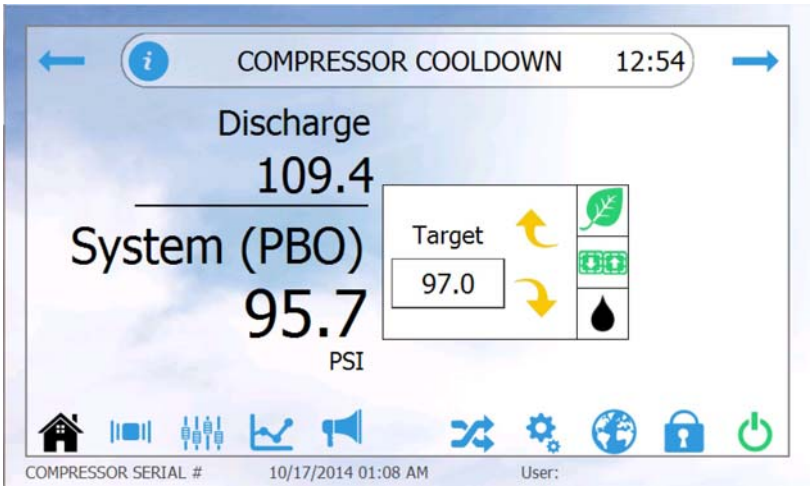

FIGURE 3-11
COOLDOWN

5. If a restart is not attempted, the AOP will remain operating for fifteen minutes for cooling purposes and then automatically shut down.

CAUTION

In cold weather climates it may be necessary to continue running the cooling water to prevent freeze-up of the oil cooler.

AUTOMATIC SHUTDOWN

The automatic stop feature is optional.

1. Push the (HOME) icon on the R1000 operator interface to access the Home Screen.

2. Then press the (ENERGY MODE) icon to access the Energy Modes Screen. The Energy Modes Screen contains five individual mode selection menus.

3. Enable the auto unload function, as shown in Figure 3-12

4. Select the desired operating mode (**AUTO/AUTO**) by pressing the appropriate selection in the **START/STOP MODE** menu, as shown in Figure 3-12.

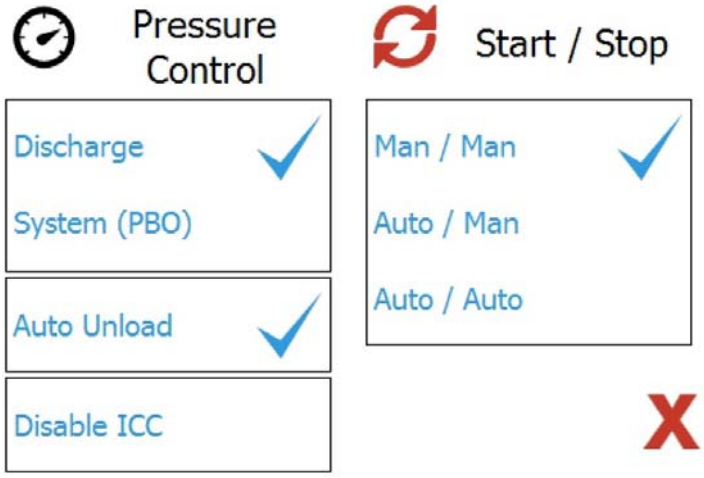

FIGURE 3-12
CONTROL MODES-START/STOP MODE

NOTE
Steps 1 - 3 are only required for initial configuration.

5. The compressor will now receive an automatic unload command once the UVT unload position setpoint has been surpassed, the plant air system demand is satisfied and the unload timer has expired (All listed parameters are adjustable to suit plant requirements).

6. Once the automatic unload command is received, the compressor's inlet valve will close and the unloading valve will open.

7. The compressor will continue running in an unloaded condition unit one of the following occurs:

   a. The system pressure drops below the low pressure start setpoint at which time the compressor will reload.

   b. The system pressure does not drop below the low pressure start setpoint within thirty minutes of the compressor unloading at which time the compressor receives a shutdown command.

8. When the shutdown command is received the following steps are automatically taken:

   a. The motor starter is de-energized to stop the motor.

   b. The auxiliary oil pump will start.

   c. The compressor coastdown timer initiates. The timer is set for 120 seconds to prevent an attempted start-up while the driver is coasting down.

   d. If the shutdown sequence is successful, the following messages will appear at the top of the operator interface throughout the shutdown-sequence:

      I.) Compressor Unloading
      II.) Compressor Coastdown
      III.) Compressor Cooldown
      IV.) Compressor Shutdown

9. After the two minutes coastdown period, the message Cooldown appears at the top of the screen, at which time a compressor restart is permitted. If system pressure has fallen below the low pressure start setpoint, the compressor will automatically restart.

10. If a restart is not attempted, the AOP will remain on for an additional fifteen minutes for cooling and then shut down automatically.

11. After coastdown, the unit will await an auto start command. The following screen will be displayed after the cooldown period:

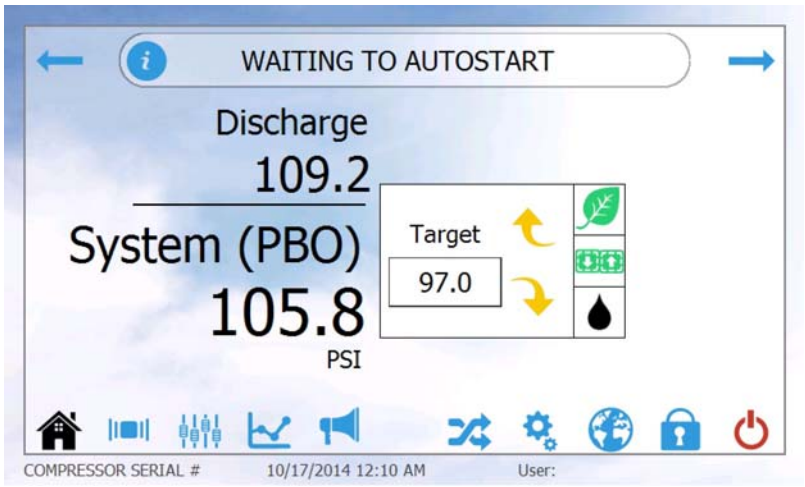

FIGURE 3-13
WAITING TO AUTOSTART

12. When the system pressure drops below the low pressure start setpoint, the compressor will automatically start.

ACKNOWLEDGING ALARMS & TRIPS

Alarms

The alarm action is activated when a monitored parameter has reached an unacceptable but not critical level of operation. This unacceptable level of operation will be brought to the attention of the operator via the horn, a yellow flashing common alarm light, and display on the operator interface.

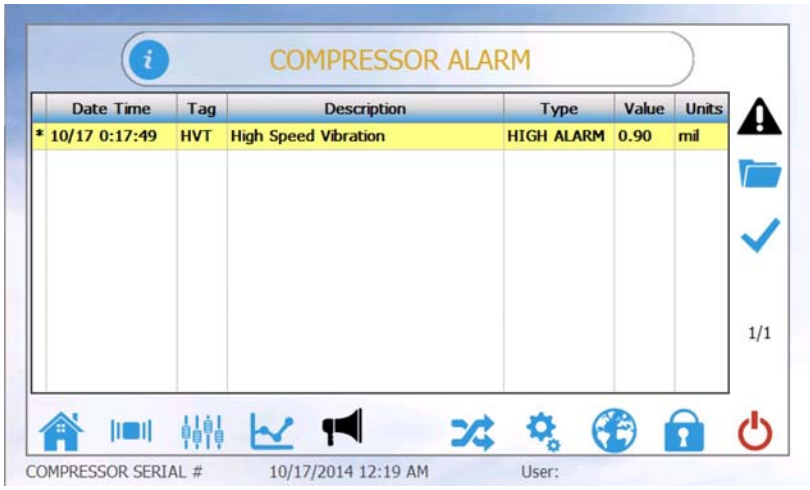

FIGURE 3-14
ACTIVE ALARMS AND TRIPS

1. To access the Alarm/Trip Screen, press the (Alarms/Trip) icon from the bottom of the screen. All of the current alarms and trips are listed in chronological order. Figure 3-14 shows the Active Alarms and Trip Screen.

2. Push the ✓ (ACKNOWLEDGE) and ✕ (RESET) icons as they appear on the right side of the ACTIVE ALARM AND TRIP Screen, once the alarm condition is corrected.

Trips

The trip function is activated when a monitored parameter has reached a critical and unsafe level of operation. This critical level of operation will immediately shut down the compressor, flash the red trip light, sound the horn, and display the parameter that caused the trip on the top of the screen and on the Trips and Alarms Screen. To acknowledge the trip:

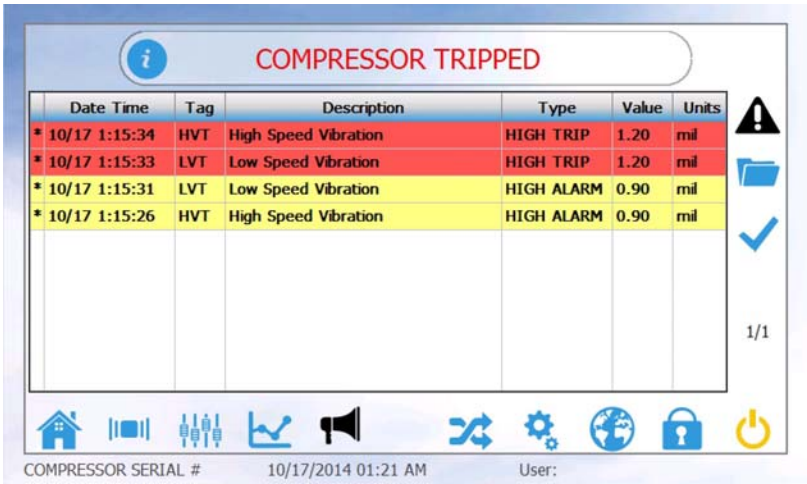

FIGURE 3-15
ACTIVE ALARMS AND TRIPS

1. To access the alarm/trip screen, press the (Alarms/Trip) icon from the bottom of the screen. All of the current alarms and trips are listed in chronological order. Figure 3-15 shows the Active alarms and trip screen.

2. Push the ✓ (ACKNOWLEDGE) and ✕ (RESET) icons as they appear on the right side of the ACTIVE ALARM AND TRIP Screen, once the trip condition is corrected.

SURGE DETECTION

Surge is a performance characteristic of a compressor that arises when the compressor cannot overcome the system resistance. When this happens, a flow reversal occurs until the compressor can again overcome the system resistance. Surge is usually associated with an excessive discharge pressure; however, excessive suction throttling can also cause surge. Surge Detection avoidance and testing is detailed in Chapter 6 of this manual.

CAUTION

Operating the unit in a surge condition can cause extensive damage to the compressor. The control system is equipped with safe guards to prevent continuous surge from occurring; however, if the compressor operates in a continuous surge condition (10 seconds or greater) press the E-STOP button to shut down the compressor.

INTEGRATED COMPRESSOR CONTROL STARTUP

Integrated Compressor Control (ICC) allows for automatic starting, sequencing, time leveling and lead/lag control of a multiple compressor arrangement. ICC is built into each R1000 control panel. This gives the operator the option of selecting any R1000 as the system's master controller. Establishing a network via Ethernet connections is required to utilize the ICC system (reference drawing SP1351). The procedure found below should be followed to configure the ICC network. The ICC network should not be configured and/or started until all of the following steps have been completed on each compressor in the network:

1. Tune valve operation while in base mode control (contact an FS-Elliott service representative for assistance if necessary).
2. Tune the suction throttle PID (contact an FS-Elliott service representative for assistance if necessary).
3. Setup the surge line via the Surge Line Calculation Screen and tune the pressure band optimization PID (contact an FS-Elliott service representative for assistance if necessary).

NOTE

If the pressure band is too large, cycling can occur depending on the site system characteristics.

A detailed description of the control theory, setpoints and timers for ICC can be found in Chapter 6 of this manual.

NETWORK CONFIGURATION

1. Decide which compressors will be configured to your network.

2. Select a compressor and log into the R1000 as an operator user (reference Chapter 6 of this manual for login details).

3. Once logged in, access the Information Screen via the icon located at the top of the operator interface. Use the and icons to scroll to the Setup Communication Screen and then select the Ethernet button to access the screen shown in Figure 3-16.

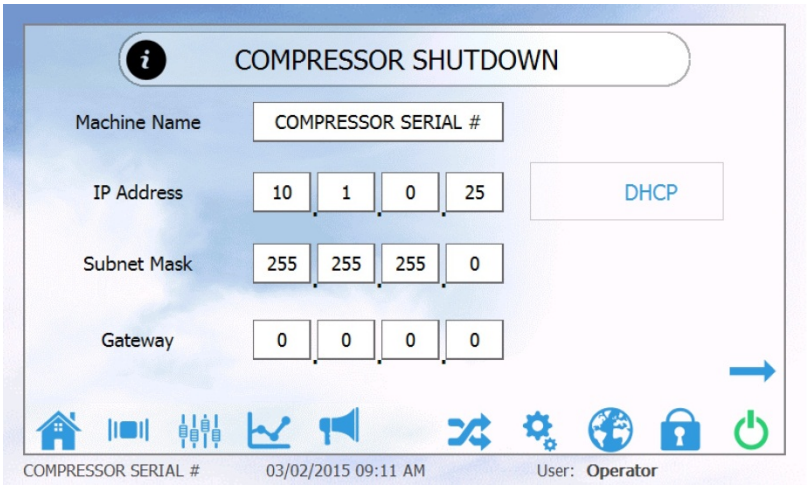

FIGURE 3-16
ETHERNET SETUP SCREEN

4. Confirm that the correct machine name has been entered into the machine name field.

NOTE
Machine names should be the compressor serial numbers (i.e., BXXXXXXXX -1, BXXXXXXXX -2, BXXXXXXXX -3).

5. Enter an IP Address.

NOTE
The ICC network is a standalone network. Therefore, any IP address can be used. For example 10.1.0.25 can be used for the first compressor being configured. This same address should be used on any subsequent compressor in the network with the expectation of the last digits (i.e. on the second compressor use 10.1.0.26, on the third 10.1.0.27 and so on).

6. Enter a subnet mask.

NOTE
Use 255.255.255.0 on each compressor in the network.

7. Press the → icon to return to the Setup Communication Screen.

8. Repeat the above procedure for the remaining compressors.

9. Once IP addresses have been assigned to all compressors, select the compressor you wish to act as the master and access its operator interface. Configuring the ICC network from this compressor will automatically make it the master.

10. Press the icon to access the ICC Home Screen as shown in Figure 3-17.

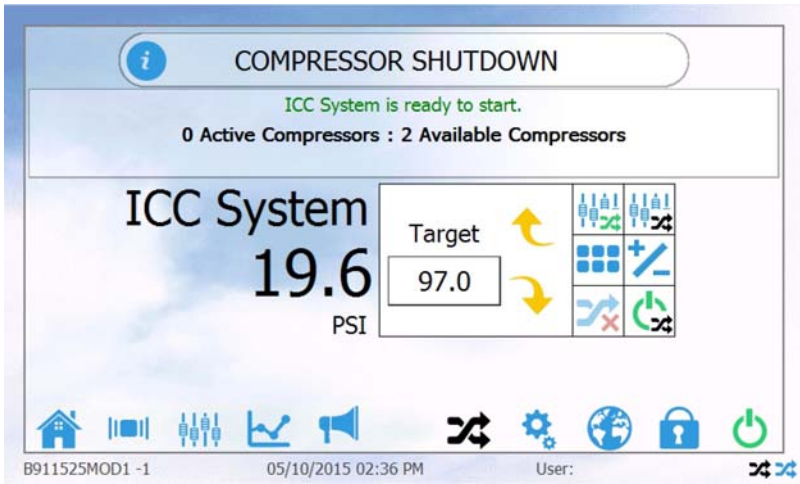

FIGURE 3-17
ICC HOME SCREEN

11. Once at the ICC Home Screen, ensure that the enable/disable ICC icon is enabled (should be displayed), now select the icon to access the Unit Availability Screen. The Unit Availability Screen will display all compressors currently configured within your ICC network as shown in Figure 3-18.

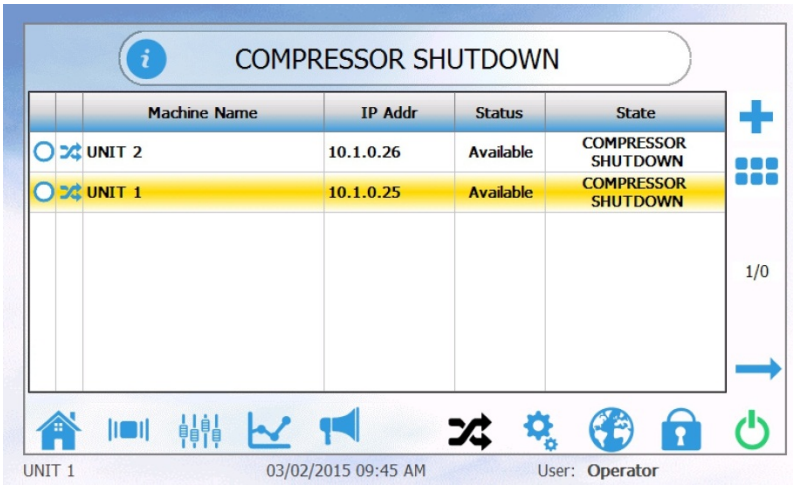

FIGURE 3-18
UNIT AVAILABILITY SCREEN - AVAILABLE UNITS

12. Select a compressor you wish to add to your network of sequenceable machines and press the icon to add it to your sequenceable machine list. Repeat this process and add all desired compressors to be sequenced.

NOTE

The order that the compressors were added to the sequenceable machine list will be the initial start, stop and unload order.

13. Once all desired compressors have been added, verify that one master is shown and the rest of the compressors are slaves. Reference Figure 3-19.

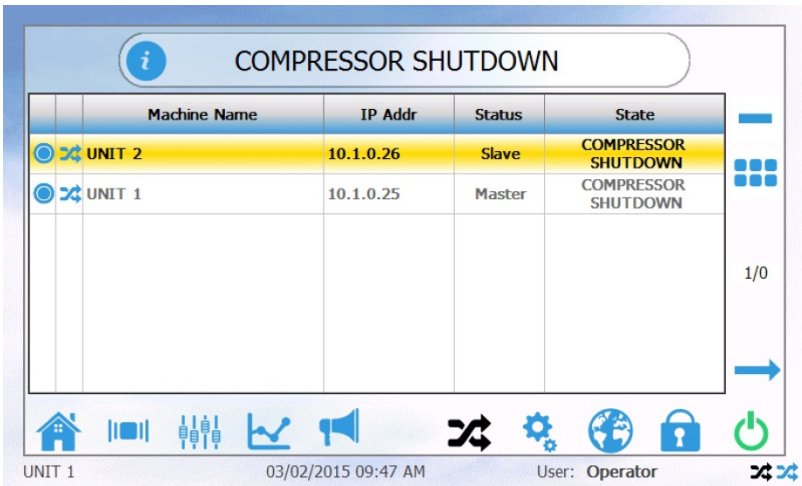

FIGURE 3-19
UNIT AVAILABILITY - CONFIGURED NETWORK

14. Once the network configuration has been verified press the icon to return to the ICC Home Screen.

SYSTEM CONFIGURATION

1. On the Master controller, access the ICC Master Control Settings Screen by pressing the icon and enable the sequencing on feature as shown below in Figure 3-20.

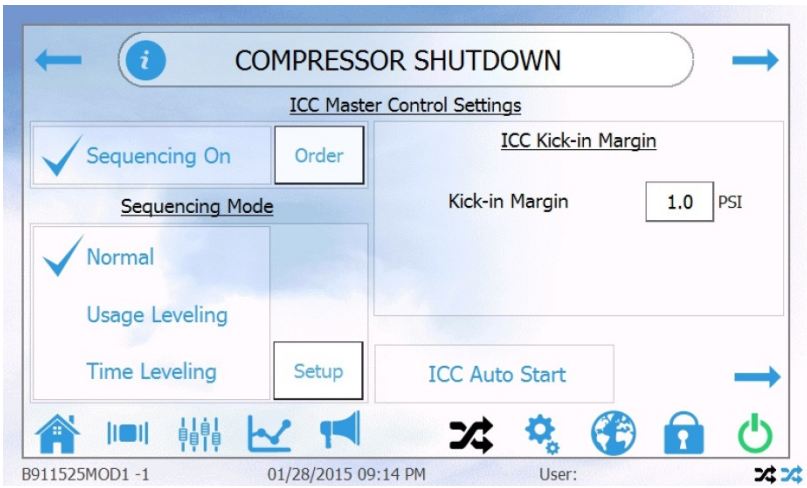

FIGURE 3-20
ICC MASTER CONTROL SETTINGS

2. Select the Order button to access the ICC Sequence Order. Use the and arrows to arrange the compressors in the desired order. Once the compressors are in the desired order press the apply button. Return to the ICC master control settings the screen by pressing the icon.

3. On the ICC Master Control Settings Screen, select the desired sequencing mode and set the ICC kick-in margin to the desired pressure (see Chapter 6 of this manual for kick-in margin details).

4. Use the icon located at the top of the operator interface to scroll to the next ICC Master Control Settings Screen. Configure the parameters to the desired values (see Chapter 6 of this manual for parameter details). Reference Figure 3-21.

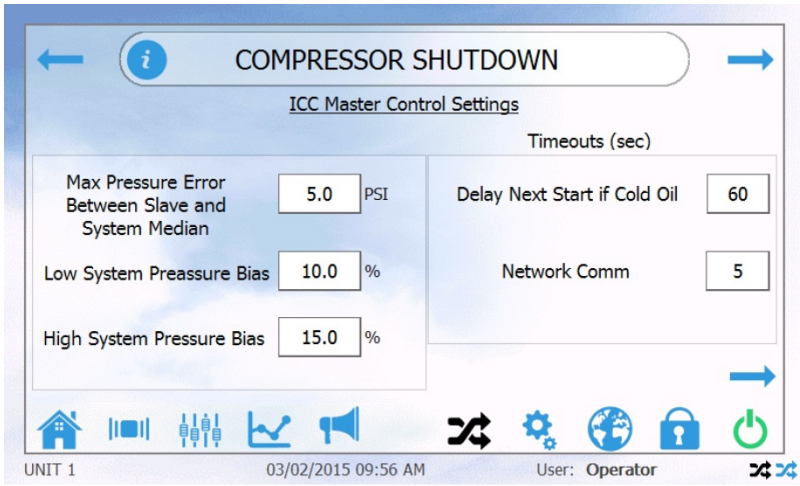

FIGURE 3-21
ICC MASTER CONTROL SETTINGS

5. Use the icon located at the bottom of the operator interface to return to the ICC Home Screen.

6. On the ICC Home Screen, set the ICC system target to the desired system pressure setpoint.

7. Once the master setup has been completed, access the ICC Slave Control Settings Screen on the master control panel by pressing the icon. Configure the ICC slave control settings to the desired values (see Chapter 6 of this manual for slave settings details). Reference Figure 3-22.

NOTE

The ICC slave control settings will need to be configured on each compressor including the master.

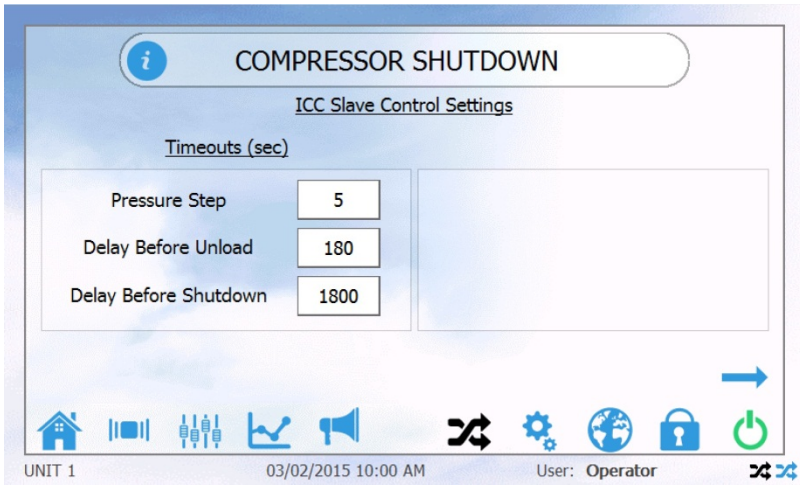

FIGURE 3-22
ICC SLAVE CONTROL SETTINGS

8. Use the → icon located at the button of the operator interface to return to the ICC Home Screen.

ICC START UP

1. Once the ICC network and system configurations are completed, re-verify that all of the individual compressors have been commissioned and pressure band optimization surge line calculations have been determined on each compressor. This verification should be completed on all compressors operating under ICC control.

2. Once the verification has been completed, the ICC system can be started. To start the ICC system, press the icon located on the ICC Home Screen as shown in Figure 3-23.

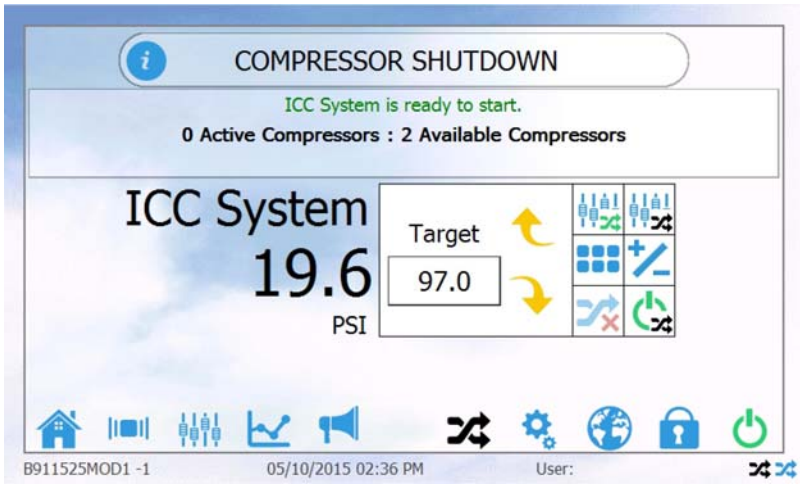

FIGURE 3-23
ICC HOME SCREEN

OPERATING RECORD SHEET
R1000 Control Panel-English

Customer:			Factory Order:				
Reported by:			Service Order:			Date:	
Energy Mode:	Base	Suction Throttle	Ambient	(Circle One)			
Pressure Mode:	Discharge	System (PBO)		(Circle One)			
Start/Stop Mode:	Man/Man	Auto/Man	Auto/Auto	(Circle One)			
Abbv	***Description***		***Units***				
Date							
Time							
	STANDARD						
DPT	Compressor Discharge Pressure		*(psig)*				
SPT	System Air Pressure		*(psig)*				
OPT	Inlet Oil Pressure		*(psig)*				
SAPT	Seal Air Pressure		*(psig)*				
IAT	Final Interstage Air Temperature		*(Deg. °F)*				
IOT	Inlet Oil Temperature		*(Deg. °F)*				
HVT	High Speed X-axis Rotor Vibration		*(mils)*				
LVT	Low Speed X-axis Rotor Vibration		*(mils)*				
MAT	Motor Current		*(Amps)*				
UVT	Unloading Valve Position		*(% Open)*				
IVT	Inlet control device Position		*(% Open)*				
IGV	Inlet Guide Vane Position		*(% Open)*				
	Total Run Time		*(Hours)*				
	Panel Power Time		*(Hours)*				
	OPTIONAL						
IMT	Inboard Motor Bearing Temperature		*(Deg. °F)*				
OMT	Outboard Motor Bearing Temperature		*(Deg. °F)*				
SMT	Motor Stator Temperature 1		*(Deg. °F)*				
FIT	First Interstage Air Temperature		*(Deg. °F)*				
ACT	Aftercooler Air Temperature		*(Deg. °F)*				
ATT	Inlet Air Temperature		*(Deg. °F)*				
FDT	First Stage Discharge Air Pressure		*(psig)*				
SDT	Second Stage Discharge Air Pressure		*(psig)*				
	Air Filter Differential Pressure		*(in WC)*				
	Oil Filter Differential Pressure		*(psid)*				
	Cooling Water Flow Pressure		*(psig)*				
HVT-2	High Speed Y-axis Rotor Vibration		*(mils)*				
Reservoir Oil Level			*(High/OK/Low)*				
Motor AC			*(Volts)*				
Seal Air Pressure			*(psig)*				
First Intercooler Drain Operating?			*(Yes/No)*				
Second Intercooler Drain Operating?			*(Yes/No)*				

NOTES

OPERATING RECORD SHEET
R1000 Control Panel-Metric

Customer:			Factory Order:				
Reported by:			Service Order:		Date:		
Energy Mode:	Base	Suction Throttle	Ambient	(Circle One)			
Pressure Mode:	Discharge	System (PBO)		(Circle One)			
Start/Stop Mode:	Man/Man	Auto/Man	Auto/Auto	(Circle One)			
Abbv	***Description***		***Units***				
Date							
Time							
	STANDARD						
DPT	Compressor Discharge Pressure		*(BARS)*				
SPT	System Air Pressure		*(BARS)*				
OPT	Inlet Oil Pressure		*(BARS)*				
SAPT	Seal Air Pressure		*(BARS)*				
IAT	Final Interstage Air Temperature		*(Deg. ℃)*				
IOT	Inlet Oil Temperature		*(Deg. ℃)*				
HVT	High Speed X-axis Rotor Vibration		*(μM)*				
LVT	Low Speed X-axis Rotor Vibration		*(μM)*				
MAT	Motor Current		*(Amps)*				
UVT	Unloading Valve Position		*(% Open)*				
IVT	Inlet control device Position		*(% Open)*				
IGV	Inlet Guide Vane Position		*(% Open)*				
	Total Run Time		*(Hours)*				
	Panel Power Time		*(Hours)*				
	OPTIONAL						
IMT	Inboard Motor Bearing Temperature		*(Deg. ℃)*				
OMT	Outboard Motor Bearing		*(Deg. ℃)*				
SMT	Motor Stator Temperature 1		*(Deg. ℃)*				
FIT	First Interstage Air Temperature		*(Deg. ℃)*				
ACT	Aftercooler Air Temperature		*(Deg. ℃)*				
ATT	Inlet Air Temperature		*(Deg. ℃)*				
FDT	First Stage Discharge Air Pressure		*(BARS)*				
SDT	Second Stage Discharge Air Pressure		*(BARS)*				
	Air Filter Differential Pressure		*(Cm/WC)*				
	Oil Filter Differential Pressure		*(BARS)*				
	Cooling Water Flow Pressure		*(BARS)*				
HVT-2	High Speed Y-axis Rotor Vibration		*(μM)*				
Reservoir Oil Level			*(High/OK/Low)*				
Motor AC			*(Volts)*				
Seal Air Pressure			*(BARS)*				
First Intercooler Drain Operating?			*(Yes/No)*				
Second Intercooler Drain Operating?			*(Yes/No)*				

NOTES

INTRODUCTION

This chapter furnishes disassembly, assembly, inspection and adjustment instructions for the Polaris P300 compressor package. These instructions must be followed to assure effective repair work and proper adjustment of components requiring service.

WARNING

OBSERVE ALL SAFETY PRECAUTIONS AND FOLLOW SOUND ENGINEERING PRACTICES WHEN PERFORMING MAINTENANCE. CLOSE, LOCK AND TAG ALL AIR SYSTEM ISOLATING VALVES TO PREVENT FROM BEING OPENED. ALSO, ENSURE DRIVER AND AUXILIARIES ARE ISOLATED FROM ALL UTILITIES TO PREVENT ACCIDENTAL STARTING DURING MAINTENANCE.

NOTE

Contact your distributor or the nearest FS-Elliott office at www.fs-elliott.com for professional maintenance services and original spare parts.

SCHEDULED MAINTENANCE

Scheduled maintenance inspections are necessary for safe and efficient operation. Actual intervals between inspections are not specified in this manual because maintenance scheduling is dependent on factors best known by those directly involved with the Polaris P300 and its particular application. Table 4-1 serves as a general guideline for establishing a scheduled preventative maintenance program.

Frequency of maintenance inspections can be determined only after careful consideration of Polaris P300 performance records, maintenance history, corrosion/erosion rates, tests, observations and anticipated service demands. The established inspection schedule will usually have to be consistent with the availability of the Polaris P300, necessary manpower and an adequate supply of repair parts. At the same time, inspections must be frequent enough to prevent unsafe operating conditions from developing.

It is also necessary to test and adjust all safety and protective devices, on a regular schedule, to ensure reliability. These devices are designed to prevent injury to personnel and/or major equipment damage. These devices may not work when needed If not tested at frequent intervals.

NOTE

During a power outage when power to the auxiliary oil pump is lost, the main motor will wind down thus providing enough momentum to rotate the bull gear and main oil pump to provide adequate lubrication to the compressor gearing and will prevent mechanical damage. However, it is recommended to inspect the bearings after a power outage to insure good working order of the bearings.

TABLE 4-1
MAINTENANCE GUIDELINES SCHEDULE

APPROXIMATE FREQUENCY		DESCRIPTION	REFERENCE
Quarterly	1.	Check for oil and water leaks. Tighten and replace if necessary.	
	2.	Check oil level in reservoir.	Chapter 5
	3.	Record a set of operating data.	Chapter 2
	4.	Inspect condensate drain valves / auto drain traps (as applicable).	
	5.	Measure and record vibration data on compressor and driver. Compare with baseline data.	Chapter 6
	6.	Download alarm, trip and historical data.	Chapter 6
	7.	Inspect inlet air pre-filter (1st stage). Replace if necessary.	Chapter 8
	8.	Inspect instrument air filter (as applicable). Replace if necessary.	Chapter 8
Semi-Annual		**(Include above quarterly inspections)**	
	1.	Inspect oil mist eliminator element. Replace if necessary.	Chapter 5
	2.	Inspect oil filter element. Replace if necessary.	Chapter 5
	3.	Take oil sample from reservoir (sample kit is free with Corona oils).	Chapter 5
Annual		**(Include above quarterly & semi-annual inspections)**	
	1.	Inspect 2nd stage filter element. Replace if necessary.	Chapter 8
	2.	Grease or lubricate main motor bearings (based on motor vendor's recommendations).	Chapter 8
	3.	Grease the auxiliary oil pump motor bearings.	Chapter 8
	4.	Inspect and grease inlet butterfly valve assembly.	Chapter 8
	5.	Inspect and grease unloading valve assembly.	Chapter 8
	6.	Inspect discharge check valve. Replace if necessary.	Chapter 8
	7.	Inspect the interstage air gaskets. Replace if necessary.	
	8.	Inspect intercooler tubes, flush, and replace water-side gaskets. Clean if necessary.	Chapter 8
	9.	Inspect oil cooler tubes, flush, and replace water-side gaskets. Clean if necessary.	Chapter 8
	10.	Inspect after cooler tubes, flush, and replace water-side gaskets. Clean if necessary.	Chapter 8
	11.	Check surge pressure.	
	12.	Inspect main coupling.	Chapter 8
	13.	Check main coupling alignment.	
	14.	Inspect air exhaust muffler and cover. Replace if necessary.	
	15.	Driver checks and annual maintenance (motor or turbine based on vendor's requirements).	Chapter 8

TABLE 4-1
MAINTENANCE GUIDELINES SCHEDULE

APPROXIMATE FREQUENCY		DESCRIPTION	REFERENCE
Bi-Annual		**(Include above quarterly, semi-annual, and annual inspections)**	
	1.	Replace Corona lubricant.	Chapter 5
	2.	Clean oil reservoir.	Chapter 5
3-Year Annual		**(Include above quarterly, semi-annual, annual, and bi-annual inspections)**	
	1.	Interim airend inspection.	
	2.	Clean impellers, diffusers, and casings.	
	3.	Inspect main oil pump.	
	4.	Inspect auxiliary oil pump.	
	5.	Clean intercooler and aftercooler chambers. Sandblast and recoat, if necessary.	

OIL FILTER

Duplex Filter transfer procedure

1. Pull handle away from the filter, but do not turn to equalize pressure.

2. Partially unscrew vent plug from filter currently not being used.

3. Once oil weeps from vent plug, release handle and tighten vent plug.

4. Switch transfer valve over to filter not being used by pulling handle away from the filter to equalize pressure internally and turn the lever through 90°. The other filter side is now in operation.

5. Release handle.

Duplex Filter Replacement Procedure

1. Make sure handle is pushed in.
2. On dirty filter not in operation, remove drain plug to drain oil.
3. Partially unscrew vent plug to help drain oil.
4. Reinstall drain plug and unscrew dirty housing.
5. Install new element and reinstall housing. Check o-rings and replace parts as necessary.
6. Pull handle away from the filter to fill the empty housing. Caution: Do not rotate the handle.
7. Once oil weeps from vent plug, release handle and tighten vent plug.

OIL COOLER

Removal

1. Disconnect oil and water piping.
2. Remove U-bolts that fasten the oil cooler to the baseplate.
3. Remove cooler from brackets.

Cleaning

The oil cooler can be cleaned by periodically flushing, rodding, or back flushing. If used in the water system, strainers are also to be cleaned.

Installation

1. Re-fasten bolts to the oil cooler.
2. Connect oil and water piping.

INTERCOOLERS

The first and second stage intercoolers and aftercooler are integral with the compressor baseplate. Each intercooler assembly consists of a tube bundle and a moisture elimination section.

During manufacture, the interior of the intercooler housing is sand blasted, then coated with a water resistant phenolic.

Note

If intercooler housing interior surfaces require recoating, contact the nearest FS-Elliott office for cleaning and recoating specifications.

Tube Bundle Removal

1. Disconnect cooling water piping.
2. Remove cap screws from tube bundle coverplate.
3. Use capscrews in jackscrew holes provided to break flange seal.
4. Withdraw tube bundle from intercooler housing.

CAUTION

Do not handle tube bundle with hooks or other devices that might damage tubes or rubber sealing strips. Use cradles or skids when moving or handling tube bundles.

Cleaning

Several methods can be used to clean interior (water side) tube surfaces. Many deposits can be removed by directing a high velocity stream of water through the tubes. In some cases, it may be necessary to mechanically clean the tube bundle with wire brushes, rods or other specially designed tube cleaning tools.

Note

Contact the nearest FS-Elliott office for tube cleaning details.

Exterior (air side) tube surfaces should be cleaned by water washing.

CAUTION

Do not use chemical cleaning compounds or mechanical cleaning methods on the tube bundle exterior surfaces.

Inspection

Inspect tube bundle for tube leaks or fouling. Clean tube bundle as necessary; plug tubes or replace tube bundle if leaking.

Note

It is not practical to replace tubes in tube bundles. Leaks can usually be stopped by plugging the defective tube. Compressor efficiency will be greatly reduced if too many tubes are plugged. For this reason, FS-Elliott recommends replacing the tube bundle when many tube leaks are evident.

Installation

1. Install a new gasket to the tube bundle cover sealing surfaces if the old one is damaged.
2. Lubricate the sealing strips with a water-soluble lubricant.
3. Place tube bundle into intercooler housing. Ensure rubber sealing strips are properly oriented to prevent air leakage during operation.
4. Install cap screws and secure intercooler cover to housing.
5. Connect cooling water piping.

VIBRATION PROBES

Vibration probes are installed in the gear case to monitor pinion vibration. Refer to Chapter 6 - Control System for replacement and adjustment of the vibration probes.

DISCHARGE CHECK VALVE

Routine examination and maintenance are recommended on an approximate yearly basis. The soft, resilient seal ring for check valve discs may be inserted by hand on location when valve is removed from the line. No bonding is required. When a valve is assembled, the seal ring is locked into position. Only one ring is required. To install seal, separate body from seal housing, clean ring groove, insert new ring and reassemble valve.

A replacement kit can be ordered from FS-Elliott Co., LLC.

EXTENDED SHUTDOWN

If a compressor is to be shutdown for a period of time greater than a couple of days, the following steps should be considered to protect the unit against internal corrosion and damage due to moisture. The greatest need is with units installed outdoors or in unheated buildings and having outdoor intake. Units installed indoors with air supplied from inside the building also require protection for extended shutdowns; however, initiation can usually be delayed from a couple of days to several weeks without adverse consequences. Clean and complete any maintenance or repair work on unit prior to preparing for extended shutdown.

Preparation and Maintenance for Extended Shutdown

1. Lock out main power breakers to prevent start-up.

2. Remove section of air piping from the compressor discharge.

   a. Connect a warm-dry-low pressure air source to compressor discharge and circulate warm-dry air through the unit for at least 24 hours.

   b. Record inlet and discharge air temperature and relative humidity hourly. Continue air circulation for 6 hours after leaving air has essentially same moisture content as entering air. Intercoolers are the primary source of moisture; therefore, good preservation practice requires all liquid to be eliminated from unit's internals and moisture content to as low as possible.

Note

Air heated to approximately 150°F (65°C) will greatly speed up moisture removal process.

3. Remove temporary air source and blank off compressor inlet and discharge with steel covers and gaskets.

4. A bag of desiccant (MIL D-3464 or equal) must be attached to the inside of the steel covers. Plug intercooler drains with steel plugs. Remove oil mist eliminator and plug. Remove water piping to intercoolers, oil cooler and aftercooler. Drain water and blow dry. Plug openings with steel plugs.

5. Place a 100-watt light bulb or strip heater in the control panel and energize.

6. The preferred arrangement is to warm the oil and circulate the oil each week using the auxiliary oil pump. During this period, turn the compressor and motor by using a strap wrench to assure oil coverage of compressor gearing and motor bearings.

CAUTION

Excessive running time of auxiliary oil pump may cause oil to migrate across the seals and cause equipment damage. Do not run the auxiliary oil pump for more than five minutes.

7. Recommendations for extended shutdown of the drive motor are provided in Chapter 8 – Accessories. Refer to the storage recommendations in the vendor's manual.

Note

Motors may be provided with space heaters to the keep moisture from condensing on the winding. The space heaters are to be energized during the shutdown period. Reference the space heater nameplate fastened to the motor for wiring details.

Preparation for Re-Start After an Extended Shutdown

1. Reconnect water piping and intercooler drain piping. Remove plugs from the intercooler drains.

2. De-energize space heaters and/or light bulbs. Remove motor tarp. Remove any light bulbs.

3. Remove desiccant and reconnect inlet and discharge lines.

4. Change oil filters and check oil levels of compressor. Stroke the inlet and unloading control valves (open and closed) to assure proper operation.

5. Take an oil sample and check the moisture content. Change oil if necessary.

6. Reconnect air supply to L7 connection.

7. Guidelines on preparation for service of the motor are provided in Chapter 8 -Accessories of this manual. Check and record the motor insulation resistance. If a significant change is measured, it should be investigated and corrective action taken.

8. Reconnect main power disconnect switch to the motor starter.

9. Follow start-up procedures as outlined in Chapter 3 – Operation.

Extended Shutdown Checklist

SHUTDOWN PERIOD FROM _____ TO _____

I. PREPARATION FOR SHUTDOWN

1.		LOCK OUT MAIN MOTOR BREAKER.
2.		BLOW DOWN COMPRESSOR WITH WARM, DRY AIR.
3.		REMOVE AIR PIPING, BLANK OFF AND ATTACH DESICCANT.
4.		REMOVE WATER PIPING TO ALL COOLERS, DRY AND PLUG.
5.		PLUG INTERCOOLER DRAINS.
6.		REMOVE BUFFER SEAL RELIEF VALVE AND CAP.
7.		REMOVE OIL MIST ELIMINATOR AND PLUG PIPE.
8.		PRESSURIZE AND BLEED NITROGEN PURGE.
9.		ENERGIZE THE MAIN MOTOR SPACE HEATERS.
10.		DISCONNECT PNEUMATIC LINES AND PLUG.
11.		SUPPLY LIGHT BULBS OR STRIP HEATERS.
12.		FOLLOW MOTOR RECOMMENDATIONS IN CHAPTER 8 - ACCESSORIES.

II. MAINTENANCE DURING SHUTDOWN

	HEAT & CIRCULATE	*ROTATE COMPRESSOR*	*CHECK N_2 SUPPLY*	*FOLLOW MOTOR RECOM-MENDATIONS*	*PERSONNEL'S INITIALS*	*REMARKS*
WEEK OF						
WEEK OF						
WEEK OF						
WEEK OF						

Extended Shutdown Checklist

	HEAT & CIRCULATE	ROTATE COMPRESSOR	CHECK N_2 SUPPLY	FOLLOW MOTOR RECOM-MENDATIONS	PERSONNEL'S INITIALS	REMARKS
WEEK OF						
WEEK OF						
WEEK OF						
WEEK OF						
WEEK OF						
WEEK OF						
WEEK OF						
WEEK OF						
WEEK OF						
WEEK OF						
WEEK OF						
WEEK OF						
WEEK OF						
WEEK OF						
WEEK OF						
WEEK OF						
WEEK OF						
WEEK OF						
WEEK OF						

INTRODUCTION

This chapter furnishes operating data, oil requirements and pre-start inspection and preparation procedures for the Polaris lubrication system. A functional description of major system components is also furnished.

OIL REQUIREMENTS

For optimum operation and the maximum service life, FS-Elliott recommends the use of Corona Turbo Blue lubricant. This premium lubricant is specifically blended for use in the Polaris compressor and will provide the following benefits:

- Extended lubricant life
- Minimizes build-up of lacquer, varnish or resins
- Excellent wear protection
- Superior resistance to foaming
- Longer equipment operating life
- Reduced down time
- Free oil analysis program

Corona Turbo Blue is a premium blend of synthetic and petroleum base fluids specially designed for centrifugal compressor applications. This lubricant is manufactured using state-of-the-art refining technology and utilizes only the highest quality base feed stocks with premium additives. These meticulously selected additives include superior rust and corrosion inhibitors, oxidation control agents, anti-wear compounds and defoamants and are exceptional at controlling sludge and deposits.

Corona Turbo Blue lubricant is supplied with all new FS-Elliott centrifugal compressors. Any additions, substitution or mixing of lubricant brands is not recommended and could potentially result in mechanical damage and / or poor performance. However, if the user elects to substitute a lubricant, Tables 5-1 and 5-2 contain information to assist in selecting the proper lubricant. **USAGE OF UNSPECIFIED LUBRICANTS IS DONE AT THE OWNER'S RISK.** Corona Turbo Blue meets or exceeds all of the parameters noted in these tables.

Making the proper lubricant selection is the first step to ensuring long-term reliable operation. It is essential to maintain the lubricant in the best possible condition. Contamination by water, dust, chemicals or other impurities must be prevented. Establishing an analysis discipline to determine the frequency of lubricant changes is a key element of any long-term oil management program. FS-Elliott can recommend a procedure for sampling and testing. Sampling kits including mailing boxes are available from your local FS-Elliott distributor.

WARNING

This unit is supplied with Corona Brand Lubricant. Mixing lubricants could dilute the original fluid and cause adverse effects to the operation of the compressor and the lubricated components. FS-Elliott's Corona Brand Lubricant is factory recommended and engineered for use in this compressor. Use of other types of lubricant may result in loss of warranty.

For detailed information and availability of Corona Turbo Blue, contact the nearest FS-Elliott representative. To locate a representative for your region, go to website address: *http://www.fs-elliott.com*.

PRIOR TO INITIAL OPERATION

The lubrication system is cleaned, flushed and tested before the Polaris compressor is shipped. After the factory testing is completed, the oil system is drained and the reservoir is re-filled with new Corona Turbo Blue lubricant and a new oil filter canister is installed.

Review the Lubrication System Flushing section of this chapter for instances where the system is being changed from a mineral base or other type lubricant to Corona Turbo Blue.

LUBRICATION SYSTEM FLUSHING

Maintaining a clean, sludge free supply of a premium lubricant is essential to providing smooth equipment operation and maximum service life.

As noted previously, all new FS-Elliott centrifugal compressors are supplied with Corona Turbo Blue lubricant. **ANY OTHER TYPE OIL ADDITIONS, SUBSTITUTIONS OR MIXING OF LUBRICANTS IS NOT RECOMMENDED.** Contact your local FS-Elliott representative if there are any questions or doubt concerning the type of lubricant presently being utilized. Your local FS-Elliott representative can provide a lubricant sampling kit and follow-up analysis service to determine the condition and type of lubricant contained in the reservoir. In the event that the compressor has been operating for a period of greater than thirty days and is being converted to Corona Turbo Blue lubricant, or if oil analysis indicates that the system has been contaminated, the lubrication system should be flushed to remove lacquer, varnish, resins, and other harmful material that may have entered the oil supply.

Flushing Procedure

This section provides a procedure for the replacement of petroleum (mineral) oil in the FS-Elliott compressor to the Corona Turbo Blue lubricant. This procedure ensures trouble-free operation of the FS-Elliott compressor. The following tools are required: empty oil drums according to oil reservoir capacity, a hand or motorized pump, a dolly or fork truck and "oil dry" or other absorbent material.

Varnish/carbon deposits can form when an over-extended petroleum based (mineral) oil is being utilized. To ensure that these deposits are removed from the system, FS-Elliott engineers have developed a cleansing process for use with the specially formulated fluid .

This flushing procedure was developed exclusively for FS-Elliott's Polaris lubrication system and eliminates the need to disassemble the compressor for cleaning. This procedure is recommended for any compressor that has been operated for more than 30 days and is being converted over to Corona Turbo Blue.

1. A ratio of 1 gallon of Corona Turbo Clean is required for every 10 gallons of mineral oil in the oil reservoir. Refer to Table 5-2 for the capacity of the oil reservoir. Some of the oil must be removed from the reservoir before any Corona Turbo Clean is applied to the system. This can be completed while the unit is in operation provided care is taken not to lower the oil level below the safe minimum operating level.

2. Once the Corona Turbo Clean is placed into the reservoir, continue to operate the compressor for a minimum of 40 hours.

CAUTION

The unit should not exceed 60 hours of operation during the cleansing period.

3. After running the compressor for the required 40 to 60 hours, shutdown the compressor and drain the old lubrication from the system while it is still hot. Draining the oil (while hot) prevents any contaminants from settling out of the system. To ensure that all the oil is removed, the piping must be disconnected at any low points in the lubrication system. Connect a drain line to the oil reservoir drain and pump the old lubricant out of the reservoir and into a container.

4. Once all of the oil is drained from the system, the oil reservoir cover must be removed. Using lint free rags, any remaining oil in the reservoir must be cleaned/removed from the reservoir. Any spilled oil should be cleaned up using "oil dry" or any other oil absorbent.

5. The oil filter(s) must be replaced and the housing cleaned.

6. Once the oil system is drained, all the oil piping connections must be re-connected. The oil reservoir should be filled to the proper level with Corona Turbo Blue. Refer to the Table 5-2.

7. Corona Turbo Blue and Corona Turbo Clean are compatible with mineral oil, in that, no special requirements or procedures are needed for disposal. The standard lubricant disposal practices should be used for disposal of the used lubricant and lubricant filter.

8. Circulate the oil through the system using the auxiliary oil pump for 15 minutes. While operating the auxiliary oil pump, ensure that 4 to 6 psig (.28 to .41 bar) seal air pressure is available. Otherwise, oil migration across the seals could occur. (Refer to Chapter 6 - Controls for instructions on how to place the Auxiliary Oil Pump in circulate/test mode).

9. Inspect the oil piping to ensure that there are no lubrication leaks. Any leaks must be corrected before start-up.

10. Follow the standard start-up procedure for the compressor. Refer to Chapter 3-Operation, for start-up instructions.

LUBRICATION SYSTEM COMPONENTS

Oil Reservoir

The oil reservoir is located in the Polaris baseplate. The reservoir is equipped with a filler opening, a drain connection, a covered access for internal inspection and cleaning, an oil level sight gage and air ejector / oil filter system.

Pumps and Drivers

The lubrication system has two positive displacement rotary pumps. These pumps provide a constant oil flow to the compressor bearings and gears. The main oil pump is driven by the gear shaft. The motor driven auxiliary oil pump operates automatically when starting and stopping the Polaris P300 or when the oil pressure is low. Both pumps supply oil at a flow rate and discharge pressure in excess of that required for normal operation. This excess capacity ensures a pressure controlled oil flow during all operating conditions. A main header relief valve in the pump discharge piping maintains design oil pressure to compressor bearings and gears during normal operation.

The auxiliary oil pump is also provided with an integral relief valve to maintain oil pressure during startup and shutdown. The purpose of the auxiliary oil pump's relief valve is to relieve its oil supply during acceleration as the main oil pump comes up to speed. How to properly set this relief valve will be explained later in this chapter.

Oil Cooler

The oil cooler is a shell and tube type heat exchanger. Cooling water flows through the tubes. Oil flows through the shell and around the tubes. Baffles and fins inside the shell control the oil flow through the cooler.

Oil Mist Eliminator

The oil mist eliminator (OME) is used to vent air from the gear case and oil reservoir. Oil entrapped in the air is separated by a coalescing filter and returned to the reservoir. The element in the oil mist eliminator should be replaced when the ΔP (on the oil mist eliminator gauge) across the element exceeds 10" H_2O above the clean saturated pressure drop. The maximum ΔP to change the element is not to exceed 15" H_2O.

Example: ΔP Clean and Saturated Across New Element + 10" H_2O = ΔP to change Element

Oil Filter

A canister type oil filter is used in the Polaris lubrication system. The filter has vents for air removal and a gage is installed on the inlet port to monitor the pressure drop across the filter. New filter canisters must be installed when the pressure differential reaches 10 psid (0.7 bar) above the clean pressure drop reading across the element. Refer to the Control Panel Configuration Sheets located in the Equipment Data section of this manual to determine the differential pressure set point. Once the pressure differential reaches this setpoint, a new filter element should be installed.

Example: ΔP Clean Across New Element + 10 psid = ΔP to Change Element

-OR-

ΔP Clean Across New Element and Filter Housing + 10 psid = ΔP to Change Element

Thermostatic Mixing Valve

A thermostatic mixing valve is furnished to regulate the oil temperature to the compressor. When the oil temperature to the compressor is below 110°F (43°C), the mixing valve causes the oil to bypass the oil cooler. When the oil temperature exceeds 120°F (49°C), the mixing valve routes all the oil through the cooler. At oil temperatures between 110°F and 120°F (43°C and 49°C), the mixing valve regulates the oil flow between the oil cooler and the bypass to maintain this temperature range.

Oil Reservoir Heater

An oil heater and low oil level switch are optional. The heater is installed in the side of the oil reservoir. The integral thermostat can be adjusted to obtain the desired oil temperature. The low oil level switch will de-energize the oil heater in the event of a low oil level condition. The reset button on the low oil level switch must be pushed to re-energize the oil heater once the low oil level condition is corrected.

WARNING

Disconnect power to the oil heater before draining the oil reservoir. Failure to do so may result in serious or fatal personal injury and/or damage to compressor components.

Relief Valve (Auxiliary Oil Pump)

The purpose of auxiliary oil pump's relief valve is to relieve its oil supply during acceleration as the main oil pump comes up to speed. During initial startup, the oil pressure is to be adjusted while the unit is not running and the auxiliary oil pump is turned on. The oil pressure is to be adjusted while at the minimum oil permissive start temperature of 74°F (23°C) or hotter per the following table. The oil pressure can be adjusted by removing the cap on the relief valve and turning the adjusting screw clockwise (CW) to raise the pressure and counterclockwise (CCW) to lower the pressure. After the pressure is set, tighten the locknut to keep the adjusting screw in position.

Inlet Oil Temperature (IOT)	Inlet Oil Pressure (OPT)
74 – 82°F (23 – 27°C)	22 PSIG (1.52 BARG)
83 – 91°F (28 – 32°C)	21 PSIG (1.48 BARG)
92 – 100°F (33 – 37°C)	20 PSIG (1.41 BARG)
101 – 109°F (38 – 42°C)	19 PSIG (1.34 BARG)
110 – 120°F (43 – 49°C)	18 PSIG (1.27 BARG)

Relief Valve (Main Header)
The main oil system relief valve is used to maintain 20-25 psig (1.41-1.72 BARG) of oil pressure in the header. The oil pressure can be adjusted while the unit is running by removing the cap on the relief valve and turning the adjusting screw clockwise (CW) to raise the pressure and counterclockwise (CCW) to lower the pressure. After the pressure is set, tighten the locknut to keep the adjusting screw in position.

Piping
The lubrication system components are joined together by the necessary piping to make the system functional. This includes provisions for installing monitoring, control and safety devices.

Safety, Control and Monitoring Devices
The lubrication system is equipped with an oil pressure transmitter and an oil temperature sensor on the oil feed line to the compressor. These devices are located on the unit and are wired back to the control panel. The oil pressure transmitter trips the compressor if a low oil pressure condition should occur. The oil temperature sensor alarms and trips the compressor if a hot oil condition should occur.

During normal compressor operation, the main oil pump supplies oil to fulfill the unit's oil requirements (bearings and gears). The auxiliary oil pump remains on standby in case the performance of the main oil pump deteriorates. The relief valve should be adjusted to maintain a system oil pressure of about 25 psig (1.72 bar). A sufficient system oil pressure of 20 psig (l.38 bar) minimum must exist at all times during compressor operation. Should the system oil pressure decrease to 13 psig (0.9 bar), the unit will automatically shutdown.

TABLE 5-1
GUIDELINES FOR SELECTING LUBRICATING OILS
(Mineral, Synthetic, or Blended Synthetic)

RECOMMENDED VISCOSITY (SUS @ 100°F)	145 - 165
RECOMMENDED VISCOSITY (SUS @ 210°F)	43 - 46
RECOMMENDED VISCOSITY (cSt @ 40°C)	27.8 – 32.0
RECOMMENDED VISCOSITY (cSt @ 100°C)	5.0 – 6.0
VISCOSITY INDEX	Above 90
MINIMUM FLASH POINT	350°F / 175°C

Note
Figures given in this table indicate general service requirements for FS Elliott compressors. Specific lubricating oil recommendations are the responsibility of the oil supplier.

When the unit shuts down, (manually or due to a safety trip device), the auxiliary oil pump automatically starts. The auxiliary oil pump continues to operate and cool the compressor bearings. After 15 minutes, the auxiliary oil pump automatically shuts off.

CAUTION

A low pressure trip is an indication that the compressor is not receiving adequate lubrication. In such a case, an operator must investigate and correct the root cause of the problem. Contact your local FS-Elliott Service office, if necessary. Otherwise, severe mechanical damage to the compressor may occur.

WARNING

Disconnect power to the oil heater before filling the oil reservoir with oil. Failure to do so may result in serious or fatal personal injury and/or damage to compressor components.

Differential Oil Pressure Alarm (Optional)

This feature provides an alarm if the differential pressure across the oil filter/system exceeds the setpoint of 18 psid (12.4 bar). This feature is optional and may not apply to your unit. A pressure switch (or optional transmitter) senses the differential oil pressure and sends a signal to the control panel.

PREPARING FOR INITIAL OPERATION

The lubrication system is cleaned, flushed and tested before the compressor is shipped. The oil system is drained and a new oil filter cartridge is installed. However, the system must be inspected for contamination or damage that may have occurred during shipment or storage before the compressor is placed in service.

1. Check to make sure the oil level is at the normal operating range on the oil level sight gage. Normal fill level is the middle of the sight glass.

2. Start the auxiliary oil pump. Refer to Manual Operation of Auxiliary Oil Pump as outlined in Chapter 6. Circulate oil for approximately 15 minutes.

CAUTION

If the auxiliary oil pump starts but oil pressure is not obtained, the pump is probably rotating in the wrong direction. Immediately shut down the pump and change the wire leads on the pump.

3. The auxiliary oil pump relief valve is to be adjusted while at the minimum oil permissive start temperature of 74°F (23°C) or hotter to the pressure indicated in the following table. The oil pressure can be adjusted by removing the cap on the pump relief valve and turning the adjusting screw clockwise (CW) to raise the pressure and counterclockwise (CCW) to lower the pressure. After the pressure is set, tighten the locknut to keep the adjusting screw in position.

Inlet Oil Temperature (IOT)	Inlet Oil Pressure (OPT)
74 – 82°F (23 – 27°C)	22 PSIG (1.52 BARG)
83 – 91°F (28 – 32°C)	21 PSIG (1.48 BARG)
92 – 100°F (33 – 37°C)	20 PSIG (1.41 BARG)
101 – 109°F (38 – 42°C)	19 PSIG (1.34 BARG)
110 – 120°F (43 – 49°C)	18 PSIG (1.27 BARG)

CAUTION

Setting the auxiliary oil pump pressure higher than the stated values will cause starting problems in flooding the gearcase will oil, resulting in the unit to trip on high vibration and/or motor amps.

4. Check operation of all gages and thermometers, and inspect oil piping for leaks.

TABLE 5-2 LUBRICATION SYSTEM CONTROL PANEL OPERATING DATA		
	ISO Grade 32	
Minimum Oil Temperature	70°F	21°C
Permissive Oil Temperature	74°F	23°C
System Oil Pressure (Measured at Header Gauge)	20 psig to 25 psig	1.4 bar gage to 1.7 bar gage
Maximum Pressure Drop Across Oil Filter	10 psid	0.7 bar differential
(When the pressure differential reaches a reading greater than 10 psid (0.7 bar) above the clean pressure drop reading, the oil filter canister element should be changed. The figure listed on the Control Panel Configuration Sheet indicates the total oil filter pressure drop for the alarm indication).		
Low Oil Pressure Trip	13 psig Decreasing	0.9 bar gage Decreasing
Low Oil Pressure Permissive	16 psig Increasing	1.12 bar gage Increasing
Auxiliary Oil Pump Start Pressure	16 psig Decreasing	1.12 bar gage Decreasing
Auxiliary Oil Pump Stop Pressure	18 psig Increasing	1.26 bar gage Increasing
Oil Temperature From Oil Cooler	115°F to 125°F	46°C to 52°C
High Temperature Alarm Oil From Cooler	135°F Increasing	57°C Increasing
High Temperature Trip Oil From Cooler	140°F Increasing	60°C Increasing
Reservoir Capacity	46 Gallons	175 Liters

Note

Make all pressure-setting adjusents with oil at normal operating temperature.

NOTES

INTRODUCTION

This section describes the operation of the R1000 control system. The functions of the control components, compressor setpoints and compressor protective devices are also described in this section. Figure 6-1 shows a general block diagram of the R1000 and its interaction with the compressor package and customer equipment.

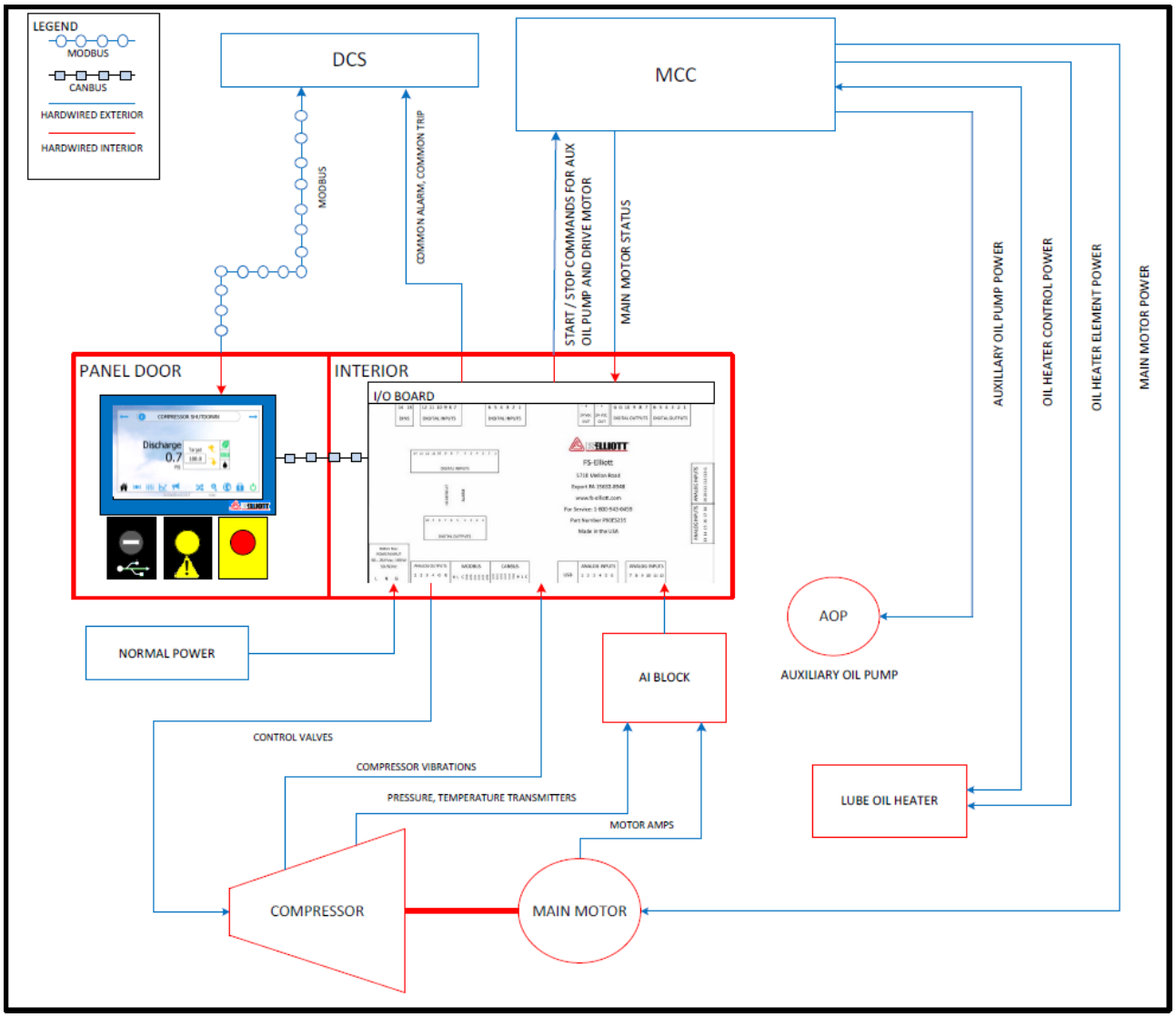

FIGURE 6-1
GENERAL CONTROL BLOCK DIAGRAM

PRINCIPLE OF OPERATION

The R1000 control system:

- Regulates the inlet and unloading valves.
- Monitors the compressor operating conditions.
- Provides alarm and trip safe guard indications.
- Sequences the start-up and shutdown of the unit.
- Governs several modes of operation.
- Stores historical data.
- Provide easy data access via USB interface.
- Communicates with remote devices via Modbus.

The control panel utilizes an IO module and a microprocessor integrated with a 9-inch touch screen display (operator interface) to achieve the functions described above.

Primary communication with the R1000 is through the integral operator interface on the front of the control panel. Commands for starting the compressor, selecting control modes, entering setpoints, acknowledging alarms, etc. are entered via the operator interface. The display informs the operator of the unit's operating status, setpoints, data, control modes, and alarm and trip conditions.

The inlet control valve/guide vanes are positioned to maintain desired motor amperage. The unloading control valve is responsible for maintaining the desired discharge pressure. The unloading valve opens to exhaust compressed air to atmosphere when the compressor output flow exceeds the system demand. The valves (or guide vanes) may be positioned manually or automatically through the R1000 operator interface.

POWERING UP THE CONTROL PANEL

On power up of the control panel, the microprocessor and operator interface go through a boot-up process. During the boot-up process the inlet valve/guide vanes will remain 0% open, while the unloading valve will remain 100% open. The boot-up process lasts approximately 30 seconds and upon completion of the process, the R-1000 home screen will be displayed as shown in Figure 6-2.

NOTE

Due to the fail-safe circuity of the Auxiliary Oil Pump, it will run briefly during the boot-up process.

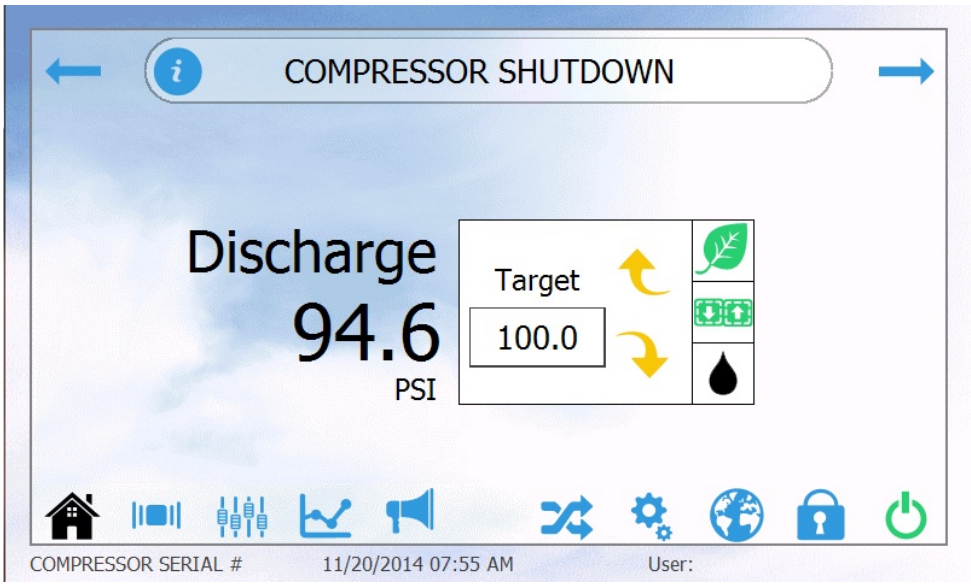

FIGURE 6-2
STATUS/HOME SCREEN

OPERATOR INTERFACE

The front of the control panel contains a touch panel display known as the operator interface. The display is a Liquid Crystal Touch Screen. The operator can communicate with the R1000 program through this device.

The operator interface is interacted with via the icons located on the bottom of the screen. These icons provide various avenues of information retrieval. Push the desired icon to access the corresponding screen. A description of each icon is given on the following pages.

SCREEN ICON KEY

	Home		Manual Unload
	I/O Signals		Oil System
	Settings		Information
	History Trend		Left Scroll
	Alarms/Trips		Right Scroll
	I.C.C.		Analog Signals
	Configuration		Digital Signals
	Language & Units		Tuning
	Security		Close
	Start		Increase
	Stop		Decrease
	Energy Modes		USB

Home

When this icon is selected, the operator interface will display the Home Screen as shown in Figure 6-3. The Home Screen is the default screen for the control system. This screen will appear upon initial boot-up and displays the current discharge pressure and discharge pressure target. A description of the icons shown in Figure 6-3 can be found below:

- The up arrow icon and the down arrow icon are used to adjust the target discharge pressure.
- The energy modes icon is used to access the Energy Mode Selection Screen where various modes of operation can be selected.
- The unload icon is to manually unload the compressor.
- The oil system icon is used to access the Oil System Settings Screen where the Auxiliary Oil Pump (AOP) mode of operation can be selected.
- By using the left or right icons an alternate display of the Home Screen is provided, displaying the driver amps and valve position. The operating status of the compressor (as described in Chapter 3) can also be found at the top of this screen.

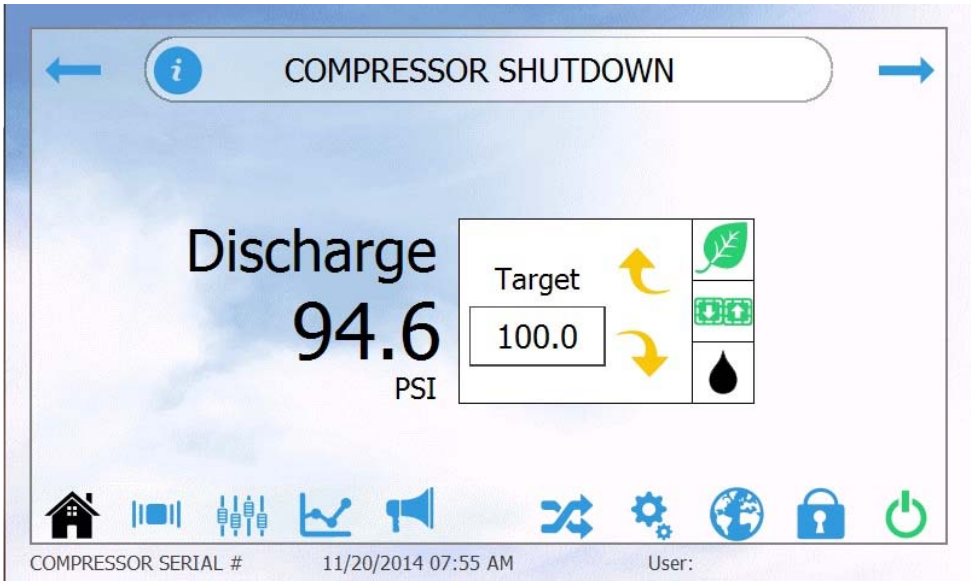

FIGURE 6-3
STATUS SCREEN - DISCHARGE PRESSURE CONTROL

I/O Signals

When this icon is selected, the operator interface will display the I/O Signals Screen as shown in Figure 6-4. This screen will detail the current values of all enabled I/O signals. A description of the icons shown in Figure 6-4 can be found below:

- By using the digital signals icon the operator can view the status of all the digital I/O.
- By using the analog signals icon the operator can view the status of all the analog inputs.
- Eight I/O signals are displayed per screen. By using the left or right icons the operator can scroll between all enabled I/O points.

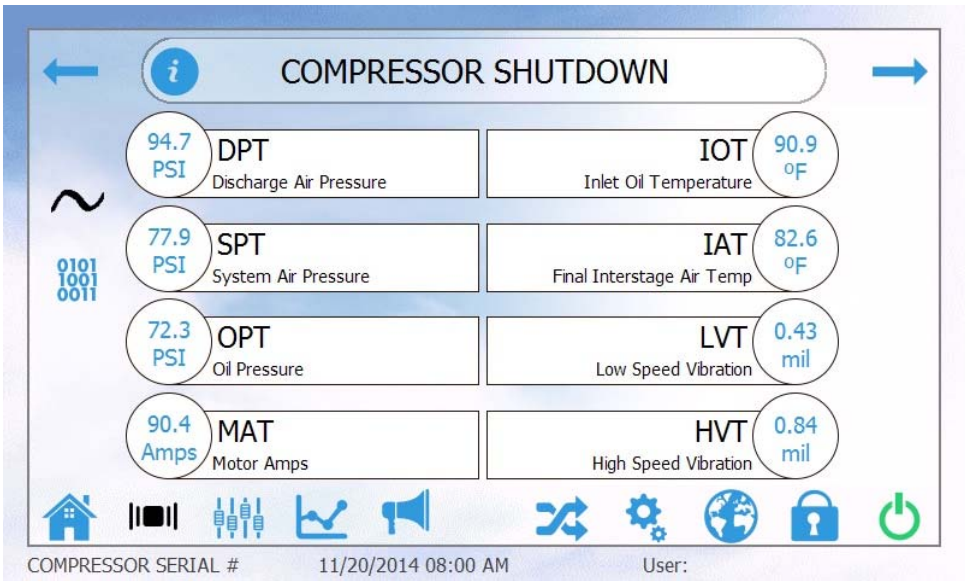

FIGURE 6-4
I/O SIGNAL SCREEN - ANALOG SIGNALS

Settings

When this icon is selected, the operator interface will display the Settings Screen as shown in Figure 6-5. This screen will allow the operator to access several key operational settings (General Settings, Surge Line Calculations, etc.). A description of the icons shown in Figure 6-5 can be found below:

- By using the left ← or right → icons the operator can scroll through the various Setting(s) Screens.

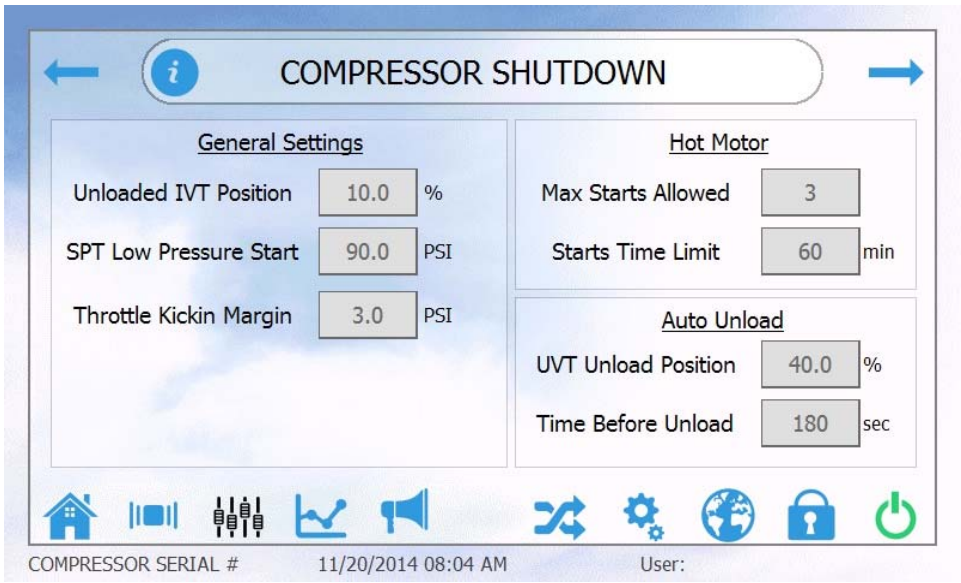

FIGURE 6-5
SETTINGS

History Trend

When this icon is selected, the operator interface will display the History Trend Screen as shown in Figure 6-6. This screen will allow the operator to capture a snapshot of several critical operating parameters.

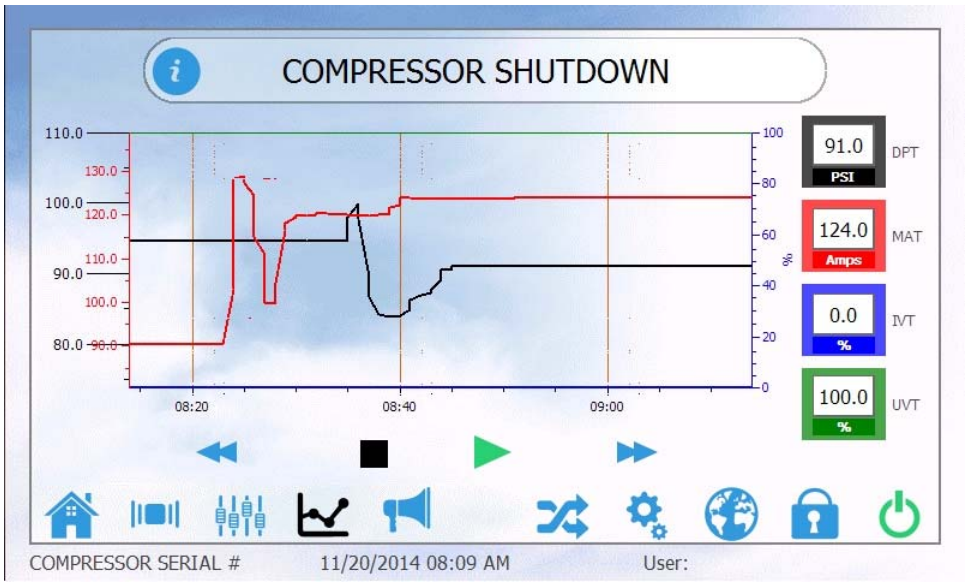

FIGURE 6-6
HISTORY TREND SCREEN

Alarms/Trips

When this icon is selected, the operator interface will display the Alarms/Trips Screen as shown in Figure 6-7. This screen will allow the operator to view all current and historical alarms and trips. A description of the icons shown in Figure 6-7 can be found below:

- By using the folder icon the operator can view all historical alarms and trips (Arrow down to scroll).
- By using the current alarm/trip icon the operator can view all active alarms and trips. (Arrow down to scroll if necessary).

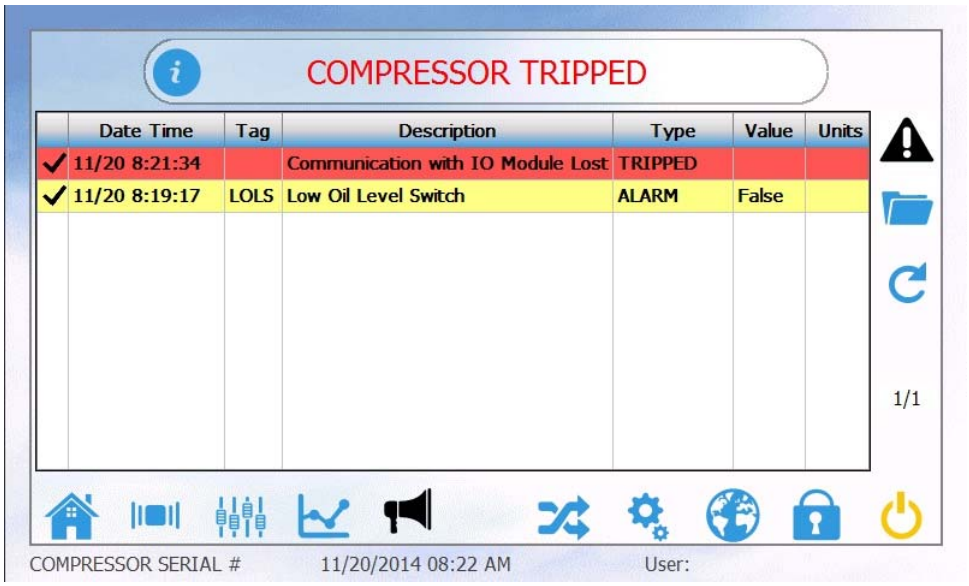

FIGURE 6-7
ALARMS/TRIPS SCREEN

NOTE

Acknowledging and Resetting alarms and trips are detailed in Chapter 3 of this manual.

Integrated Compressor Control

When this icon is selected, the operator interface will display the **Integrated Compressor Control** (ICC) Home Screen as shown in Figure 6-8. This screen is the portal to the Integrated Compressor Control system. Integrated Compressor Control is detailed later in this chapter. A description of the icons shown in Figure 6-8 can be found below:

- By selecting the slave settings icon the operator can view all ICC Slave Control Settings. The operator can exit the Slave Settings Screen by selecting the arrow return icon.
- By selecting the master settings icon the operator can view all ICC Pressure Control Settings. The operator can exit the master settings screen by selecting the arrow return icon.
- By selecting the group selection icon the operator can view the current ICC system configuration and order. The operator can exit the Group Selection Screen by selecting the arrow return icon.
- By selecting the network configuration icon the operator can view all units available for sequencing. The operator can exit the Network Configuration Screen by selecting the arrow return icon.
- By pressing the ICC start icon the operator can enable Integrated Control Compressor (This feature is further explained later on in this Chapter).

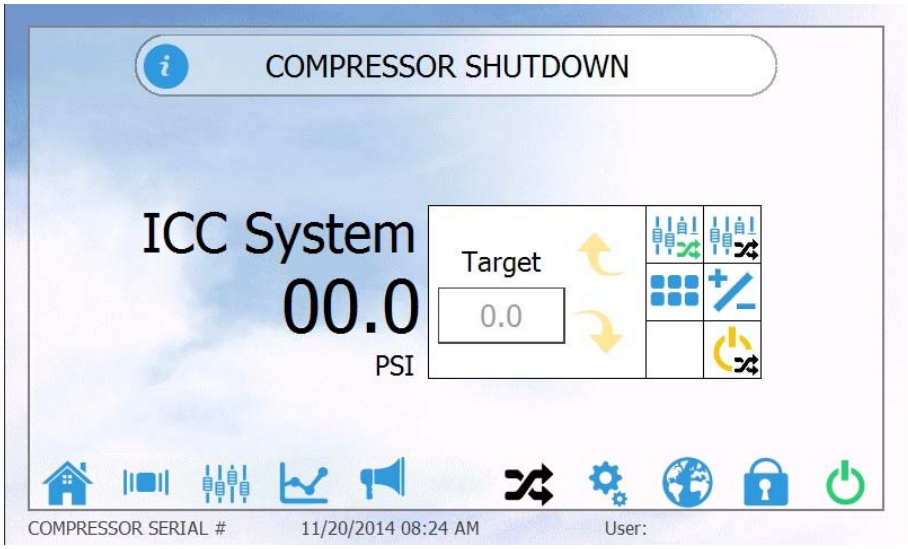

FIGURE 6-8
INTEGRATED COMPRESSOR CONTROL - HOME SCREEN

NOTE
For operation and setup of ICC reference the Methods of Control section later in this chapter.

Configuration

When this icon is selected, the operator interface will display the Valve Mode and Tuning Screen as shown in Figure 6-9. This screen will allow manual or automatic selection of the control valves, as well as tuning parameters. A description of the icons shown in Figure 6-9 can be found below:

- By using the left or right icons the operator can scroll through various Timer Setting(s) Screens. The timer default settings are by factory design. Please contact your local authorized FS-Elliott representative for assistance if necessary.
- By using the tuning icon the operator can adjust the tuning parameters for the control valves.
- The operator can select the control valve mode of operation to either automatic or manual.

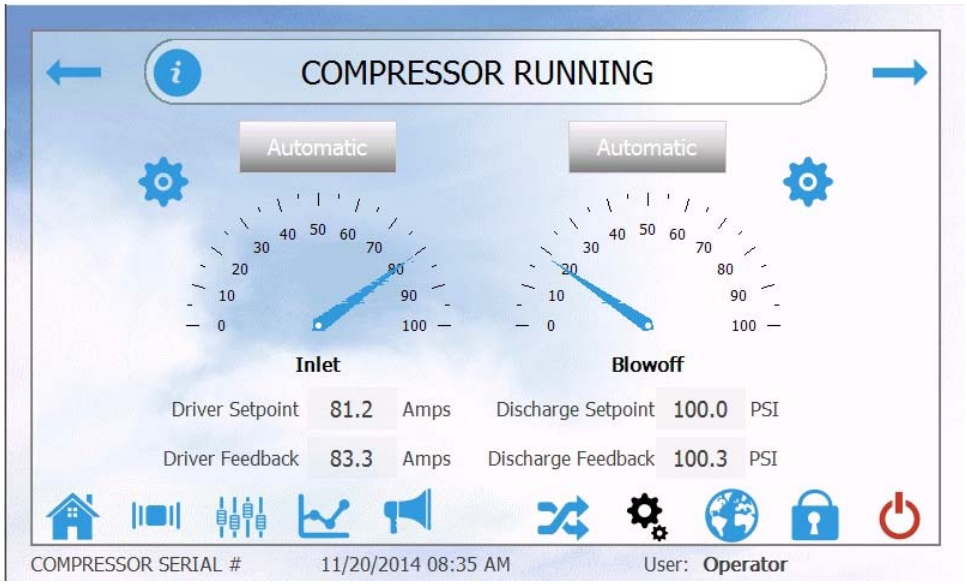

FIGURE 6-9
CONFIGURATION - HOME SCREEN

Language and Units

When this icon is selected, the operator interface will display the Language and Units Selection Screen as shown in Figure 6-10.

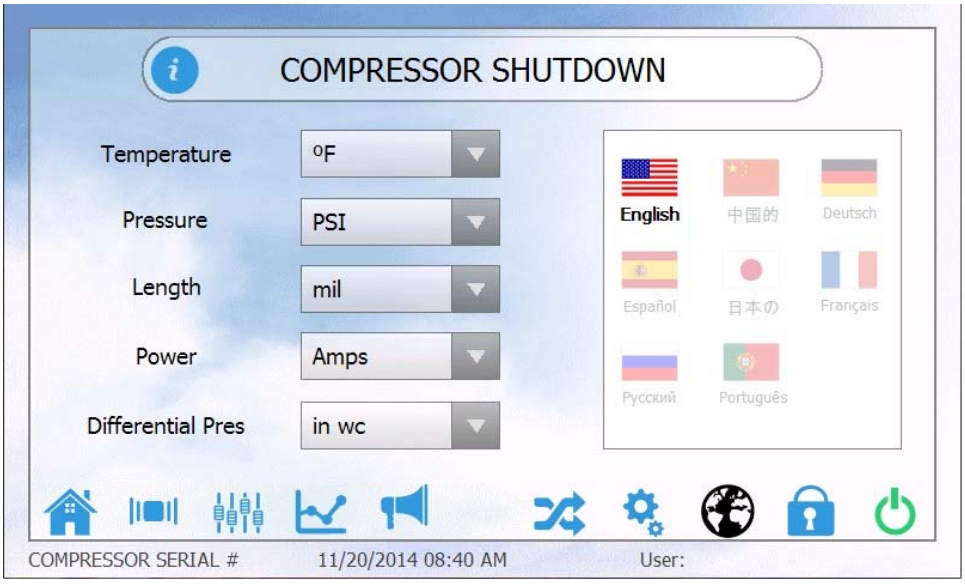

FIGURE 6-10
LANGUAGE AND UNITS SELECTION SCREEN

Security Screen

By selecting this icon, the user can login as an operator allowing access to adjustable parameters as shown in Figure 6-11.

- The operator level password is 9876.
- Once the operator logs in, they will remain logged in until logged out.
- If not logged in, selecting operator level parameters will automatically prompt the Security Screen for login.

FIGURE 6-11
SECURITY SCREEN

Start/Stop

By selecting this icon, the operator will start and stop the compressor.

Information

By selecting the Information icon, the operator can access various information (Trip Count, Surge Count, Run Time, etc.) as shown in Figure 6-12. A description of the icons shown in Figure 6-12 can be found below:

- By using the left ← or right → icons, the operator can scroll through various information screens. These screens include the Communication Settings, History Log Download, Setpoint Save/Restore, Date and Time, Software Upgrade and Lamp Test.

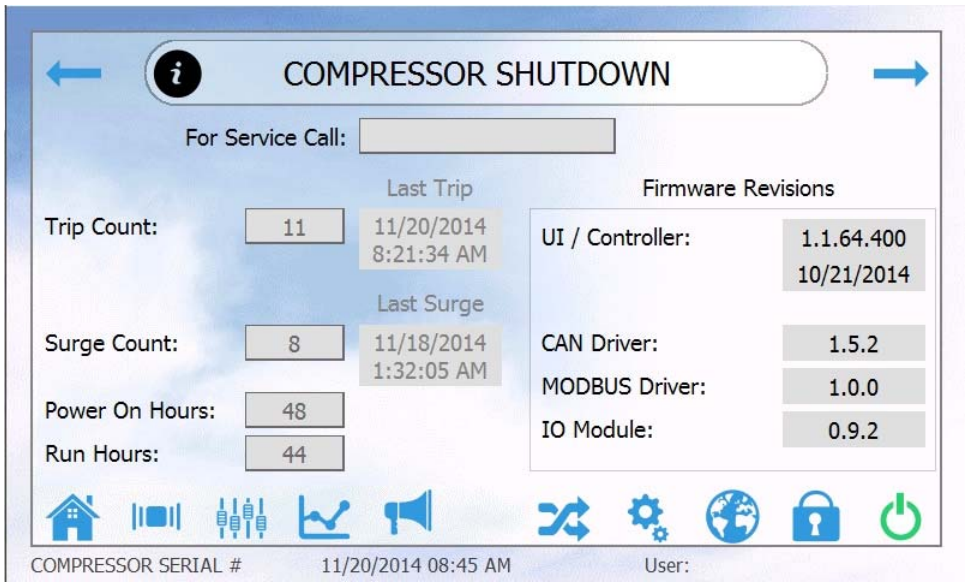

FIGURE 6-12
INFORMATION SCREEN

OPERATIONAL MODE SELECTION

The R1000 Control System provides various modes of control. These modes of control allow the user to meet the system requirements while optimizing energy efficiency. The Energy Mode Configuration Screen can be accessed by selecting the energy icon as shown in Figure 6-13.

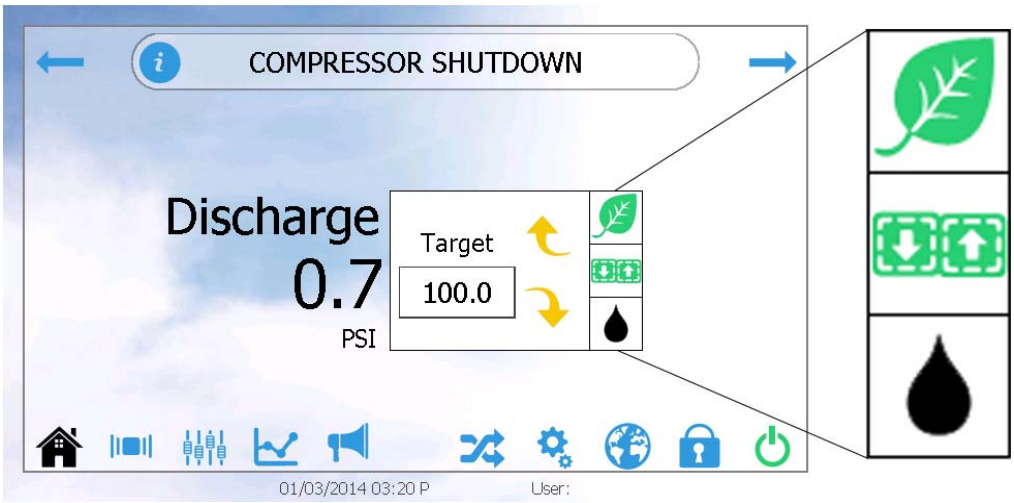

FIGURE 6-13
ENERGY MODE SELECTION

Once the energy icon is selected, the screen shown in Figure 6-14 will be displayed. From this screen, the operator can configure the operation mode of the compressor. As shown in Figure 6-14 below, there are three columns for control configuration. These columns include energy modes, pressure control and start/stop configuration.

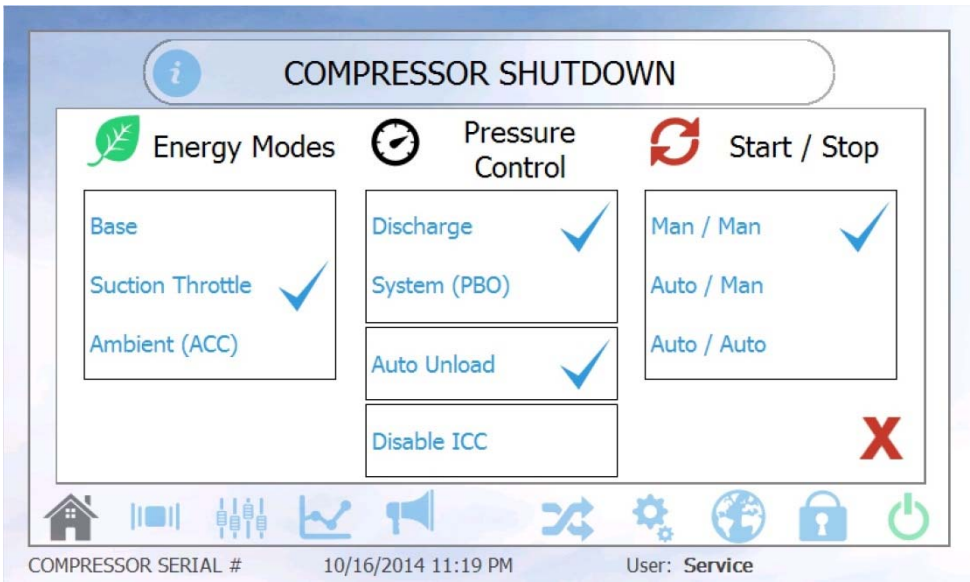

FIGURE 6-14
CONTROL MODE SCREEN

NOTE

It is recommended that the following modes be reviewed before each start-up to ensure the desired compressor operation will be obtained.

Energy Mode Selection

The energy modes selection determines the operational efficiency of the compressor. The R1000 control system incorporates three energy modes. These modes include Base (maximum amp/design flow), Suction Throttle (throttled amp/throttled flow) and Ambient (additional temperature compensation while throttled). The operator can select the desired energy mode by checking it within the column as shown in Figure 6-15.

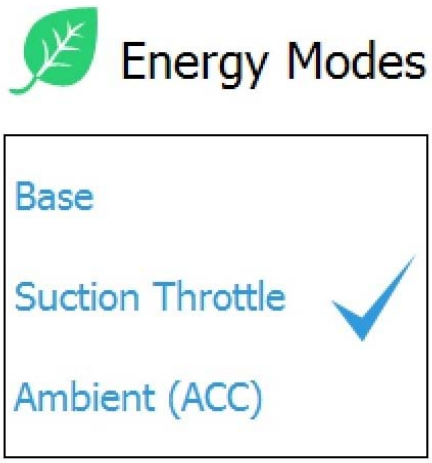

FIGURE 6-15
CONTROL MODE SELECTION

Pressure Control Selection

The pressure control selection determines what pressure the compressor controls to (Discharge or System-Pressure Band Optimization - PBO). The operator can select a mode by checking the desired pressure control mode as shown in Figure 6-16. Also found in the pressure control columns are the options to select Auto Unload and Disable ICC.

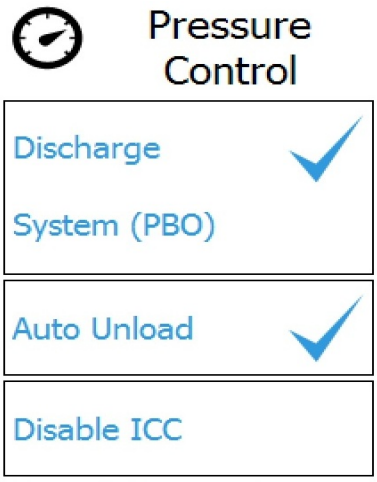

FIGURE 6-16
PRESSURE CONTROL SELECTION

Start and Stop Modes

The R1000 control system incorporates three start and stop modes. The operator can select the desired mode by checking the desired start/stop configuration at shown in Figure 6-17.

FIGURE 6-17
START/STOP MODE SELECTION

METHODS OF CONTROL

Base Mode Control

While operating in base mode control the inlet valve continually modulates to maintain maximum design motor amperage which is directly proportional to design flow. The unloading valve continually modulates to maintain design discharge pressure.

The setpoints required for base mode operation are listed below:

1. Discharge Pressure Target
2. Maximum Motor Current

To operate the compressor in base mode, access the Energy Modes Selection Screen and configure the screen as shown in Figure 6-18.

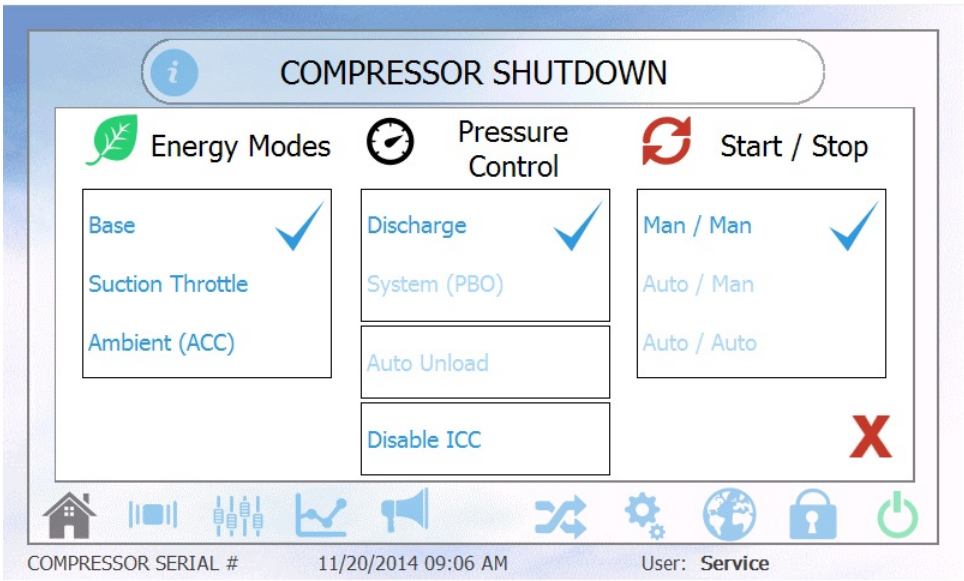

FIGURE 6-18
MODE SELECTION SCREEN - BASE MODE

Suction Throttle Mode Control

The suction throttle control mode is a method of reducing the driver power consumption by throttling the inlet airflow when the plant air system demand is satisfied. This method of control is similar to base mode with the exception that when the plant air pressure (compressor discharge pressure) is satisfied, the inlet control valve/guide vanes throttle the inlet airflow. The inlet valve/guide vanes throttle the airflow until a minimum amperage setpoint is reached. The unloading control valve will modulate to maintain design discharge pressure.

The setpoints required for suction throttle mode operation are listed below:

1. Discharge Pressure Target
2. Maximum Motor Current Target
3. Calculated Minimum Motor Current Target

Configuration requirements (Contact your local authorized FS-Elliott service representative for assistance):

Design surge amps must be determined via a suction surge test.

To operate the compressor in suction throttle mode, access the Energy Modes Selection Screen and configure the screen as shown in Figure 6-19.

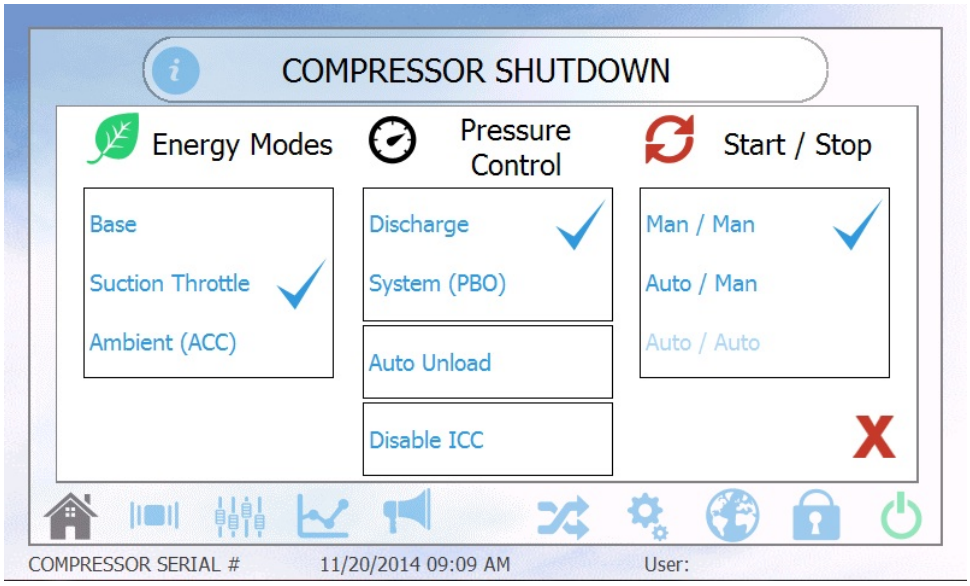

FIGURE 6-19
MODE SELECTION SCREEN - SUCTION THROTTLE MODE

NOTE
Suction surge testing must be performed to determine the design surge amps.

Ambient Compensation Control (ACC)

Ambient compensation control mode operates the same as suction throttle control. The added benefit of ACC is that the minimum amp setpoint, which limits the inlet valves throttle capacity, is dynamic and changes with respect to the ambient temperature. This is particularly beneficial during colder months of the year, as the colder air allows for increased turndown.

The setpoints required for ambient compensation control mode operation are listed below:

1. Discharge Pressure Target.
2. Maximum Motor Current Target.
3. Calculated Minimum Motor Current Target.
4. Surge Test Ambient Temperature.

Configuration requirements (Contact your local authorized FS-Elliott service representative for assistance):

Design surge amps must be determined via a suction surge test.

To operate the compressor in ambient compensation mode, access the Energy Modes Selection Screen and configure the screen as shown in Figure 6-20.

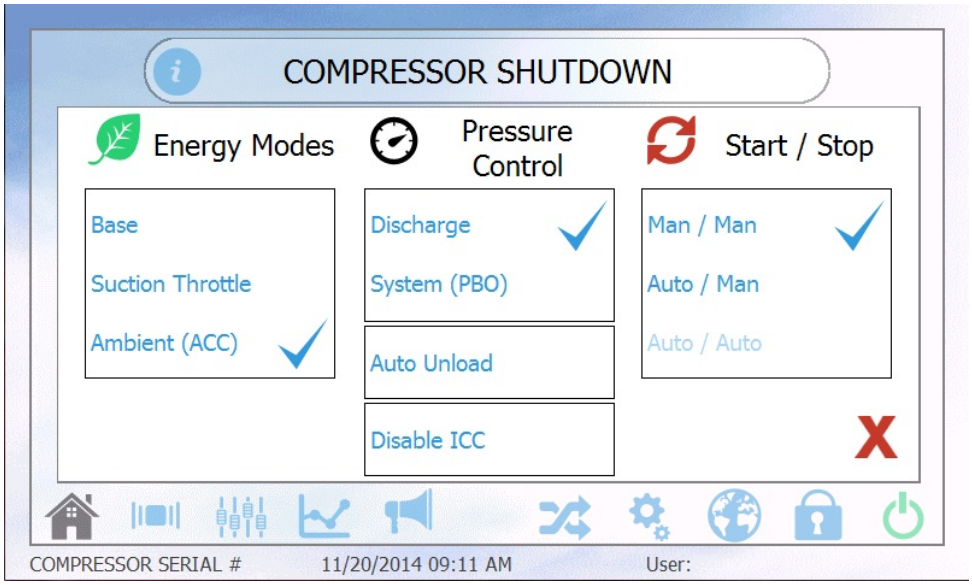

FIGURE 6-20
MODE SELECTION - AMBIENT COMPENSATION CONTROL

NOTE
Suction surge testing must be performed to determine the design surge amps.

System - Pressure Band Optimization (PBO)

NOTE
A system pressure transmitter (SPT) is required to utilize PBO.

Pressure Band Optimization controls to a system pressure target rather than a discharge pressure target. When the compressor is placed into PBO the compressor will begin to vary the discharge pressure to achieve more or less flow to the system. PBO can be utilized with either the suction throttle or ambient compensation energy modes. Therefore throttling of the inlet valve is applicable to PBO.

The setpoints required for PBO are listed below:

1. System Pressure Target.
2. Above and Below Design Discharge Pressures.
3. Above Design, Design and Below Design Surge Amps.

Configuration requirements (Contact your local authorized FS-Elliott service representative for assistance):

1. Determine compressor maximum pressure via discharge surge test.
2. Define above and below design discharge pressures.
3. Perform suction surge tests for above, design and below design surge amps.

To operate the compressor in PBO mode, access the Energy Modes Selection Screen and configure the screen as shown in Figure 6-21.

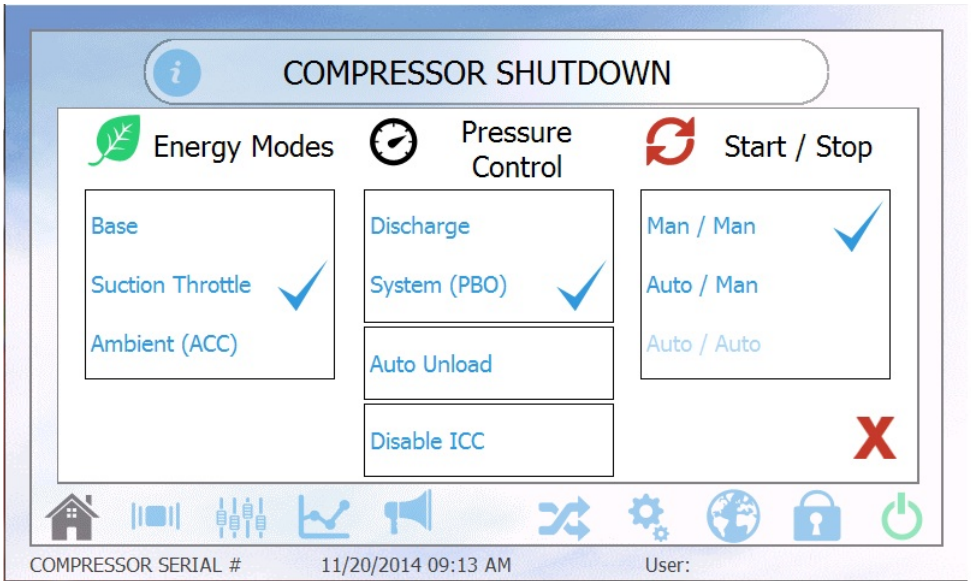

FIGURE 6-21
MODE SELECTION - PRESSURE BAND OPTIMIZATION

Auto Unload

NOTE

A system pressure transmitter (SPT) is required to utilize Auto Unload.

All of the control methods described above can utilize the auto unload feature. When this feature is selected, the control system will automatically unload the compressor to prevent excessive blow off due to a satisfied customer system. With the auto unload feature selected, the control system will monitor the position of the unloading valve and the system pressure. If both the unloading valve and system pressure are above the setpoints (as described below), an auto unload timer is started. Once the auto unload timer expires the compressor will automatically unload by fully opening its unloading valve and closing its inlet valve to a fixed point.

To utilize the Auto Unload feature, access the Energy Modes Selection Screen and configure the screen as shown in Figure 6-22.

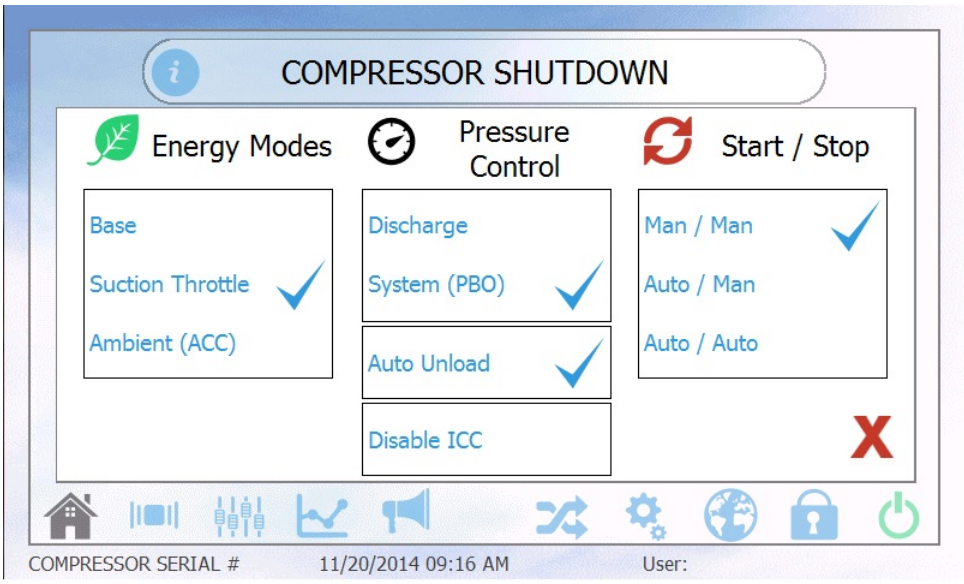

FIGURE 6-22
MODE SELECTION SCREEN - AUTO UNLOAD

Start/Stop Mode - Manual/Manual

All of the control methods described above can utilize the manual/manual - start/stop mode. When this feature is selected, the control system will require an operator to physically push the start/stop icons on the operator interface to start and stop the air compressor.

To utilize the Manual/Manual feature, access the Energy Modes Selection Screen and configure the screen as shown in Figure 6-23.

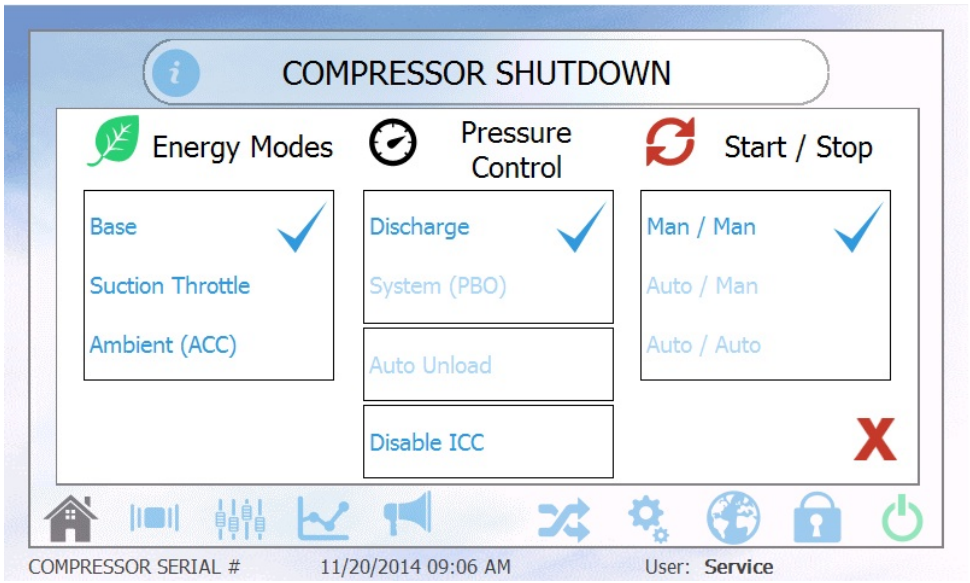

FIGURE 6-23
MODE SELECTION SCREEN - MANUAL/MANUAL

Start/Stop Mode - Auto/Manual

NOTE

A system pressure transmitter (SPT) is required to utilize Auto/Manual.

All of the control methods described above can utilize the auto/manual - start/stop mode. When this feature is selected, the operator will only be required to initiate compressor start sequence. The control panel will then automatically start the compressor when the system air pressure decreases below the SPT Low Pressure Start setpoint. An operator is still required to manually stop the compressor when utilizing this start/stop mode of operation.

To utilize the Auto/Manual feature, access the Energy Modes Selection Screen and configure the screen as shown in Figure 6-24.

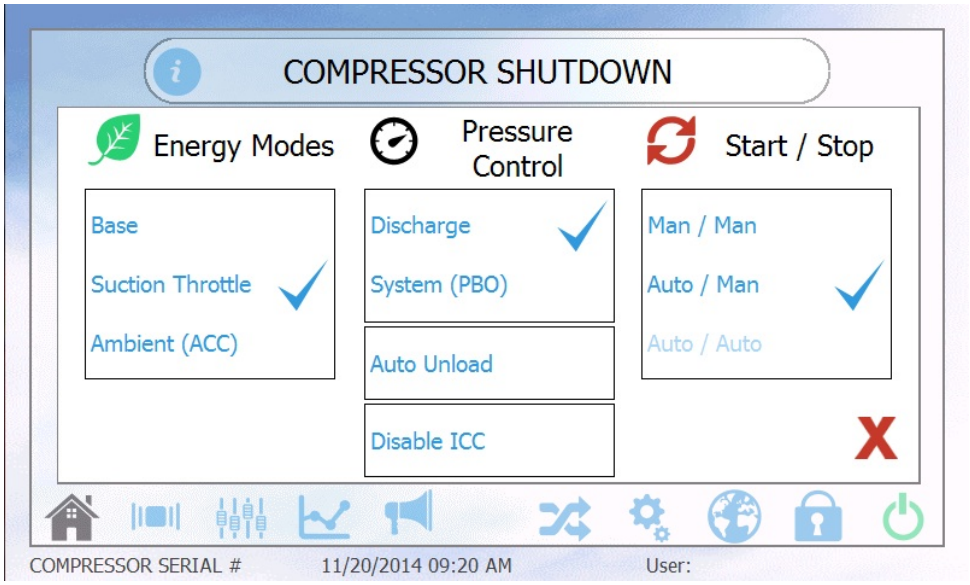

FIGURE 6-24
MODE SELECTION SCREEN - AUTO/MANUAL

Start/Stop Mode - Auto/Auto

NOTE

A system pressure transmitter (SPT) is required to utilize Auto/Auto.

The Auto/Auto feature can be used in various control methods, as long as the Auto Unload feature is enabled. When this feature is selected the operator will only be require to initiate compressor start sequence. The control panel will then automatically start the compressor when the system air pressure decreases below the SPT Low System Pressure setpoint. When the system air pressure exceeds the system pressure setpoint, the control panel will begin the Auto Unload process. Once the compressor is automatically unloaded, an Auto Stop timer is started. Upon expiration of the timer the control panel will automatically shut the compressor down if the system pressure setpoint is still satisfied. Once shutdown, the control panel will monitor the system air pressure and automatically restart when necessary.

To utilize the auto/auto feature, access the Energy Modes Selection Screen and configure the screen as shown in Figure 6-25.

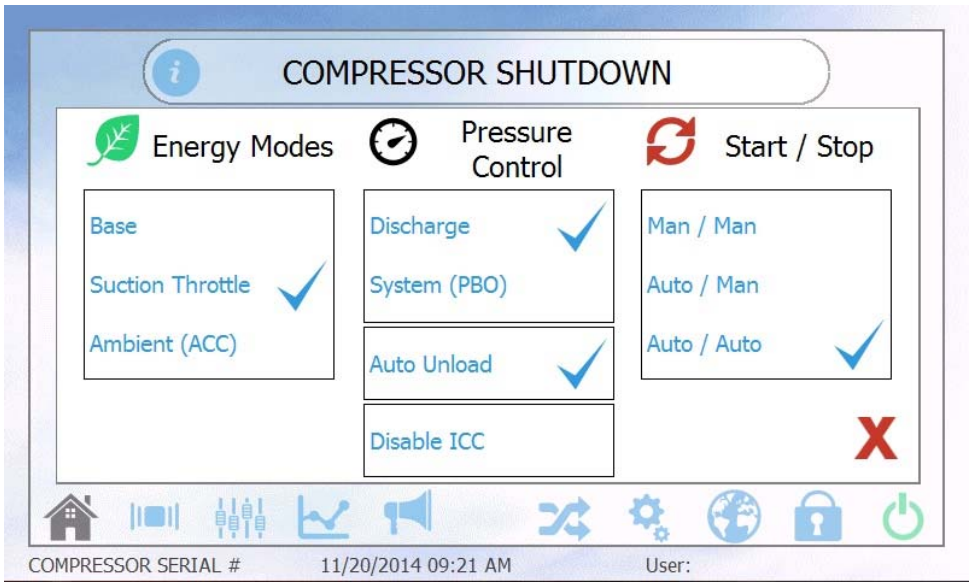

FIGURE 6-25
MODE SELECTION SCREEN - AUTO/AUTO

Manual Unload Icon

A convenient feature found on the R1000 **HOME** Screen is the manual unload icon **.** The subject icon can be used at any time regardless of the operational mode selected to manually unload the compressor.

Integrated Compressor Control (ICC)

ICC controls multiple compressors to maintain a constant system pressure via a master/slave configuration without the necessity of any external devices. When several compressors are configured to operate in ICC, one is chosen to be the master. Since any of the R1000 control panels can be configured to be the master (without an external device) it will also act as its own slave.

What do you need to utilize ICC?

1. Multiple R1000 ICC equipped FS-Elliott compressors.
2. Ethernet connection between all R1000 control panels to be operated in ICC.

How does ICC work?

ICC follows a simple trim compressor theory. A lead machine is assigned, and the remaining compressors act as the lag or trim machines. The lead machine will load as needed until 100% capacity. If the system demand requires additional capacity, the first trim machine in line will begin to load until 100% capacity. The remaining trim machines will follow suit until complete 100% capacity.

All of the machines will be operating in energy mode = suction throttle and pressure mode = system (PBO). Again, the focus is on energy efficiency and using the minimum amps while satisfying system pressure and system demand.

Similarly, if system demand is decreasing, the last trim machine to have loaded will begin to throttle back until the machine reaches the min amps setpoint. If system demand requires less capacity still, then the next trim machine throttles to min amps and simultaneously the last trim machine begins an unload timer. This will continue until all compressors are throttled back to min amps and/or unloaded.

The units will throttle/unload until system demand increases. Alternatively, if system demand remains satisfied, the units will shut down based upon a predetermined period of unload time.

How is ICC configured?

Reference Chapter 3 of this manual which details the ICC configuration procedure.

COMPRESSOR CONTROL SETTINGS AND CONFIGURATION

Discharge Pressure and Target

After the controller is powered on the controller displays the **HOME** Screen. The discharge pressure target and adjustment is found on the Home Screen.

NOTE

Discharge Pressure control is the default operating mode. If System (PBO) Pressure control is selected, please see the section below.

The Discharge Pressure Target can be changed by pressing the and icons or selecting the target itself and entering the target pressure through a numeric keypad, as shown in Figure 6-26. The Discharge Pressure Target utilizes the unloading valve to maintain this pressure at the discharge of the air compressor. It is recommended that the Discharge Pressure Target match the design discharge pressure of the compressor. If the Discharge Pressure Target is set too high, a surge condition can occur. The Discharge Pressure Target can be lowered below the design discharge pressure without surge occurrence.

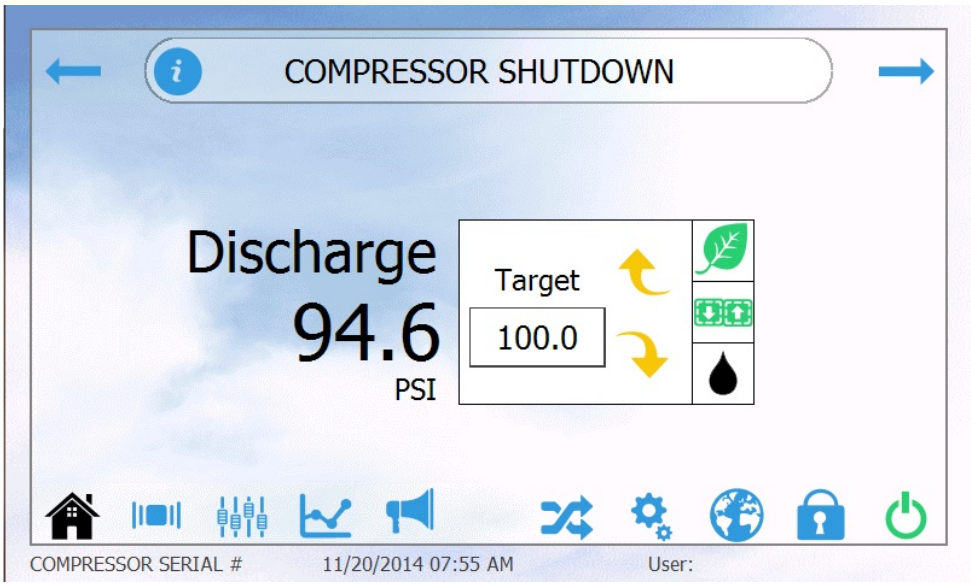

FIGURE 6-26
HOME SCREEN - DISCHARGE PRESSURE CONTROL

System Pressure and Target

If the desired method of control is PBO, the operator must enable PBO as described above in the Methods of Control section. Once PBO has been selected, the screen shown in Figure 6-27 will be the control panel's new **HOME** Screen.

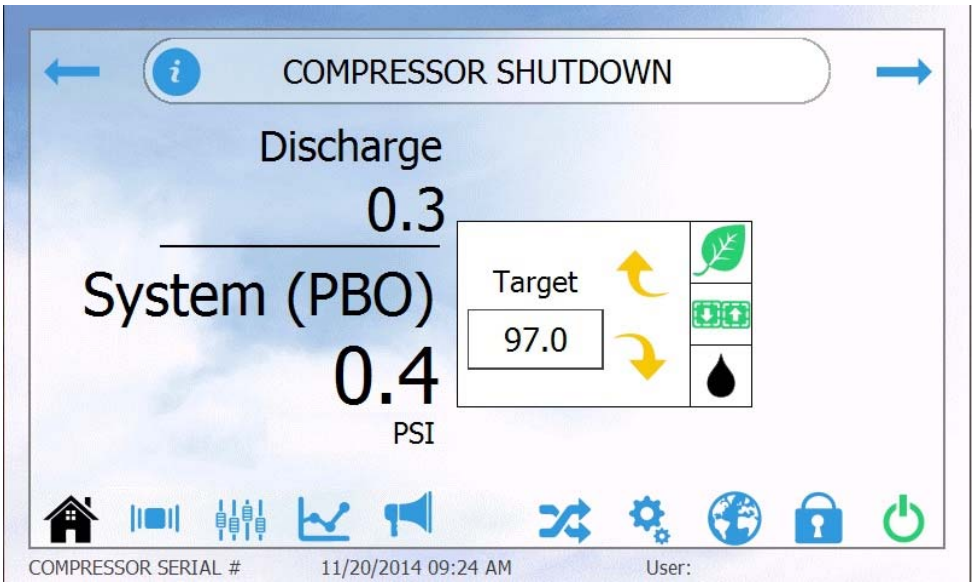

FIGURE 6-27
HOME SCREEN - SYSTEM PRESSURE CONTROL

As shown in the figure above, the operator will have the ability to raise and lower the system pressure setpoint by pushing the and icons or selecting the target and entering the target pressure through a numeric keypad. The control system will utilize a dynamic discharge pressure setpoint to maintain the desired system pressure.

ICC System Pressure and Target

If the desired method of control is ICC, the operator must enable ICC as described above in the Methods of Control section. Once ICC has been selected, the screen shown in Figure 6-28 can be used to adjust ICC system pressure target.

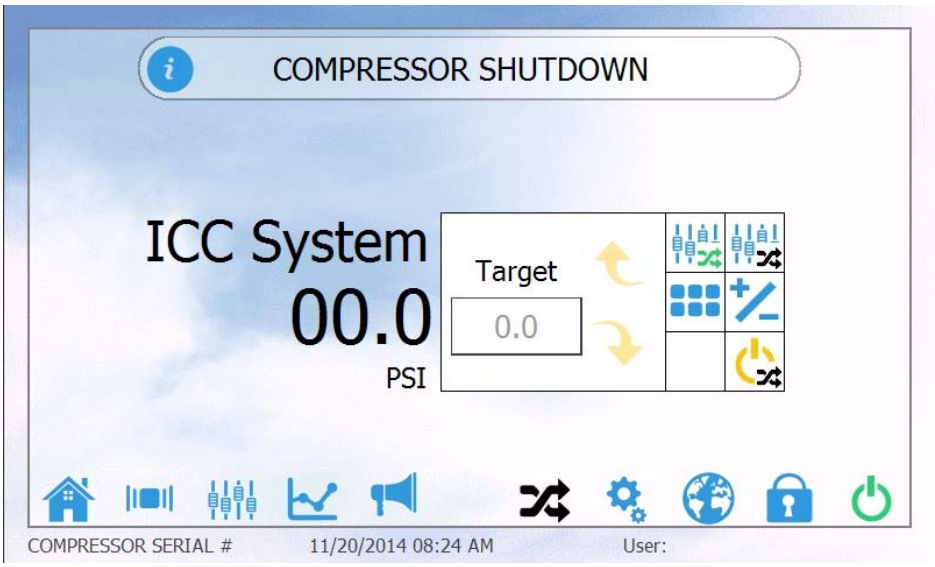

FIGURE 6-28
ICC HOME SCREEN - SYSTEM PRESSURE TARGET

As shown in the figure above, the operator will have the ability to raise and lower the system pressure setpoint by pushing the and icons or selecting the target and entering the target pressure through a numeric keypad. The control system will utilize a dynamic discharge pressure setpoint to maintain the desired system pressure.

Auxiliary Oil Pump Settings

The operator can adjust the settings of the Auxilairy Oil Pump (AOP) by accessing the Oil System Settings Screen as described above in the Operator Interface section. Figure 6-29 illustrates the Oil System Settings Screen. From this screen the operator can select the AOP mode of operation (Normal, Circulate or Test), adjust the AOP Shutoff Pressure and adjust the Cold Oil Temperature Setpoint. A detailed describe of all modes of operation and setpoint can be found below.

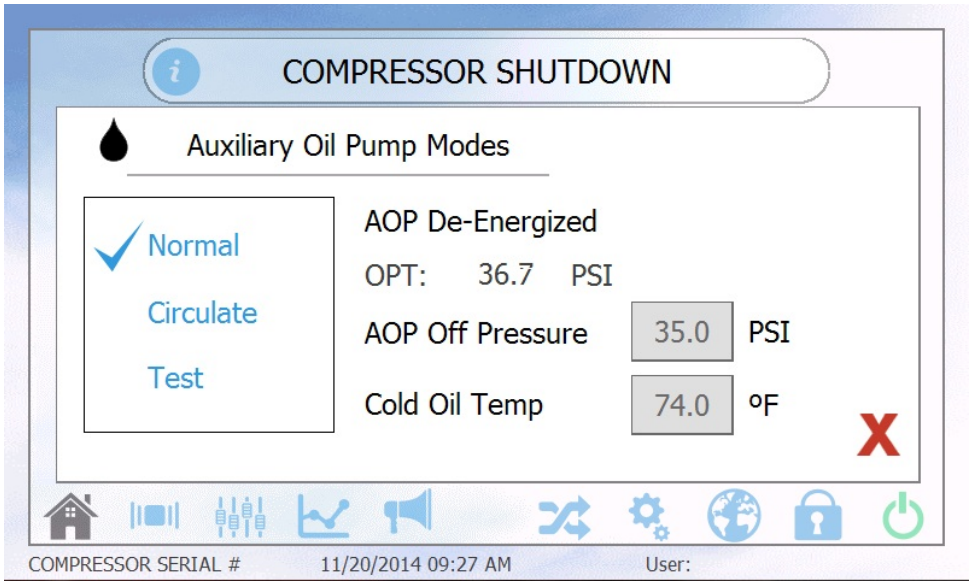

FIGURE 6-29
AUXILIARY OIL PUMP SCREEN

<u>Normal Mode</u> The operator can place the AOP into a normal mode of operation by checking normal. When the AOP is in a normal mode of operation the controller will energize the AOP anytime a start or stop command is requested. Normal mode of operation will result in automatic control of the AOP.

<u>Circulate Mode</u> The operator can place the AOP into a circulate mode of operation by checking circulate. When the AOP is in circulate mode the controller energizes the AOP while the compressor is shutdown. When the compressor is in a running state, the AOP will operate as if in normal mode. The purpose of circulate mode is to continually circulate the oil while in the shutdown state.

NOTE

The Seal Air Pressure Transmitter (SAPT) must be satisfied for circulate mode to operate continuously. If SAPT is not satisfied, the AOP will shut off after 20 minutes of operation.

Test Mode — The operator can place the AOP into a test mode of operation by checking test. When the AOP is in test mode the controller will energize the AOP for a period of one minute. Once the one minute period has expired, the controller will force the mode of operation to normal mode.

NOTE

Manual operation of the auxiliary oil pump is required to test the pump (check rotation) and check the operation of the lube system before initial start-up. Otherwise, the auxiliary oil pump should operate in the normal mode.

AOP Off Pressure — This setpoint determines the pressure at which the auxiliary oil pump is permitted to shut off during startup when both the Auxiliary Oil Pump and the Main Oil Pump are running simultaneously. It is strongly recommended that this setpoint is not altered without FS-Elliott service guidance.

Cold Oil Temp — The permissive start setpoint determines the oil temperature at which the compressor can be started. The R1000 will not permit the compressor to start until this oil temperature is attained. It is strongly recommended that this setpoint is not altered without FS-Elliott service guidance.

CAUTION

It is strongly recommended that the compressor not be operated with a failed main oil pump. If the auxiliary oil pump should stop under these conditions, such as an electrical power failure, etc., oil starvation will occur resulting in bearing damage and severe mechanical damage to the compressor can occur.

Compressor Settings

By accessing the **SETTINGS** icon as described above in the Operator Interface section, the operator can adjust various operating parameters related to compressor control. The operator can scroll through the various setting(s) screens by using the left ⬅ or right ➡ icons located at the top of the operator interface. Please find below an outline of all adjustable compressor settings.

CAUTION

Changing the compressor setpoints can cause compressor surge and/or bypass the protective devices. Changing the compressor setpoints can result in severe mechanical damage. Please contact your authorized FS-Elliott service representative should you have any concerns regarding the compressor settings.

General Settings

Unloaded IVT Position — This setpoint determines the percentage open that the inlet valve will be while the compressor is unloaded and shutting down. Operator level password required.

SPT Low Pressure Start — This setpoint determines the plant air pressure at which the unit loads, unloads and/or automatically starts. Operator level password required.

Throttle Kick in Margin — This setpoint is utilized when operating in suction throttle or ambient compensation control. This setpoint determines the margin in pressure between the discharge target and discharge actual, before the inlet valve will begin to throttle. Operator level password required.

Hot Motor

The Hot Motor function is set up to protect the motor from damage by limiting the amount of starts over a period of time.

Max Starts Allowed — This setpoint determines the number of starts allowed in a certain time period to protect the motor. Operator level password required.

Starts Time Limit — This setpoint determines the time period between the maximum starts allowed. Operator level password required.

Auto Unload

UVT Unload Position — This setpoint determines the unloading valve position that must be reached to initiate the auto unload timer. Operator level password required.

Time Before Unload — The time before unload setpoint determines the length of time the unloading valve must remain above the UVT unload position setpoint before an auto unload sequence is initiated. Operator level password required.

Surge Line Calculations

The following setpoints are used by the R1000 control system to calculate dynamic pressure and amperage setpoints (control lines) which directly relate to the operation of the inlet and unloading valves. The dynamic setpoints are utilized when the following control methods are selected: **Suction Throttle**, **Pressure Band Optimization** or **Ambient Compensation Control**.

Above Design DPT	This pressure setpoint defines the upper range value of the discharge pressure that the compressor can maintain before exiting the safety margin of the compressor's design range. This is the maximum pressure that the compressor will operate at when utilizing PBO control.
Above Design MAT	This setpoint defines the surge amps of the compressor when operating at the Above Design DPT. The surge amperage in conjunction with the safety margin setpoint determines the throttle limitations of the inlet valve to avoid surge.
Design DPT	This setpoint defines the design operating pressure of the compressor.
Design MAT	This setpoint defines the surge amps of the compressor when operating at the Design DPT. The surge amperage in conjunction with the safety margin setpoint determines the throttle limitations of the inlet valve to avoid surge.
Below Design DPT	The Below Design DPT is the third and final pressure used to determine the throttled control line while operating in PBO.
Below Design MAT	This setpoint defines the surge amps of the compressor when operating at the Below Design DPT. The surge amperage in conjunction with the safety margin setpoint determines the throttle limitations of the inlet valve to avoid surge.
Surge Test Ambient	This temperature setpoint is to be entered at the time the surge tests are performed at the commissioning of the air compressor. This setpoint is the reference point when operating in ACC.
Max MAT SP	This amperage corresponds to the design flow of the compressor. It is calculated using the full load amperage and safety factory of the driver.
Safety Margin	This setpoint value is the margin between the surge line and throttled control line of the compressor.
Surge Increment	The surge increment is the percentage that is added to the current offset when a major surge event occurs.

Current Offset — This is the summation of the safety margin plus increments resulting from major surge events. The current offset indicates the existing operating margin between the surge line and throttled control line of the compressor. This value will increase by the percentage indicated in the surge increment setpoint if a major surge event occurs.

Reset Offset — This button allows the operator to reset the current offset back to its original value which equals the safety margin percentage.

Surge Detection

With the compressor running, the controller will automatically detect a surge event via its surge detection system. The surge event will be indicated on the operator interface as either a minor or major surge event. Below are the adjustable parameters that are used to detect surge.

Pressure Drop — This setpoint is the change in pressure that the controller must see over a period of time to detect a surge event.

Over Time (sec) — This setpoint is the period of time that the controller must see the change in pressure to detect a surge event.

Fast Surge Recovery (Minor Surge)

There are multiple reasons a surge event could occur on a centrifugal compressor. The R1000's fast surge recovery system is designed to minimize disruption of the compressor operation should a surge event occur. If the R1000's surge detection system detects a surge event, an alarm will annunciate, the unloading valve will open by a fixed percentage to alleviate the surge condition and the compressor will automatically reload within a specified recovery time. A max surge count and surge count period are used to determine how many minor surges can occur before a major surge event is indicated. A description of all minor surge settings can found below.

Max Surge Count — This setpoint determines the number of minor surges that can occur before a major surge event indicated.

Surge Count Period (sec) — If the number of minor surges exceeds the max surge count within this time period, a major surge event will occur.

Recovery Time (sec) — This setpoint value indicates the time that will elapses before the compressor automatically reloads after a minor surge.

UVT Offset — This setpoint determines the percentage that the controller will offset (or open) the unloading valve when a minor surge occurs.

Major Surge Recovery

If the number of minors exceeds the max surge count value within the surge count period, the R1000 will indicate a major surge event. After a major surge event occurs, the controller will fully open the unloading valve. If operating in suction throttle or ACC, the R1000 will increment the throttled control line and will reload the compressor once the major surge event recovery timer has expired. If operating in base mode, the unloading valve will remain fully open until an operator resets the alarm condition.

Recovery Time (sec)	This setpoint value indicates the time that will elapses before the compressor automatically reloads after a major surge (not applicable to base mode).
UVT Open	This setpoint is the percentage the unloading valve will open when a major surge event occurs. The default value is 100% open. It is strongly recommended that this setpoint is not altered without FS-Elliott service guidance.

ICC Master Control Settings Screen 1

The following settings are used to manage multiple ICC parameters.

Sequencing On	This feature, when selected, enables sequencing control.
Order	Accessing the order menu allows the user to define unit order.
Sequencing Mode	This allows the user to select a between the sequencing modes available (normal mode or time leveling).

ICC Master Control Settings Screen 2

The following settings are used to manage multiple ICC parameters.

Pressure Error	This is the allowable pressure difference between the individual unit system pressure transmitters.
Low System Pressure Bias	The percentage of the difference between target system pressure and actual system pressure that is calculated and added to the individual system pressure target to increase capacity. This is applicable in a low system pressure condition.
High System Pressure Bias	The percentage of the difference between target system pressure and actual system pressure that is calculated and added to the individual system pressure target to decrease capacity. This is applicable in a high system pressure condition.
Delay Next Start if Cold Oil Timeout	The delay that the master waits before checking cold oil on a next order unit if the current unit has cold oil when commanded to start.

Network Comm Timeout — The time delay before a unit is removed from the ICC network during a communication error.

ICC Slave Control Settings Screen

The following settings are used to manage multiple ICC parameters.

Pressure Step Timeout — The resetting time interval that the low and high system pressure bias is repeatedly calculated.

Delay before Unload Timeout — The time delay before the master will issue an unload command to a slave compressor.

Delay before Auto Shutdown — The time delay before the master will issue a shutdown command to a slave compressor.

Compressor Configuration

By accessing the **CONFIGURATION** Screen as described in the operator interface section, the operator can adjust various configuration parameters related to the compressor control. These parameters include the tuning of the Inlet and Unloading valves, the mode of operation for both the Inlet and unloading valves and various timers used to control the compressor. The operator can scroll through the various configuration screen(s) by using the left ← or right → icons located at the top of the operator interface. The operator can also view the position of the inlet and unloading valves from this screen as shown in Figure 6-30.

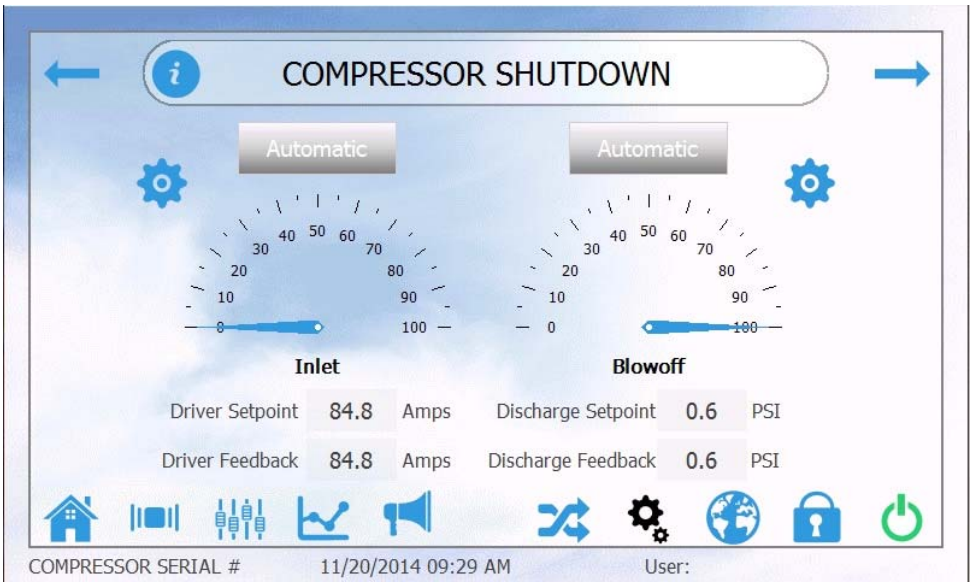

FIGURE 6-30
CONFIGURATION SCREEN

Valve Mode of Operation

Both the inlet valve/guide vanes and unloading valve can be configured to operate in manual or automatic control. The valve control modes are described below.

Inlet Valve/Guide Vanes - Manual Operation

Manual Operation of the inlet control valve/guide vanes allows the operator to manually adjust the subject valve. Manual control of the inlet control valve/guide vanes can be obtained by pushing the **AUTOMATIC** button located above the inlet valve gauge. After **MANUAL** is displayed the up and down icons will appear as shown in Figure 6-31. The arrows can be pressed repeatedly to change the position of the valve manually. Manual operation of the inlet valve is particularly useful when the compressor is not in operation and the operator wishes to stroke the valve to verify proper operation.

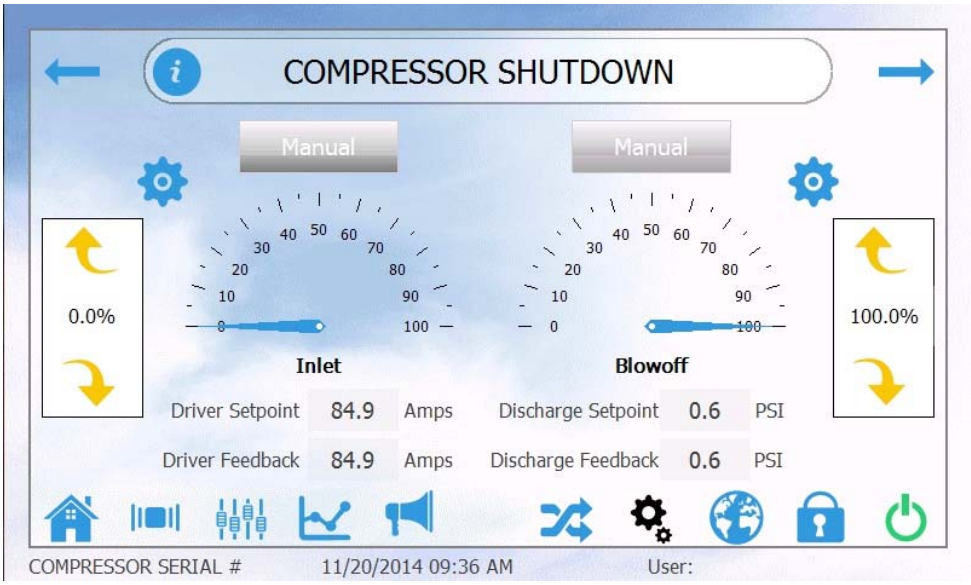

FIGURE 6-31
VALVE CONTROL - MANUAL MODE

NOTE

Unattended manual operation **is not** recommended as changes in ambient conditions will not be automatically compensated for. This can have an adverse effect on the compressor operation and driver load.

NOTE

Manually closing the inlet control valve/ guide vanes too far during compressor operation may result in compressor surge.

Inlet Valve/Guide Vanes - Automatic Operation

Automatic operation of the inlet control valve/guide vanes allows the control panel to automatically adjust the position of the valve to obtain the desired driver load/flow. Automatic control can be obtained by selecting the **AUTOMATIC** button above the inlet valve gauge.

NOTE

The inlet valve defaults to AUTOMATIC control on power up.

Unloading Valve - Manual Operation

Manual operation of the unloading control valve allows the operator to manually adjust the compressor discharge pressure. Manual control of the unloading control valve can be obtained by pushing the **AUTOMATIC** button located above the unloading gauge. After **MANUAL** is displayed, the up and down icons will appear as shown in Figure 6-30. The arrows can be pressed repeatedly to change the position of the valve. The compressor discharge pressure will change accordingly. Manual operation of the unloading valve is particularly useful when the compressor is not in operation and the operator wishes to stroke the valve to verify proper operation.

NOTE

Unattended manual operation **is not** recommended as changes in the system demand will not be automatically compensated for. This can have an adverse effect on the compressor operation and potentially result in a surge condition.

NOTE

Manually closing the unloading control valve too far during compressor operation may result in compressor surge.

Unloading Valve - Automatic Operation

Automatic operation of the unloading control valve allows the control panel to automatically adjust the compressor discharge pressure. The control panel will automatically maintain the compressor discharge pressure at the desired setpoint. Automatic control can be obtained by selecting the **AUTOMATIC** button above the unloading valve gauge.

NOTE

The unloading valve defaults to AUTOMATIC control on power up.

Valve Tuning

Both the inlet and unloading valves utilize **Proportional Integral Derivative** (PID) control. These PID loops may need to be tuned during the commissioning of the compressor to ensure proper and efficient valve control. This section will outline the tuning parameters for the inlet valve, unloading valve, throttle and system PIDs. To access the tuning parameters select the tuning icon located to either side of the valve gauge displays.

Inlet Valve PID — This PID is used to control/tune to inlet valve/guide vane to the driver setpoint.

Throttle PID — The PID is used to control/tune the inlet valve throttling when utilizing suction throttle, pressure band optimization or ambient compensation control.

Unloading Valve PID — This PID is used to control/tune the unloading valve to the desired discharge pressure setpoint.

System Pressure PID — This PID is used to control/tune the dynamic discharge pressure setpoint when utilizing pressure band optimization.

Proportional Value — The proportional value (prop value) is a setting that determines the responsiveness of the control valves and control system's PIDs. The standard settings are programmed into the R1000 at the factory; however some applications may require minor adjustments to the proportional setting in the field. As the prop value is decreased the operator can expect to see a faster reaction from the valve and/or PID. As the prop value is increased the operator can expect to see a slower reaction from the valve and/or PID.

NOTE

If the prop value is adjusted too low, the valve will become unstable and create an oscillation. If the prop value is adjusted too high, the valve will become sluggish and react too slowly.

Reset Value — The reset value (repeats per minute) is another setting that determines the responsiveness of the control valves and control system's PIDs. The standard settings are programmed into the R1000 at the factory; however, some applications may require minor adjustments to the reset value in the field. As the reset value is decreased, the valve and/or system PID will be slower returning to its desired operating point. If this value is adjusted too low, the valve and/or system PID will become sluggish and move too slowly. If the reset value is increased, the valve and/or system PID will return to the desired operating point faster. If this setting is too high, the valve will become unstable and could continuously oscillate.

Stroke Rate — The stoke rate is another setting that determines the responsiveness of the control valves. There are three stroke rates that can be used to adjust the responsiveness of the valves (startup, running and shutdown). The higher the stroke rate, the faster the valve responds and the lower the stroke rate, the slower the valve will respond. A description of all three stroke rates and when utilized can be found below:

- Startup — This stroke rate is used during the startup and initial loading of the compressor.
- Running — This stroke rate is used while the compressor is in the running state.
- Shutdown — This stroke rate is used while the compressor is in the unloading or shutdown state.

Timer Settings

The operator can view the status of several control timers by accessing the **CONFIGURATION** Screen and using the left ⟵ or right ⟶ icons. It is strongly recommended that the operator does not alter these timers without FS-Elliott service guidance. A detailed descriptions of the timers can be found below.

Driver Delay — This timer allows the auxiliary oil pump to run prior to the start of the main motor. This time is used to raise the oil system pressure and properly pre-lube the air compressor before startup.

Cold Oil Delay — Once the driver delay timer has expired, the control system will determine if the inlet oil temperature is above the cold oil start setpoint. If the inlet oil temperature is less than the cold oil start setpoint, the cold oil delay timer is initiated. This time period is utilized to allow the inlet oil temperature to increase as it is circulated through the compressor. If the timer expires, the compressor will abort start on a cold oil alarm. If the lube oil does not climb above the cold oil setpoint within this time, the compressor oil heater should be inspected for proper functionality.

Vibration Bypass — This timer bypasses the vibration protection during startup and acceleration of the main driver.

Acceleration Time — This timer allows the driver to achieve its full rated speed before the compressor begins to position the valves to create pressure.

Coastdown Delay — This timer begins after the main motor stop signal is sent. During this time period, the main motor will be coasting down to a full stop. During the duration of this timer, the compressor will be locked out from being restarted.

Cooldown Delay — This timer begins after the coastdown delay timer expires. During this time period, the auxiliary oil pump will continue to run to cool the compressor after running.

Auto Start Delay — While the compressor is in WAITNG TO AUTOSTART, the system pressure must fall below the SPT Low Start setpoint before the compressor will begin the start sequence. This timer allows multiple compressors to make up for the loss of system pressure before bringing another compressor online if not necessary.

Run Unloaded Before Auto Stop — If the compressor is running in an unloaded state and auto stop is configured, this timer must expire before an auto stop occurs.

Pulse Start — This timer is the pulse time of the start signal if the switch gear requires a momentary pulse for the start and stop signals.

Pulse Stop — This timer is the pulse time of the stop signal if the switch gear requires a momentary pulse for the start and stop signals.

SAPT Low Timer — This timer begins while the auxiliary oil pump is in either test or circulate mode and there is a loss of seal air pressure. After this timer expires, the auxiliary oil pump will shut off to prevent lube oil from migrating into the compressor gear case.

HATS Delay Time — This timer bypasses the interstage air temperature alarm and trip on startup due to the possibility of high air temperature in the interstage piping after a previous operation period.

OFDP Alarm Delay — This timer bypasses the oil filter differential pressure alarm on startup. The oil filter differential pressure can become elevated on startup due to the sudden rise in oil pressure from the auxiliary oil pump initializing.

R1000 I/O SIGNALS

Analog I/O Signals

The R1000 I/O signals are displayed on the operator interface. These signals can be viewed on the **I/O SIGNALS** Screen as shown in Figure 6-32. The operator can scroll through the various I/O signals by using the left ← and right → icons located at the top of the operator interface.

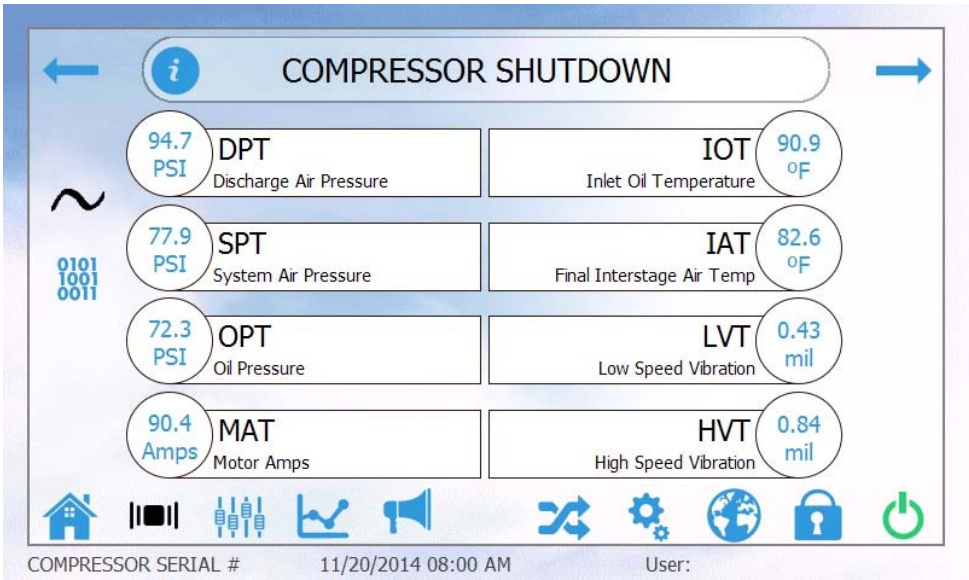

FIGURE 6-32
ANALOG I/O SCREEN

The operator can access an Analog Configuration Screen by pressing on any individual analog input. An example of an Analog Configuration Screen can be found in Figure 6-33.

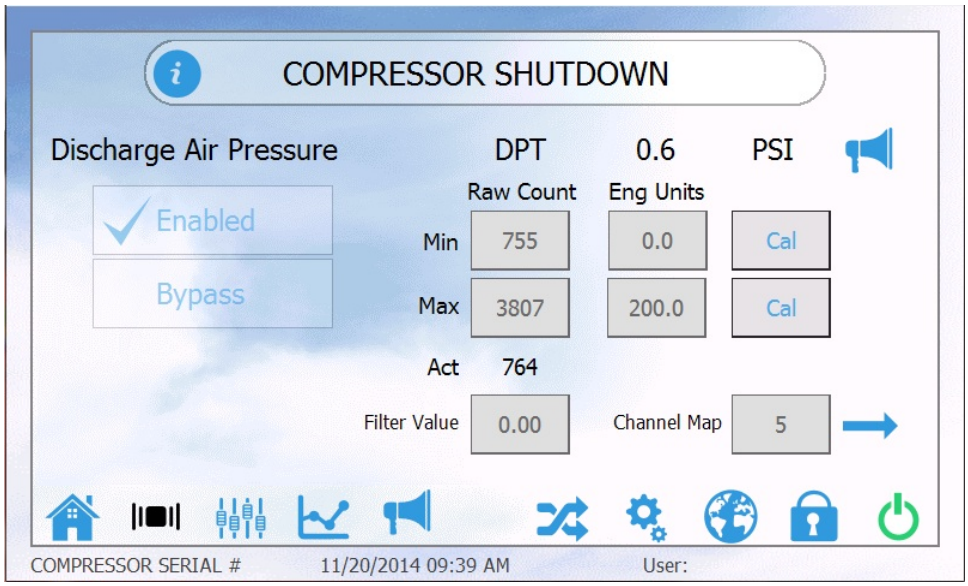

FIGURE 6-33
ANALOG CONFIGURATION SCREEN

The following parameters can be accesed through the Analog Configuration Screen. It is strongly recommended that these settings are not altered without FS-Elliott service guidance.

Enabled	The setting is used to enable and disable the analog channel.
Bypass	This setting is used to bypass an analog input channel if the operator needs to perform maintenance on an input while the compressor is running.
Min Raw Count	This field displays the minimum raw count of the analog input before it is scaled in the controller.
Max Raw Count	This field displays the maximum raw count of the analog input before it is scaled in the controller.
Min Eng Units	This field displays the minimum value used to scale the analog input range to the desired units (English/Metric).
Max Eng Units	This field displays the maximum value used to scale the analog input range to the desired units (English/Metric).
Act Raw Count	This field displays the actual raw count of the analog input before it is scaled in the controller.

Filter Value — This field displays the adjustable filter value for the analog input. This value can be changed either higher or lower to filter RFI affecting an analog signal.

Cal — This button allows the operator to calibrate the min and max values of an analog input's range.

Channel Map — This field displays the channel that an analog input is mapped to.

By pressing the return icon, the operator can exit the Analog Input Configuration Screen and return to the Analog I/O Screen.

By pressing the icon located at the top of the Analog Configuration Screen, the operator can access the Analog Alarm/Trip Configuration Screen shown in Figure 6-34. This screen allows the operator to modify the compressors alarm and trip values. The modifications include enabling/disabling alarms and trips and modifying the value at which the compressor will annunciate an alarm and/or trip. If an alarm/trip is enabled, the check mark icon will show up to the left of the box for each action.

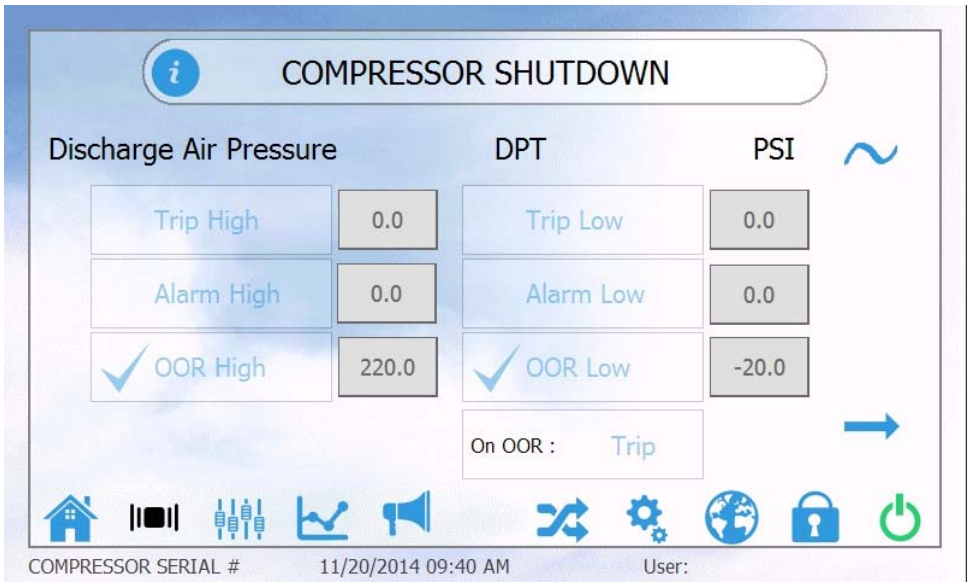

FIGURE 6-34
ANALOG ALARM/TRIP CONFIGURATION SCREEN

Figure 6-34 allows the operator to view and change an analog input's alarm and trip settings. The following parameters can be accesed through the analog input's Alarm and Trip Configuration Screen. It is strongly recommended that these settings are not altered without FS-Elliott service guidance.

Trip High — This value determines the high trip setpoint at which the air compressor will initiate an emergency shutdown while running.

Alarm High — This value determines the high alarm setpoint at which the air compressor will annunciate an alarm.

OOR High — This value determines the high out of range setpoint at which the air compressor will annunciate an alarm or trip indicating a transmitter failure.

Trip Low — This value determines the low trip setpoint at which the air compressor will initiate an emergency shutdown while running.

Alarm Low — This value determines the low alarm setpoint at which the air compressor will annunciate an alarm.

OOR Low — This value determines the low out of range setpoint at which the air compressor will annunciate an alarm or trip indicating a transmitter failure.

On OOR — This selectable parameter can be toggled to choose the desired action is if an instrument exceeds the high or the low out of range (OOR) values. All critical instruments should trip when an OOR situation is reached. Standardly all non-critical OOR situations will result in an alarm.

WARNING

Incorrect trip and alarm settings can lead to damage on the air compressor; therefore, it is strongly recommended that a qualified FS-Elliott service representative be contacted before the user alters the alarm and/or trip settings.

By pressing the return → icon, the operator can exit the Analog Alarm/Trip Configuration Screen and return to the Analog I/O Screen.

Table 6-1 gives a description of the abbreviations that are displayed on the Analog I/O Screens. Several of the data symbols are optional and may not apply to every compressor.

TABLE 6-1 - Analog I/O Descriptions	
Temperature Transmitters (°F)	
IAT	Final Interstage Air Temperature Transmitter (CRITICAL)
IOT	Inlet Oil Temperature Transmitter (CRITICAL)
IMT	Driver Inboard Bearing Temperature Transmitter
OMT	Driver Outboard Bearing Temperature Transmitter
SMT	Motor Stator Temperature Transmitter
FIT	First Interstage Air Temperature Transmitter
ATT	Inlet Air Temperature
ACT	Aftercooler Air Temperature Transmitter

Pressure Transmitters (PSIG)	
DPT	Discharge Air Pressure Transmitter (CRITICAL)
SPT	Plant Air System Pressure Transmitter (CRITICAL)
OPT	Oil Pressure Transmitter (CRITICAL)
FDT	First Stage Discharge Pressure Transmitter
SDT	Second Stage Discharge Pressure Transmitter
SAPT	Seal Air Pressure Transmitter

Vibration Transmitters (MILs)	
LVT	Low Speed Pinion Vibration Transmitter (CRITICAL)
HVT	High Speed Pinion Vibration Transmitter (CRITICAL)
HVT-2	High Speed Pinion Vibration Transmitter
IDT-X	Inboard Motor Vibration Transmitter
ODT-X	Out board Motor Vibration Transmitter

Other Analog Transmitters	
MAT	Motor Amperage Transmitter (amps) (CRITICAL)
IVT	Inlet Valve Position (% Open)
UVT	Unloading Valve Position (% Open)

Digital I/O Signals

The R1000 digital I/O can be found within the I/O Signals Screen as shown in Figure 6-35. To access the Subject Screen, press the digital I/O icon located on the left side of the I/O Signals Screen. Scroll through the various I/O signals by using the left and right icons located at the top of the operator interface.

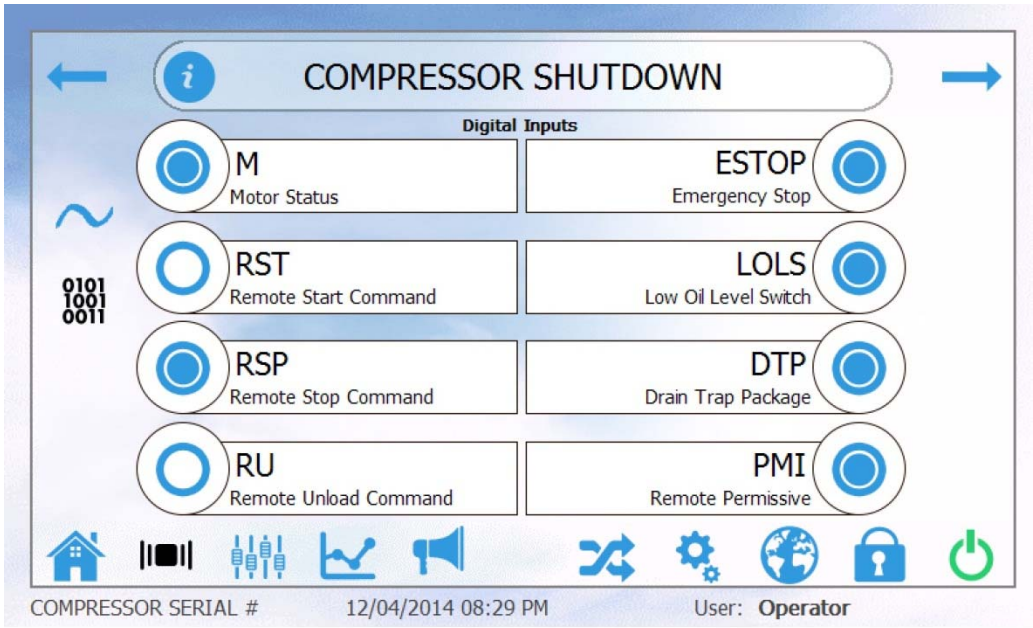

FIGURE 6-35
DIGITAL INPUT TEST SCREEN

Figure 6-35 shows the Digital Input Screen for the R1000. This screen displays the enabled digital inputs that are programmed in the R1000 configuration. The status of the input is indicated by a blue circle. If the blue circle has a white center, the digital input is de-energized or is open. If the blue circle has a blue center, the digital input is energized or is closed.

The operator can access a Digital Configuration Screen by pressing on any individual digital input. An example of a Digital Configuration Screen can be found in Figure 6-36.

FIGURE 6-36
DIGITAL INPUT CONFIGURATION SCREEN

Figure 6-35 allows the operator to view and change the digital input's configuration. The following parameters can be accesed through the Digital Input Configuration Screen.

Enabled	The setting is used to enable and disable the digital channel.
Normally Open	This allows the operator to change the state of the digital input to either Normally Open or Normally Closed.
Alarm	This option allows the operator to select the action of the digital input to alarm upon change of state.
Trip	This option allows the operator to select the action of the digital input to trip upon change of state.
Alarm on Energize	This option allows the operator to configure an alarm that will annunciate each time the input is energized.

If the R1000 configuration has more than 8 digital inputs, the operator can access by pressing the → key at the top right of the screen.

Table 6-2 gives a description of the abbreviations that are displayed on the Digital I/O Screens. Several of the data symbols are optional and may not apply to every compressor.

TABLE 6-2 - Digital Input Descriptions	
M	Motor Status
RST	Remote Start
RSP	Remote Stop
RU	Remote Unload
ESTOP	Emergency Stop
LOLs	Low Oil Level Switch
DTP	Drain Trap Package
AFDPS	Air Filter Differential Pressure Switch
OFDPS	Oil Filter Differential Pressure Switch
PMI	Permissive Input

To access the Digital Output Screen, the operator can use the → icon to scroll through the screens. The Digital Output Screen is shown in Figure 6-37.

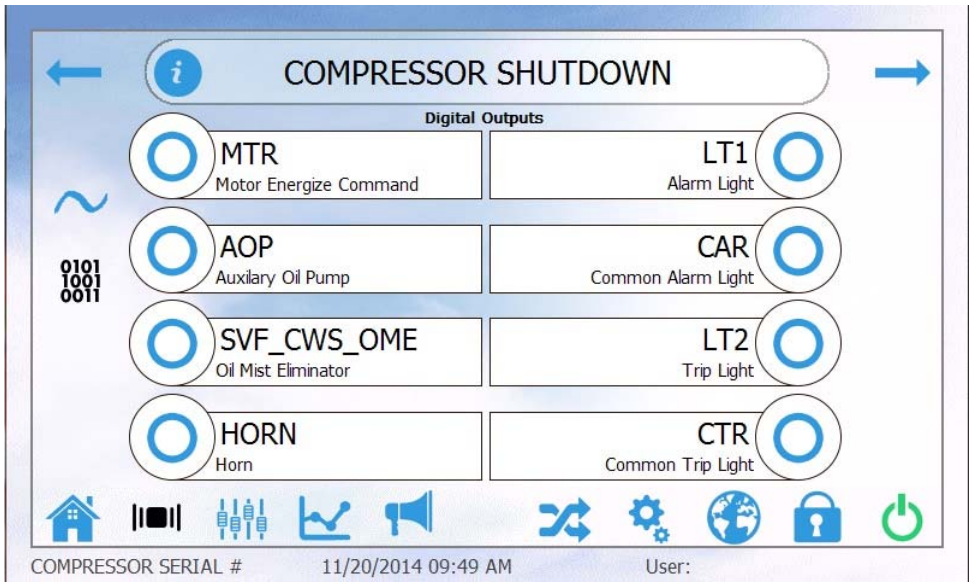

FIGURE 6-37
DIGITAL OUTPUT SCREEN

Figure 6-37 shows the Digital Output Screen for the R1000. This screen displays the enabled digital outputs that are programmed in the R1000 configuration. The status of the output is indicated by a blue circle. If the blue circle has a white center ○, the digital output is de-energized or is open. If the blue circle has a blue center ◉, the digital output is energized or is closed.

The operator can access a Digital Configuration Screen by pressing on any individual digital output. An example of a Digital Configuration Screen can be found in Figure 6-38.

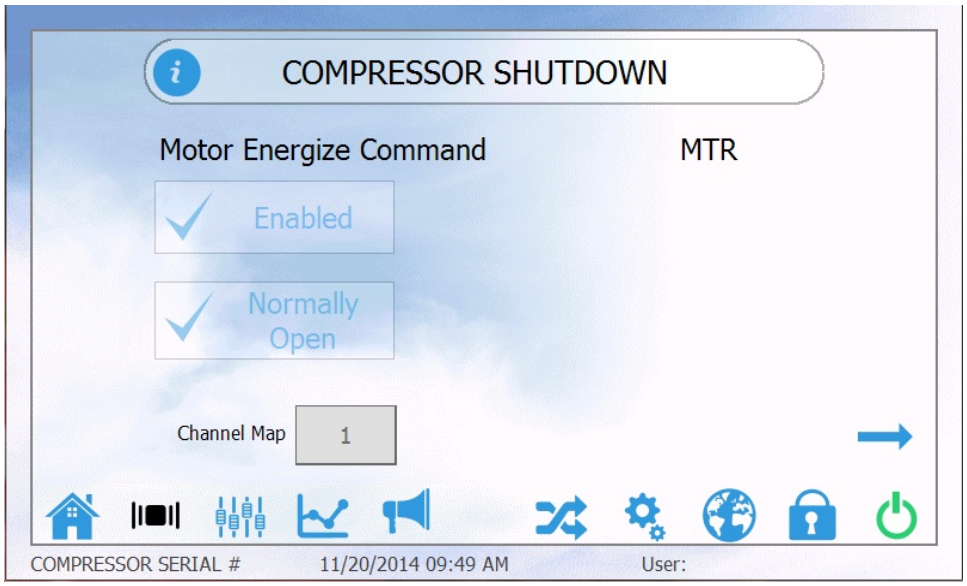

FIGURE 6-38
DIGITAL OUTPUT CONFIGURATION SCREEN

Table 6-3 gives a description of the abbreviations that are displayed on the Digital I/O Screens. Several of the data symbols are optional and may not apply to every compressor.

TABLE 6-3 - Digital Output Descriptions	
MTR	Main Motor Start/Stop
AOP	Auxiliary Oil Pump
CR3	Cooling Water Package (CWS/SVF/OME/MSH)
HORN	Horn
LT1	Alarm Light
CAR	Common Alarm Relay
LT2	Trip Light
CTR	Common Trip Relay
MSP	Momentary Stop
MST	Momentary Start

R1000 GENERAL INFORMATION

Various information and functions can be accessed from the icon. This would include firmware revision codes, service assistance contact information, runtime information, communication settings, historical data and setpoint configurations. The operator can use the or icons to scroll through the various information screens.

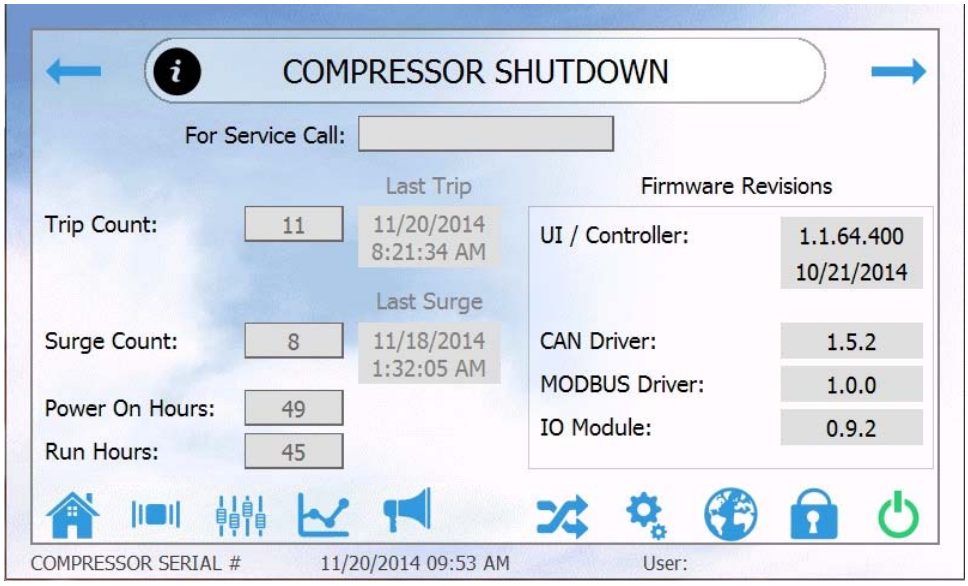

FIGURE 6-39
COMPRESSOR INFORMATION SCREEN

The following information is found on Figure 6-39.

Trip Count	This field displays the total amount of trips that the controller has recorded.
Surge Count	This field displays the total amount of surges that the controller has recorded.
Power On Hours	This field displays the total time that the controller has been powered on.
Run Hours	This field displays the total time that the compressor has run.
Last Trip	This displays the last date and time the compressor has tripped.
Last Surge	This displays the last date and time the compressor has surged.
Firmware Rev	This displays various firmware revision codes.

Figure 6-40 shown below details the second of the three Information Screens.

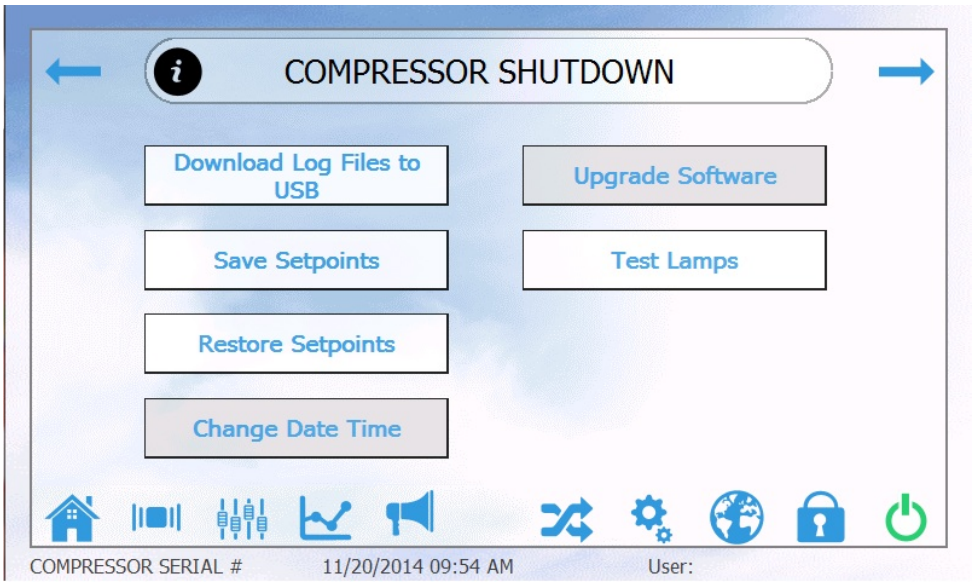

FIGURE 6-40
COMPRESSOR INFORMATION SCREEN

<u>Download Logs Files to USB</u> - In order to download the historical data to a USB drive, perform the following steps:

1. Insert a USB drive into the USB port located in the front door of the R1000 enclosure.

2. Access the screen shown in Figure 6-40 and press the Download Log Files to USB button.

3. Once the download is complete as shown in Figure 6-40, the USB drive can be safely removed.

4. Contact your local authorized FS-Elliott service representative to review the history files.

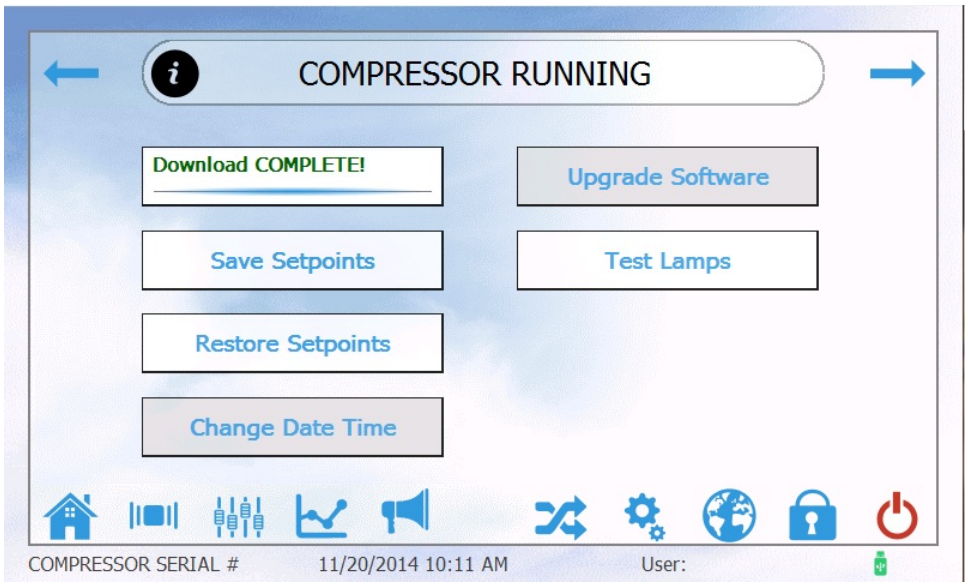

FIGURE 6-41
HISTORY DOWNLOAD COMPLETE

Save/Restore Setpoints - The R1000 control system has the capability to save and restore setpoint configurations. The default configurations are User, Commission and Factory. The factory and commission configurations cannot be modifiied but can be restored. To save a user setpoint configuration follow the steps below:

1. Configure R1000 setpoints as desired.

2. Access the screen shown in Figure 6-40 and press the Save Setpoint button.

3. Check the user configuration as shown in Figure 6-42.

4. Select the location to save the desired configuration to.

NOTE

The operator can select the location by toggling the green icon located next to the save button (USB or internal SD card).

5. Press save.

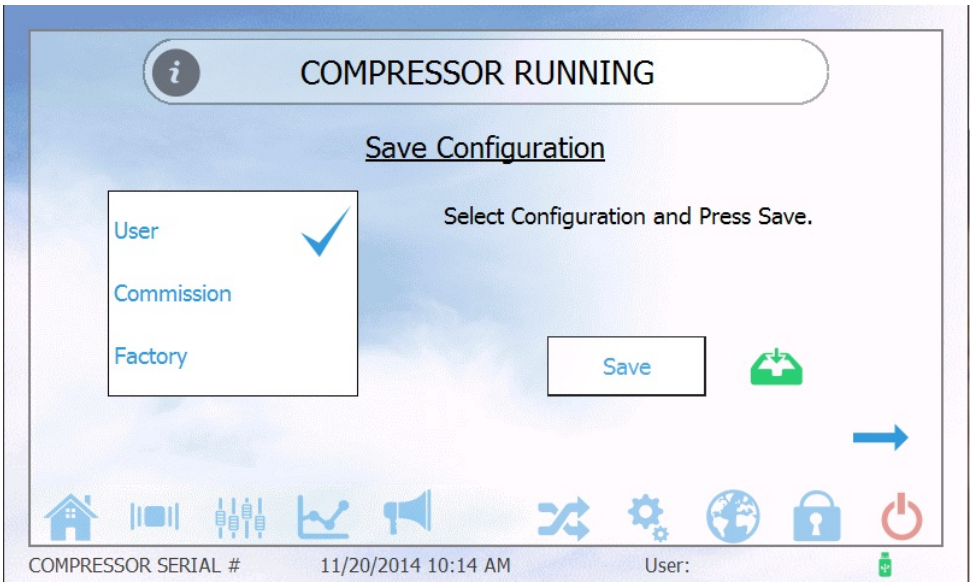

FIGURE 6-42
SAVE CONFIGURATION

To restore a setpoint configuration (factory, commission or user), follow the steps below:

1. Access the screen shown in Figure 6-40 and press the restore setpoints button.

2. Select the desired configuration you wish to restore.

3. Select the location to restore the desired configuration from.

NOTE
The operator can select the location by toggling the green icon located next to the restore button (USB or internal SD card).

4. Press restore.

Change Date and Time - The operator can change the date and time of the R1000 control by pressing the change date and time button shown in Figure 6-40. The Change Date and Time Screen is shown in Figure 6-43.

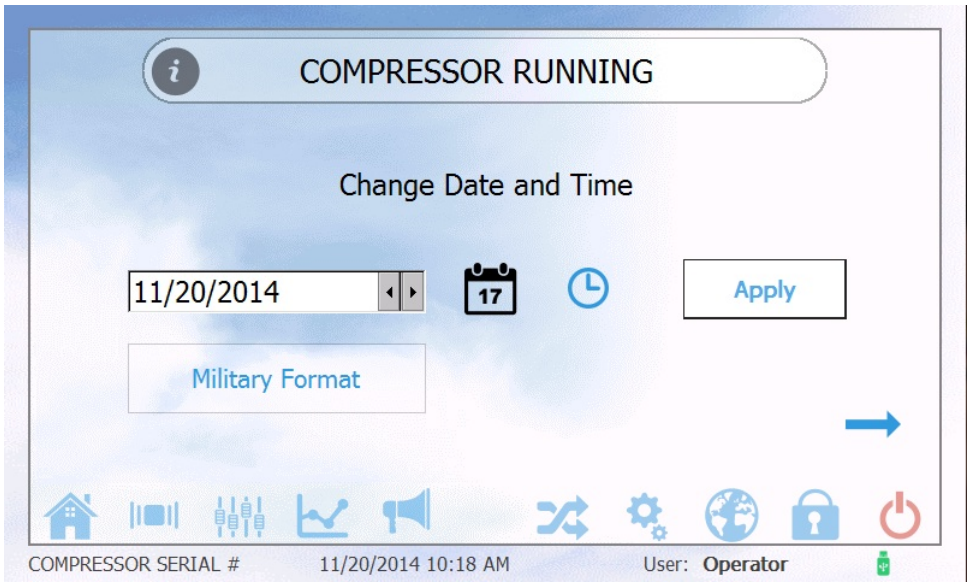

FIGURE 6-43
CHANGE DATE AND TIME

Test Lamps - The operator can access the Test Lamp Screen by pressing the test lamps button shown in Figure 6-39. The Test Lamps Screen is shown in Figure 6-44.

FIGURE 6-44
TEST LAMP SCREEN

Upgrade Software - Contact your local authorized FS-Elliott service representative for assistance.

Figure 6-45 shown below details the third of the three Information Screens.

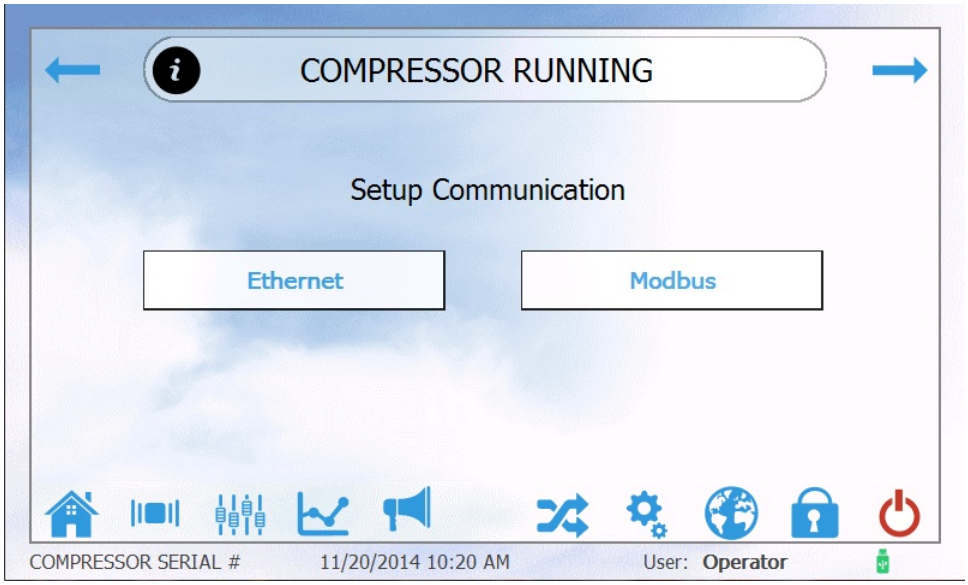

FIGURE 6-45
COMMUNICATION SETUP SCREEN

Modbus Settings - The operator can review the Modbus settings by pressing the Modbus button shown in Figure 6-44. The Modbus Settings Screen is shown in Figure 6-46.

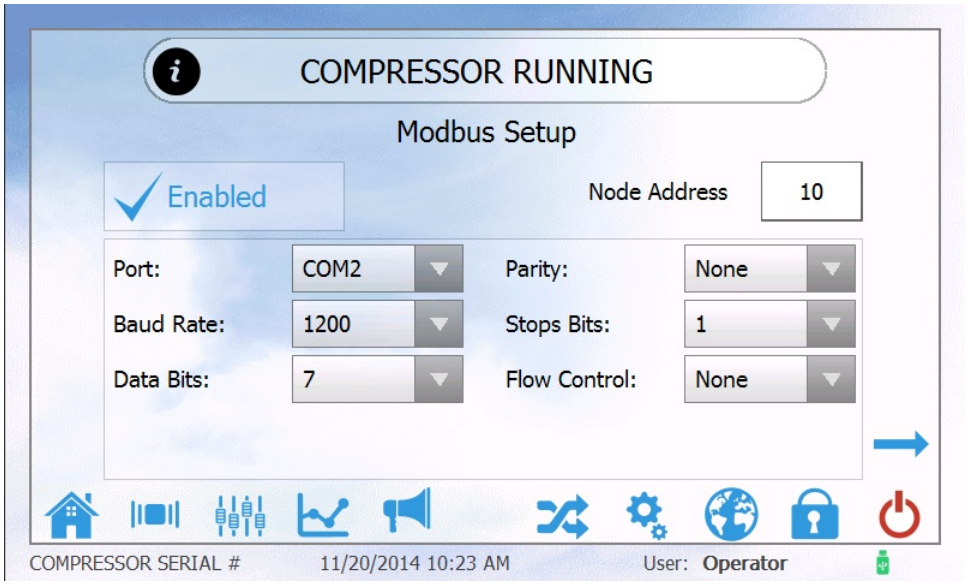

FIGURE 6-46
MODBUS COMMUNICATION SETTINGS SCREEN

Ethernet Settings - The operator can review and change the Ethernet settings by pressing the Ethernet button shown in Figure 6-45. From the screen shown in Figure 6-47, the operator can change the machine name and I/P address settings. Please contact your local authorized FS-Elliott service representative for assistance before changing the Ethernet settings.

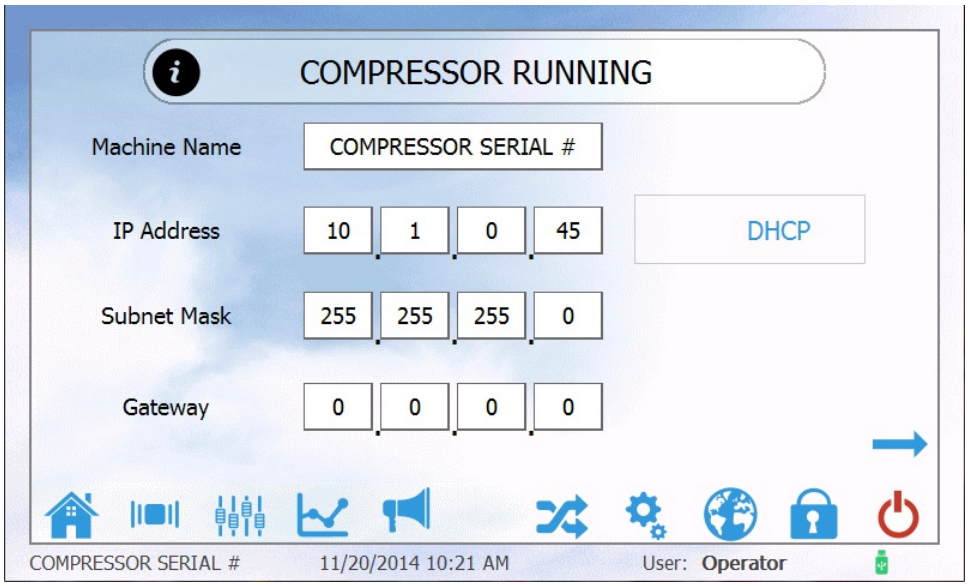

FIGURE 6-47
ETHERNET COMMUNICATION SETUP SCREEN

R1000 LOGIN INFORMATION

In order to change some setpoints, a username and password must be provided. There are three usernames with passwords. The user names are as follows:

- Operator
- Service
- Factory

The Operator username is for use by the operators at site and the password that is used with that username is 9876. All other passwords are for FS-Elliott service engineers and FS-Elliott factory setup.

MODBUS PROTOCOL

R-1000
Standard Modbus List
MOTOR DRIVEN
February 24, 2016

Revision 3

MODBUS SETTINGS

RS-485 / 2 - Wire
Recommended Default Settings
Slave ID: 10*
Baud Rate: 19200* Parity: None* Data Bits: 8* Stop Bits: 1*

* - See note below

NOTE: The R1000 HMI allows the operator to configure Modbus setting such as Baud Rate, Data Bits, Slave ID, Stop Bits, Parity and Flow Control. Below is a list of options when configuring each of these parameters.

Buad Rate: 1200/2400/4800/9600/14400/19200/38400/57600/115200.
Data Bits: 7 or 8.
Parity: None/Odd/Even
Stop Bits: 1/1.5/2
Flow Control: None/Xon/Xoff/Hardware

MODBUS MAP

R1000 - STANDARD MODBUS LIST

LN. ITM	TAG	DESCRIPTION	SIGNAL TYPE (ANALOG / DIGITAL)	SIGNAL FLOW		DATA FORMAT	MODBUS FUNCTION CODE	MODBUS ADDRESS	RANGE		UNIT	LOGIC STATE DEFINITION		REMARKS
				FROM	TO				LOW	HIGH		0	1	
1	MTR	Main Drive Motor Trip/Stop	DIGITAL	R1000	DCS	BOOL	01	00001				OFF	ON	Read Only
2	AOP	Aux. Oil Pump Output	DIGITAL	R1000	DCS	BOOL	01	00002				ON	OFF	Read Only
3	CWS	Cooling Water Solenoid	DIGITAL	R1000	DCS	BOOL	01	00003				OFF	ON	Read Only
4	HORN	Horn Output	DIGITAL	R1000	DCS	BOOL	01	00004				OFF	ON	Read Only
5	LT1	Alarm Light Output	DIGITAL	R1000	DCS	BOOL	01	00005				OFF	ON	Read Only
6	CAR	Common Alarm	DIGITAL	R1000	DCS	BOOL	01	00006				OFF	ON	Read Only
7	LT2	Trip Light Output	DIGITAL	R1000	DCS	BOOL	01	00007				OFF	ON	Read Only
8	CTR	Common Trip	DIGITAL	R1000	DCS	BOOL	01	00008				OFF	ON	Read Only
9								00009						
10	SVF	Sound Vent Enclosure Fan	DIGITAL	R1000	DCS	BOOL	01	00010				OFF	ON	Read Only
11								00011						
12								00012						
13	MSP	Momentary Stop	DIGITAL	R1000	DCS	BOOL	01	00013				OFF	ON	Read Only
14	MST	Momentary Start	DIGITAL	R1000	DCS	BOOL	01	00014				OFF	ON	Read Only
15	OME	Oil Mist Eliminator	DIGITAL	R1000	DCS	BOOL	01	00015				OFF	ON	Read Only
16								00016						
17								00017						
18								00018						
19								00019						
20								00020						
21								00021						
22								00022						
23								00023						
24								00024						
25								00025						
26								00026						
27								00027						
28								00028						
29								00029						
30								00030						
31								00031						

R1000 - STANDARD MODBUS LIST

LN. ITM	TAG	DESCRIPTION	SIGNAL TYPE (ANALOG / DIGITAL)	SIGNAL FLOW		DATA FORMAT	MODBUS FUNCTION CODE	MODBUS ADDRESS	RANGE		UNIT	LOGIC STATE DEFINITION		REMARKS
				FROM	TO				LOW	HIGH		0	1	
1	M	Motor Feedback Status	DIGITAL	R1000	DCS	BOOL	02	10001				OFF	ON	Normally Open
2								10002						
3	ESTOP	Emergency Stop Pushbutton	DIGITAL	R1000	DCS	BOOL	02	10003				ON	OFF	Normally Closed
4	LOLS	Low Oil Reservoir Level	DIGITAL	R1000	DCS	BOOL	02	10004				OFF	ON	Normally Open
5	RST	Remote Start	DIGITAL	R1000	DCS	BOOL	02	10005				OFF	ON	Normally Open
6	RSP	Remote Stop	DIGITAL	R1000	DCS	BOOL	02	10006				ON	OFF	Normally Closed
7	RU	Remote Unload	DIGITAL	R1000	DCS	BOOL	02	10007				OFF	ON	Normally Open
8	DTP	Drain Trap Package	DIGITAL	R1000	DCS	BOOL	02	10008				OFF	ON	Normally Open
9	PMI	Permissive Start	DIGITAL	R1000	DCS	BOOL	02	10009				OFF	ON	Normally Open
10								10010						
11								10011						
12								10012						
13	AFDPS	Air Filter Differential Pressure Switch	DIGITAL	R1000	DCS	BOOL	02	10013				OFF	ON	Normally Open
14	OFDPS	Oil Filter Differential Pressure Switch	DIGITAL	R1000	DCS	BOOL	02	10014				OFF	ON	Normally Open
15	Reserved	Reserved						10015						
16								THRU						
17	Reserved	Reserved						10076						
18	IAT	Final Interstage Air Temperature	ANALOG	R1000	DCS	BOOL	02	10077				NRML	ALRM	Low Alarm
19	IAT	Final Interstage Air Temperature	ANALOG	R1000	DCS	BOOL	02	10078				NRML	ALRM	High Alarm
20	IAT	Final Interstage Air Temperature	ANALOG	R1000	DCS	BOOL	02	10079				NRML	FAIL	Transmitter Failure Alarm
21	IOT	Inlet Oil Temperature	ANALOG	R1000	DCS	BOOL	02	10080				NRML	ALRM	Low Alarm
22	IOT	Inlet Oil Temperature	ANALOG	R1000	DCS	BOOL	02	10081				NRML	ALRM	High Alarm
23	IOT	Inlet Oil Temperature	ANALOG	R1000	DCS	BOOL	02	10082				NRML	FAIL	Transmitter Failure Alarm
24	IMT	Inboard Motor Bearing Temperature	ANALOG	R1000	DCS	BOOL	02	10083				NRML	ALRM	Low Alarm
25	IMT	Inboard Motor Bearing Temperature	ANALOG	R1000	DCS	BOOL	02	10084				NRML	ALRM	High Alarm
26	IMT	Inboard Motor Bearing Temperature	ANALOG	R1000	DCS	BOOL	02	10085				NRML	FAIL	Transmitter Failure Alarm
27	OMT	Outboard Motor Bearing Temperature	ANALOG	R1000	DCS	BOOL	02	10086				NRML	ALRM	Low Alarm
28	OMT	Outboard Motor Bearing Temperature	ANALOG	R1000	DCS	BOOL	02	10087				NRML	ALRM	High Alarm
29	OMT	Outboard Motor Bearing Temperature	ANALOG	R1000	DCS	BOOL	02	10088				NRML	FAIL	Transmitter Failure Alarm
30	SMT	Motor Stator Temperature	ANALOG	R1000	DCS	BOOL	02	10089				NRML	ALRM	Low Alarm
31	SMT	Motor Stator Temperature	ANALOG	R1000	DCS	BOOL	02	10090				NRML	ALRM	High Alarm

R1000 - STANDARD MODBUS LIST

LN. ITM	TAG	DESCRIPTION	SIGNAL TYPE (ANALOG / DIGITAL)	SIGNAL FLOW		DATA FORMAT	MODBUS FUNCTION CODE	MODBUS ADDRESS	RANGE		UNIT	LOGIC STATE DEFINITION		REMARKS
				FROM	TO				LOW	HIGH		0	1	
32	SMT	Motor Stator Temperature	ANALOG	R1000	DCS	BOOL	02	10091				NRML	FAIL	Transmitter Failure Alarm
33	SMT2	Motor Stator Temperature	ANALOG	R1000	DCS	BOOL	02	10092				NRML	ALRM	Low Alarm
34	SMT2	Motor Stator Temperature	ANALOG	R1000	DCS	BOOL	02	10093				NRML	ALRM	High Alarm
35	SMT2	Motor Stator Temperature	ANALOG	R1000	DCS	BOOL	02	10094				NRML	FAIL	Transmitter Failure Alarm
36	SMT3	Motor Stator Temperature	ANALOG	R1000	DCS	BOOL	02	10095				NRML	ALRM	Low Alarm
37	SMT3	Motor Stator Temperature	ANALOG	R1000	DCS	BOOL	02	10096				NRML	ALRM	High Alarm
38	SMT3	Motor Stator Temperature	ANALOG	R1000	DCS	BOOL	02	10097				NRML	FAIL	Transmitter Failure Alarm
39	FIT	First Interstage Air Temperature	ANALOG	R1000	DCS	BOOL	02	10098				NRML	ALRM	Low Alarm
40	FIT	First Interstage Air Temperature	ANALOG	R1000	DCS	BOOL	02	10099				NRML	ALRM	High Alarm
41	FIT	First Interstage Air Temperature	ANALOG	R1000	DCS	BOOL	02	10100				NRML	FAIL	Transmitter Failure Alarm
42	ACT	Aftercooler Temperature	ANALOG	R1000	DCS	BOOL	02	10101				NRML	ALRM	Low Alarm
43	ACT	Aftercooler Temperature	ANALOG	R1000	DCS	BOOL	02	10102				NRML	ALRM	High Alarm
44	ACT	Aftercooler Temperature	ANALOG	R1000	DCS	BOOL	02	10103				NRML	FAIL	Transmitter Failure Alarm
45	ATT	Inlet Air Temperature	ANALOG	R1000	DCS	BOOL	02	10104				NRML	ALRM	Low Alarm
46	ATT	Inlet Air Temperature	ANALOG	R1000	DCS	BOOL	02	10105				NRML	ALRM	High Alarm
47	ATT	Inlet Air Temperature	ANALOG	R1000	DCS	BOOL	02	10106				NRML	FAIL	Transmitter Failure Alarm
48	Reserved	Reserved						10107						
49								THRU						
50	Reserved	Reserved						10184						
51	DPT	Final Stage Discharge Pressure	ANALOG	R1000	DCS	BOOL	02	10185				NRML	ALRM	Low Alarm
52	DPT	Final Stage Discharge Pressure	ANALOG	R1000	DCS	BOOL	02	10186				NRML	ALRM	High Alarm
53	DPT	Final Stage Discharge Pressure	ANALOG	R1000	DCS	BOOL	02	10187				NRML	FAIL	Transmitter Failure Alarm
54	SPT	System Air Pressure	ANALOG	R1000	DCS	BOOL	02	10188				NRML	ALRM	Low Alarm
55	SPT	System Air Pressure	ANALOG	R1000	DCS	BOOL	02	10189				NRML	ALRM	High Alarm
56	SPT	System Air Pressure	ANALOG	R1000	DCS	BOOL	02	10190				NRML	FAIL	Transmitter Failure Alarm
57	OPT	Inlet Oil Pressure	ANALOG	R1000	DCS	BOOL	02	10191				NRML	ALRM	Low Alarm
58	OPT	Inlet Oil Pressure	ANALOG	R1000	DCS	BOOL	02	10192				NRML	ALRM	High Alarm
59	OPT	Inlet Oil Pressure	ANALOG	R1000	DCS	BOOL	02	10193				NRML	FAIL	Transmitter Failure Alarm
60	MAT	Motor Amps Transmitter	ANALOG	R1000	DCS	BOOL	02	10194				NRML	ALRM	Low Alarm
61	MAT	Motor Amps Transmitter	ANALOG	R1000	DCS	BOOL	02	10195				NRML	ALRM	High Alarm
62	MAT	Motor Amps Transmitter	ANALOG	R1000	DCS	BOOL	02	10196				NRML	FAIL	Transmitter Failure Alarm

R1000 - STANDARD MODBUS LIST

LN. ITM	TAG	DESCRIPTION	SIGNAL TYPE (ANALOG / DIGITAL)	SIGNAL FLOW		DATA FORMAT	MODBUS FUNCTION CODE	MODBUS ADDRESS	RANGE		UNIT	LOGIC STATE DEFINITION		REMARKS
				FROM	TO				LOW	HIGH		0	1	
63	LVT	Low Speed Pinion Vibration -X	ANALOG	R1000	DCS	BOOL	02	10197				NRML	ALRM	Low Alarm
64	LVT	Low Speed Pinion Vibration -X	ANALOG	R1000	DCS	BOOL	02	10198				NRML	ALRM	High Alarm
65	LVT	Low Speed Pinion Vibration -X	ANALOG	R1000	DCS	BOOL	02	10199				NRML	FAIL	Transmitter Failure Alarm
66	HVT	High Speed Pinion Vibration -X	ANALOG	R1000	DCS	BOOL	02	10200				NRML	ALRM	Low Alarm
67	HVT	High Speed Pinion Vibration -X	ANALOG	R1000	DCS	BOOL	02	10201				NRML	ALRM	High Alarm
68	HVT	High Speed Pinion Vibration -X	ANALOG	R1000	DCS	BOOL	02	10202				NRML	FAIL	Transmitter Failure Alarm
69	Reserved	Reserved						10203						
70								THRU						
71	Reserved	Reserved						10208						
72	FDT	First Stage Discharge Pressure	ANALOG	R1000	DCS	BOOL	02	10209				NRML	ALRM	Low Alarm
73	FDT	First Stage Discharge Pressure	ANALOG	R1000	DCS	BOOL	02	10210				NRML	ALRM	High Alarm
74	FDT	First Stage Discharge Pressure	ANALOG	R1000	DCS	BOOL	02	10211				NRML	FAIL	Transmitter Failure Alarm
75	SDT	Second Stage Discharge Pressure	ANALOG	R1000	DCS	BOOL	02	10212				NRML	ALRM	Low Alarm
76	SDT	Second Stage Discharge Pressure	ANALOG	R1000	DCS	BOOL	02	10213				NRML	ALRM	High Alarm
77	SDT	Second Stage Discharge Pressure	ANALOG	R1000	DCS	BOOL	02	10214				NRML	FAIL	Transmitter Failure Alarm
78								10215						
79								10216						
80								10217						
81	HVT -2	High Speed Pinion Vibration -2	ANALOG	R1000	DCS	BOOL	02	10218				NRML	ALRM	Low Alarm
82	HVT -2	High Speed Pinion Vibration -2	ANALOG	R1000	DCS	BOOL	02	10219				NRML	ALRM	High Alarm
83	HVT -2	High Speed Pinion Vibration -2	ANALOG	R1000	DCS	BOOL	02	10220				NRML	FAIL	Transmitter Failure Alarm
84	Reserved	Reserved						10221						
85								THRU						
86	Reserved	Reserved						10238						
87	LVT -Y	Low Speed Pinion Vibration -Y	ANALOG	R1000	DCS	BOOL	02	10239				NRML	ALRM	Low Alarm
88	LVT -Y	Low Speed Pinion Vibration -Y	ANALOG	R1000	DCS	BOOL	02	10240				NRML	ALRM	High Alarm
89	LVT -Y	Low Speed Pinion Vibration -Y	ANALOG	R1000	DCS	BOOL	02	10241				NRML	FAIL	Transmitter Failure Alarm
90	HVT -Y	High Speed Pinion Vibration -Y	ANALOG	R1000	DCS	BOOL	02	10242				NRML	ALRM	Low Alarm
91	HVT -Y	High Speed Pinion Vibration -Y	ANALOG	R1000	DCS	BOOL	02	10243				NRML	ALRM	High Alarm
92	HVT -Y	High Speed Pinion Vibration -Y	ANALOG	R1000	DCS	BOOL	02	10244				NRML	FAIL	Transmitter Failure Alarm
93	Reserved	Reserved						10245						

R1000 - STANDARD MODBUS LIST

LN. ITM	TAG	DESCRIPTION	SIGNAL TYPE (ANALOG / DIGITAL)	SIGNAL FLOW		DATA FORMAT	MODBUS FUNCTION CODE	MODBUS ADDRESS	RANGE		UNIT	LOGIC STATE DEFINITION		REMARKS
				FROM	TO				LOW	HIGH		0	1	
94								THRU						
95	Reserved	Reserved						10253						
96	SAPT	Seal Air Pressure Transmitter	ANALOG	R1000	DCS	BOOL	02	10254				NRML	ALRM	Low Alarm
97	SAPT	Seal Air Pressure Transmitter	ANALOG	R1000	DCS	BOOL	02	10255				NRML	ALRM	High Alarm
98	SAPT	Seal Air Pressure Transmitter	ANALOG	R1000	DCS	BOOL	02	10256				NRML	FAIL	Transmitter Failure Alarm
99	Reserved	Reserved						10257						
100								THRU						
101	Reserved	Reserved						10524						
102	IAT	Final Interstage Air Temperature	ANALOG	R1000	DCS	BOOL	02	10525				NRML	TRIP	Low Trip
103	IAT	Final Interstage Air Temperature	ANALOG	R1000	DCS	BOOL	02	10526				NRML	TRIP	High Trip
104	IAT	Final Interstage Air Temperature	ANALOG	R1000	DCS	BOOL	02	10527				NRML	FAIL	Transmitter Failure Trip
105	IOT	Inlet Oil Temperature	ANALOG	R1000	DCS	BOOL	02	10528				NRML	TRIP	Low Trip
106	IOT	Inlet Oil Temperature	ANALOG	R1000	DCS	BOOL	02	10529				NRML	TRIP	High Trip
107	IOT	Inlet Oil Temperature	ANALOG	R1000	DCS	BOOL	02	10530				NRML	FAIL	Transmitter Failure Trip
108	IMT	Inboard Motor Bearing Temperature	ANALOG	R1000	DCS	BOOL	02	10531				NRML	TRIP	Low Trip
109	IMT	Inboard Motor Bearing Temperature	ANALOG	R1000	DCS	BOOL	02	10532				NRML	TRIP	High Trip
110	IMT	Inboard Motor Bearing Temperature	ANALOG	R1000	DCS	BOOL	02	10533				NRML	FAIL	Transmitter Failure Trip
111	OMT	Outboard Motor Bearing Temperature	ANALOG	R1000	DCS	BOOL	02	10534				NRML	TRIP	Low Trip
112	OMT	Outboard Motor Bearing Temperature	ANALOG	R1000	DCS	BOOL	02	10535				NRML	TRIP	High Trip
113	OMT	Outboard Motor Bearing Temperature	ANALOG	R1000	DCS	BOOL	02	10536				NRML	FAIL	Transmitter Failure Trip
114	SMT	Motor Stator Temperature	ANALOG	R1000	DCS	BOOL	02	10537				NRML	TRIP	Low Trip
115	SMT	Motor Stator Temperature	ANALOG	R1000	DCS	BOOL	02	10538				NRML	TRIP	High Trip
116	SMT	Motor Stator Temperature	ANALOG	R1000	DCS	BOOL	02	10539				NRML	FAIL	Transmitter Failure Trip
117	SMT2	Motor Stator Temperature	ANALOG	R1000	DCS	BOOL	02	10540				NRML	TRIP	Low Trip
118	SMT2	Motor Stator Temperature	ANALOG	R1000	DCS	BOOL	02	10541				NRML	TRIP	High Trip
119	SMT2	Motor Stator Temperature	ANALOG	R1000	DCS	BOOL	02	10542				NRML	FAIL	Transmitter Failure Trip
120	SMT3	Motor Stator Temperature	ANALOG	R1000	DCS	BOOL	02	10543				NRML	TRIP	Low Trip
121	SMT3	Motor Stator Temperature	ANALOG	R1000	DCS	BOOL	02	10544				NRML	TRIP	High Trip
122	SMT3	Motor Stator Temperature	ANALOG	R1000	DCS	BOOL	02	10545				NRML	FAIL	Transmitter Failure Trip
123	FIT	First Interstage Air Temperature	ANALOG	R1000	DCS	BOOL	02	10546				NRML	TRIP	Low Trip
124	FIT	First Interstage Air Temperature	ANALOG	R1000	DCS	BOOL	02	10547				NRML	TRIP	High Trip

R1000 - STANDARD MODBUS LIST

LN. ITM	TAG	DESCRIPTION	SIGNAL TYPE (ANALOG / DIGITAL)	SIGNAL FLOW		DATA FORMAT	MODBUS FUNCTION CODE	MODBUS ADDRESS	RANGE		UNIT	LOGIC STATE DEFINITION		REMARKS
				FROM	TO				LOW	HIGH		0	1	
125	FIT	First Interstage Air Temperature	ANALOG	R1000	DCS	BOOL	02	10548				NRML	FAIL	Transmitter Failure Trip
126	ACT	Aftercooler Temperature	ANALOG	R1000	DCS	BOOL	02	10549				NRML	TRIP	Low Trip
127	ACT	Aftercooler Temperature	ANALOG	R1000	DCS	BOOL	02	10550				NRML	TRIP	High Trip
128	ACT	Aftercooler Temperature	ANALOG	R1000	DCS	BOOL	02	10551				NRML	FAIL	Transmitter Failure Trip
129	ATT	Inlet Air Temperature	ANALOG	R1000	DCS	BOOL	02	10552				NRML	TRIP	Low Trip
130	ATT	Inlet Air Temperature	ANALOG	R1000	DCS	BOOL	02	10553				NRML	TRIP	High Trip
131	ATT	Inlet Air Temperature	ANALOG	R1000	DCS	BOOL	02	10554				NRML	FAIL	Transmitter Failure Trip
132	Reserved	Reserved						10555						
133								THRU						
134	Reserved	Reserved						10632						
135	DPT	Discharge Air Pressure	ANALOG	R1000	DCS	BOOL	02	10633				NRML	TRIP	Low Trip
136	DPT	Discharge Air Pressure	ANALOG	R1000	DCS	BOOL	02	10634				NRML	TRIP	High Trip
137	DPT	Discharge Air Pressure	ANALOG	R1000	DCS	BOOL	02	10635				NRML	FAIL	Transmitter Failure Trip
138	SPT	System Air Pressure	ANALOG	R1000	DCS	BOOL	02	10636				NRML	TRIP	Low Trip
139	SPT	System Air Pressure	ANALOG	R1000	DCS	BOOL	02	10637				NRML	TRIP	High Trip
140	SPT	System Air Pressure	ANALOG	R1000	DCS	BOOL	02	10638				NRML	FAIL	Transmitter Failure Trip
141	OPT	Inlet Oil Pressure	ANALOG	R1000	DCS	BOOL	02	10639				NRML	TRIP	Low Trip
142	OPT	Inlet Oil Pressure	ANALOG	R1000	DCS	BOOL	02	10640				NRML	TRIP	High Trip
143	OPT	Inlet Oil Pressure	ANALOG	R1000	DCS	BOOL	02	10641				NRML	FAIL	Transmitter Failure Trip
144	MAT	Motor Amps Transmitter	ANALOG	R1000	DCS	BOOL	02	10642				NRML	TRIP	Low Trip
145	MAT	Motor Amps Transmitter	ANALOG	R1000	DCS	BOOL	02	10643				NRML	TRIP	High Trip
146	MAT	Motor Amps Transmitter	ANALOG	R1000	DCS	BOOL	02	10644				NRML	FAIL	Transmitter Failure Trip
147	LVT	Low Speed Pinion Vibration -X	ANALOG	R1000	DCS	BOOL	02	10645				NRML	TRIP	Low Trip
148	LVT	Low Speed Pinion Vibration -X	ANALOG	R1000	DCS	BOOL	02	10646				NRML	TRIP	High Trip
149	LVT	Low Speed Pinion Vibration -X	ANALOG	R1000	DCS	BOOL	02	10647				NRML	FAIL	Transmitter Failure Trip
150	HVT	High Speed Pinion Vibration -X	ANALOG	R1000	DCS	BOOL	02	10648				NRML	TRIP	Low Trip
151	HVT	High Speed Pinion Vibration -X	ANALOG	R1000	DCS	BOOL	02	10649				NRML	TRIP	High Trip
152	HVT	High Speed Pinion Vibration -X	ANALOG	R1000	DCS	BOOL	02	10650				NRML	FAIL	Transmitter Failure Trip
153	Reserved	Reserved						10651						
154								THRU						
155	Reserved	Reserved						10656						

R1000 - STANDARD MODBUS LIST

LN. ITM	TAG	DESCRIPTION	SIGNAL TYPE (ANALOG / DIGITAL)	SIGNAL FLOW		DATA FORMAT	MODBUS FUNCTION CODE	MODBUS ADDRESS	RANGE		UNIT	LOGIC STATE DEFINITION		REMARKS
				FROM	TO				LOW	HIGH		0	1	
156	FDT	First Stage Discharge Pressure	ANALOG	R1000	DCS	BOOL	02	10657				NRML	TRIP	Low Trip
157	FDT	First Stage Discharge Pressure	ANALOG	R1000	DCS	BOOL	02	10658				NRML	TRIP	High Trip
158	FDT	First Stage Discharge Pressure	ANALOG	R1000	DCS	BOOL	02	10659				NRML	FAIL	Transmitter Failure Trip
159	SDT	Second Stage Discharge Pressure	ANALOG	R1000	DCS	BOOL	02	10660				NRML	TRIP	Low Trip
160	SDT	Second Stage Discharge Pressure	ANALOG	R1000	DCS	BOOL	02	10661				NRML	TRIP	High Trip
161	SDT	Second Stage Discharge Pressure	ANALOG	R1000	DCS	BOOL	02	10662				NRML	FAIL	Transmitter Failure Trip
162	Reserved	Reserved						10663						
163								THRU						
164	Reserved	Reserved						10665						
165	HVT -2	High Speed Pinion Vibration -2	ANALOG	R1000	DCS	BOOL	02	10666				NRML	TRIP	Low Trip
166	HVT -2	High Speed Pinion Vibration -2	ANALOG	R1000	DCS	BOOL	02	10667				NRML	TRIP	High Trip
167	HVT -2	High Speed Pinion Vibration -2	ANALOG	R1000	DCS	BOOL	02	10668				NRML	FAIL	Transmitter Failure Trip
168	Reserved	Reserved						10669						
169								THRU						
170	Reserved	Reserved						10686						
171	LVT -Y	Low Speed Pinion Vibration -Y	ANALOG	R1000	DCS	BOOL	02	10687				NRML	TRIP	Low Trip
172	LVT -Y	Low Speed Pinion Vibration -Y	ANALOG	R1000	DCS	BOOL	02	10688				NRML	TRIP	High Trip
173	LVT -Y	Low Speed Pinion Vibration -Y	ANALOG	R1000	DCS	BOOL	02	10689				NRML	FAIL	Transmitter Failure Trip
174	HVT -Y	High Speed Pinion Vibration -Y	ANALOG	R1000	DCS	BOOL	02	10690				NRML	TRIP	Low Trip
175	HVT -Y	High Speed Pinion Vibration -Y	ANALOG	R1000	DCS	BOOL	02	10691				NRML	TRIP	High Trip
176	HVT -Y	High Speed Pinion Vibration -Y	ANALOG	R1000	DCS	BOOL	02	10692				NRML	FAIL	Transmitter Failure Trip
177	Reserved	Reserved						10693						
178								THRU						
179	Reserved	Reserved						10701						
180	SAPT	Seal Air Pressure Transmitter	ANALOG	R1000	DCS	BOOL	02	10702				NRML	TRIP	Low Trip
181	SAPT	Seal Air Pressure Transmitter	ANALOG	R1000	DCS	BOOL	02	10703				NRML	TRIP	High Trip
182	SAPT	Seal Air Pressure Transmitter	ANALOG	R1000	DCS	BOOL	02	10704				NRML	FAIL	Transmitter Failure Trip
183														
184														
185														
186														

MODBUS MAP

R1000 - STANDARD MODBUS LIST

LN. ITM	TAG	DESCRIPTION	SIGNAL TYPE (ANALOG / DIGITAL)	SIGNAL FLOW		DATA FORMAT	MODBUS FUNCTION CODE	MODBUS ADDRESS	R1000 RANGE		UNIT	MODBUS OUTPUT SCALING FACTOR	REMARKS
				FROM	TO				LOW	HIGH			
1	IAT	Final Interstage Air Temperature	ANALOG	R1000	DCS	FLT. PNT	04	30001	-58	302	°F	x100	
2	IOT	Inlet Oil Temperature	ANALOG	R1000	DCS	FLT. PNT	04	30002	-58	302	°F	x100	
3	IMT	Inboard Motor Bearing Temperature	ANALOG	R1000	DCS	FLT. PNT	04	30003	-40	400	°F	x100	
4	OMT	Outboard Motor Bearing Temperature	ANALOG	R1000	DCS	FLT. PNT	04	30004	-40	400	°F	x100	
5	SMT	Motor Stator Temperature	ANALOG	R1000	DCS	FLT. PNT	04	30005	-40	400	°F	x100	
6	SMT2	Motor Stator Temperature	ANALOG	R1000	DCS	FLT. PNT	04	30006	-40	400	°F	x100	
7	SMT3	Motor Stator Temperature	ANALOG	R1000	DCS	FLT. PNT	04	30007	-40	400	°F	x100	
8	FIT	First Interstage Air Temperature	ANALOG	R1000	DCS	FLT. PNT	04	30008	-58	302	°F	x100	
9	ACT	Aftercooler Temperature	ANALOG	R1000	DCS	FLT. PNT	04	30009	-40	400	°F	x100	
10	ATT	Inlet Air Temperature	ANALOG	R1000	DCS	FLT. PNT	04	30010	-58	302	°F	x100	
11								30011					
12								30012					
13								30013					
14								30014					
15								30015					
16								30016					
17								30017					
18								30018					
19								30019					
20								30020					
21								30021					
22								30022					
23								30023					
24								30024					
25								30025					
26								30026					
27								30027					
28								30028					
29								30029					
30								30030					

R1000 - STANDARD MODBUS LIST

LN. ITM	TAG	DESCRIPTION	SIGNAL TYPE (ANALOG / DIGITAL)	SIGNAL FLOW		DATA FORMAT	MODBUS FUNCTION CODE	MODBUS ADDRESS	R1000 RANGE		UNIT	MODBUS OUTPUT SCALING FACTOR	REMARKS
				FROM	TO				LOW	HIGH			
31	DPT	Discharge Air Pressure	ANALOG	R1000	DCS	FLT. PNT	04	30031	0	200	PSIG	x100	
32	SPT	System Air Pressure	ANALOG	R1000	DCS	FLT. PNT	04	30032	0	200	PSIG	x100	
33	OPT	Inlet Oil Pressure	ANALOG	R1000	DCS	FLT. PNT	04	30033	0	100	PSIG	x100	
34	MAT	Motor Amps Transmitter	ANALOG	R1000	DCS	FLT. PNT	04	30034	TBD	TBD	AMPs	x100	MAT dependent on motor
35	LVT	Low Speed Pinion Vibration -X	ANALOG	R1000	DCS	FLT. PNT	04	30035	0	4	mils	x100	
36	HVT	High Speed Pinion Vibration -X	ANALOG	R1000	DCS	FLT. PNT	04	30036	0	4	mils	x100	
37								30037					
38								30038					
39	FDT	First Stage Discharge Pressure	ANALOG	R1000	DCS	FLT. PNT	04	30039	0	200	PSIG	x100	
40	SDT	Second Stage Discharge Pressure	ANALOG	R1000	DCS	FLT. PNT	04	30040	0	200	PSIG	x100	
41								30041					
42	HVT -2	High Speed Pinion Vibration -2	ANALOG	R1000	DCS	FLT. PNT	04	30042	0	4	mils	x100	
43								30043					
44								30044					
45								30045					
46								30046					
47								30047					
48								30048					
49								30049					
50								30050					
51								30051					
52								30052					
53								30053					
54	SAPT	Seal Air Pressure Transmitter	ANALOG	R1000	DCS	FLT. PNT	04	30054	0	15	PSIG	x100	
55	Reserved	Reserved						30055					
55								THRU					
56	Reserved	Reserved						30094					
57	IVT	Inlet Valve	ANALOG	R1000	DCS	FLT. PNT	04	30095	0	100	%	x100	Controller Output, % Open
58	UVT	Unloading Valve	ANALOG	R1000	DCS	FLT. PNT	04	30096	0	100	%	x100	Controller Output, % Closed
59													

INTRODUCTION

This chapter is intended for use by operators to help define the possible causes of a problem. Contact FS-Elliott for an authorized distributor for repairs.

CAUTION

Replacement parts should be purchased from FS-Elliott. Many of the vendor parts have been modified and/or calibrated by FS-Elliott for compatibility with the design. Parts that are purchased directly from vendors may not function properly and could damage other components.

For applicable parts, in addition to Table 7-1 Troubleshooting guidelines, refer to the vendor's instruction manual located in the Accessories, Chapter 8 of this technical manual.

TABLE 7-1

TROUBLESHOOTING GUIDE

1.	TROUBLE:	Air compressor unit fails to start.
	CAUSE:	Remote stop contact is not closed.
	ACTION:	Close the remote stop contact and re-start.
	INVESTIGATE:	Check to see if circuit breaker is open.
	ACTION:	Determine cause and reset breaker.
	CAUSE:	Improper setpoints.
	ACTION:	Check setpoints and correct (or restore "R1000") as required.
	CAUSE:	Defective relay (CR1)
	ACTION:	Lock out main motor or turbine to prevent from starting and replace defective relay (CR1) and restart unit.
	INVESTIGATE:	Check E-stop switch.
	ACTION:	Replace defection E-stop switch and restart unit.
	INVESTIGATE:	Check operator interface for trip condition.
	ACTION:	Access trip history.
	CAUSE:	Compressor trip condition exists.
	ACTION:	Check the operator interface screen for cause of trip condition. Rectify trip condition.
	INVESTIGATE:	Check CPU for system fault (not applicable to R1000 control system).
	ACTION:	Contact your local authorized FS-Elliott distributor for assistance.

TABLE 7-1

TROUBLESHOOTING GUIDE

---

1. TROUBLE: Air compressor unit fails to start. (Continued)

CAUSE:	Drive motor overloads tripped.
ACTION:	(Refer to Item 5).
INVESTIGATE:	Inspect wiring between panel and starter.
ACTION:	Repair wiring and restart unit.
INVESTIGATE:	Inspect control panel for failed component.
ACTION:	Replace component and restart the unit.
INVESTIGATE:	Inspect starter for malfunction.
ACTION:	Reset, repair or replace component and restart the unit.
INVESTIGATE:	Inspect driver for malfunction.
ACTION:	Check the operator interface screen for cause of trip condition. Investigate panel and contact FS-Elliott Service office.

---

2. TROUBLE: Operator interface display is blank.

CAUSE:	No power to panel.
ACTION:	Apply power to panel.
CAUSE:	Circuit breaker tripped in DMC.
ACTION:	Determine cause and reset circuit breaker.
CAUSE:	Loose connection between operator Interface and power supply (or I/O Module for the R1000 control panel).
ACTION:	Reconnect or replace cable.
INVESTIGATE:	Green light not illuminated on Power Supply module in panel (not applicable to the R1000 control panel).
ACTION:	Check power to DC power supply. Check DC output voltage. Replace DC power supply, if necessary. Investigate panel and contact FS-Elliott.
CAUSE:	Defective operator interface.
ACTION:	Replace operator interface. Contact FS-Elliott for authorized distributor.

TABLE 7-1

TROUBLESHOOTING GUIDE

3. TROUBLE: Compressor surge.

CAUSE: Actual inlet air temperature is higher than design.
ACTION: Adjust control system to compensate for abnormally high ambient temperatures. Contact your local authorized FS-Elliott distributor for assistance.

CAUSE: Inlet control valve/guide vanes or unloading control valve is in manual control.
ACTION: Check control mode of valves and change to auto.

CAUSE: Dirty inlet air filter.
ACTION: Clean or replace filter elements.

CAUSE: Obstruction in air system (rags in inlet pipe, etc).
ACTION: Remove any obstructions from Plant Air System.

CAUSE: Improper minimum motor current setpoint (minimum inlet density setpoint).
ACTION: Raise setpoint to design value.

CAUSE: Compressor has high interstage air temperatures.
ACTION: Open water valves to cool the interstage air temperatures or check that the interstage temperature water control valves are "max" open on an automatic system. Check water temperatures and flow. Clean intercooler tube bundles, if necessary.

CAUSE: Defective discharge pressure transmitter.
ACTION: Replace transmitter.

CAUSE: Defective analog input module or channel.
ACTION: Verify that the (SF) System Fault is not illuminated. Replace analog input module, if necessary.

CAUSE: Unloading valve will not open.
ACTION: Refer to Item 14 - Trouble.

CAUSE: Inlet valve will not open.
ACTION: Refer to Item 13 - Trouble.

CAUSE: Dirt build-up on impellers, diffusers or backplates.
ACTION: Clean impellers, diffusers and/or backplates.

CAUSE: Damaged or worn impellers or diffusers.
ACTION: Replace damaged or worn parts.

TABLE 7-1

TROUBLESHOOTING GUIDE

---

3. TROUBLE: Compressor surge. (Continued)

CAUSE: Compressor is not running at design speed.
ACTION: Contact FS-Elliott for authorized distributor.

CAUSE: Turbine speed decreased.
ACTION: Check steam conditions.

---

4. TROUBLE: Compressor fails to develop design pressure.

CAUSE: Compressor is unloaded while operating in a running state.
ACTION: Ensure unloaded condition is not by design (i.e., operating mode selected). Ensure control valves are in automatic control.

CAUSE: Excessive system demand.
ACTION: Start another air compressor.

CAUSE: Discharge pressure setpoint is too low.
ACTION: Adjust discharge pressure setpoint to design value. For R1000 control system, review surge line calculation screen if operating in pressure band optimization (PBO) control mode.

CAUSE: Unloading control valve is in manual control.
ACTION: Check control mode of valve and change to auto.

CAUSE: Defective discharge pressure transmitter.
ACTION: Replace transmitter.

CAUSE: Defective analog input module.
ACTION: Verify that the System Fault Indicator is not illuminated. Replace analog input module, if necessary.

INVESTIGATE: Test unloading valve function.
ACTION: If valve does not open, refer to Item 14.

TABLE 7-1

TROUBLESHOOTING GUIDE

---

5. TROUBLE: Main motor overloads trip and/or increased power usage (excess steam consumption if turbine driven).

CAUSE: Motor Current setpoint (inlet air density) is too high.
ACTION: Adjust setpoint to design value.

CAUSE: Inlet valve/guide vanes are in manual control.
ACTION: Check control mode of valve and change to auto.

CAUSE: Motor starter setpoints are improperly set.
ACTION: Determine proper setpoints and adjust accordingly. Investigate panel and contact FS-Elliott.

INVESTIGATE: Test Inlet valve/guide vanes.
ACTION: If not open, refer to Item 13 - Trouble.

---

6. TROUBLE: Controls do not detect surge or false surge occurrences.

CAUSE: A false surge occurs.
ACTION: A sudden drop in pressure or fluctuating DPT reading can trigger a false surge.

CAUSE: Setpoints are incorrect.
ACTION: Change setpoints. Investigate panel and contact FS-Elliott.

CAUSE: Improperly adjusted surge time (DT) or surge differential (DP).
ACTION: Adjust setpoints to default value of 5psi over 0.3 seconds.

CAUSE: Defective discharge pressure transmitter.
ACTION: Replace transmitter.

TABLE 7-1

TROUBLESHOOTING GUIDE

7. TROUBLE: Excessive vibration.

INVESTIGATE: Inspect vibration monitoring system.
ACTION: Adjust or replace monitoring system, as require.

CAUSE: Water in air stream.
ACTION:
1. Clean drain valve orifices, if plugged.
2. Inspect intercooler tube bundles and repair or replace, if necessary.

INVESTIGATE: Inspect coupling.
ACTION: Lubricate coupling according to manufacturer's instructions.

CAUSE: Coupling misalignment.
ACTION: Align coupling.

CAUSE: Worn coupling.
ACTION: Replace coupling.

CAUSE: Loose or broken hold down bolts.
ACTION: Tighten or replace bolts.

INVESTIGATE: Inspect impellers for dirt build up.
ACTION: Clean impellers.

INVESTIGATE: Inspect Impellers/casing for rubbing.
ACTION: Determine and correct cause of rub; replace with new balanced rotor assembly.

CAUSE: Rotor unbalance.
ACTION: Re-balance rotor assembly or send to factory for balance.

CAUSE: Seal rub or damaged carbon seals.
ACTION: Inspect and repair carbon seals. Install properly.

INVESTIGATE: Inspect pinions/bull gear for tooth damage.
ACTION: Replace gearing, as required.

INVESTIGATE: Inspect installation for piping strain.
ACTION: Install pipe supports, spring hangers and/or expansion joints where necessary to relieve induced vibrations.

INVESTIGATE: Inspect facility for external vibrations transmitting to compressor.
ACTION: Consult vibration specialist.

TABLE 7-1

TROUBLESHOOTING GUIDE

---

8. TROUBLE: Excessive air blowing from seal air blow-off regulator.

CAUSE: Excessive seal air blowing from regulator.
ACTION: Replace carbon seals if greater than 20 psig.

INVESTIGATE: Check seal on air regulator
ACTION: Repair or replace.

---

9. TROUBLE: Auxiliary oil pump (AOP) driver fails to start.

CAUSE: Auxiliary oil pump motor fails to start.
ACTION: Determine reason for overload condition and reset overloads.

INVESTIGATE: Check relay (CR2).
ACTION: Test relay. Replace if necessary.

CAUSE: Defective output channel or I/O module (R1000 control system).
ACTION: Replace CPU.

CAUSE: Oil pressure transmitter is defective.
ACTION: Repair or replace.

CAUSE: Defective motor.
ACTION: Repair or replace motor.

---

10. TROUBLE: Auxiliary oil pump driver fails to shut down.

CAUSE: Defective CR2, CPU module, or output channel.
ACTION: Investigate panel and contact FS-Elliott Service office. Test CR2 and replace CPU or I/O module (R1000 control system).

CAUSE: Oil system relief valve in open position.
ACTION: Adjust, repair or replace oil system relief valve.

CAUSE: Defective oil pressure transmitter.
ACTION: Repair or replace.

CAUSE: Defective main oil pump.
ACTION: Repair or replace.

TABLE 7-1

TROUBLESHOOTING GUIDE

---

11. TROUBLE: High lube oil temperature.

CAUSE: Oil cooler water flow control valves improperly adjusted.
ACTION: Adjust cooling water flow control valves.

CAUSE: Cooling water temperature above design.
ACTION: Reduce cooling water temperature.

CAUSE: Defective oil temperature RTD/Transmitter.
ACTION: Replace RTD/Transmitter.

CAUSE: Defective Analog Input Module (AIO) or I/O channel (R1000).
ACTION: Replace (AIO) Module. Investigate panel and contact FS-Elliott.

CAUSE: Dirty oil cooler.
ACTION: Clean oil cooler.

---

12. TROUBLE: Low lube oil pressure.

CAUSE: Defective main and/or auxiliary oil pumps
ACTION: Repair or replace pump(s).

CAUSE: Defective or improperly adjusted pump relief valve.
ACTION: Adjust, repair or replace pump relief valve.

CAUSE: Obstructed oil pump suction line.
ACTION: Remove obstruction.

CAUSE: Air leak in oil pump suction line.
ACTION: Repair leak and prime oil pump.

CAUSE: Dirty oil filter cartridge.
ACTION: Replace filter cartridge.

CAUSE: Defective oil pressure transmitter.
ACTION: Replace oil pressure transmitter.

CAUSE: Defective channel on CPU module or I/O Module (R1000).
ACTION: Replace CPU or I/O Module (R1000). Investigate panel and contact FS-Elliott office.

CAUSE: Low lube oil pressure.
ACTION: Repair leaks and refill oil reservoir.

TABLE 7-1

TROUBLESHOOTING GUIDE

---

12. TROUBLE: Low lube oil pressure. (Continued)

WARNING

Disconnect power to the oil heater before filling the oil reservoir with oil. Failure to do so may result in serious or fatal personal injury and/or damage to compressor components.

---

13. TROUBLE: Inlet valve/inlet guide vane fails to operate or operates erratically.

CAUSE: Leak or obstruction in air line to inlet valve actuator.
ACTION: Remove obstruction or repair leaky connections.

CAUSE: Defective inlet valve actuator.
ACTION: Repair or replace valve actuator.

CAUSE: Inlet valve positioning linkage binding.
ACTION: Repair or replace linkage.

CAUSE: Defective inlet valve I/P transducer.
ACTION: Recalibrate or replace.

CAUSE: Defective or improperly adjusted current transmitter.
ACTION: Recalibrate or replace.

CAUSE: Improper proportional band or reset setpoints.
ACTION: Change setpoints.

CAUSE: Inlet valve is not in the desired control mode.
ACTION: Place inlet valve in desired mode.

CAUSE: Defective CPU or output channel (R1000).
ACTION: Investigate panel and contact FS-Elliott. Replace CPU or I/O module (R1000).

CAUSE: Pneumatic air line to inlet valve/guide vanes is too small.
ACTION: Increase line size to 3/8" OD copper tubing or greater.

CAUSE: Air leaks or moisture in air.
ACTION: Contact FS-Elliott for authorized distributor.

TABLE 7-1

TROUBLESHOOTING GUIDE

---

14. TROUBLE: Unloading valve fails to operate or operates erratically.

CAUSE: Leak or obstruction in air line to unloading valve actuator.
ACTION: Repair air line; remove obstruction.

CAUSE: Defective unloading valve actuator.
ACTION: Repair or replace valve actuator.

CAUSE: Unloading valve positioner linkage binding.
ACTION: Repair or replace linkage.

CAUSE: Low air supply pressure.
ACTION: Increase air supply pressure.

CAUSE: Defective unloading valve I/P transmitter.
ACTION: Recalibrate or replace.

CAUSE: Improper proportional band or reset setpoints.
ACTION: Change setpoints.

CAUSE: Unloading valve is not in the desired control mode.
ACTION: Place valve in desired mode.

CAUSE: Defective CPU or output channel (R1000).
ACTION: Investigate panel and contact FS-Elliott. Replace CPU or I/O module (R1000).

CAUSE: Pneumatic air line to unloading valve is too small.
ACTION: Increase line size to 3/8" OD copper tubing or greater.

CAUSE: Air leaks or moisture in air.
ACTION: Contact FS-Elliott for authorized distributor.

CAUSE: Defective or improperly adjusted discharge pressure transmitter.
ACTION: Recalibrate or replace.

TABLE 7-1

TROUBLESHOOTING GUIDE

15.	TROUBLE:	Unloading Valve Transducer (UVT) or Inlet Valve Transducer (IVT) has low output pressure.
	CAUSE:	Insufficient air supply pressure.
	ACTION:	Increase air supply pressure.
	CAUSE:	Defective analog output channel.
	ACTION:	Replace CPU or I/O Module (R1000). Investigate panel and contact FS-Elliott.
	CAUSE:	Valve assembly binding.
	ACTION:	Clean or replace valve assembly.
	CAUSE:	Ruptured diaphragm allowing air leakage between spacer ring, bonnet and/or body.
	ACTION:	Replace diaphragm.
16.	TROUBLE:	Horn fails to sound.
	CAUSE:	Defective Channel on CPU Module or I/O Module output channel (R1000).
	ACTION:	Replace CPU Module or I/O module (R1000). Investigate panel and contact FS-Elliott.
	CAUSE:	Defective horn.
	ACTION:	Replace horn.

NOTES

INTRODUCTION

This section provides motor starter device setting guidelines and manufacture information pertaining to the main motor starter. Refer to the appropriate motor starter outline and wiring diagram at the end of the section.

FS-ELLIOTT MOTOR STARTER ENCLOSURE SET POINT GUIDELINES (WYE-DELTA Starters)

Refer to Benshaw RediStart Solid State Starter Software Manual Mx Control (Pages 129 & 130) and the Benshaw RediStart Solid State Starter Quick Start Guide for Mx Control for details on Wye-Delta Starter guidelines.

In order for the starter to operate properly, there are four parameters that need to be validated before the starter can correctly start a motor.

P1 Motor FLA: Reference motor nameplate for full load amps.

P2 Motor Service Factor: Use 1.15 SF.

P3 Motor Over Load Class while Running: FS Elliott recommends setting the initial setting at 10% that is the default setting. The setting can be adjusted depending on site conditions.

P9 Up to Speed Time (UTS): The default setting is 20 seconds; however, if the motor takes longer than 20 seconds to accelerate to full speed then the time needs to be increased accordingly. This setting determines when the contacts switch from the Wye to Delta Mode. It is important that this be set properly, otherwise compressor damage can occur.

AOP OLCB (Auxiliary Oil Pump Motor Controller): To be set at the auxiliary oil pump motors full load amp (FLA) value as indicated on the 2.0 HP motor's nameplate.

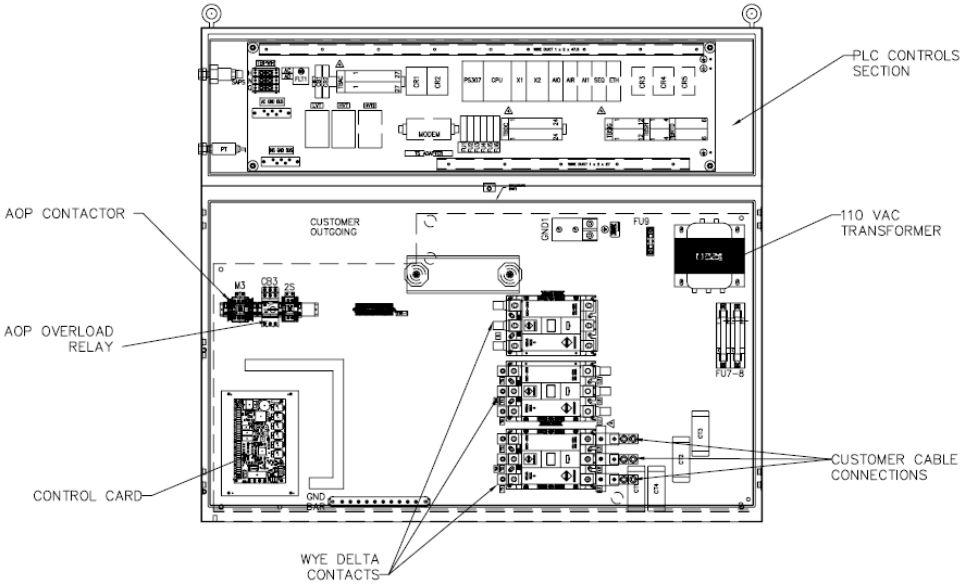

WYE-DELTA STARTER / CONTROL PANEL
FIGURE 8-1

FS-ELLIOTT MOTOR STARTER ENCLOSURE SET POINT GUIDELINES
(Solid State Starters)

In order for the starter to operate properly, there are seven parameters that need to be validated before the starter can correctly start a motor.

Reference the attached Benshaw RediStart Solid State Starter Quick Start Guide for Mx Control in this section for the Solid State Starters. The guide provides recommendations for each parameter and how to adjust the parameters settings. In addition to the recommendations in this guide, the following are FS Elliott's additional recommendations.

<u>P1 Motor FLA</u>: Reference motor nameplate for full load amps.

<u>P2 Motor Service Factor</u>: Use 1.15 SF.

<u>P3 Motor Over Load Class while Running</u>: FS Elliott recommends setting the initial setting at 10%, which is the default setting. The setting can be adjusted depending on site conditions.

<u>P6 Initial Motor Current</u>: Start with setting at 75% and adjust as needed for site conditions.

<u>P7 Maximum Motor Current</u>: Set at 600% unless the power system or load dictates the setting of a lower maximum current.

P8 Ramp Time: A typical ramp time setting is from 15 to 30 seconds.

P9 Up to Speed Time (UTS): Time is to be set longer than Ramp Time.

AOP OLCB (Auxiliary Oil Pump Motor Controller): To be set at the auxiliary oil pump motors full load amp (FLA) value as indicated on the 2.0 HP motor's nameplate.

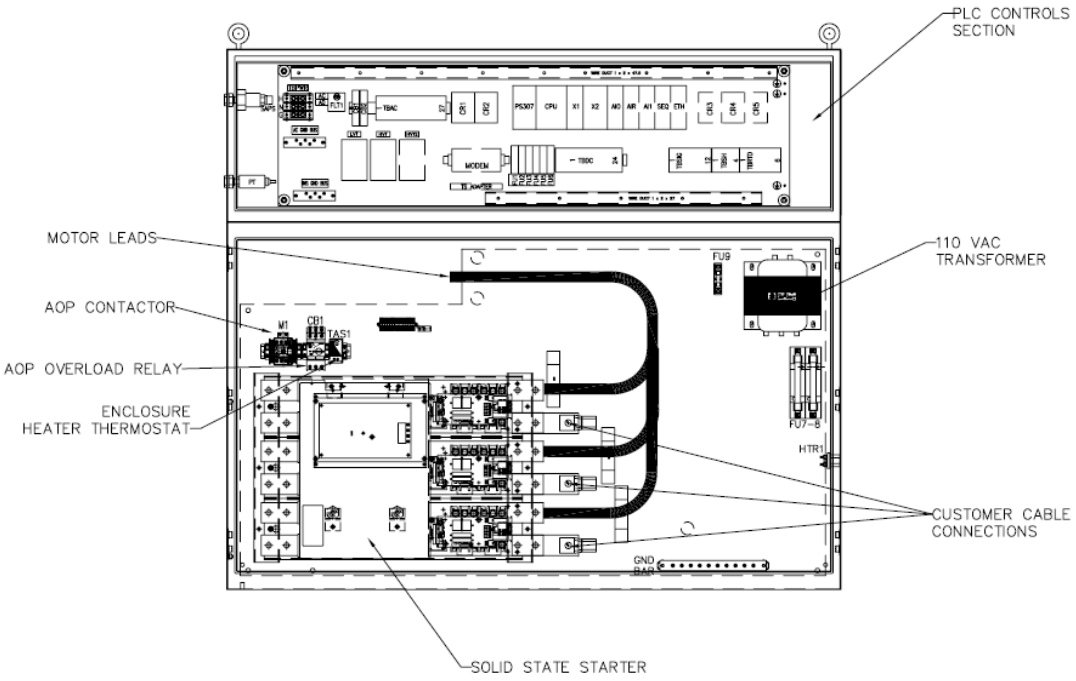

SOLID STATE STARTER / CONTROL PANEL
FIGURE 8-2

NOTES

ACCESSORIES
Factory Order: B6ET2E081

Index No.	Description	Drawing/Document Number
1	**Inlet Air Filter**	**Outline: SP2257-10**
2	**Jack Pads**	**Outline: JP1616-10**
3	**Discharge Check Valve**	**Outline: RP0447-4** **Instructions: MI-200**
4	**Coupling** PRLFS10633-1	**Outline: GP0210-4**
5	**System Pressure Transmitter (SPT) & Cable**	**Outline: P8650A521** **Outline: P8650A613**
6	**Main Motor Starter**	**Outline: EN-MP0701-0B** **Wiring Schematic** **Instructions: 890034-01-02** **890034-04-00**
	Main Motor	**Customer Supplied**

End of Accessories.

NOTES

SP2257

PARTS LIST					
QTY	UOM	PART NAME	PART NO. (SEE NOTE 1)	ITEM NO.	
*	EA	AIR INTAKE FILTER/SILENCER	SP2257-10	10	

SPARE PARTS LIST					
QTY	UOM	PART NAME	PART NO. (SEE NOTE 1)	ITEM NO.	
1	EA	PANEL FILTER, 1ST STAGE	LP1068-1	11	
1	EA	PANEL FILTER, 2ND STAGE	LP1069-1	12	
1	EA	U-TUBE MANOMETER WITH MAGNETIC CLIPS, DWYER FLEX TUBE	LP1070-1	13	

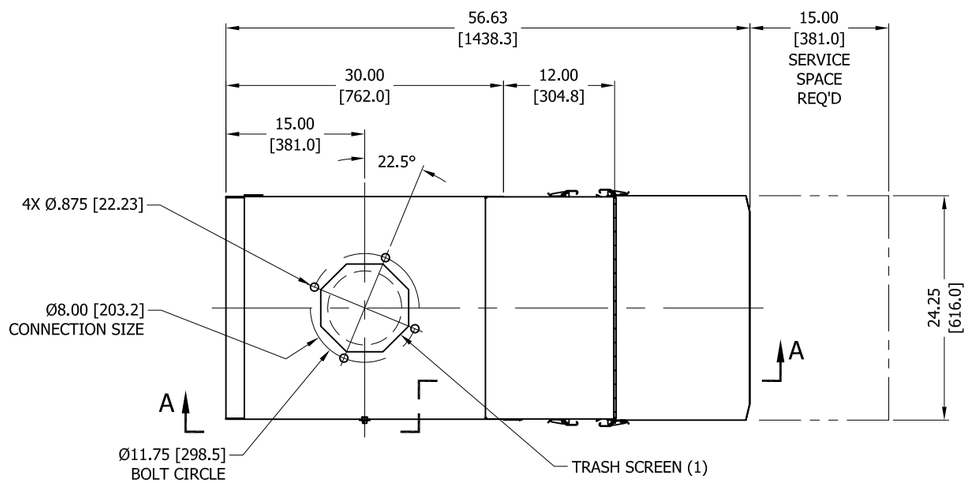

PLAN VIEW

TOP PANEL REMOVED

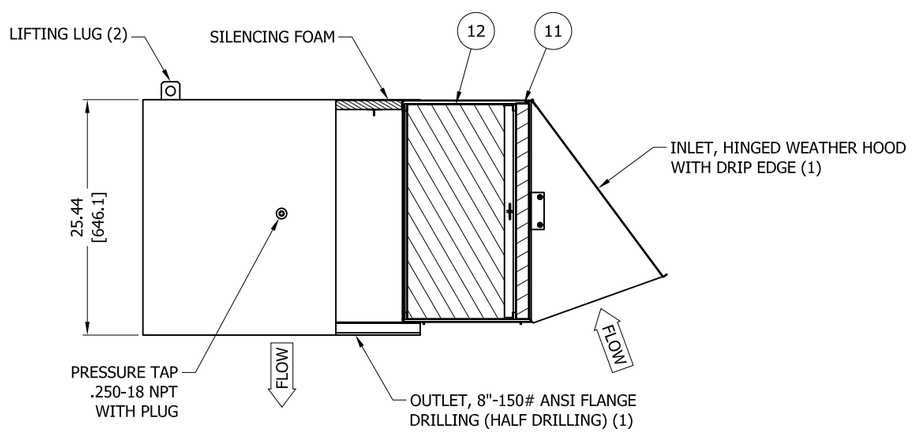

ELEVATION VIEW

SECTION A-A

SPECIFICATIONS

MATERIAL: GALVANNEAL AND CARBON STEEL CONSTRUCTION.
EXTERIOR SURFACES: STANDARD BRUSH/WIPE CLEAN.
INTERIOR & EXTERIOR PAINT: FS ELLIOTT CHAMPION BLUE PER PROCESS SPEC PS-526. SEE NOTE 2.
DRY WEIGHT: 165 LB. (APPROXIMATE).
CAPACITY: 2,500 SCFM.

NOTES

1. PART NUMBERS ARE FOR A QUANTITY OF ONE (1). ORDER QUANTITY REQUIRED.
2. SEAL CAULK INTERIOR AND EXTERIOR SEAMS AFTER PAINTING.
3. PRESSURE DROP @ MAXIMUM FLOW (INCHES H_2O) FOR P200 COMPRESSOR: FILTER 0.26, PLENUM 0.34, TOTAL 0.60.
4. PRESSURE DROP @ MAXIMUM FLOW (INCHES H_2O) FOR P300 COMPRESSOR: FILTER 0.74, PLENUM 1.34, TOTAL 2.08.
5. MANOMETER (ITEM 13) TO BE SUPPLIED BY FILTER VENDOR, SHIPPED SEPARATELY AND MOUNTED BY CUSTOMER.

CHANGE DESCRIPTION

SUPERSEDED BY

SUPERSEDES

UNLESS OTHERWISE NOTED DIMENSIONS ARE IN INCHES
DIMENSIONS SHOWN IN BRACKETS [] ARE IN MILLIMETERS

DR. J.GOMBOS
CK. D.YANKES
DES.AP.
ENG.AP. M.EVAN
MFG.AP.
CAST.AP.
DATE 8/6/2013
S.O. FUTURE
SCALE .12:1.00
SIMILAR TO LP0944
PROCESS SPEC

AIR INTAKE FILTER/SILENCER
WITH MANOMETER

USED ON: P300

THIS DRAWING AND ALL INFORMATION SHOWN THEREON IS THE EXCLUSIVE PROPERTY OF FS-ELLIOTT COMPANY, LLC. AND IS PROVIDED SUBJECT TO THE EXPRESS CONDITION THAT THE DRAWING IS NOT TO BE REPRODUCED IN WHOLE OR IN PART, OR USED FOR THE BENEFIT OF ANYONE OTHER THAN FS-ELLIOTT COMPANY, LLC.; AND NO INFORMATION SHOWN IN THIS DRAWING MAY BE DISCLOSED OR USED IN ANY WAY.

ASSOCIATE PLANT IDENTIFICATION

SHEET 1 OF 1

FS ELLIOTT

© 2013 FS-ELLIOTT COMPANY, LLC.

AUTOCAD GENERATED DRAWING

SP2257

REV 0

YC- JP1616

QTY	UOM	PART NAME	PART NUMBER	ITEM	MAKE FROM P/N
1	EA	PAD,JACKING	P594J211	1	
1	EA	PLATE–JACKPAD	JP1615–1	4	
X	EA	ASSEMBLY–JACKPAD	JP1616–10	10	

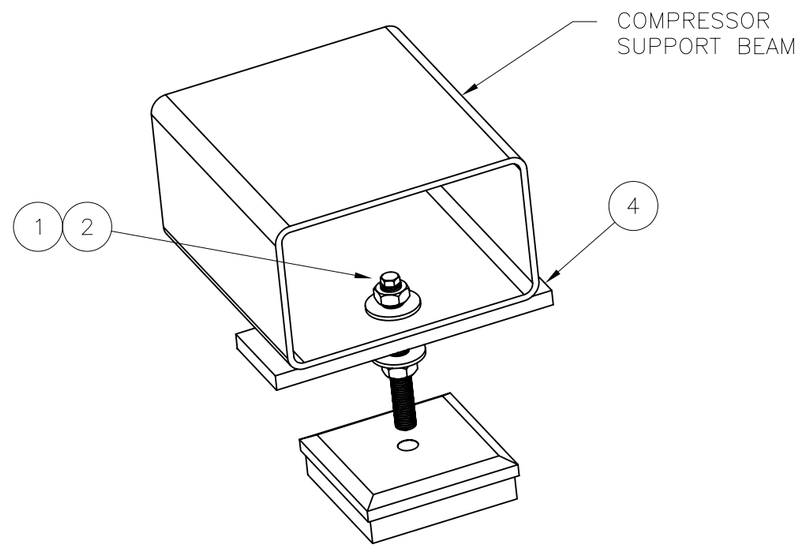

NOTE:

ITEMS 1 AND 2 CONSIST OF;
1 PAD
1 STUD
2 FLAT WASHERS
2 HEX NUTS

AP ZONE	CHANGE DESCRIPTION
	ECN08–587 ITEM 1, P/N WAS 1 P594J111. ITEM 2, P/N WAS P594J112. S.WALROTH 11–21–08

CAD GENERATED DRAWING

WORKING TOLERANCES UNLESS OTHERWISE SPECIFIED

CASTING			MACHINING	FABRICATION
CLASS 1 □	CLASS 2 □	CLASS 3 □	± .01 THRU 2.00 ± .015 OVER 2.00 THRU 10.00 ± .03 OVER 10.00	± .12 THRU 24.00 ± .24 OVER 24.00
± .06 THRU 6.00 ± .12 OVER 6.00 THRU 12.00 ± .18 OVER 12.00 THRU 24.00 ± .24 OVER 24.00 ADD .04 FOR PARTING SPLIT	± .12 THRU 6.00 ± .24 OVER 6.00 THRU 24.00 ± .38 OVER 24.00 THRU 60.00 ± .50 OVER 60.00 ADD .06 FOR PARTING SPLIT	± .24 THRU 24.00 ± .38 OVER 24.00 THRU 60.00 ± .50 OVER 60.00 ADD .12 FOR PARTING SPLIT	ANGLES THRU 1/4" ±2° ANGLES OVER 1/4" ±1/2° SURFACE ROUGHNESS MACHINING √ MICRO–INCHES CASTING C–	

UNIFIED SCREW THREADS – CLASS 2A & 2B
ISO METRIC THREADS – CLASS 6H & 6g

THIRD ANGLE PROJECTION

DR. SHEETS
CK. SHEETS
DES.AP. N/A
ENG.AP. TURNEY
MFG.AP. N/A
CAST.AP. N/A
DATE 10–18–05
S.O. D11200M10
SCALE .50=1.00
ASSY.
SIMILAR TO
PROCESS SPEC

ASSEMBLY-JACKPAD

FIRST USED ON: P300, P400, P500 COMPR.

THIS DRAWING AND ALL INFORMATION SHOWN THEREON IS THE EXCLUSIVE PROPERTY OF FS–ELLIOTT COMPANY, LLC., AND IS PROVIDED SUBJECT TO THE EXPRESS CONDITION THAT THE DRAWING IS NOT TO BE REPRODUCED IN WHOLE OR IN PART, OR USED FOR THE BENEFIT OF ANYONE OTHER THAN FS–ELLIOTT COMPANY, LLC.; AND NO INFORMATION SHOWN IN THIS DRAWING MAY BE DISCLOSED OR USED IN ANY WAY.

ASSOCIATE PLANT IDENTIFICATION

SHEET 1 OF 1

FS ELLIOTT

© 2008 FS–ELLIOTT COMPANY, LLC.

CAD GENERATED DRAWING

YC- JP1616 REV 1

SUPERSEDED BY

SUPERSEDES

XC-RP0447

VALVE SIZE (NOMINAL PIPE SIZE)	"Cv"	"A"	"B"	"C"	"D"	WEIGHT LB [KG]
2	84	2.13 [54.0]	4.13 [104.8]	4.25 [108.0]	1.19 [30.2]	4.2 [1.9]
2-1/2	137	2.38 [60.3]	4.88 [123.8]	4.50 [114.3]	1.38 [35.1]	6.1 [2.8]
3	221	2.63 [66.7]	5.38 [136.5]	5.00 [127.0]	1.69 [42.9]	8.4 [3.8]
4	373	2.25 [57.2]	6.88 [174.6]	5.75 [146.1]	2.75 [69.9]	13.5 [6.2]
5	679	2.50 [63.5]	7.75 [196.9]	6.50 [165.1]	3.63 [92.2]	18.1 [8.2]
6	931	2.75 [69.9]	8.75 [222.3]	7.25 [184.2]	4.50 [114.3]	22.5 [10.2]
8	1440	2.88 [73.0]	11.00 [279.4]	8.25 [209.6]	5.75 [146.1]	34.5 [15.7]
10	2623	3.13 [79.4]	13.38 [339.7]	9.63 [244.6]	7.50 [190.5]	50.9 [23.1]
12	3531	3.38 [85.7]	16.13 [409.6]	10.75 [273.1]	8.75 [222.3]	83.7 [38.0]

PARTS LIST

QTY.	UOM	PART NAME	PART NO.	ITEM NO.
		VALVE, CHECK	RP0447-1	1
		VALVE, CHECK	RP0447-2	2
		VALVE, CHECK	RP0447-3	3
		VALVE, CHECK	RP0447-4	4
		VALVE, CHECK	RP0447-5	5
		VALVE, CHECK	RP0447-6	6
		VALVE, CHECK	RP0447-7	7
		VALVE, CHECK	RP0447-8	8
		VALVE, CHECK	RP0447-9	9

SPARE PARTS LIST

QUANTITY REQUIRED	DESCRIPTION	ITEM 1 2" LINE	ITEM 2 2-1/2" LINE	ITEM 3 3" LINE	ITEM 4 4" LINE	ITEM 5 5" LINE	ITEM 6 6" LINE	ITEM 7 8" LINE	ITEM 8 10" LINE	ITEM 9 12" LINE
1	SPRING	RP0447-11	RP0447-21	RP0447-31	RP0447-41	RP0447-51	RP0447-61	RP0447-71	RP0447-81	RP0447-91
1	PIN	RP0447-13	RP0447-23	RP0447-33	RP0447-43	RP0447-53	RP0447-63	RP0447-73	RP0447-83	RP0447-93
2	PLUG, PIPE	RP0447-14	RP0447-24	RP0447-34	RP0447-44	RP0447-54	RP0447-64	RP0447-74	RP0447-84	RP0447-94
X	SPARE KIT, CHECK VALVE	RP0447-20	RP0447-30	RP0447-40	RP0447-50	RP0447-60	RP0447-70	RP0447-80	RP0447-90	RP0447-100

SPARE KIT NOTE: REPLACEMENT O-RING IS NOT PROVIDED WITH KIT. O-RING CAN ONLY BE REPLACED AT VENDOR'S FACTORY.

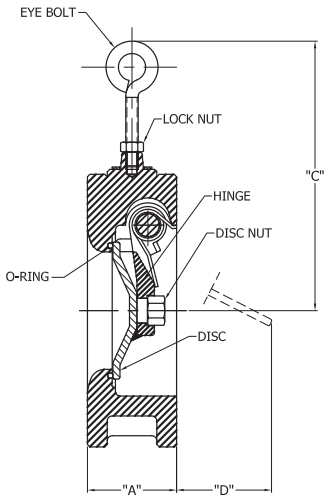

SECTION "A-A"

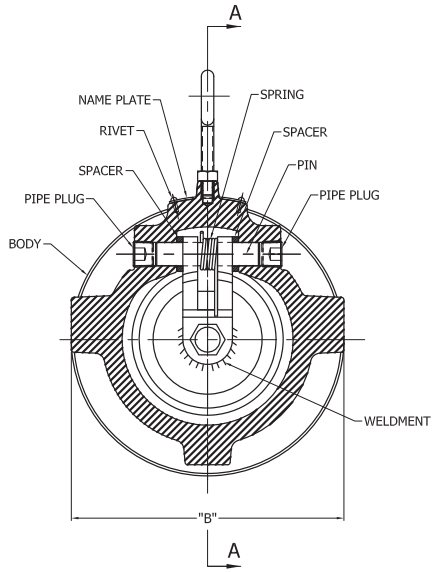

ITEM DESCRIPTION	MATERIAL
BODY	316 SST
DISC	316 SST
HINGE	316 SST
SPRING	ASTM A313-316
PIPE PLUG	316 SST
O-RING	TEFLON

NOTES:

1. VALVE IS DESIGNED FOR INSTALLATION BETWEEN ANSI 150# FLANGES OR STANDARD 125# CAST IRON FLANGES.
2. VALVE MAY BE INSTALLED IN LINES WITH HORIZONTAL FLOW OR WITH NORMAL VERTICAL UP FLOW.
3. CONNECTION FLANGES AND BOLTS ARE NOT PROVIDED.
4. TEMPERATURE RATING: -40°F [-40°C] TO 300°F [149°C].
   PRESSURE RATING: 275 PSIG [19 BARG] @100°F [38°C].
   190 PSIG [13.1 BARG] @300°F [149°C].
5. CHECK VALVES ON THIS DRAWING ARE TO BE USED ON APPLICATION RANGES OF: -40°F [-40°C] TO 300°F [149°C].
6. FOR APPLICATIONS WITH TEMPERATURE RANGES OF 300°F [149°C] TO 450°F [232°C] USE DRAWING RP0466.

△	CHANGE DESCRIPTION
1	ECN12-140 REVISED NOTE 4, ADDED NOTES 5 & 6 SEE ECN FOR DETAILS. E.MCCOY 03/12/2012
1A	NO MFG CHANGES REQ'D IN SPARE PARTS LIST; REVISED LINE SIZES FOR ITEMS 5 THRU 8, ADDED ITEM 9. R.WELLER 05-21-2012
1B	NO MFG CHANGES REQ'D REVISED SPARE PARTS LIST E.MACDONALD 12-06-2012
2	ECN14-22 ADDED SPARE KIT NOTE DELETED O-RING FROM SPARE PARTS LIST C.KEESE 1-9-14

UNLESS OTHERWISE NOTED DIMENSIONS ARE IN INCHES
DIMENSIONS SHOWN IN BRACKETS [] ARE IN MILLIMETERS

DR. E.MCCOY	VALVE, CHECK
CK. D.SIPES	
DES.AP.	DISCHARGE
ENG.AP. M.TURSKY	
MFG.AP.	USED ON: PAP
CAST.AP.	
DATE 03-06-12	
S.O. D11200M10	
SCALE N.T.S.	
SIMILAR TO HP0118	
PROCESS SPEC	

THIS DRAWING AND ALL INFORMATION SHOWN THEREON IS THE EXCLUSIVE PROPERTY OF FS-ELLIOTT COMPANY, LLC. AND IS PROVIDED SUBJECT TO THE EXPRESS CONDITION THAT THE DRAWING IS NOT TO BE REPRODUCED IN WHOLE OR IN PART, OR USED FOR THE BENEFIT OF ANYONE OTHER THAN FS-ELLIOTT COMPANY, LLC.; AND NO INFORMATION SHOWN IN THIS DRAWING MAY BE DISCLOSED OR USED IN ANY WAY.

ASSOCIATE PLANT IDENTIFICATION

SHEET 1 OF 1

FS ELLIOTT

© 2012 FS-ELLIOTT COMPANY, LLC.

AUTOCAD GENERATED DRAWING

XC- RP0447 REV 2

SUPERSEDED BY

SUPERSEDES

Ritepro Corporation

A SUBSIDIARY OF / UNE FILIALE DE BRAY INTERNATIONAL INC.

INSTALLATION AND MAINTENANCE MANUAL

FOR

CHECK RITE WAFER TYPE SWING CHECK VALVES

MI-200

SIZES 1½" - 42"

ANSI SERIES: 125 - 2500

MODELS 201, 202, 203, 205, 210, 211, 212, 260, 262

10 August 2005

Ritepro Corporation, 12200 Albert Hudon, Montreal, Quebec, Canada, H1G 3K7
Tel: (514) 324-8900 ! Fax: (514) 324-9525
Web Site: www.ritepro.com ! Email: sales@ritepro.com

Table of Contents

Subject ***Page***

1.0 Introduction to Check Rite Wafer Type Swing Check Valves 2

2.0 Description of Check Rite Valves 2

3.0 Dis-Assembly and Assembly Instructions for Check Rite Wafer Type Swing Check Valves 4

4.0 Installation Instructions 6

5.0 Maintenance Requirements and Information 7

6.0 Check Rite and Spool Installation 8

7.0 Nameplates 8
Serial Number 8
Figure Number 8

8.0 Safety Warnings 9

9.0 Non Shock Pressure -Temperature Ratings 10
Cast Iron (ASTM A126-CLB) 10
Ductile Iron (ASTM A395) 10
Carbon Steel (ASTM A216-WCB) 10
Stainless Steel (ASTM A351-CF8M) 11

Illustrations

2" - 12" Series 125/150/300 Model 210 12

14" - 42" Series 125/150 Model 210 13

Stud Dimensions E-8 ANSI Series 125 - 1500 14

Spool Dimensions E-9 ANSI Series 125 / 150 / 300 15

2" - 12" Series 150 / 300 Model 262... 16

1.0 Introduction to Check Rite Wafer Type Swing Check Valves

Modern piping applications demand better features, performance and economy in a check valve.

Features:

- Simplicity
- Compactness
- Minimum Weight

Performance Characteristics:

- Silent operation
- Non Slamming
- Rapid Response
- Low Pressure Drop
- Bubble Tight Shut-Off

A combination of these features and performance characteristics ensure long service life as characterized by Check Rite.

2.0 Description of Check Rite Valves.

Check Rite valves consist of a compact Body (1) with a single plate Disc (12) attached to a Hinge (2) which in turn is supported by a Hinge Pin (7) inside an off-center body cavity.

The Disc is mechanically biased to the closed position by a torsional Spring (5) located between the two hinge lugs. The Hinge Pin (7) is retained by two NPT Pipe Plugs (8) inside the Body (1). The Seat (3) can be:

- Metal to Metal
- Metal to Buna, Viton or Teflon

An Eyebolt (10) located on the top of the Check Rite valve aids for easy installation.

The Nameplate (11) located on the top pad specifies:

- Size
- Serial Number
- Figure Number (Pressure Class and Materials)
- Ritepro Corporation

Check Rite valves are designed to open when a pressure of less than 1 psi (.07 bar) is applied across the face of the Disc (12).

Check Rite valves are provided for installation inside the bolt circle and between standard flanges, using flat faced asbestos gaskets or as specified.

Check Rite valves are normally installed with the Eyebolt pointing vertically upwards in a horizontal run of pipe, with the arrow on the Body pointing in the direction of flow.

For vertical pipe run applications, the flow direction is the only orientation required in a straight length of pipe.

All Check Rite valves are hydrostatically tested in accordance with MSS-SP-61 test procedures and zero leakage criteria.

In addition a "Zero Head Leakage" test is performed, where the Check Rite valves are placed in a horizontal position (see sketch) with the flow direction pointing vertically upwards.

An internal hydrostatic pressure equivalent to the head of water which can be retained within the downstream portion of the valve body is applied. During this one hour test, no leakage is allowed.

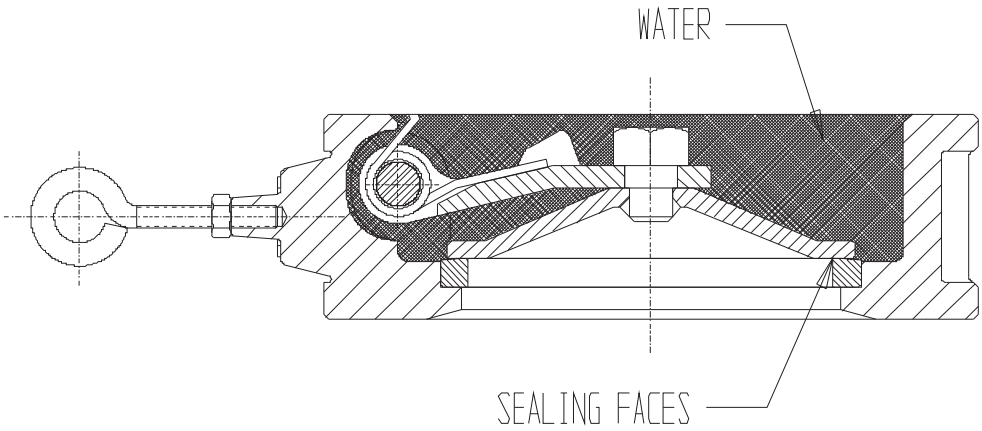

Check Rite valves are manufactured to high quality levels as specified in the applicable standards such as ANSI, MSS, API and CSA.

Check Rite valves in sizes 14" to 42" in classes 125 to 300 and all sizes in the higher pressure classes have a different Hinge-Disc connection which is illustrated on the applicable Specification Sheets.

The standard connection for small valves 2" to 12" classes 125 to 300 is a welded assembly, by means of a Shoulder Pin (4) passing through the Hinge (2) and Seal-welded to the Disc (12). In the larger sizes and higher pressure classes, the Disc (12) is assembled to the Hinge (2) with a Nut (15) and secured by welding.

A heavy duty Hinge (2) is available for valves sizes 2" to 24" in which the Disc (12) is attached to the Hinge (2) with a Nut (15) and a weld is used to secure the components. This is the Model 260-262 valve. All other dimensions, maintenance procedures, and O-Ring sizes apply as stated in this manual.

3.0 Dis-Assembly and Assembly Instructions for Check Rite Wafer Type Swing **Check Valves**

The simple design of the Check Rite valve permits for easy assembly and disassembly.

The following assembly procedure applies to all Check Rite valves.

To Dis-assemble the valve:

a) Place the Body (1) in a horizontal position with the disc assembly showing.
b) Remove the Plugs (8) on either side of the Body (1).
c) Hold the Spring (5) in position and slide the Pin (7) out of the Body (1).
d) Slowly release the pressure on the Spring (5) and remove it from the valve.
e) The Hinge-Disc Assembly can now be lifted from the Body (and disassembled, if required, on large sizes).
f) Remove the Spacers (6).
g) Remove the O-Ring (14) if required.

To re-assemble the valve:

a) Clean all parts with Varsol or other acceptable solvent.
b) Place the Body (1) in a horizontal position with the seating face pointing upwards.
c) If required, insert O-Ring (14) in the seat groove. (See next page for installation instructions).
d) Place the Hinge-Disc Assembly (2,12) in the body cavity.
e) Insert the Pin (7) through the plug hole on either side of the Body and slide a Spacer (6) in between the Body (1) and adjacent hinge lug.
f) Press Torsion Spring (5) between the hinge lugs and body cavity, then advance the Pin (7) through the Spring (5) and the second hinge lug.
g) Slide the second Spacer (6) between the Body and hinge lug and advance the Pin (7) into the Body (1).

Position the Hinge Pin (7) central to the valve body prior to the installation of the retaining Plugs (8).

h) Check that the torsion spring ends are seated properly.
i) Apply Teflon tape or sealing compound on retaining Plugs (8), install Plugs and tighten both sides with an Allen key.

j) **Check:**

aa) that the valve opens and closes freely.

bb) that adequate freedom of movement of the Shoulder Pin-Disc connection is provided for the disc to adapt a self-aligning position with the seat.

IMPORTANT-INSERT O-RING AS FOLLOWS

aa) Place O-Ring (14) on top of seat groove.

bb) To prevent looping, insert the O-Ring as shown by pressing the O-Ring into the groove in the following numerical sequence.

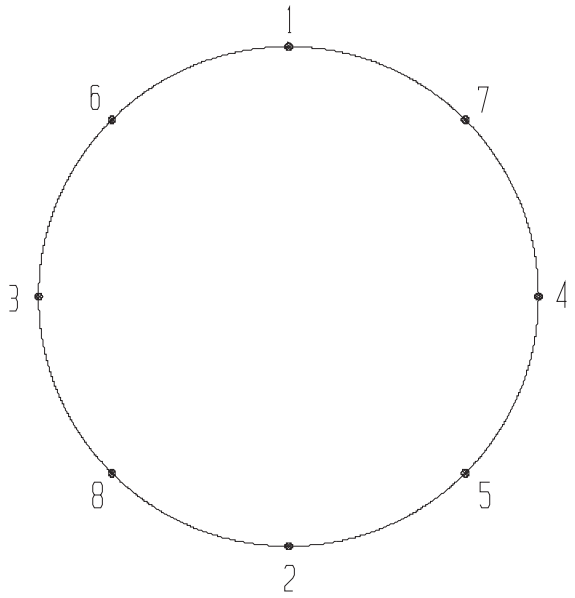

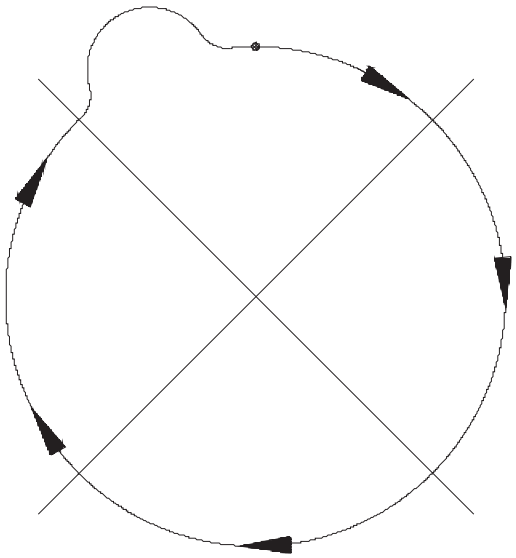

Right Wrong

cc) Having engaged the O-Ring in the groove according to the above illustration, proceed to smooth out the O-Ring using thumb pressure.

It is important to smooth out the O-Ring so that there are no visible ripples or loops.

It should be noted that the O-Ring groove is slightly larger than the O-Ring and it follows that the O-Ring must be hoop stretched to engage the groove.

4.0 Installation Instructions

The stud selection sheet (Specification Sheet E-8) shows the ease with which Check Rite valves are installed.

The valve is inserted between two companion flanges with gaskets on the contact faces. Studs are installed, which will span the valve, and tightened in the same manner as any flange connection.

The Check Rite valve outside diameter is designed to locate the valve in the same centerline as the companion flanges when mounted inside the studs.

The normal installation of a Check Rite valve is for horizontal flow with the hinge pin (7) in the horizontal upper position, or for vertical flow, with the flow direction upwards.

When removing a Check Rite valve from the line, only one half of the studs need to be removed and the others loosened.

IMPORTANT:

1) Check the flow arrow on the body before inserting the Check Rite valve between the flanges.

2) Pipeline flanges must be parallel and have the same pressure class rating as the valve.

3) There must be no obstructions in the flange or pipe bore as this would prevent the valve from opening fully.

If slip-on flanges are used, make sure that no weld projects into the pipe bore.

5.0 Maintenance Requirements and Information

No periodical maintenance work is required for Check Rite valves. For replacement of O-Rings refer to Section 3.0, "Assembly and Dis-assembly of Check Rite Valves".

The standard O-Ring numbers, Plug sizes and Allen key sizes for class 125/150/300 are listed below for valves 2"-42". For other classes, contact the factory.

Valve Size	*O-Ring Size S/N 82*	*O-Ring Size S/N 88*	*Plug Size NPT*	*Allen Key Size*
2"	127	128	1/4"	1/4"
2.5"	133	133	1/4"	1/4"
3"	141	141	3/8"	5/16"
4"	235	235	3/8"	5/16"
5"	243	242	3/8"	5/16"
6"	249	248	3/8"	5/16"
8"	260	259	1/2"	3/8"
10"	368	368	1/2"	3/8"
12"	448	447	3/4"	9/16"
14"	449		3/4"	9/16"
16"	453		3/4"	9/16"
18"	455		3/4"	9/16"
20"	458		1"	5/8"
24"	462		1"	5/8"
30"	471		1 1/2" *	1 1/4" *
36"	473		1 1/2" *	1 1/4" *
42"	3/8 x110"		2" *	1 5/16" *

* Square Head Plug

6.0 Check Rite and Spool Installation

As shown on Specification Sheet E-9, when a standard flanged valve is replaced with a wafer valve, a spool piece can be inserted with the Check Rite valve to obtain the required face to face dimension.

The installation instructions in Section 4.0 above apply.

7.0 Nameplates

Serial Number

The serial number gives the style of the valve internals and the date of manufacture of the valve.

The valve internals are based on either model 210 or 212. The first two digits of the serial number give the model.

82	Model 210
88	Model 212

For standard valves, the date of assembly is included in the Serial Number stamped on the nameplate attached to the valve. The last four digits of the serial number are the month and year of manufacture.

For UL/FM valves, the serial number is specified by UL and can be any numeric value. These valves are identified by the red paint and a special nameplate is used which includes the UL and FM logos. These valves are always based on Model 212.

A unique serial number is given to all special valves (not UL/FM). For special valves (including UL/FM) the month and year of manufacture are either stamped on the nameplate or on the exterior diameter of the flange, depending on valve size.

Figure Number

The figure number consists of at least five alphanumeric characters. The first two give the class of the valve. The next three give the principle materials of construction.

If the valve has a special model number, ie Model 260, this is stamped at the end of the code or if space prohibits this, then either underneath the code or on the outside diameter of the flange. The table on the following page explains the codes used.

UL/FM valves have either 212 or 312 for a figure number. The materials of construction are always cast iron body, buna seat, stainless internals and Teflon spacer. The applicable specification sheet gives more detailed information.

Valve Class	125	150	300	600	900	1500
Code	12	15	30	60	90	150

Body Material	Cast Iron	Ductile Iron	Steel	Stainless Steel
Code	C	D	S	X

Seat Material	Buna N	EPDM	Stainless Steel	Viton
Code	B	E	M	V

Spacer Material	Teflon	Bronze	Stainless Steel
Code	T	Y	Z

For example a class 150 check valve with a ductile iron body, stainless steel seat and Teflon spacers would be stamped: **15DMT**

8.0 Safety Warnings

1. The valve must be installed in the correct line size between flanges of the correct class.
2. The valve materials of construction must be compatible with the fluids being handled.
3. Pressures and temperatures must be kept within the limits specified by the appropriate ANSI standard, ie: B16.1, B16.34, B16.42, or within the limits specified by the particular design. These values are given on the following pages.
4. An arrow on the body indicates the direction of flow through the valve. The valve must be installed with the arrow pointing in the correct direction.
5. For flow in the horizontal direction, the valve shall be installed with the Pin in the horizontal upper position with the eye bolt pointing vertically upwards.
6. The valve must be installed in the correct location in the pipeline. The disc must not open into or against other piping components such as valves, elbows, or tees. For the best performance and life of the valve, a minimum of 10 pipe diameters of straight pipe upstream and downstream of the valve is suggested. Any reduction in this length upstream of the valve reduces the life of the valve proportionally.
7. Plugs must not be removed from the valve while the pipeline is under pressure.
8. Flow rates must be within acceptable limits. Too high a rate may cause extreme pressure drops and erosion of the components. Too low a flow may cause the disc assembly to oscillate and cause wear which may lead to premature failure of the internals.
9. Care should be taken in handling the valve. Mishandling may lead to damage of the sealing components or damage to the externals.
10. Disturbed flow will reduce greatly the life of the valve. Best practice should have 5 straight pipe diameter upstream and 3 downstream.

9.0 Non Shock Pressure -Temperature Ratings

All temperatures in °F and pressures in psi.

Cast Iron (ASTM A126-CLB) **Ratings from ANSI B16.1.**
Class 125

	Temperature											
Size	***-20 to 150***	***200***	***225***	***250***	***275***	***300***	***325***	***353***	***375***	***406***	***425***	***450***
1"-12"	*200*	*190*	*180*	*175*	*170*	*165*	*155*	*150*	*145*	*140*	*130*	*125*
14"-24"	*150*	*135*	*130*	*125*	*120*	*110*	*105*	*100*				
28" to 48"	*150*	*115*	*100*	*85*	*65*	*50*						

Ductile Iron *(ASTM A395)* ***Ratings from ANSI B16.42.***
Class 150

	Temperature						
Size	***-20 to 100***	***200***	***300***	***400***	***500***	***600***	***650***
2"-42"	*250*	*235*	*215*	*200*	*170*	*140*	*125*

Carbon Steel *(ASTM A216-WCB)*
Ratings from ANSI B16.34.
Permissible, but not recommended for prolonged usage above about 800°F.

	Pressure Class				
Temperature	***150***	***300***	***600***	***900***	***1500***
-20 to 100	*285*	*740*	*1480*	*2220*	*3705*
200	*260*	*675*	*1350*	*2025*	*3375*
300	*230*	*655*	*1315*	*1970*	*3278*
400	*200*	*635*	*1270*	*1900*	*3170*
500	*170*	*600*	*1200*	*1795*	*2995*
600	*140*	*550*	*1095*	*1640*	*2735*
650	*125*	*535*	*1075*	*1610*	*2685*
700	*110*	*535*	*1065*	*1600*	*2665*
750	*95*	*505*	*1010*	*1510*	*2520*
800	*80*	*410*	*825*	*1235*	*2060*
850	*65*	*270*	*535*	*805*	*1340*
900	*50*	*170*	*345*	*515*	*860*
950	*35*	*105*	*205*	*310*	*515*
1000	*20*	*50*	*105*	*155*	*260*

Stainless Steel *(ASTM A351-CF8M)*
Ratings from ANSI B16.34.

	Pressure Class				
Temperature	**150**	**300**	**600**	**900**	**1500**
-20 to 100	275	720	1440	2160	3600
200	240	620	1240	1860	3095
300	215	560	1120	1680	2795
400	195	515	1030	1540	2570
500	170	480	955	1435	2390
600	140	450	905	1355	2255
650	125	445	890	1330	2220
700	110	430	865	1295	2160
750	95	425	845	1270	2110
800	80	415	830	1245	2075
850	65	405	810	1215	2030
900	50	395	790	1180	1970
950	35	385	775	1160	1930
1000	20	365	725	1090	1820
1050		360	720	1080	1800
1100		325	645	965	1610
1150		275	550	825	1370
1200		205	410	620	1030
1250		180	365	545	910
1300		140	275	410	685
1350		105	205	310	515
1400		75	150	225	380
1450		60	115	175	290
1500		40	85	125	205

Illustrations

2" - 12" Series 125/150/300 Model 210
14" - 42" Series 125/150 Model 210
Stud Dimensions E-8 ANSI Series 125 - 1500
Spool Dimensions E-9 ANSI Series 125 / 150 / 300
ANSI Series 150/300 Model 262

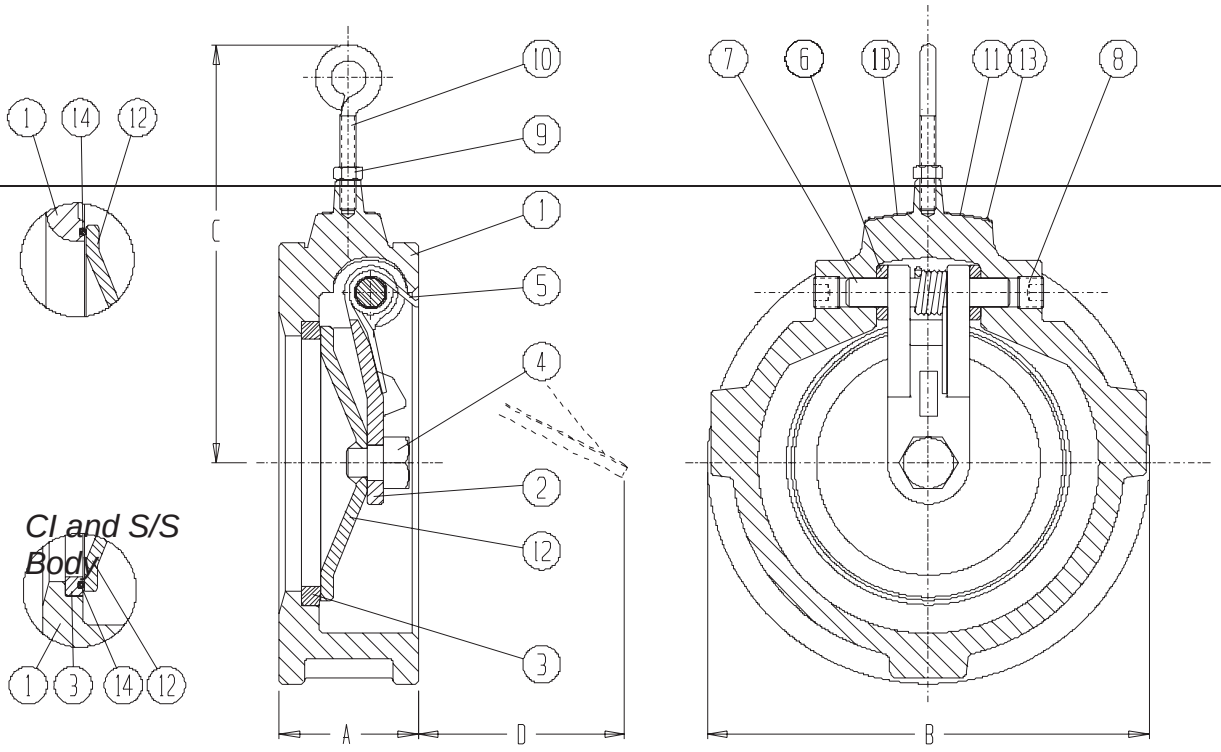

Item	Description	Standard Material
1	Body	ASTM A216-WCB
2	Hinge	ASTM A351-CF8M
3	Seat	ASTM A351-CF8
4	Shoulder Pin	ASTM A479-316
5	Spring	ASTM A313-316
6	Spacer	ASTM A479-316, Teflon
7	Pin	ASTM A479-316

Item	Description	Standard Material
8	Plug	Steel
9	Lock Nut	Steel Zinc Plated
10	Eye Bolt	Steel Zinc Plated
11	Name Plate	Aluminium
12	Disc	ASTM A240-316
13	Rivet	Steel Cad. Plated
14	O-Ring	Buna N, Viton, Teflon

Other body materials available: A126-CLB, A395, A351-CF8M, Monel, Alloy 20, Hastelloy, 254SMO.

Nominal Pipe Size		A		B Class 125/150		B Class 300		C		D		Weight	
Inch	mm	Inch	mm	Inch	mm	Inch	mm	Inch	mm	Inch	mm	lbs	kg
2	50	1.75 *	44.5	4.13	104.8	4.38	111.1	4.25	108	1.19	30	3.5	1.6
2 1/2	65	1.88 *	47.6	4.88	123.8	5.13	130.2	4.50	114	1.50	38	5.0	2.3
3	80	2.00 *	50.8	5.38	136.5	5.88	149.2	5.00	127	1.69	43	6.5	2.9
4	100	2.25	57.2	6.88	174.6	7.13	181.0	5.75	146	2.44	62	11	5.0
5	125	2.50	63.5	7.75	196.9	8.50	215.9	6.50	165	3.38	86	15	6.8
6	150	2.75	69.9	8.75	222.3	9.88	250.8	7.25	184	4.25	108	20	9.0
8	200	2.88	73.0	11.00	279.4	12.13	308.0	8.25	210	5.38	136	30	13.6
10	250	3.13	79.4	13.38	339.7	14.25	362.0	9.63	244	7.00	178	47	21.3
12	300	3.38	85.7	16.13	409.6	16.63	422.3	10.75	273	8.13	206	70	32

* Face to face for Cast Iron Class 125: 2": 2.13"
2½": 2.38"
3": 2.63"

Ritepro Corporation
A Subsidiary of Bray International, Inc

STANDARD SPECIFICATION SHEET
Check Rite Wafer Check Valves A-5
Series 125/150 Model 210
Date: 28 August 2001

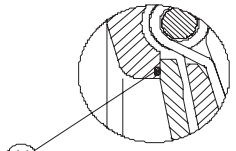

CI and S/S Body

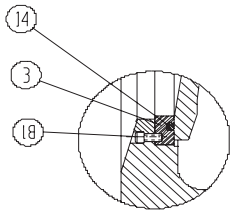

DI and Steel Body

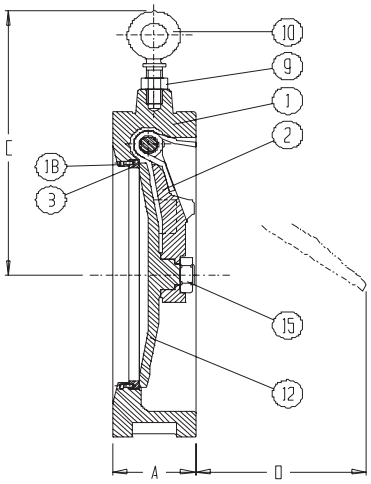

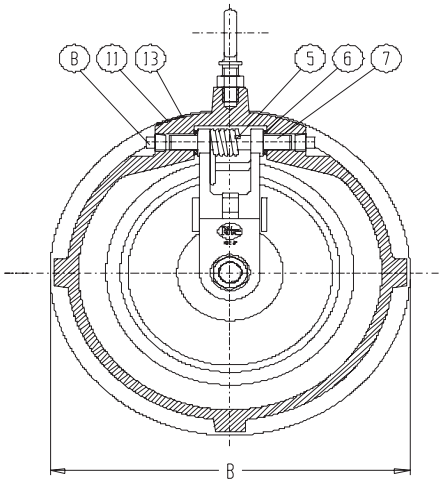

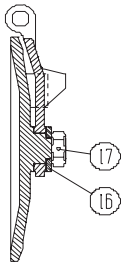

Item	Description	Standard Material
1	Body	ASTM A216-WCB *
2	Hinge	ASTM A216-WCB
3	Seat	ASTM A240-304
5	Spring	17-7PH Stainless
6	Spacer	ASTM A479-316
7	Pin	ASTM A479-316
8	Plug	Steel
9	Lock Nut	Steel Zinc Plated
10	Eye Bolt	Steel Zinc Plated

Item	Description	Standard Material
11	Name Plate	Aluminium
12	Disc	ASTM A351-CF8 **
13	Rivet	Steel Cad. Plated
14	O-Ring	Buna N, Viton, Teflon
15	Disc Nut	Steel
16	Disc Washer	Steel
17	Dowel Pin	Steel
18	SHCS	Steel

** 32" & Larger: A216-WCB with 304 overlay.

*Other body materials available: A126-CLB, A395, A351-CF8M, Monel, Alloy 20, Hastelloy, 254SMO.

Nominal Pipe Size		A		B		C		D		Weight	
Inch	*mm*	*Inch*	*mm*	*Inch*	*mm*	*Inch*	*mm*	*Inch*	*mm*	*lbs*	*kg*
14	*350*	*4.25*	*108.*	*17.6*	*447.*	*13.0*	*330*	*7.25*	*184*	*115*	*52*
16	*400*	*4.25*	*108.*	*20.1*	*511.*	*14.5*	*368*	*8.25*	*210*	*130*	*59*
18	*450*	*4.25*	*108.*	*21.5*	*546.*	*15.2*	*387*	*10.5*	*267*	*170*	*77*
20	*500*	*5.50*	*139.*	*23.7*	*603.*	*18.7*	*476*	*11.0*	*280*	*230*	*104*
24	*600*	*6.00*	*152.*	*28.1*	*714.*	*20.5*	*520*	*15.0*	*381*	*415*	*188*
28	*700*	*6.50*	*165.*	*32.5*	*825.*	*26.1*	*664*	*17.7*	*451*	*519*	*235*
30	*750*	*9.00*	*228.*	*34.6*	*879.*	*27.5*	*698*	*16.2*	*412*	*965*	*438*
32	*800*	*11.0*	*279.*	*36.7*	*933.*	*28.2*	*718*	*14.0*	*356*	*1150*	*522*
36	*900*	*11.5*	*292.*	*41.1*	*1044*	*30.0*	*762*	*18.2*	*464*	*1525*	*692*
42	*1050*	*12.0*	*304.*	*47.8*	*1216*	*33.2*	*844*	*28.0*	*712*	*2235*	*1014*

Ritepro Corporation
A Subsidiary of Bray International, Inc

STANDARD SPECIFICATION SHEET
Stud Dimensions E-8
ANSI Series 125 - 1500
Date: *20 April 2001*

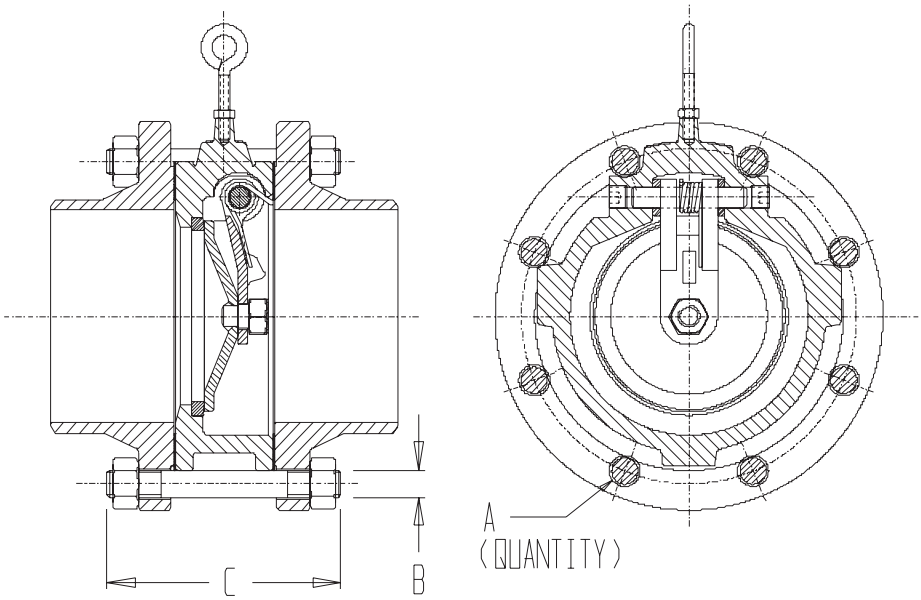

Nominal Pipe Size		Series 125 & 150			Series 250 & 300			Series 400		
		A	Stud Size B*C		A	Stud Size B*C		A	Stud Size B*C	
Inch	mm	Studs	Inch	mm	Studs	Inch	mm	Studs	Inch	mm
2	50	4	5/8*4.75	16*20	8	5/8*5.00	16*130	8	5/8*6.50	16*165
2 1/2	65	4	5/8*5.25	16*135	8	3/4*5.75	20*145	8	3/4*7.25	20*185
3	80	4	5/8*5.50	16*140	8	3/4*6.00	20*155	8	3/4*7.75	20*200
4	100	8	5/8*5.75	16*145	8	3/4*6.50	20*165	8	7/8*8.50	22*220
5	125	8	3/4*6.25	20*160	8	3/4*7.00	20*180			
6	150	8	3/4*6.50	20*165	12	3/4*7.50	20*190	12	7/8*11 .25	22*285
8	200	8	3/4*7.00	20*180	12	7/8*8.25	22*210	12	1*13.00	24*330
10	250	12	7/8*7.75	22*200	16	1*9.25	24*235	16	1 1/8*15.75	28*400
12	300	12	7/8*8.00	22*205	16	1 1/8*10.00	28*255	16	1 1/4*17.00	32*435
14	350	12	1*9.25	24*235	20	1 1/8*14.00	28*280			
16	400	16	1*9.50	24*245	20	1 1/4*14.75	32*295			
18	450	16	1 1/8*10.25	28*260	24	1 1/4*15.50	32*300			
20	500	20	1 1/8*11.50	28*295	24	1 1/4*16.75	32*345			
24	600	20	1 1/4*12.75	32*325	24	1 1/2*17.75	38*385			
30	750	28	1 1/4*18.00	32*460						
36	900	32	1 1/2*19.50	38*495						
42	1050	36	1 1/2*20.50	38*520						

Nominal Pipe Size		Series 600			Series 900			Series 1500		
		A	Stud Size B*C		A	Stud Size B*C		A	Stud Size B*C	
Inch	mm	Studs	Inch	mm	Studs	Inch	mm	Studs	Inch	mm
2	50	8	5/8*6.50	16*165	8	7/8*9.50	22*245	8	7/8*9.50	22*245
2 1/2	65	8	3/4*7.25	20*185	8	1*9.50	24*245	8	1*9.50	24*245
3	80	8	3/4*7.75	20*200	8	7/8*9.00	22*230	8	1 1/8*10.25	28*260
4	100	8	7/8*8.75	22*225	8	1 1/8*10.75	28*275	8	1 1/4*11.75	32*300
6	150	12	1*12.00	24*305	12	1 1/8*14.00	28*360	12	1 3/8*16.50	35*420
8	200	12	1 1/8*14.00	28*360	12	1 3/8*16.75	35*425	12	1 5/8*19.50	35*495
10	250	16	1 1/4*16.75	32*425	16	1 3/8*18.75	35*480	12	1 7/8*23.50	48*600
12	300	20	1 1/4*17.50	32*435	20	1 3/8*21.50	35*545	16	2*27.00	50*685

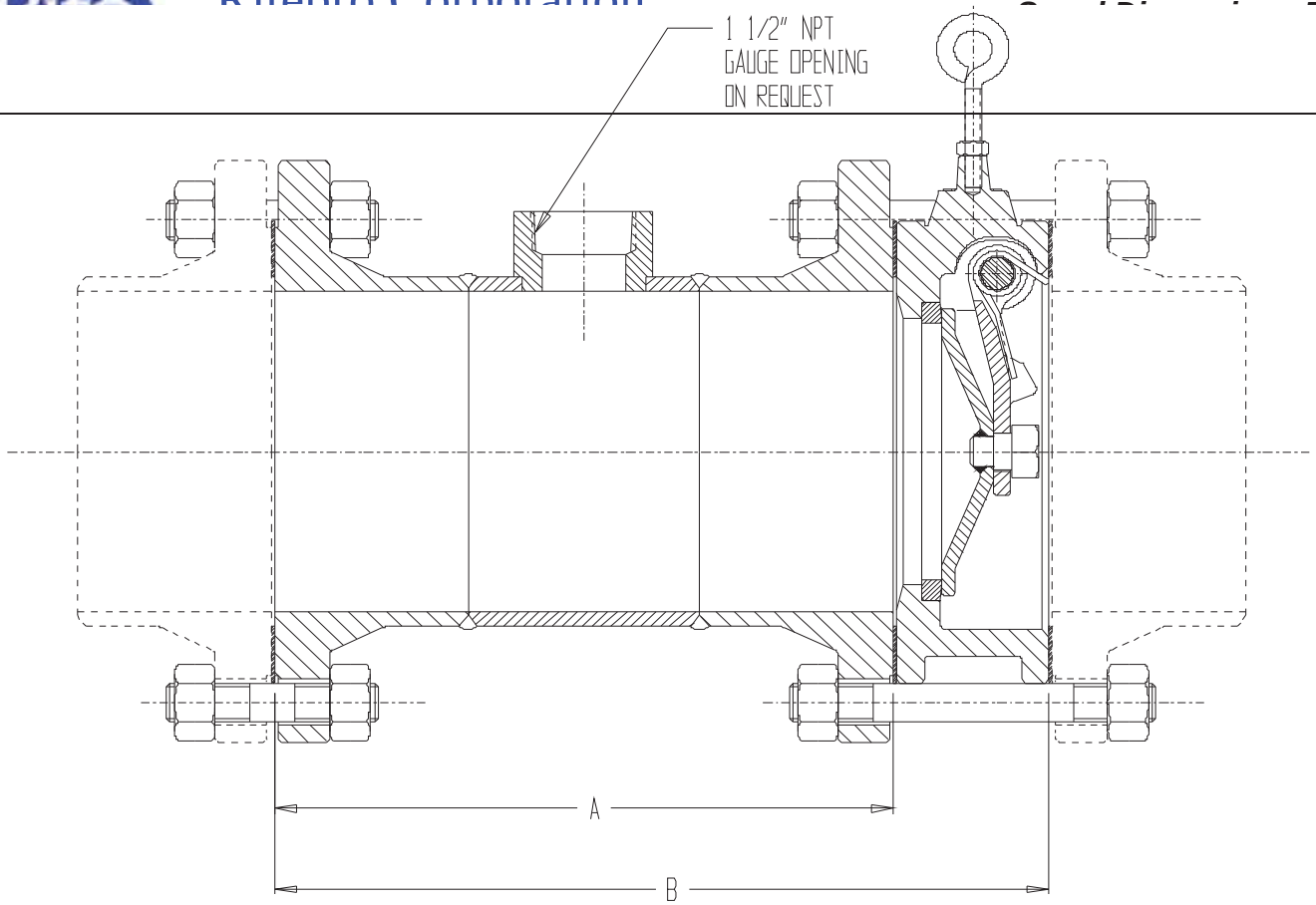

Nominal Pipe Size		Series 150				Series 300			
		A		B		A		B	
Inch	mm	Inch	mm	Inch	mm	Inch	mm	Inch	mm
2	50	6.19*	157*	8.0	203	8.69	221	10.5	267
2 1/2	65	6.56*	167*	8.5	216	9.56	243	11.5	292
3	80	7.44*	189*	9.5	241	10.44	265	12.5	318
4	100	9.19	233	11.5	292	11.69	297	14.0	356
5	125	10.44	265	13.0	330	13.19	335	15.75	400
6	150	11.19	284	14.0	356	14.69	373	17.5	445
8	200	16.56	421	19.5	495	18.06	459	21.0	533
10	250	21.31	541	24.5	622	21.31	541	24.5	622
12	300	24.06	611	27.5	699	24.56	624	28.0	711
14	350	26.69	678	31.0	787	25.69	652	33.0	838
16	400	29.69	754	34.0	864	26.44	672	34.0	864
18	450	34.19	868	38.5	978	30.44	773	38.5	978
20	500	32.94	837	38.5	978	31.31	795	40.0	1016
24	600	44.96	1141	51.0	1295	44.18	1122	53.0	1346
30	750	50.94	1294	60.0	1524				
36	900	65.44	1662	77.0	1956				

Dimension "B" corresponds to ANSI B16.10.

Nominal Pipe Size	Series 125	
	A	
Inch	Inch	mm
2	5.81	148
2 1/2	6.06	154
3	6.81	173

Remaining dimensions same as Series 150.

Ritepro Corporation
A Subsidiary of Bray International, Inc

STANDARD SPECIFICATION SHEET
Check Rite Wafer Type Swing Check Valve
ANSI Series 150/300 Model 262
Date: 21 April 2005

Designed to meet ANSI 16.34.

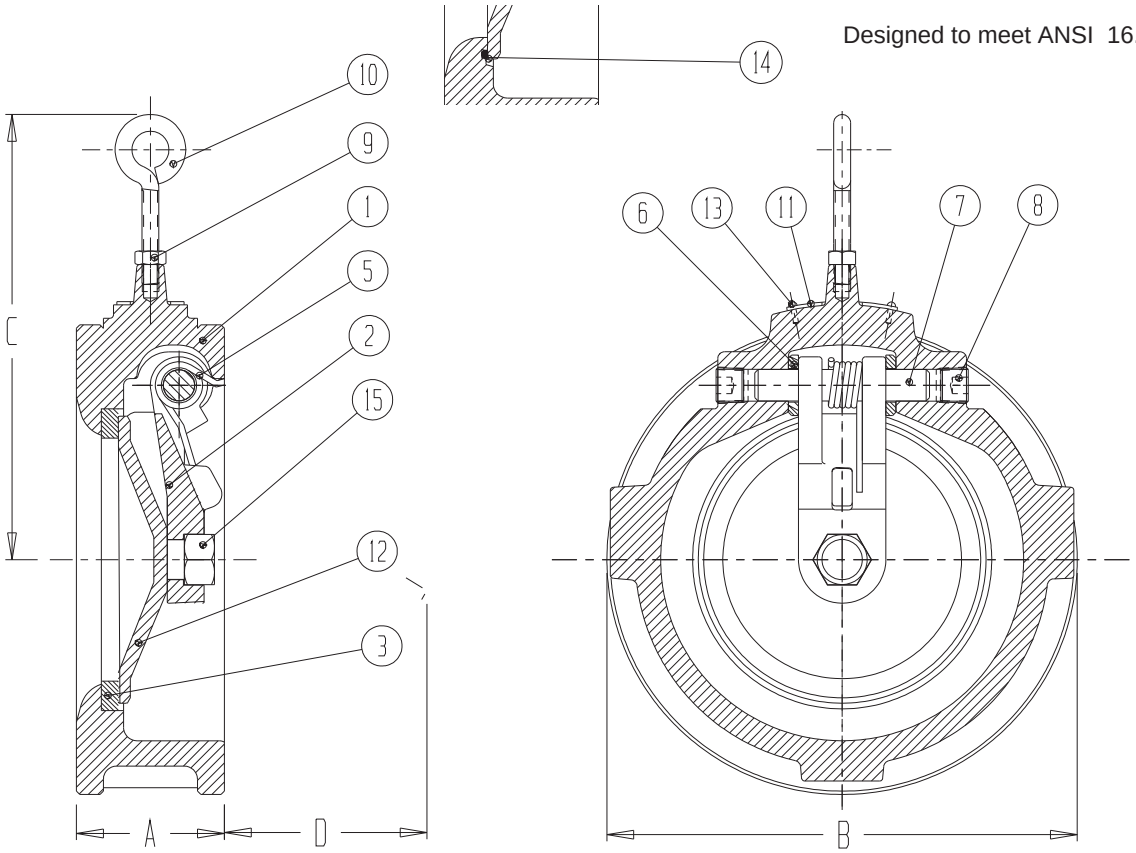

Item	Description	Standard Material
1	Body	ASTM A216-WCB
		ASTM A351-CF8M
		ASTM A395
2	Hinge	ASTM A351-CF8M
3	Seat	ASTM A240-304
5	Spring	ASTM A313-316
6	Spacer	ASTM A479-316
		TEFLON
7	Pin	ASTM A479-316

Item	Description	Standard Material
8	Plug	Steel
9	Lock Nut	Steel Zinc Plated
10	Eye Bolt	Steel Zinc Plated
11	Name Plate	Aluminium
12	Disc	ASTM A351-CF8M
13	Rivet	Steel Cad. Plated
14	O'ring	Buna, Viton , Teflon
15	Disc Nut	Stainless Steel

Nominal Pipe Size		A		B Class 150		B Class 300		C		D		Weight	
Inch	mm	Inch	mm	Inch	mm	Inch	mm	Inch	mm	Inch	mm	lbs	kg
2	50	1.75	44.5	4.13	104.8	4.38	111.1	4.25	108	1.19	30	3.5	1.6
2 1/2	65	1.88	47.6	4.88	123.8	5.13	130.2	4.50	114	1.50	38	5.0	2.3
3	80	2.00	50.8	5.38	136.5	5.88	149.2	5.00	127	1.69	43	6.5	2.9
4	100	2.25	57.2	6.88	174.6	7.13	181.0	5.75	146	2.44	62	11.6	5.3
5	125	2.50	63.5	7.75	196.9	8.50	215.9	6.50	165	3.38	86	15.5	7.0
6	150	2.75	69.9	8.75	222.3	9.88	250.8	7.25	184	4.25	108	20.6	9.4
8	200	2.88	73.0	11.00	279.4	12.13	308.0	8.25	210	5.38	136	33.0	15.0
10	250	3.13	79.4	13.38	339.7	14.25	362.0	9.63	244	7.00	178	48.5	22.0
12	300	3.38	85.7	16.13	409.6	16.63	422.3	10.75	273	8.13	206	72.8	33

GP0210

PART NO.	Ø"A"	"B"	"C"
GP0210−1	2.376 [60.35]	.626 [15.90]	2.650 [67.31]
GP0210−2	2.626 [66.70]	.626 [15.90]	2.904 [73.76]
GP0210−3	2.876 [73.05]	.751 [19.08]	3.204 [81.38]
SEE NOTE 1 GP0210−4	1.250 [31.75]	N/A	N/A

NOTE:

1. DRIVE SIDE COUPLING HUB ON GP0210−4 TO BE PROVIDED WITH STANDARD PILOT BORES ONLY. THE ½−13 THRU TAPPED SET SCREW HOLE WILL BE ADDED WHEN THE HUB IS FINAL MACHINED. NYLOK SOCKET HEAD SET SCREW IS TO BE SHIPPED LOOSE ALONG WITH COUPLING.
2. COUPLING NOT TO BE USED WITH SLEEVE BEARING DRIVE MOTORS.

PARTS LIST

QUANTITY	PART NAME	PART NO.	DESCRIPTION OR DRAWING NO.	ITEM NO.	MAT'L. SPEC.
1	COUPLING	GP0210−1		1	
1	COUPLING	GP0210−2		2	
1	COUPLING	GP0210−3		3	
1	COUPLING	GP0210−4	SEE NOTE 1	4	

SPARE PARTS

QUANTITY	PART NAME	PART NO.	DESCRIPTION OR DRAWING NO.	ITEM NO.	MAT'L. SPEC.
1	COUPLING BUFFER	GP0210−50		50	
2	SCREW, SET SOC HD 1/2−13 X 1.00 LG NYLOCK	GP0210−51		51	

MISALIGNMENT	LIMITS
PARALLEL OFFSET (IN./mm)	0.020 [0.51]
AXIAL (IN./mm)	±0.060 [±1.52]
ANGULAR (DEG.)	1.2°

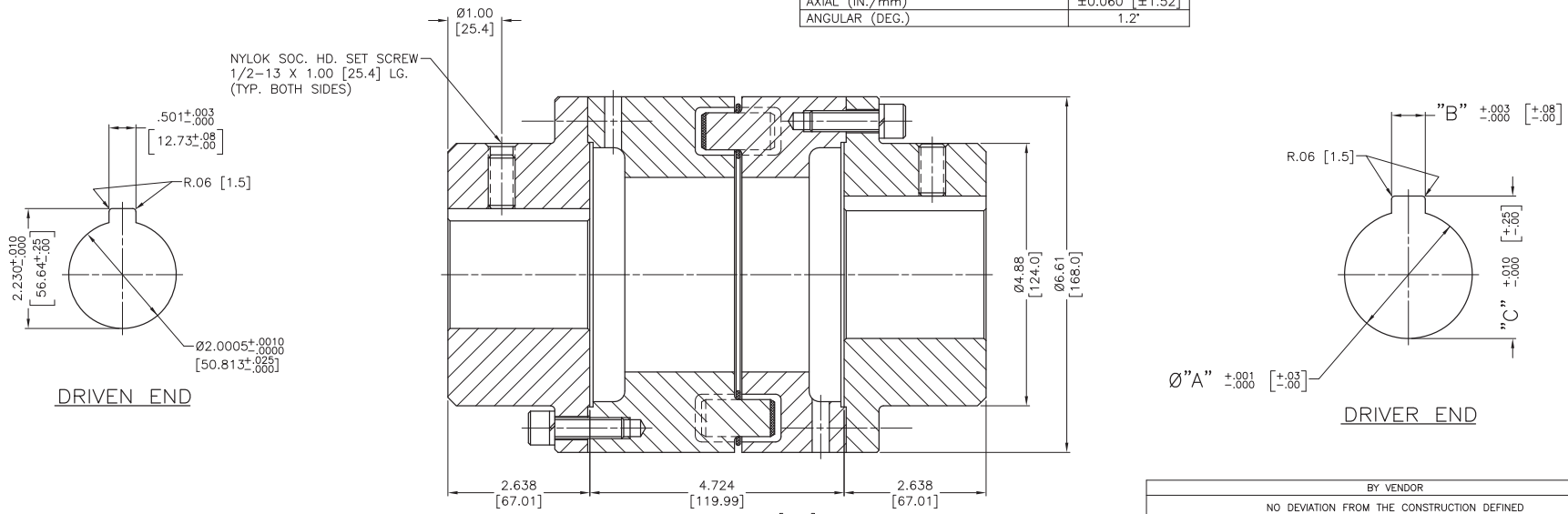

SET SHAFT GAP TO 5.00 [127].
TIGHTEN FASTNERS TO 28 FT−LBS (BOTH ENDS)

SPECIFICATIONS:

MATERIAL:
FLANGE & HUB: GREY CAST IRON
BUFFER MATERIAL: PERBUNAN
BUFFER HARDNESS: 85 STANDARD SHORE
SCREWS & LOCKWASHERS: STEEL

MAX. RPM: 4000 RPM
HORSEPOWER RATING: 690 @ 3600 RPM
TORQUE RATING: 19,920 IN./LBS.
TORSIONAL STIFFNESS:
218,580 LB−IN/RAD BASED ON 1/3 HUB FIT
TEMPERATURE RANGE:
−13°F TO 186°F CONTINUOUS DUTY
WEIGHT: 62 LBS.
WR^2 = 2.05 LB/FT²

BY VENDOR

NO DEVIATION FROM THE CONSTRUCTION DEFINED WILL BE MADE WITHOUT WRITTEN NOTIFICATION TO FS−ELLIOTT COMPANY

APPROVED BY _____ DATE _____

UNLESS OTHERWISE NOTED DIMENSIONS ARE IN INCHES
DIMENSIONS SHOWN IN BRACKETS [] ARE IN MILLIMETERS

DR. C.GOUNDER
CK. C.GOUNDER
DES.AP. M.TURSKY
ENG.AP. M.TURSKY
MFG.AP. N/R
CAST.AP. N/R
DATE 21MAR2003
S.O. FUTURE
SCALE FULL
ASSY.
SIMILAR TO
PROCESS SPEC

COUPLING

USED ON: P300, Q/QR

THE CONTENTS OF THIS DOCUMENT ARE THE EXCLUSIVE PROPERTY OF FS−ELLIOTT CO., LLC AND CONTAIN CONFIDENTIAL AND PROPRIETARY INFORMATION. IT MAY NOT BE COPIED, DISTRIBUTED OR DUPLICATED WITHOUT THE PRIOR WRITTEN CONSENT OF FS−ELLIOTT CO., LLC. THIS INFORMATION IS PROVIDED SUBJECT TO THE EXPRESS CONDITION THAT IT SHALL NOT BE USED, DISTRIBUTED OR DUPLICATED, IN WHOLE OR IN PART, OR USED FOR THE BENEFIT OF ANYONE OTHER THAN FS−ELLIOTT CO., LLC. FS−ELLIOTT CO., LLC HEREBY RESERVES ANY AND ALL RIGHTS AVAILABLE TO IT UNDER ANY AND ALL APPLICABLE LAWS, INCLUDING BUT NOT LIMITED TO ANY RIGHTS INCLUDED IN ANY CONFIDENTIALITY AGREEMENT BETWEEN THE RECIPIENT OF THIS INFORMATION AND FS−ELLIOTT CO., LLC.

ASSOCIATE PLANT IDENTIFICATION

SHEET 1 OF 1

FS ELLIOTT

© 2014 FS−ELLIOTT COMPANY, LLC.

CAD GENERATED DRAWING

GP0210 REV 7

SUPERSEDED BY

SUPERSEDES

CAD GENERATED DRAWING

Δ	CHANGE DESCRIPTION	AP	ZONE
1	ECN05−75 ADDED 1" LG. TO NYLOK SOC HD. SET SCREW NOTE. ADDED METRIC DIM'S. D.SIPES 05−06−04		
2	ECN05−127 DRIVER END DIM'S. WERE ADDED ITEM #2. DELETED TOL. BLOCK. FIRST USED ON: WAS "Q" FRAME COMPRESSOR. D.SIPES 03−14−05		
3	ECN05−123 FIRST USED ON: IN TITLE BLOCK WAS Q, QR, & QR2 FRAME COMPR.. ITEM 1 PART NUMBER WAS JP0445−1, ITEM 2 PART NUMBER WAS JP0445−2, & ITEM 3 PART NUMBER WAS JP0445−50. D.SIPES 05−06−05		
4	ECN05−343 ADDED VENDOR PART NO. TO GP0210−2. CGOUNDER 10−27−2005		
4A	ADDED IT. #3. PART NO. GP0210−3 T.EWING 03−2−2006		
4B	ADDED IT. #4. PART NO. GP0210−4, AND NOTE 1. T.EWING 06−21−2006		
5	ECN06−237 IT. #1 IN PARTS LIST WAS "GH 188/120", IT. #2 WAS "FG068H04−001", IT. #3 AND #4 WAS "J−125". T.EWING 08−25−2006		
5A	NO MFG CHANGES REQ'D ADDED ITEM 5 & SETM TO DRIVEN END HUB SCREW. NOTE 1 WAS "COUPLING GP0210−4 TO BE PROVIDED WITH STANDARD BORES ONLY." UPDATED DIM'S TO CURRENT STANDARD. M.BELL 07−16−10		
6	ECN12−654 NOTE 1 READ "COUPLING GP0210−4 TO BE PROVIDED WITH STANDARD PILOT BORES ONLY. THE 1/2−13 TAPPED SET SCREW HOLE IS TO BE ADDED WHEN THE HUB IS FINAL MACHINED. T.HILL 12/20/12		
6A	NO MFG CHANGES REQ'D ADDED NOTE "TIGHTEN FASTNERS TO 28 FT−LBS (BOTH ENDS)". T.HILL 10/9/13		
6B	NO MFG CHANGES REQ'D ADDED NOTE "SET...5.00[127]." ADDED NOTE 2. C.REESE 6/6/14		
7	SEE ECN16−734 FOR DETAILS C.REESE 4/6/16		

SPECIFICATIONS:
PERFORMANCE:
ACCURACY ≤0.5% OF FULL SCALE TOTAL OF LINEARITY, HYSTERESIS AND REPEATABILITY
ZERO SHIFT <}0.015% OF MEASURING RANGE / °C
SPAN SHIFT <}0.015% OF MEASURING RANGE / °C
OVERPRESSURE 3 TIMES FULL SCALE -14.5 TO 30 PSIG
2.5 TIMES FULL SCALE 60 TO 8700 PSIG UP TO A MAXIMUM OF 13,050 PSIG
ENVIRONMENTAL:
AMBIENT TEMPERATURE -40 TO +85°C (-40 TO +185°F)
MEDIUM TEMPERATURE -40°C TO +150°C (-40°F TO +302°F)
ENCLOSURE RATING IP67
HOUSING MATERIAL STAINLESS STEEL 1.430 (AISI 303) / PBT
SHOCK RESISTANCE 75 G, 11 MS PER IEC 68-2-27
VIBRATION RESISTANCE 20 G, 15 MM PER IEC 68-2-6
WETTED PARTS AISI 303 STAINLESS STEEL (CONNECTION), AL203
CERAMIC (MEASURING CELL), VITON (SEAL)
ELECTRICAL DATA:
CURRENT CONSUMPTION ≤20 MA
DYNAMIC RESPONSE <2 MS
SHORT-CIRCUIT PROTECTION YES
REVERSE POLARITY PROTECTION YES
MATING CORDSET RK 4T-*/S618 (* LENGTH IN METERS)
OUTPUT 4-20 MA LOOP POWERED . . . . 0-10 V
VOLTAGE 8-33 VDC . . . . . 11.4-33 VDC
LOAD
4-20 MA: ≤ = OHM
0-10 V: >10 K Ω¶/ <100 NF

COMPLIANCE:
IP67

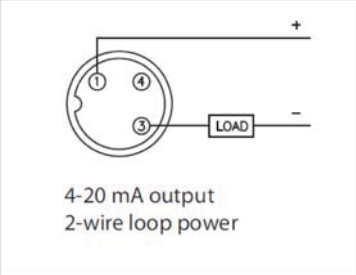

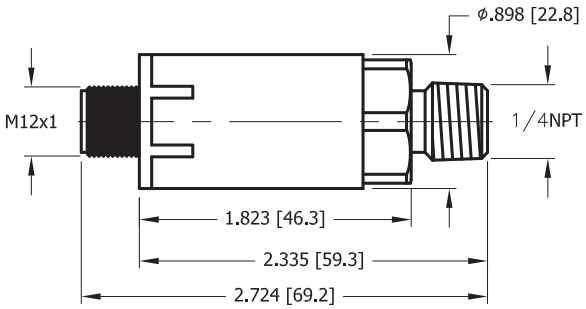

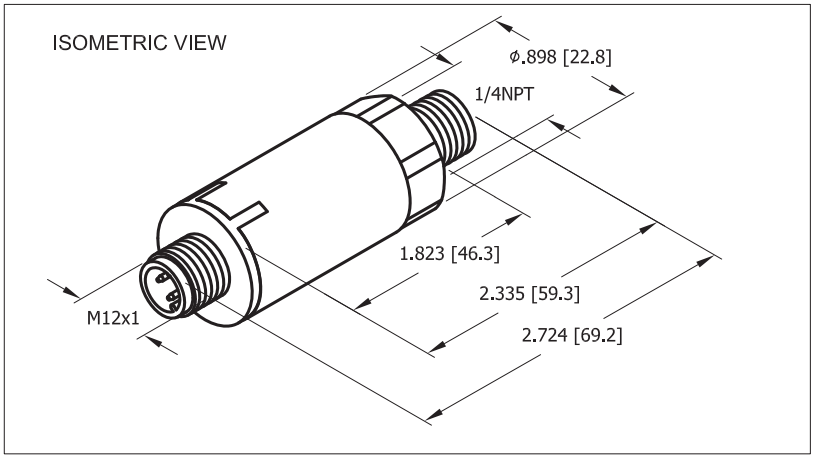

ITEM	DESCRIPTION		FS-ELLIOTT PART NUMBER
1	PRESSURE TRANSMITTER, 0 - 200 PSIG		P8650A521 ←
2	PRESSURE TRANSMITTER, 0 - 100 PSIG		P8650A522
3	PRESSURE TRANSMITTER, 0 - 15 PSIG		P8650A523
4	PRESSURE TRANSMITTER, 0 - 60 PSIG		P8650A524

REVISION HISTORY

REV	CHANGE DESCRIPTION	AP
1	ADD ITEM 4 SEE ECN15-171 MCGREGOR 4/1/15	

TRANSMITTER
PRESSURE
GAUGE

DRAFTER: MCGREGOR
CHECKER: M.ZOWACKI
ENG. APPROVAL: E.KLIMEK
DATE: 09/14/2012
SCALE: N.T.S.
SHEET: 1 OF 1

THIS DRAWING AND ALL INFORMATION SHOWN THEREON IS THE EXCLUSIVE PROPERTY OF FS-ELLIOTT COMPANY, LLC. AND IS PROVIDED SUBJECT TO THE EXPRESS CONDITION THAT THE DRAWING IS NOT TO BE REPRODUCED IN WHOLE OR IN PART, OR USED FOR THE BENEFIT OF ANYONE OTHER THAN FS-ELLIOTT COMPANY, LLC.; AND NO INFORMATION SHOWN IN THIS DRAWING MAY BE DISCLOSED OR USED IN ANY WAY.

© 2012 FS-ELLIOTT COMPANY, LLC.

FS ELLIOTT®

PART NO.: P8650A52

SPECIFICATIONS:
CONTACT CARRIER MATERIAL: NYLON OR TPU
MOLDED HEAD MATERIAL/COLOR: TPU/BLACK (RK 4.4T-*-RS 4.4T/S653)
CONTACT MATERIAL/PLATING: BRASS/GOLD
COUPLING NUT MATERIAL/PLATING: BRASS/NICKEL
RATED CURRENT [A]: 4.0 A
RATED VOLTAGE [V]: 250 V
OUTER CABLE JACKET MATERIAL/COLOR: PVC/GRAY
CONDUCTOR INSULATION MATERIAL: PVC
NUMBER OF CONDUCTORS [AWG]: 4x22 AWG
TEMPERATURE RANGE: -40°C to +105°C (-40°F to +221°F)
PROTECTION CLASS: NEMA 1,3,4,6P AND IEC IP69K

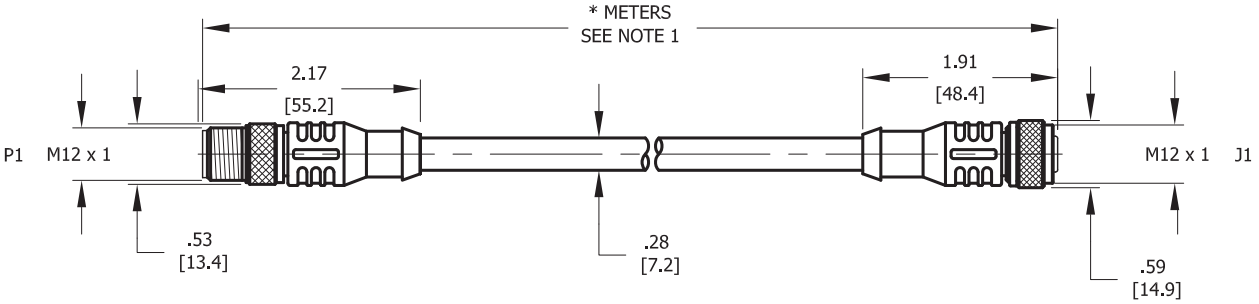

RKC 4.5T-*-RSC-4.5T/CS13641

NOTE: REPLACE ASTERISK (*) WITH LENGTH NEEDED WHEN ORDERING.

MALE END VIEW	FEMALE END VIEW
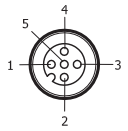	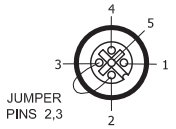
1 = BLUE 2 = N/C 3 = N/C 4 = BROWN 5 = DRAIN	1 = BLUE 2 = BROWN 3 = JUMPER TO PIN 2 4 = N/C 5 = DRAIN

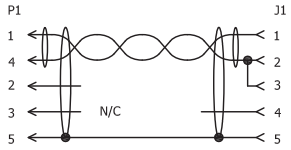

WIRING DIAGRAM

ITEM	DESCRIPTION		LENGTH	FS-ELLIOTT PART NUMBER
1	TRANSMITTER PATCH CABLE		10 METERS	P8650A611
2	TRANSMITTER PATCH CABLE		7.5 METERS	P8650A612
3	TRANSMITTER PATCH CABLE		5 METERS	P8650A613
4	TRANSMITTER PATCH CABLE		2 METERS	P8650A614
5	TRANSMITTER PATCH CABLE		1 METERS	P8650A615
6	TRANSMITTER PATCH CABLE		3 METERS	P8650A616
7	TRANSMITTER PATCH CABLE		50 METERS	P8650A617
8	TRANSMITTER PATCH CABLE		75 METERS	P8650A618
9	TRANSMITTER PATCH CABLE		100 METERS	P8650A619

REVISION HISTORY

REV	CHANGE DESCRIPTION	AP
1	CORRECT VENDOR P/N'S MCGREGOR 10/9/13	
2	ADD ITEM 6 MCGREGOR 1/14/14	
3	ADD ITEM 7, 8, & 9 MCGREGOR 8/4/14	
4	CORRECT WIRE COLORS MCGREGOR 12/15/14	

CABLE
TRANSMITTER

DRAFTER: MCGREGOR
CHECKER: M.ZOWACKI
ENG. APPROVAL: E.KLIMEK
DATE: 09/18/2012
SCALE: N.T.S.
SHEET: 1 OF 1

THIS DRAWING AND ALL INFORMATION SHOWN THEREON IS THE EXCLUSIVE PROPERTY OF FS-ELLIOTT COMPANY, LLC. AND IS PROVIDED SUBJECT TO THE EXPRESS CONDITION THAT THE DRAWING IS NOT TO BE REPRODUCED IN WHOLE OR IN PART, OR USED FOR THE BENEFIT OF ANYONE OTHER THAN FS-ELLIOTT COMPANY, LLC.; AND NO INFORMATION SHOWN IN THIS DRAWING MAY BE DISCLOSED OR USED IN ANY WAY.

© 2014 FS-ELLIOTT COMPANY, LLC.

FS ELLIOTT®

PART NO.: P8650A61

DWG NO. EN-MP0701-0B

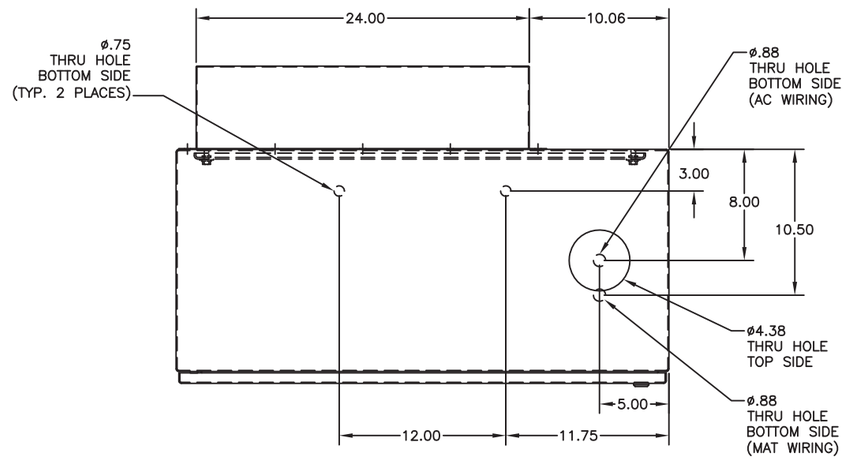

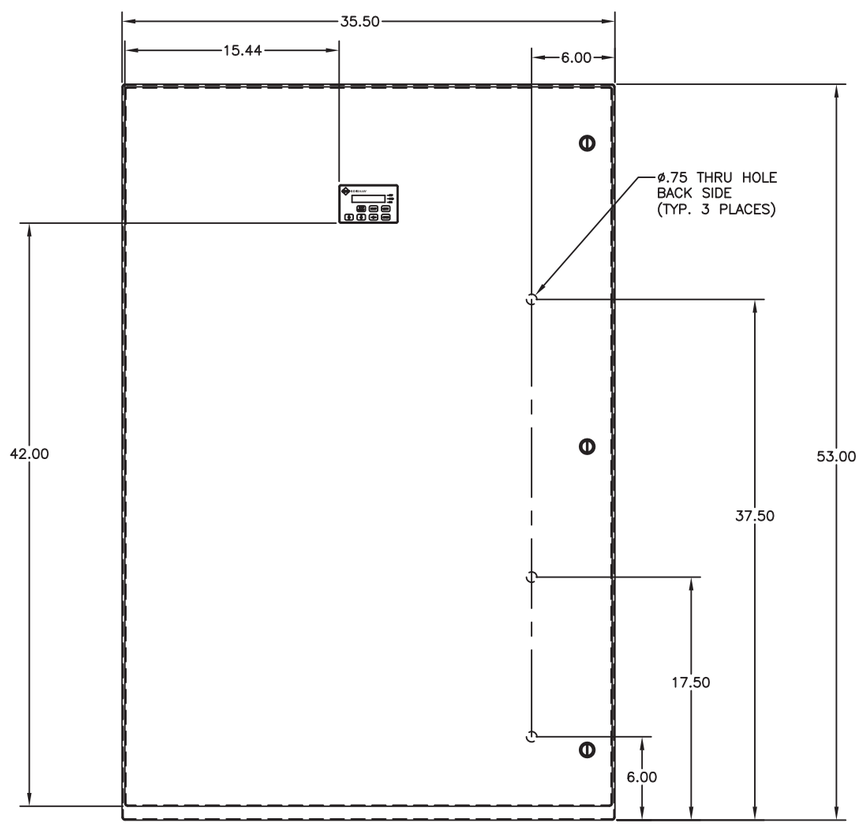

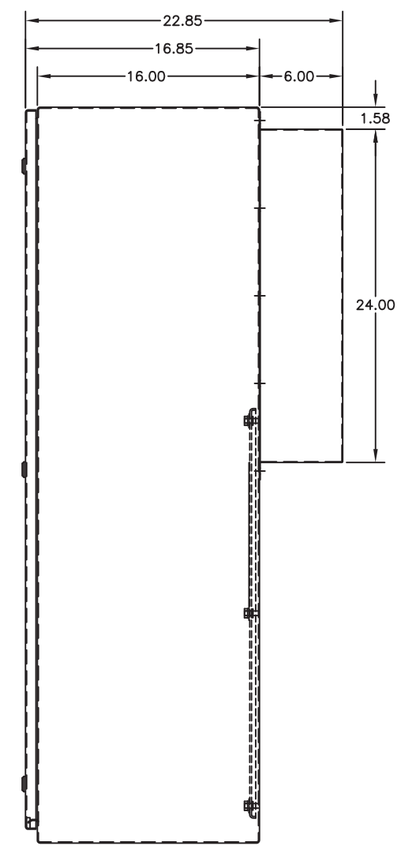

REVISIONS	DWG	THIRD ANGLE PROJECTION	UNLESS OTHERWISE SPECIFIED ALL DIMENSIONS IN INCHES INTERPRET DRAWING PER ASME Y14.5M-1994	SIGNATURES		DATE	TITLE: FS-ELLIOTT STARTER PANEL ENCLOSURE OUTLINE HP, VAC SOLID STATE STARTER	BENSHAW 1659 E. SUTTER RD. GLENSHAW, PA. 15116 WALLACE INDUSTRIAL PARK RR#1 LISTOWEL ONTARIO N4W3G6
	SCALE	THIS DRAWING AND ALL INFORMATION CONTAINED HEREIN, IS THE PROPERTY OF BENSHAW INC., AND MAY NOT BE REPRODUCED, OR DIVULGED TO UNAUTHORIZED PERSONS WITHOUT THE EXPRESS WRITTEN CONSENT OF BENSHAW INC. IT IS PROVIDED SOLELY FOR THE CONVENIENCE OF THE USER AND SHALL BE RETURNED UPON REQUEST.	TOLERANCES: .XX ± .02 .XXX ± .005 ANGLES ± 1°	DRWN.	SF	6/18/08		SIZE D DWG NO. EN-MP0701-0B REV 0
	DO NOT		MATERIAL: 14 GA. CS	CHKD.	JSR	6/18/08		SCALE: NTS SHEET 1 OF 5
			FINISH: ANSI 61 GRAY	ENG.	JSR	6/18/08		
				MFG.				

DWG NO. EN-MP0701-0B

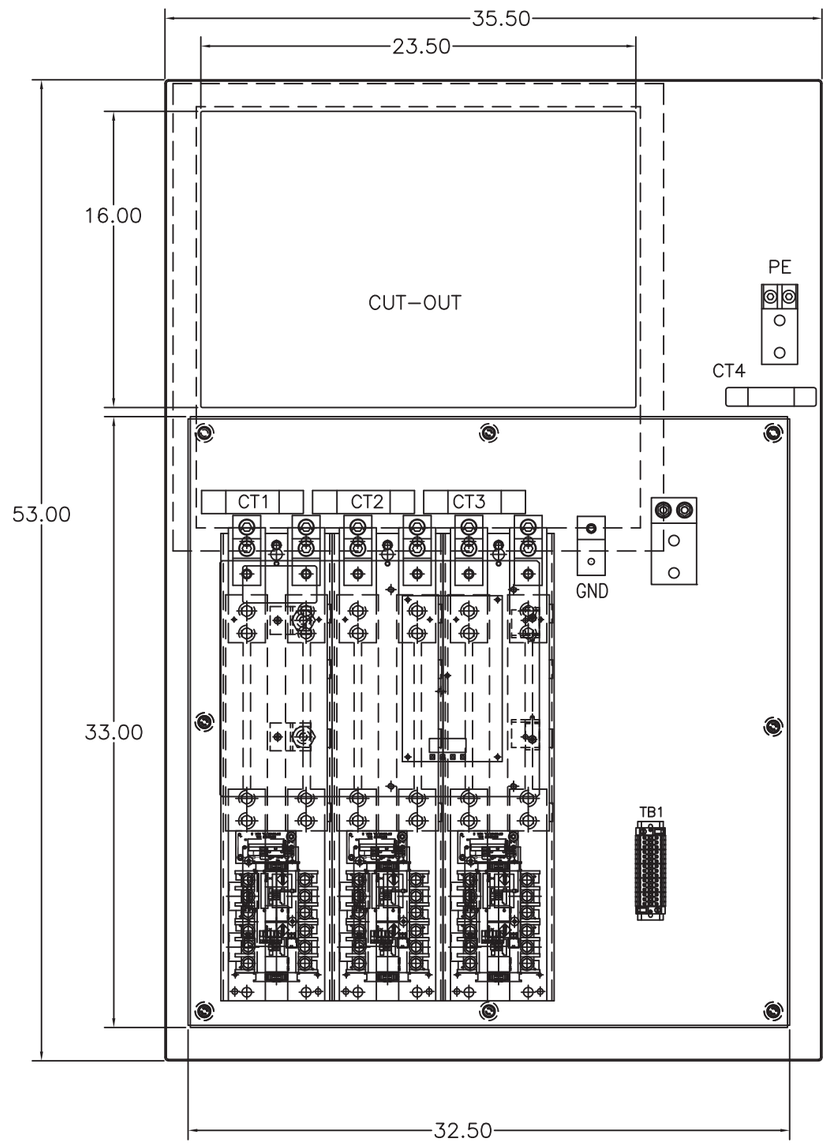

REVISIONS			
DO NOT SCALE DWG	THIRD ANGLE PROJECTION		
	THIS DRAWING AND ALL INFORMATION CONTAINED HEREIN, IS THE PROPERTY OF BENSHAW INC., AND MAY NOT BE REPRODUCED, OR DIVULGED TO UNAUTHORIZED PERSONS WITHOUT THE EXPRESS WRITTEN CONSENT OF BENSHAW INC. IT IS PROVIDED SOLELY FOR THE CONVENIENCE OF THE USER AND SHALL BE RETURNED UPON REQUEST.		

UNLESS OTHERWISE SPECIFIED
ALL DIMENSIONS IN INCHES
INTERPRET DRAWING PER ASME Y14.5M-1994
TOLERANCES: .XX ± .02
.XXX ± .005
ANGLES ± 1°
MATERIAL:
FINISH:

SIGNATURES		DATE
DRWN.	SF	6/18/08
CHKD.	JSR	6/18/08
ENG.	JSR	6/18/08
MFG.		

TITLE:
FS-ELLIOTT

STARTER PANEL
PANEL LAYOUT
HP, VAC
SOLID STATE
STARTER

BENSHAW
1659 E. SUTTER RD. GLENSHAW, PA. 15116
WALLACE INDUSTRIAL PARK RR#1 LISTOWEL ONTARIO N4W3G6

SIZE	DWG NO.	REV
D	EN-MP0701-0B	0

SCALE: NTS SHEET 2 OF 5

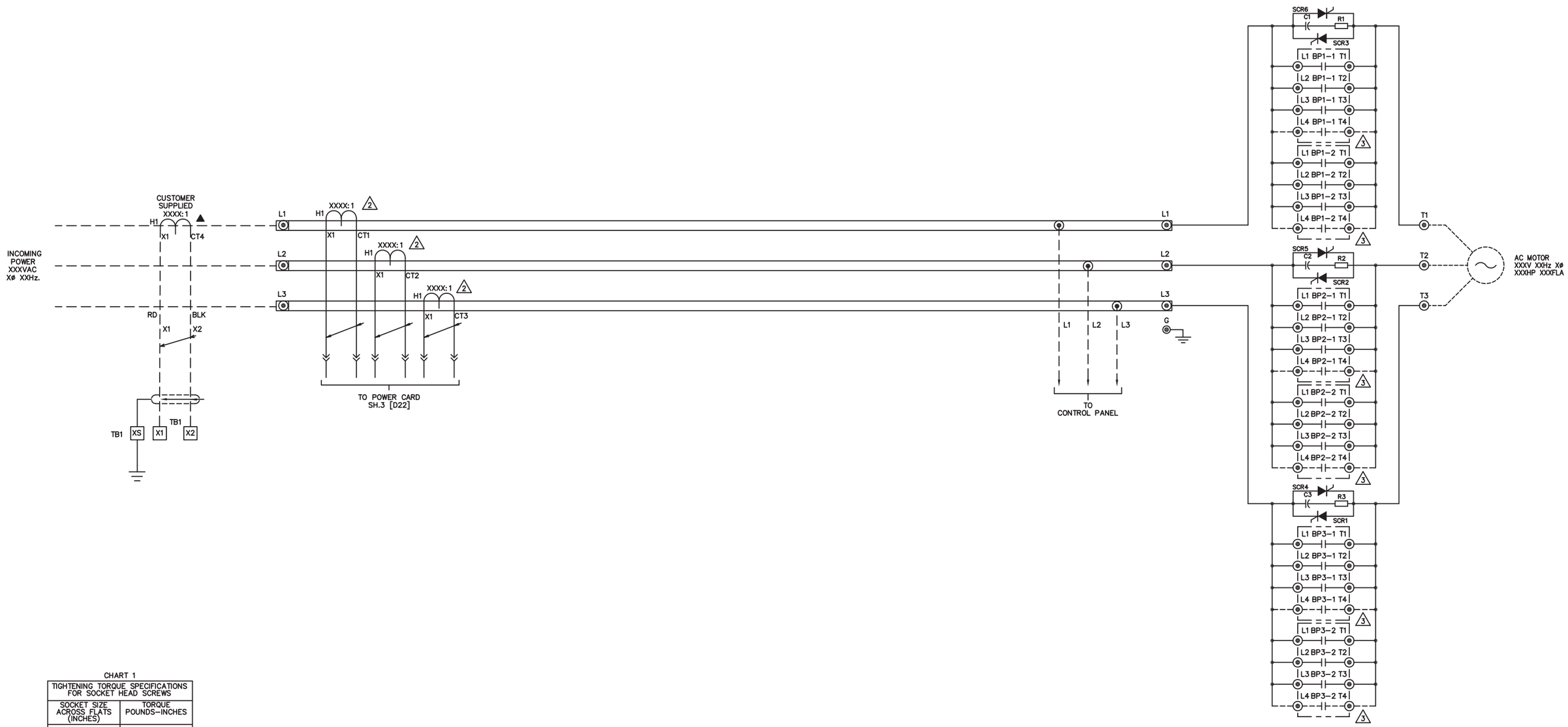

CHART 1

TIGHTENING TORQUE SPECIFICATIONS FOR SOCKET HEAD SCREWS	
SOCKET SIZE ACROSS FLATS (INCHES)	TORQUE POUNDS-INCHES
1/4	200
5/16	275
3/8	375
1/2	500

1. SELECT EITHER THREE OR TWO WIRE CONTROL.
2. CT RATIO FOR 362-477A UNITS IS 2640:1.
   CT RATIO FOR 478-720A UNITS IS 5760:1.
   REFER TO INSTRUCTION MANUAL FOR BURDEN SWITCH SETTINGS (S6).
3. L4/T4 CONTACTOR POLE IS ONLY ON 720A UNITS
4. JP3: INSTALLED = CURRENT, REMOVED = VOLTAGE
   JP1: INSTALLED = VOLTAGE, REMOVED = CURRENT
5. TIGHTEN POWER LUG FIELD WIRING CONNECTIONS TO CHART 1 SPECIFICATIONS. IF BREAKER IS SUPPLIED ON LINE SIDE OF STACK USE TORQUE VALUES ON BREAKER.
6. FOR GROUND STUD TIGHTENING TORQUE SPECIFICATION SEE CHART 1.

STANDARD LEGEND

- WIRE NODE SYMBOL MAY HAVE TERMINAL BLOCK
- BENSHAW SUPPLIED TERMINAL BLOCK
- TERMINAL STRIP
- POWER CONNECTION
- PC BOARD TERMINALS
- TWISTED PAIR
- TWISTED SHIELDED PAIR
- SHIELDED WIRE
- FIELD WIRING

NOTES

1. REPLACE FUSEING WITH SAME OR EQUIVALENT
2. CUSTOMER CONNECTIONS SHALL USE COPPER WIRE ONLY WITH A MINIMUM RISE OF 60°C
3. IF NO DISCONNECT OR CIRCUIT BREAKER IS PROVIDED, A BRANCH CIRCUIT PROTECTIVE DEVICE MUST BE USED
4. ALL WIRING (CONTROL & POWER) SHALL HAVE LABELS OR WIRING NUMBERS, AS SHOWN ON THIS DRAWING.
5. DUAL TB-1 TERMINALS ARE COMMON

REVISIONS

DO NOT SCALE DWG

THIRD ANGLE PROJECTION

THIS DRAWING AND ALL INFORMATION CONTAINED HEREIN, IS THE PROPERTY OF BENSHAW INC., AND MAY NOT BE REPRODUCED, OR DIVULGED TO UNAUTHORIZED PERSONS WITHOUT THE EXPRESS WRITTEN CONSENT OF BENSHAW INC. IT IS PROVIDED SOLELY FOR THE CONVENIENCE OF THE USER AND SHALL BE RETURNED UPON REQUEST.

UNLESS OTHERWISE SPECIFIED
ALL DIMENSIONS IN INCHES
INTERPRET DRAWING PER ASME Y14.5M-1994
TOLERANCES: .XX ± .02
.XXX ± .005
ANGLES ± 1°
MATERIAL:
FINISH:

SIGNATURES		DATE
DRWN.	SF	6/18/08
CHKD.	JSR	6/18/08
ENG.	JSR	6/18/08
MFG.		

TITLE:
FS-ELLIOTT
STARTER PANEL
POWER SCHEMATIC
HP, VAC
SOLID STATE
STARTER

BENSHAW
1659 E. SUTTER RD. GLENSHAW, PA. 15116
WALLACE INDUSTRIAL PARK RR#1 LISTOWEL ONTARIO N4W3G5

SIZE D | DWG NO. SCH-MP0701-0B | REV 0
SCALE: NONE | SHEET 3 OF 5

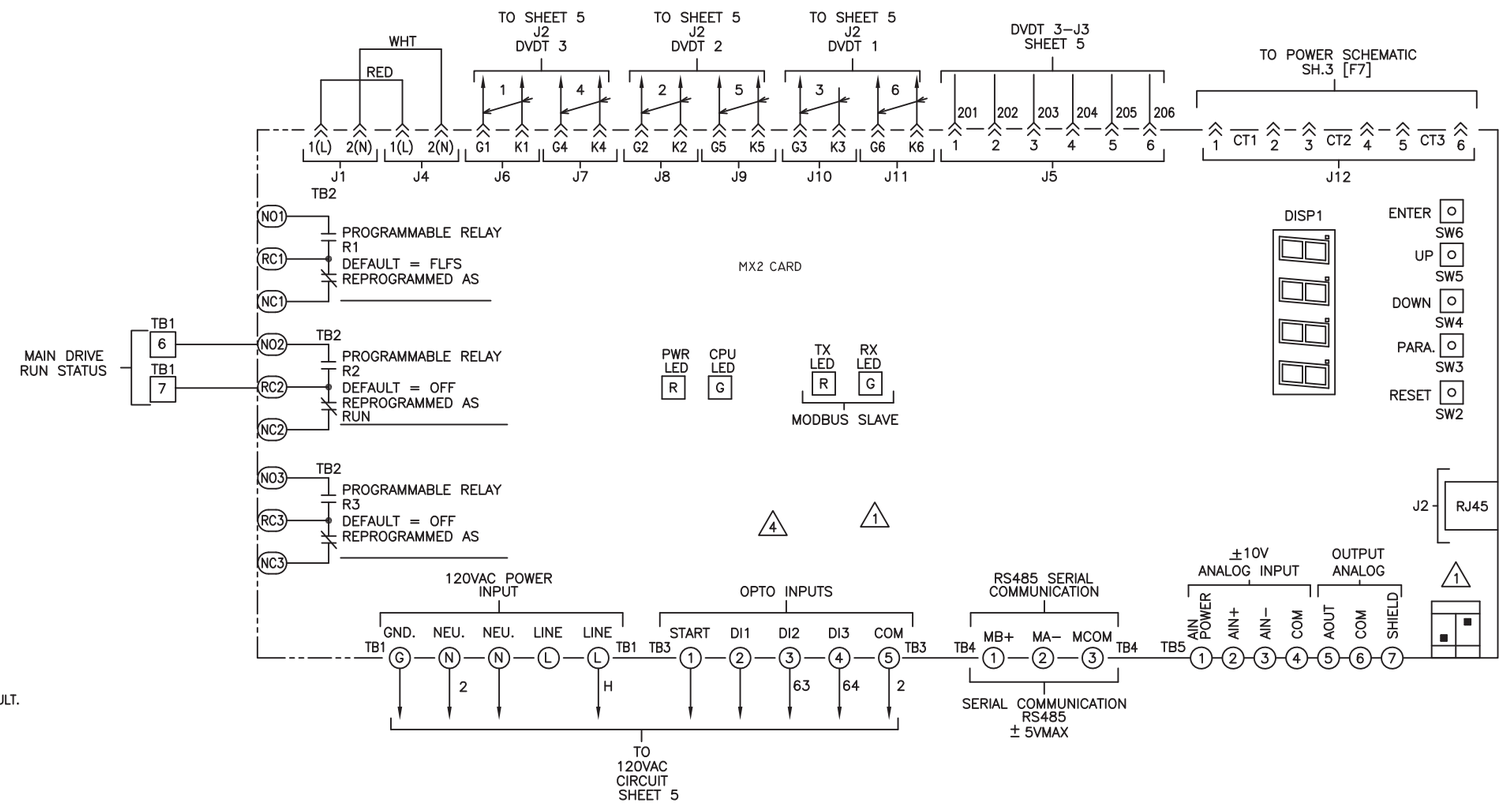

CHART 1

TIGHTENING TORQUE SPECIFICATIONS FOR SOCKET HEAD SCREWS	
SOCKET SIZE ACROSS FLATS (INCHES)	TORQUE POUNDS–INCHES
1/4	200
5/16	275
3/8	375
1/2	500

NOTES

1. LED STATUS WITH POWER APPLIED AND PRIOR TO RUN COMMAND. "ON" "OFF"
2. FOR BURDEN SWITCH SETTING SEE REDISTART SOLID STATE STARTER HARDWARE MANUAL (890023–02–00)
3. R1 RELAY SHOWN IN DE–ENERGIZED STATE. R1 CONTACT AT TBP1 NO1 & RC1 WILL OPEN AND R1 CONTACT AT TBP1 RC1 & NC1 WILL CLOSE ON SYSTEM FAULT. R1 RELAY INDICATES FAULT ON POWER–UP UNTIL STARTER SELF–CHECK IS COMPLETE.
4. START/STOP PUSHBUTTONS ARE DISABLED
5. TIGHTEN POWER LUG FIELD WIRING CONNECTIONS TO CHART 1. SPECIFICATIONS. IF BREAKER IS SUPPLIED LINE SIDE OF THE STACK, USE TORQUE VALUES ON THE BREAKER.
6. FOR GROUND STUD TIGHTENING TORQUE SPECIFICATION SEE CHART 1.
7. R2 RELAY SHOWN IN DE–ENERGIZED STATE. R2 CONTACT AT TB2 NO2 & RC2 WILL CLOSE AND R2 CONTACT AT TB2 RC2 & NC2 WILL OPEN WHEN A SHORTED SCR IS DETECTED.
8. R3 RELAY SHOWN IN DE–ENERGIZED STATE. R3 CONTACT AT TB2 NO3 & RC3 WILL CLOSE AND R3 CONTACT AT TB2 RC3 & NC3 WILL OPEN WHEN STARTER IS UP TO SPEED (FULL VOLTAGE).
9. REPLACE CONTROL POWER FUSE WITH SAME OR EQUIVALENT.

REVISIONS | DO NOT SCALE DWG

THIRD ANGLE PROJECTION

THIS DRAWING AND ALL INFORMATION CONTAINED HEREIN, IS THE PROPERTY OF BENSHAW INC., AND MAY NOT BE REPRODUCED, OR DIVULGED TO UNAUTHORIZED PERSONS WITHOUT THE EXPRESS WRITTEN CONSENT OF BENSHAW INC. IT IS PROVIDED SOLELY FOR THE CONVENIENCE OF THE USER AND SHALL BE RETURNED UPON REQUEST.

UNLESS OTHERWISE SPECIFIED ALL DIMENSIONS IN INCHES INTERPRET DRAWING PER ASME Y14.5M–1994
TOLERANCES: .XX ± .02 .XXX ± .005 ANGLES ± 1°
MATERIAL:
FINISH:

SIGNATURES		DATE
DRWN.	SF	6/18/08
CHKD.	JSR	6/18/08
ENG.	JSR	6/18/08
MFG.		

TITLE:
FS–ELLIOTT
STARTER PANEL
CONTROL SCHEMATIC
HP, VAC
SOLID STATE
STARTER

BENSHAW
1659 E. SUTTER RD. GLENSHAW, PA. 15116
WALLACE INDUSTRIAL PARK RR#1 LISTOWEL ONTARIO N4W3G5

SIZE D | DWG NO. SCH–MP0701–0B | REV 0
SCALE: 1:1 | SHEET 4 OF 5

DWG NO SCH-MP0701-0B

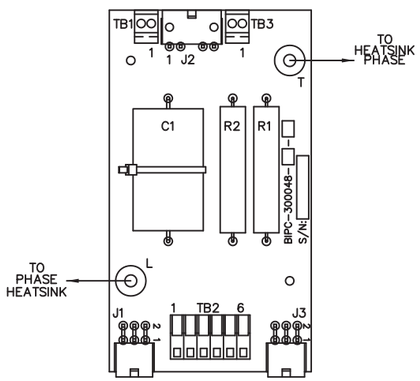

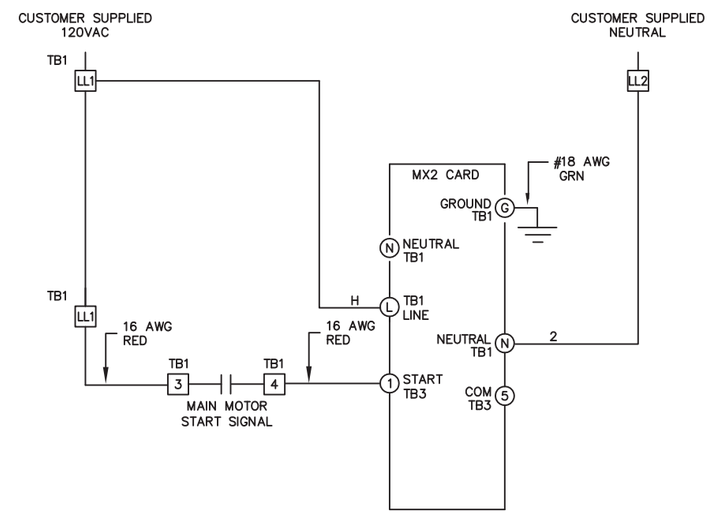

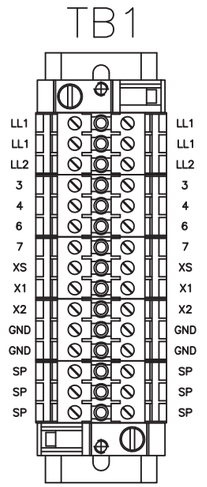

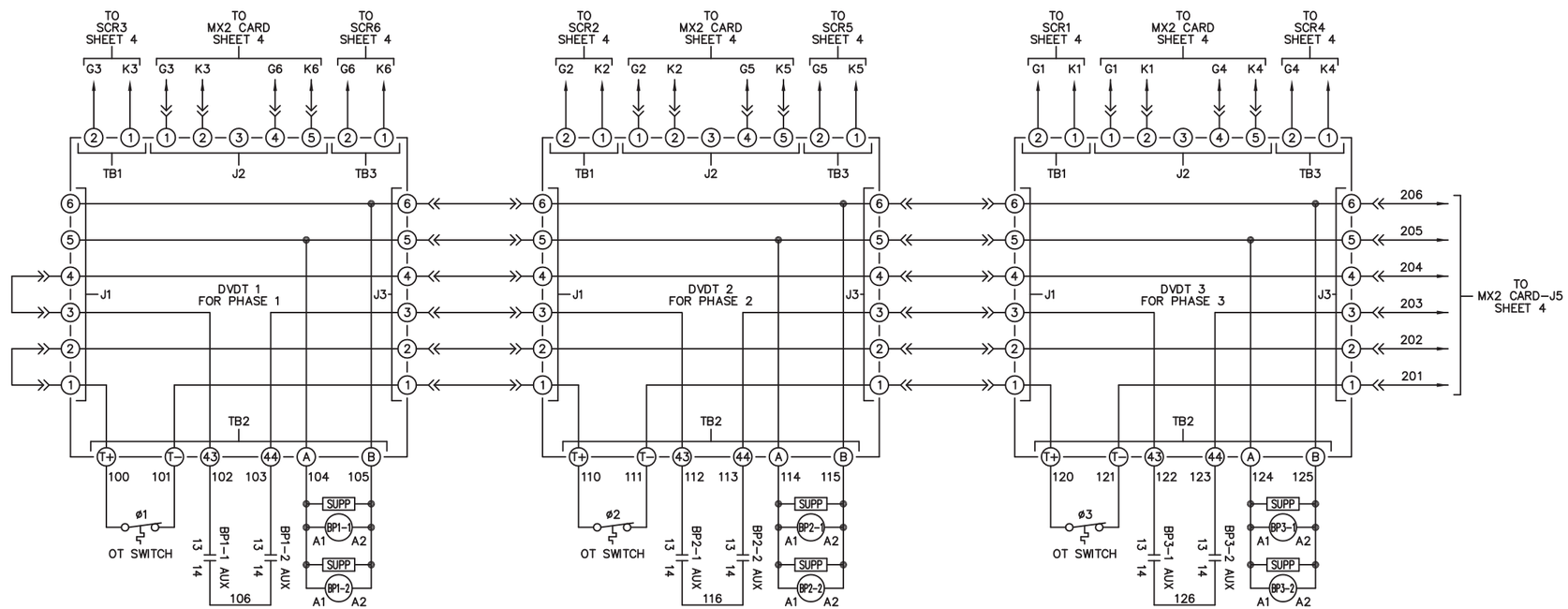

REVISIONS	DWG	DO NOT SCALE

THIRD ANGLE PROJECTION

THIS DRAWING AND ALL INFORMATION CONTAINED HEREIN, IS THE PROPERTY OF BENSHAW INC., AND MAY NOT BE REPRODUCED, OR DIVULGED TO UNAUTHORIZED PERSONS WITHOUT THE EXPRESS WRITTEN CONSENT OF BENSHAW INC. IT IS PROVIDED SOLELY FOR THE CONVENIENCE OF THE USER AND SHALL BE RETURNED UPON REQUEST.

UNLESS OTHERWISE SPECIFIED
ALL DIMENSIONS IN INCHES
INTERPRET DRAWING PER ASME Y14.5M-1994
TOLERANCES: .XX ± .02
.XXX ± .005
ANGLES ± 1°
MATERIAL:
FINISH:

SIGNATURES		DATE
DRWN.	SF	6/18/08
CHKD.	JSR	6/18/08
ENG.	JSR	6/18/08
MFG.		

TITLE:
FS-ELLIOTT
STARTER PANEL
CONTROL SCHEMATIC
HP, VAC
SOLID STATE
STARTER

BENSHAW
1659 E. SUTTER RD. GLENSHAW, PA. 15116
WALLACE INDUSTRIAL PARK RR#1 LISTOWEL ONTARIO N4W3G6

SIZE	DWG NO.	REV
D	SCH-MP0701-0B	0

SCALE: 1:1 SHEET 5 OF 5

RediStart™

Solid State Starter

MX² Control

RB2, RC2, RX2E Models

User Manual

890034-01-02

August 2008

Software Version: 810023-01-08
Hardware Version: 300055-01-05

© 2008 Benshaw Inc.

Benshaw retains the right to change specifications and illustrations in text without prior notification. The contents of this document may not be copied without the explicit permission of Benshaw.

CURTISS WRIGHT Flow Control Company
BENSHAW

Important Reader Notice

Congratulations on the purchase of your new Benshaw RediStart MX^2 Solid State Starter. This manual contains the information to install and program the MX^2 Solid State Starter. The MX^2 is a standard version solid state starter. If you require additional features, please review the expanded feature set of the MX^3 Solid State Starter on page 5.

This manual may not cover all of the applications of the RediStart MX^2. Also, it may not provide information on every possible contingency concerning installation, programming, operation, or maintenance specific to the RediStart MX^2 Series Starters.

The content of this manual will not modify any prior agreement, commitment or relationship between the customer and Benshaw. The sales contract contains the entire obligation of Benshaw. The warranty enclosed within the contract between the parties is the only warranty that Benshaw will recognize and any statements contained herein do not create new warranties or modify the existing warranty in any way.

Any electrical or mechanical modifications to Benshaw products without prior written consent of Benshaw will void all warranties and may also void cUL listing or other safety certifications, unauthorized modifications may also result in product damage operation malfunctions or personal injury.

Incorrect handling of the starter may result with an unexpected fault or damage to the starter. For best results on operating the RediStart MX^2 starter, carefully read this manual and all warning labels attached to the starter before installation and operation. Keep this manual on hand for reference.

Do not attempt to install, operate, maintain or inspect the starter until you have thoroughly read this manual and related documents carefully and can use the equipment correctly.
Do not use the starter until you have a full knowledge of the equipment, safety procedures and instructions.
This instruction manual classifies safety instruction levels under "WARNING" and "CAUTION".

Electrical Hazard that could result in injury or death.

Caution that could result in damage to the starter.
Highlight marking an important point in the documentation.

Please follow the instructions of both safety levels as they are important to personal safety.

DANGER

HAZARD OF ELECTRIC SHOCK, EXPLOSION, OR ARC FLASH
Only qualified personnel familiar with low voltage equipment are to perform work described in this set of instructions.
Apply appropriate personal protective equipment (PPE) and follow safe electrical work practices. See NFPA 70E.
Turn off all power before working on or inside equipment.
Use a properly rated voltage sensing device to confirm that the power is off.
Before performing visual inspections, tests, or maintenance on the equipment, disconnect all sources of electric power.
Assume that circuits are live until they have been completely de-energized, tested, and tagged. Pay particular attention to the design of the power system. Consider all sources of power, including the possibility of backfeeding.
Replace all devices, doors, and covers before turning on power to this equipment.

Failure to follow these instructions will result in death or serious injury.

TRADEMARK NOTICE

Benshaw and BENSHAW ADVANCED CONTROLS & DRIVES are registered trademarks of Benshaw Incorporated.
UL is a trademark of Underwriters Laboratories, Incorporated.

Safety Precautions

Electric Shock Prevention

- While power is on or soft starter is running, do not open the front cover. You may get an electrical shock.
- This soft starter contains high voltage which can cause electric shock resulting in personal injury or loss of life.
- Be sure all AC power is removed from the soft starter before servicing.
- Do not connect or disconnect the wires to or from soft starter when power is applied.
- Make sure ground connection is in place.
- Always install the soft starter before wiring. Otherwise, you may get an electrical shock or be injured.
- Operate the switches with dry hands to prevent an electrical shock.
- Risk of Electric Shock - More than one disconnect switch may be required to de-energize the equipment before servicing.

Injury Prevention

- Service only by qualified personnel.
- Make sure power-up restart is off to prevent any unexpected operation of the motor.
- Make certain proper shield installation is in place.
- Apply only the voltage that is specified in this manual to the terminals to prevent damage.

Transportation and Installation

- Use proper lifting gear when carrying products, to prevent injury.
- Make certain that the installation position and materials can withstand the weight of the soft starter. Refer to the installation information in this manual for correct installation.
- If parts are missing, or soft starter is damaged, do not operate the RediStart MX^2.
- Do not stand or rest heavy objects on the soft starter, as damage to the soft starter may result.
- Do not subject the soft starter to impact or dropping.
- Make certain to prevent screws, wire fragments, conductive bodies, oil or other flammable substances from entering the soft starter.

Trial Run

- Check all parameters, and ensure that the application will not be damaged by a sudden start-up.

Emergency Stop

- To prevent the machine and equipment from hazardous conditions if the soft starter fails, provide a safety backup such as an emergency brake.

Disposing of the RediStart MX^2

- Never dispose of electrical components via incineration. Contact your state environmental agency for details on disposal of electrical components and packaging in your area.

Table of Contents

1 INTRODUCTION . . . 2

1.1 Additional MX³ Product Features . . . 5

2 TECHNICAL SPECIFICATIONS . . . 10

2.1 General Information . . . 10

2.2 Electrical Ratings . . . 10
- 2.2.1 Terminal Points and Functions . . . 10
- 2.2.2 Measurements and Accuracies . . . 11
- 2.2.3 List of Motor Protection Features . . . 11
- 2.2.4 Solid State Motor Overload . . . 12
- 2.2.5 CT Ratios . . . 13

2.3 Starter Power Ratings . . . 13
- 2.3.1 Standard Duty (350% for 30 sec) Ratings . . . 14
- 2.3.2 Heavy Duty (500% current for 30 sec) Ratings . . . 15
- 2.3.3 Severe Duty (600% current for 30 sec) Ratings . . . 16
- 2.3.4 Inside Delta Connected Standard Duty (350% for 30 sec) Ratings . . . 17
- 2.3.5 RB2 Power Stack Ratings and Protection Requirements . . . 18
- 2.3.6 Power Stack Input Ratings with Protection Requirements for Separate Bypass . . . 19
- 2.3.7 Power Stack Input Ratings with Protection Requirements for RC No Bypass . . . 20
- 2.3.8 RB2 Starter Control Power Requirements . . . 21
- 2.3.9 RC2 Starter Control Power Requirements . . . 21

2.4 Dimensions . . . 22
- 2.4.1 RB2 Chassis with Integral Bypass . . . 22
- 2.4.2 RC2 Chassis with no Bypass . . . 24

2.5 Environmental Conditions . . . 25

2.6 Altitude Derating . . . 25

2.7 Approvals . . . 26

2.8 Certificate of Compliance . . . 26

3 INSTALLATION . . . 28

3.1 Before You Start . . . 28
- 3.1.1 Inspection . . . 28
- 3.1.2 Installation Precautions . . . 28
- 3.1.3 Safety Precautions . . . 28

3.2 Installation Considerations . . . 29
- 3.2.1 Site Preparation . . . 29
- 3.2.2 EMC Installation Guidelines . . . 29
- 3.2.3 Use of Power Factor Capacitors . . . 29
- 3.2.4 Use of Electro-Mechanical Brakes . . . 29
- 3.2.5 Reversing Contactor . . . 29

3.3 Mounting Considerations . . . 30
- 3.3.1 Bypassed Starters . . . 30
- 3.3.2 Non-Bypassed Starters . . . 30

3.4 Wiring Considerations . . . 31
- 3.4.1 Wiring Practices . . . 31
- 3.4.2 Considerations for Control and Power Wiring . . . 31
- 3.4.3 Considerations for Signal Wiring . . . 31
- 3.4.4 Meggering a Motor . . . 31
- 3.4.5 High Pot Testing . . . 31

3.5 Power and Control drawings for Bypassed and Non Bypassed Power Stacks . . . 32

3.6 Power Wiring . . . 35
3.6.1 Recommended Incoming Line Protection . . . 35
3.6.2 Recommended Wire Gauges . . . 35
3.6.3 Power Wire Connections . . . 35
3.6.4 Motor Lead Length . . . 35
3.6.5 Compression Lugs . . . 36
3.6.6 Torque Requirements for Power Wiring Terminations . . . 37
3.7 Current Transformers . . . 38
3.7.1 CT Mounting . . . 38
3.7.2 CT Polarity . . . 38
3.8 Control Card Layout . . . 39
3.9 Control Wiring . . . 40
3.9.1 Control Power . . . 40
3.9.2 Output Relays . . . 40
3.9.3 Digital Input Wiring Options . . . 41
3.9.4 Analog Input . . . 42
3.9.5 Analog Output . . . 42
3.9.6 SW1 DIP Switch . . . 43
3.10 Remote LCD Keypad/Display . . . 43
3.10.1 Remote Display . . . 43
3.10.2 Display Cutout . . . 44
3.10.3 Installing Display . . . 45

4 KEYPAD OPERATION . . . 48
4.1 Introduction . . . 48
4.2 Standard Keypad and Display . . . 48
4.3 Viewing Parameter Values for the Standard Keypad . . . 48
4.4 Changing Parameter Values . . . 49
4.5 Messages Displayed . . . 49
4.5.1 Power Up . . . 49
4.5.2 Stopped . . . 49
4.5.3 Running . . . 50
4.5.4 Alarm Condition . . . 50
4.5.5 Lockout Condition . . . 50
4.5.6 Faulted Condition . . . 50
4.5.7 Quick Meters . . . 50
4.6 Restoring Factory Parameter Settings . . . 51
4.7 Resetting a Fault . . . 51
4.8 Emergency Overload Reset . . . 51
4.9 2x16 Remote LCD Keypad . . . 52
4.10 Description of the LEDs on the Keypad . . . 52
4.11 Description of the Keys on the Remote LCD Keypad . . . 53
4.12 Jump Code . . . 54
4.13 Alphanumeric Display . . . 54
4.13.1 Parameter Group Screens . . . 55
4.13.2 Meter Pages . . . 56
4.13.3 Fault Log Screen . . . 56
4.13.4 Fault Screen . . . 57
4.13.5 Lockout Screen . . . 57
4.13.6 Alarm Screen . . . 57
4.14 Procedure for Setting Data . . . 58

TABLE OF CONTENTS

5 PARAMETER GROUPS 60

5.1 Introduction 60

5.2 LED and LCD Display Parameters Cross Reference 61

5.3 LED Display Parameters 62

5.4 LCD Display Parameters 66

5.4.1 Quick Start Group 66
5.4.2 Control Function Group 67
5.4.3 Protection Group 68
5.4.4 I/O Group 68
5.4.5 Function Group 70
5.4.6 LCD Fault Group 71
5.4.7 LED Fault Group 71

6 PARAMETER DESCRIPTION 74

6.1 Parameter Descriptions 74

7 THEORY OF OPERATION 132

7.1 Solid State Motor Overload Protection 132

7.1.1 Overview 132
7.1.2 Setting Up The MX^2 Motor Overload 132
7.1.3 Motor Overload Operation 134
7.1.4 Current Imbalance / Negative Sequence Current Compensation 134
7.1.5 Harmonic Compensation 135
7.1.6 Hot / Cold Motor Overload Compensation 135
7.1.7 Separate Starting and Running Motor Overload Settings 136
7.1.8 Motor Cooling While Stopped 137
7.1.9 Motor Cooling While Running 138
7.1.10 Emergency Motor Overload Reset 138

7.2 Motor Service Factor 139

7.3 Acceleration Control 140

7.3.1 Current Ramp Settings, Ramps and Times 140
7.3.2 Programming A Kick Current 141
7.3.3 TruTorque Acceleration Control Settings and Times 141
7.3.4 Power Control Acceleration Settings and Times 143
7.3.5 Open Loop Voltage Ramps and Times 145
7.3.6 Dual Acceleration Ramp Control 147

7.4 Deceleration Control 149

7.4.1 Voltage Control Deceleration 149
7.4.2 TruTorque Deceleration 150

7.5 Braking Controls 151

7.5.1 DC Injection Braking, Standard Duty 152
7.5.2 DC Injection Braking, Heavy Duty 152
7.5.3 Braking Output Relay 152
7.5.4 Stand Alone Overload Relay for emergency ATL (Across The Line) operation 152
7.5.5 DC Injection Brake Wiring Example 153
7.5.6 DC Brake Timing 154
7.5.7 DC Injection Brake Enable and Disable Digital Inputs 155
7.5.8 Use of Optional Hall Effect Current Sensor 155
7.5.9 DC Injection Braking Parameters 156

7.6 Slow Speed Cyclo Converter 156

7.6.1 Operation 156
7.6.2 Slow Speed Cyclo Converter Parameters 157

7.7 Inside Delta Connected Starter 158

7.7.1 Line Connected Soft Starter 158
7.7.2 Inside Delta Connected Starter 159

7.8 Wye Delta Starter . . . 160
7.9 Across The Line (Full Voltage Starter) . . . 163
7.10 Single Phase Soft Starter . . . 164
7.11 Phase Control . . . 165
7.11.1 Master/Slave Starter Configuration: . . . 166
7.12 Current Follower . . . 167
7.13 Start/Stop Control Logic . . . 168
7.14 Hand/Off/Auto Selector Switch . . . 169
7.15 Simplified I/O Schematics . . . 170
7.16 Remote Modbus Communications . . . 171
7.16.1 Supported Commands . . . 171
7.16.2 Modbus Register Addresses . . . 171
7.16.3 Cable Specifications . . . 171

8 TROUBLESHOOTING & MAINTENANCE . . . 174
8.1 Safety Precautions . . . 174
8.2 Preventative Maintenance . . . 174
8.2.1 General Information . . . 174
8.2.2 Preventative Maintenance . . . 174
8.3 General Troubleshooting Charts . . . 175
8.3.1 Motor does not start, no output to motor . . . 175
8.3.2 During starting, motor rotates but does not reach full speed . . . 176
8.3.3 Starter not accelerating as desired . . . 176
8.3.4 Starter not decelerating as desired . . . 177
8.3.5 Motor stops unexpectedly while running . . . 177
8.3.6 Metering incorrect . . . 178
8.3.7 Other Situations . . . 179
8.4 Fault Code Table . . . 180
8.5 SCR Testing . . . 187
8.5.1 Resistance . . . 187
8.5.2 Voltage . . . 187
8.5.3 Integral Bypass . . . 187
8.6 Built In Self Test Functions . . . 188
8.6.1 Standard BIST Tests: . . . 188
8.6.2 Powered BIST Tests: . . . 189
8.7 SCR Replacement . . . 191
8.7.1 Typical Stack Assembly . . . 191
8.7.2 SCR Removal . . . 191
8.7.3 SCR Installation . . . 191
8.7.4 SCR Clamp . . . 192
8.7.5 Tightening Clamp . . . 192
8.7.6 Testing SCR . . . 192

TABLE OF CONTENTS

APPENDIX A ALARM CODES 194

APPENDIX B FAULT CODES 196

APPENDIX C SPARE PARTS 197

APPENDIX D EU DECLARATION OF CONFORMITY 198

APPENDIX E MODBUS REGISTER MAP 199

APPENDIX F PARAMETER TABLES 207

1 Introduction

Using this Manual

Layout

This manual is divided into 10 sections. Each section contains topics related to the section. The sections are as follows:

- Introduction
- Technical Information
- Installation
- Keypad Operation
- Parameters
- Parameter Description
- Applications
- Theory of Operation
- Troubleshooting & Maintenance
- Appendices

Symbols

There are 2 symbols used in this manual to highlight important information. The symbols appear as the following:

Electrical Hazard warns of situations in which a high voltage can cause physical injury, death and/or damage equipment.

Caution warns of situations in which physical injury and/damage to equipment may occur by means other than electrical.

Highlight mark an important point in the documentation.

DANGER

HAZARD OF ELECTRIC SHOCK, EXPLOSION, OR ARC FLASH
Only qualified personnel familiar with low voltage equipment are to perform work described in this set of instructions.
Apply appropriate personal protective equipment (PPE) and follow safe electrical work practices. See NFPA 70E.
Turn off all power before working on or inside equipment.
Use a properly rated voltage sensing device to confirm that the power is off.
Before performing visual inspections, tests, or maintenance on the equipment, disconnect all sources of electric power.
Assume that circuits are live until they have been completely de-energized, tested, and tagged. Pay particular attention to the design of the power system. Consider all sources of power, including the possibility of backfeeding.
Replace all devices, doors, and covers before turning on power to this equipment.

Failure to follow these instructions will result in death or serious injury.

Benshaw Services

General Information

Benshaw offers its customers the following:

- Start-up services
- On-site training services
- Technical support
- Detailed documentation
- Replacement parts

⌘ **NOTE:** Information about products and services is available by contacting Benshaw, refer to page 4.

Start-Up Services

Benshaw technical field support personnel are available to customers with the initial start-up of the RediStart MX^2. Information about start-up services and fees are available by contacting Benshaw.

On-Site Training Services

Benshaw technical field support personnel are available to conduct on-site training on RediStart MX^2 operations and troubleshooting.

Technical Support

Benshaw technical support personnel are available (at no charge) to answer customer questions and provide technical support over the telephone. For more information about contacting technical support personnel, refer to page 4.

Documentation

Benshaw provides all customers with:

- Operations manual.
- Wiring diagram.

All drawings are produced in AutoCAD© format. The drawings are available on standard CD / DVD or via e-mail by contacting Benshaw.

On-Line Documentation

All RediStart MX^2 documentation is available on-line at **http://www.benshaw.com**.

Replacement Parts

Spare and replacement parts can be purchased from Benshaw Technical Support.

Software Number

This manual pertains to the software version numbers 810023-01-08.

Hardware Number

This manual pertains to the hardware version numbers 300055-01-05.

Publication History

See page 213.

Warranty

Benshaw provides a 1 year standard warranty with its starters. An extension to the 3 year warranty is provided when a Benshaw or Benshaw authorized service technician completes the installation and initial start up. The warranty data sheet must also be signed and returned. The cost of this service is not included in the price of the Benshaw soft starter and will be quoted specifically to each customers needs. All recommended maintenance procedures must be followed throughout the warranty period to ensure validity. This information is also available by going online to register at www.benshaw.com.

Contacting Benshaw

Contacting Benshaw

Information about Benshaw products and services is available by contacting Benshaw at one of the following offices:

Benshaw Inc. Corporate Headquarters
1659 E. Sutter Road
Glenshaw, PA 15116
Phone: (412) 487-8235
Tech Support: (800) 203-2416
Fax: (412) 487-4201

Benshaw Canada Controls Inc.
550 Bright Street East
Listowel, Ontario N4W 3W3
Phone: (519) 291-5112
Tech Support: (877) 236-7429 (BEN-SHAW)
Fax: (519) 291-2595

Benshaw West
14715 North 78th Way, Suite 600
Scottsdale, AZ 85260
Phone: (480) 905-0601
Fax: (480) 905-0757

Benshaw High Point
EPC Division
645 McWay Drive
High Point, NC 27263
Phone: (336) 434-4445
Fax: (336) 434-9682

Benshaw Mobile
CSD Division
5821 Rangeline Road, Suite 202
Theodor, AL 36582
Phone: (251) 443-5911
Fax: (251) 443-5966

Benshaw Pueblo
Trane Division
1 Jetway Court
Pueblo, CO 81001
Phone: (719) 948-1405
Fax: (719) 948-1445

Technical support for the RediStart MX^2 Series is available at no charge by contacting Benshaw's customer service department at one of the above telephone numbers. A service technician is available Monday through Friday from 8:00 a.m. to 5:00 p.m. EST.

⌘ **NOTE:** An on-call technician is available after normal business hours and on weekends by calling Benshaw and following the recorded instructions.

To help assure prompt and accurate service, please have the following information available when contacting Benshaw:

- Name of Company
- Telephone number where the caller can be contacted
- Fax number of caller
- Benshaw product name
- Benshaw model number
- Benshaw serial number
- Name of product distributor
- Approximate date of purchase
- Voltage of motor attached to Benshaw product
- FLA of motor attached to Benshaw product
- A brief description of the application

MX^2 & MX^3 Product Comparison

1.1 Additional MX^3 Product Features

The MX^2 is a standard solid state starter. If you require additional features, please review the expanded feature set of the MX^3 Solid State Starter below. For the additional information on the MX^3 Solid State Starter contact Benshaw.

	MX^3 Product Features
1	5 Additional Digital Inputs
2	3 Additional 5Amp, Form A Relays
3	Real Time Clock
4	Zero Sequence Ground Fault
5	16 RTD O/L Biasing (Platinum) Remote by RS-485
6	Motor PTC Feedback
7	Preset Slow Speeds (Cyclo-Convertor) 0.1 to 40% Motor Speed
8	99 Event Log
9	Backspin Timer
10	Starts per Hour
11	Time Between Starts
12	PORT (Power Outage Ride-Thru)
13	Squared and S Ramp Profiles
14	Speed Controlled Ramp with Tachometer Feedback

Interpreting Model Numbers

Figure 1: RediStart MX^2 Series Model Numbers

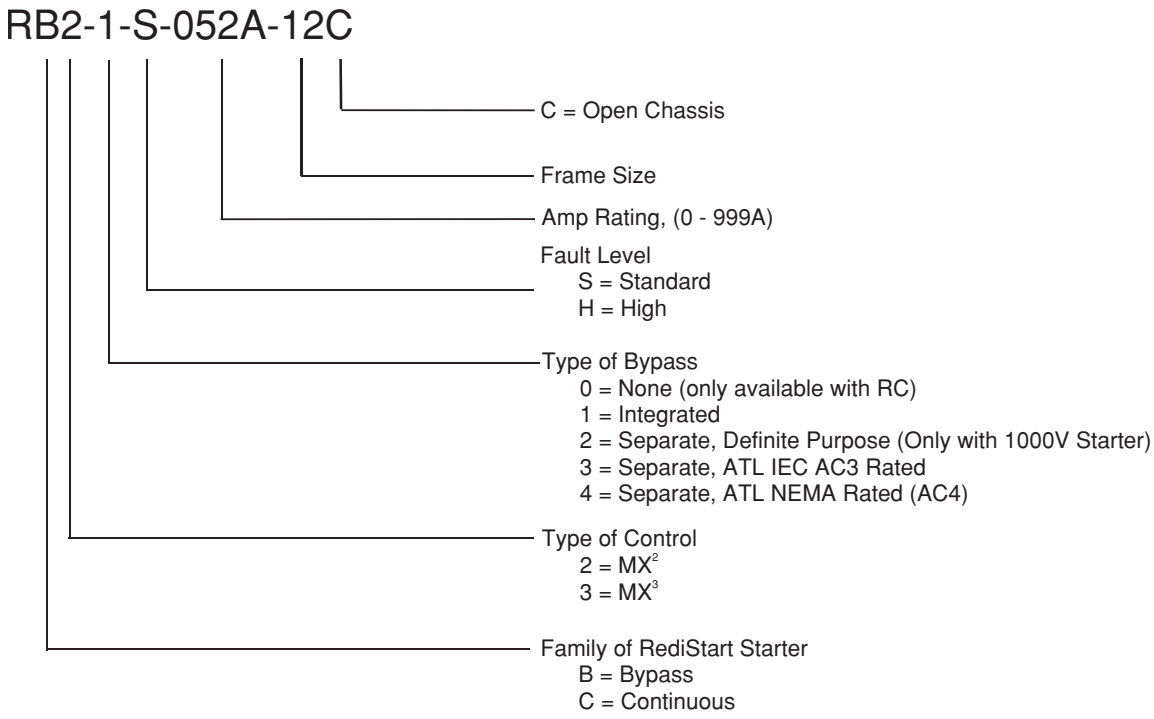

Example of Model Number: RX2-1S-361A-14C
A RediStart starter with bypass, MX^2 control, Integrated Bypass, Standard Fault, 361 Amp unit, Frame 14, open Chassis.

General Overview of a Reduced Voltage Starter

General Overview

The RediStart MX^2 motor starter is a microprocessor-controlled starter for single or three-phase motors. The starter can be custom designed for specific applications. A few of the features are:

- Solid state design.
- Reduced voltage starting and soft stopping.
- Closed-loop motor current control, power (kW) control, torque control.
- Programmable motor protection.
- Programmable operating parameters.
- Programmable metering.

Each starter can operate within applied line voltage and frequency values of 100VAC to 600VAC (optional 1000VAC) and 23 to 72Hz.

The starter can be programmed for any motor FLA and all of the common motor service factors. It enables operators to control both motor acceleration and deceleration. The RediStart MX^2 can also protect the motor and its load from damage that could be caused by incorrect phase order wiring.

The starter continually monitors the amount of current being delivered to the motor. This protects the motor from overheating or drawing excess current.

Features

The enhanced engineering features of the starter include:

- Multiple frame sizes
- Universal voltage operation
- Universal frequency operation
- Programmable motor overload multiplier
- Controlled acceleration and deceleration
- Phase rotation protection
- Regulated current control
- Electronic motor thermal overload protection
- Electronic over/under current protection
- Single phase protection
- Line-to-line current imbalance protection
- Stalled motor protection
- Programmable metering
- Passcode protected
- Programmable Relays
- Analog output with digital offset and span adjustment
- Analog input with digital offset and span adjustment
- Voltage and Current Accuracy of 3%
- Slow Speed (Cyclo Conversion) 7.1% & 14.3% forward and reverse
- Motor winding (Anti-Condensation)
- Anti-windmilling brake
- DC Injection Braking

NOTES:

2 Technical Specifications

Technical Specifications

2.1 General Information

The physical specifications of the starter vary depending upon its configuration. The applicable motor current determines the configuration and its specific application requirements.
Specifications are subject to change without notice.

This document covers the control electronics and several power sections:

- MX^2 control card
- RB Power Stacks with Bypass, Integral and Separate
- RC Power Stacks, Continuous operation, NO bypass

Electrical Ratings

2.2 Electrical Ratings

2.2.1 Terminal Points and Functions

Table 1: Terminals

Function	Terminal Block	Terminal Number	Description
Control Power	TB1	G, ground N, 120VAC neutral N, 120VAC neutral L, 120VAC line L, 120VAC line	96 – 144 VAC input, 50/60 Hz 45VA required for control card
Relay 1 (R1)	TB2	NO1:Normally Open Contact RC1:Common NC1: Normally Closed Contact	Relay Output, SPDT form C **NO Contact (resistive)** / **NC Contact(resistive)** 5A at 250VAC / 3A at 250VAC 5A at 125VAC / 3A at 125VAC 5A at 30VDC / 3A at 30VDC 1250VA / 750VA
Relay 2 (R2)	TB2	NO2: Normally Open Contact RC2: Common Contact NC2: Normally Closed Contact	Relay Output, SPDT form C **NO Contact (resistive)** / **NC Contact(resistive)** 5A at 250VAC / 3A at 250VAC 5A at 125VAC / 3A at 125VAC 5A at 30VDC / 3A at 30VDC 1250VA / 750VA
Relay 3 (R3)	TB2	NO3: Normally Open Contact RC3: Common Contact NC3: Normally Closed Contact	10A at 250VAC 10A at 125VAC 10A at 30VDC 2500VA
Digital Inputs	TB3	1: Start 2: DI1 3: DI2 4: DI3 5: Common	120VAC digital input 2500V optical isolation 4mA current draw Off: 0-35VAC On: 60-120VAC
Serial Comm	TB4	1: B+ 2: A- 3: COM	Modbus RTU serial communication port. RS-485 interface 19.2k baud maximum 1500V Isolation
Analog I/O	TB5	1: Ain Power 2: Ain + 3: Ain - 4: Common 5: Aout 6: Common 7: Shield	Input: Voltage or Current Voltage: 0-10VDC, 67KΩ impedance Current: 0-20mA, 500Ω impedance Output: Voltage or Current Voltage: 0-10VDC, 120mA maximum Current: 0-20mA, 500Ω load maximum
Display	RJ45		Door Mounted Display Connector

Table 1: Terminals

Function	Terminal Block	Terminal Number	Description
SCR	J6 to J11	1: Gate 2: Cathode	SCR gate Connections
Phase C.T.	J12	1: CT1 2: CT1 3: CT2 4: CT2 5: CT3 6: CT3	See CT Connector

Wire Gauge: The terminals can support 1- 14 AWG wire or 2-16 AWG wire or smaller.

Torque Rating: The terminals on the control card have a torque rating of 5.0-inch lb. or 0.56Nm. This MUST be followed or damage will occur to the terminals.

Refer to the Control Card Layout on page 39.

2.2.2 Measurements and Accuracies

Table 2: Measurements and Accuracies

Internal Measurements	
CT Inputs	Conversion: True RMS, Sampling @ 1.562kHz Range: 1-6400A
Line Voltage Inputs	Conversion: True RMS, Sampling @ 1.562kHz Range: 100VAC to 1000VAC 23 to 72 Hz
Metering	
Current	0 – 40,000 Amps ± 3%
Voltage	0 – 1250 Volts ± 3%
Watts	0 – 9,999 MW ± 5%
Volts-Amps	0 – 9,999 MVA ± 5%
Watt-Hours	0 – 10,000 MWh ± 5%
PF	-0.01 to +0.01 (Lag & Lead) ± 5%
Line Frequency	23 – 72 Hz ± 0.1 Hz
Ground Fault	5 – 100% FLA ± 5% (Machine Protection)
Run Time	± 3 seconds per 24 hour period
Analog Input	Accuracy ± 3% of full scale (10 bit)
Analog Output	Accuracy ±2% of full scale (12 bit)
	⌘ **NOTE:** Percent accuracy is percent of full scale of the given ranges, Current = Motor FLA, Voltage = 1000V, Watts/Volts-Amps/Watt-Hours = Motor & Voltage range

2.2.3 List of Motor Protection Features

- ANSI 19 – Reduced Voltage Start
- ANSI 27 / 59 – Adjustable over/under voltage protection (Off or 1 to 40%, time 0.1 to 90.0 sec. in 0.1 sec. intervals, independent over and under voltage levels)
- ANSI 37 – Undercurrent detection (Off or 5 to 100% and time 0.1 to 90.0 sec. in 0.1 sec. intervals)
- ANSI 46 – Current imbalance detection (Off or 5 to 40%)
- ANSI 47 – Phase rotation (selectable ABC, CBA, Insensitive, or Single Phase)
- ANSI 48 – Adjustable up-to-speed / stall timer (1 to 900 sec. in 1 sec. intervals)
- ANSI 50 – Instantaneous electronic overcurrent trip
- ANSI 51 – Electronic motor overload (Off, class 1 to 40, separate starting and running curves available)
- ANSI 51 – Overcurrent detection (Off or 50 to 800% and time 0.1 to 90.0 sec. in 0.1 sec. intervals)
- ANSI 51G – Residual Ground fault detection (Off or 5 to 100% of motor FLA)
- ANSI 74 – Alarm relay output available
- ANSI 81 – Over / Under Frequency
- ANSI 86 – Overload lockout
- Single Phase Protection
- Shorted SCR detection
- Mechanical Jam

2.2.4 Solid State Motor Overload

The MX^2 control has an advanced I^2t electronic motor overload (OL) protection function. For optimal motor protection the MX^2 control has forty standard NEMA style overload curves available for use. Separate overloads can be programmed, one for acceleration and another for normal running operation. The overloads can be individual, the same or completely disabled if necessary. The MX^2 motor overload function also implements a NEMA based current imbalance overload compensation, user adjustable hot and cold motor compensation and user adjustable exponential motor cooling.

Figure 2: Commonly Used Overload Curves

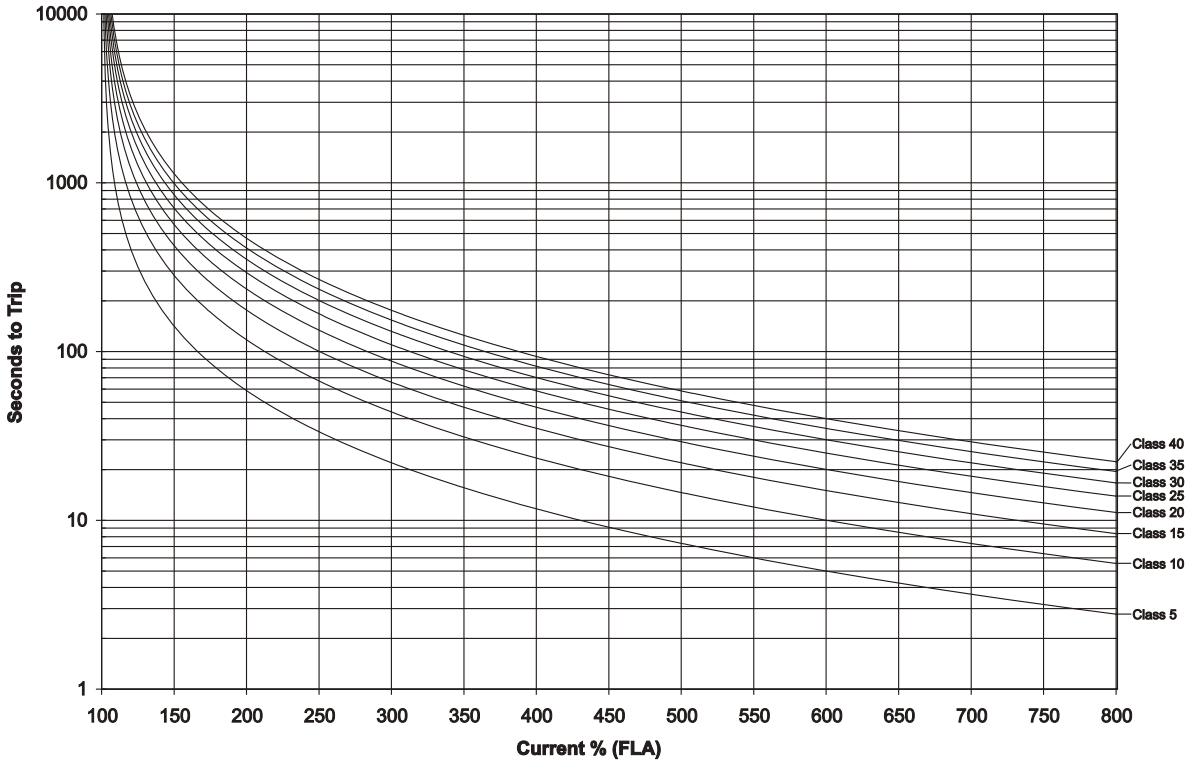

The motor overload will NOT trip when the current is less than motor Full Load Amps (FLA) * Service Factor (SF).

The motor overload "pick up" point current is at motor Full Load Amps (FLA) * Service Factor (SF).

The motor overload trip time will be reduced when there is a current imbalance present.

⌘ **NOTE:** Refer to Theory of Operation, section 7.1 on page 132 for more motor overload details and a larger graph.

Refer to http://www.benshaw.com/olcurves.html for an automated overload calculator.

2.2.5 CT Ratios

Table 3: CT Ratios

CT Ratio	Minimum FLA (A rms)	Maximum FLA (A rms)
72:1 (4 wraps 288:1)	4	16
96:1 (3 wraps 288:1)	5	21
144:1 (2 wraps 288:1)	8	32
288:1	15	64
864:1	45	190
2640:1	135	590
3900:1	200	870
5760:1	295	1285
8000:1	410	1800
14400:1 (CT-CT combination)	740	3200
28800:1 (CT-CT combination)	1475	6400

⌘ **NOTE**: See P78/FUN 03 (CT Ratio) parameter on page 126 for more information.

Starter Power Ratings

2.3 Starter Power Ratings

Each RB2 model starter is rated for three different starting duties. For example, a starter can operate a:

300HP motor for a standard duty start (350% for 30 seconds)

Or

200HP for a heavy duty start (500% for 30 seconds)

Or

150HP motor for a severe duty start (600% for 30 seconds)

Or

450HP motor when connected to the inside delta of a motor for a standard duty start (350% for 30 seconds)

2.3.1 Standard Duty (350% for 30 sec) Ratings

Table 4: Standard Duty Horsepower Ratings

Standard Duty (350% current for 30 seconds, 115% Continuous)						
MODEL NUMBER	NOMINAL AMPS	HORSEPOWER RATING				
		200-208V	230-240V	380-400V	440-480V	575-600V
RB2-1-S-027A-11C	27	7.5	10	15	20	25
RB2-1-S-040A-11C	40	10	15	25	30	40
RB2-1-S-052A-12C	52	15	20	30	40	50
RB2-1-S-065A-12C	65	20	25	40	50	60
RB2-1-S-077A-13C	77	25	30	40	60	75
RB2-1-S-096A-13C	96	30	40	50	75	100
RB2-1-S-125A-14C	125	40	50	75	100	125
RB2-1-S-156A-14C	156	50	60	75	125	150
RB2-1-S-180A-14C	180	60	75	100	150	200
RB2-1-S-180A-15C	180	60	75	100	150	200
RB2-1-S-240A-15C	240	75	100	150	200	250
RB2-1-S-302A-15C	302	100	125	150	250	300
RB2-1-S-361A-16C	361	125	150	200	300	400
RB2-1-S-414A-17C	414	150	150	250	350	400
RB2-1-S-477A-17C	477	150	200	300	400	500
RB2-1-S-515A-17C	515	200	200	300	450	500
RB2-1-S-590A-18C	590	200	250	350	500	600
RB2-1-S-720A-19C	720	250	300	400	600	700
RB2-1-S-838A-20C	838	300	350	500	700	800

⌘ **NOTE:** Do not exceed Class 10 overload setting.

2.3.2 Heavy Duty (500% current for 30 sec) Ratings

Table 5: Heavy Duty Horsepower Ratings

Heavy Duty (500% current for 30 seconds, 125% Continuous)						
MODEL NUMBER	NOMINAL AMPS	HORSEPOWER RATING				
		200-208V	230-240V	380-400V	440-480V	575-600V
RB2-1-S-027A-11C	24	7.5	10	15	20	25
RB2-1-S-040A-11C	40	10	15	25	30	40
RB2-1-S-052A-12C	54	15	20	30	40	50
RB2-1-S-065A-12C	54	15	20	30	40	50
RB2-1-S-077A-13C	54	15	20	30	40	50
RB2-1-S-096A-13C	96	30	40	50	75	100
RB2-1-S-125A-14C	125	40	50	75	100	125
RB2-1-S-156A-14C	125	40	50	75	100	125
RB2-1-S-180A-14C	125	40	50	75	100	125
RB2-1-S-180A-15C	180	60	75	100	150	200
RB2-1-S-240A-15C	215	60	75	125	150	200
RB2-1-S-302A-15C	215	60	75	125	150	200
RB2-1-S-361A-16C	252	75	100	150	200	250
RB2-1-S-414A-17C	372	125	150	200	300	400
RB2-1-S-477A-17C	372	125	150	200	300	400
RB2-1-S-515A-17C	372	125	150	200	300	400
RB2-1-S-590A-18C	551	200	200	300	450	500
RB2-1-S-720A-19C	623	200	250	350	500	600
RB2-1-S-838A-20C	623	200	250	350	500	600

⌘ **NOTE:** Do not exceed Class 20 overload setting.

2.3.3 Severe Duty (600% current for 30 sec) Ratings

Table 6: Severe Duty Horsepower Ratings

Severe Duty (600% current for 30 seconds 125% Continuous)						
MODEL NUMBER	NOMINAL AMPS	HORSEPOWER RATING				
		200-208V	230-240V	380-400V	440-480V	575-600V
RB2-1-S-027A-11C	24	5	7.5	10	15	20
RB2-1-S-040A-11C	40	10	10	20	30	40
RB2-1-S-052A-12C	45	10	15	25	30	40
RB2-1-S-065A-12C	45	10	15	25	30	40
RB2-1-S-077A-13C	45	10	15	25	30	40
RB2-1-S-096A-13C	77	25	30	40	60	75
RB2-1-S-125A-14C	105	30	40	60	75	100
RB2-1-S-156A-14C	105	30	40	60	75	100
RB2-1-S-180A-14C	105	30	40	60	75	100
RB2-1-S-180A-15C	180	50	60	100	125	150
RB2-1-S-240A-15C	180	50	60	100	125	150
RB2-1-S-302A-15C	180	50	60	100	125	150
RB2-1-S-361A-16C	210	60	75	125	150	200
RB2-1-S-414A-17C	310	100	125	150	250	300
RB2-1-S-477A-17C	310	100	125	150	250	300
RB2-1-S-515A-17C	310	100	125	150	250	300
RB2-1-S-590A-18C	515	150	200	300	450	500
RB2-1-S-720A-19C	515	150	200	300	450	500
RB2-1-S-838A-20C	515	150	200	300	450	500

⌘ **NOTE:** Do not exceed Class 30 overload setting.

2.3.4 Inside Delta Connected Standard Duty (350% for 30 sec) Ratings

Table 7: Inside Delta Standard Duty Horsepower Ratings

INSIDE DELTA Std Duty (350% start for 30 seconds 115% Continuous)						
MODEL NUMBER	NOMINAL AMPS	HORSEPOWER RATING				
		200-208V	220-240V	380-415V	440-480V	575-600V
RB2-1-S-125A-14C	180	60	75	100	150	200
RB2-1-S-156A-14C	240	75	100	150	200	250
RB2-1-S-180A-14C	279	75	100	150	200	250
RB2-1-S-180A-15C	279	75	100	150	200	250
RB2-1-S-240A-15C	361	125	150	200	300	400
RB2-1-S-302A-15C	414	150	150	250	350	400
RB2-1-S-361A-16C	515	200	150	250	450	400
RB2-1-S-414A-17C	590	200	250	350	500	600
RB2-1-S-477A-17C	720	250	300	400	600	700
RB2-1-S-515A-17C	800	250	300	500	600	700
RB2-1-S-590A-18C	838	300	350	500	700	800
RB2-1-S-720A-19C	1116	300	350	700	900	800
RB2-1-S-838A-20C	1300	400	500	800	1000	1200

⌘ **NOTE:** Do not exceed Class 10 overload setting.

2.3.5 RB2 Power Stack Ratings and Protection Requirements

Model Number	Nominal Current (A)	115% Current Rating (A)	Nominal Current (A) Inside Delta	115% Current (A) Inside Delta	Unit Withstand Rating (KA) Std. Fault[5]	Unit Withstand Rating (KA) High. Fault[5]	Connection Type		Allowable Fuse Class	Maximum Fuse Size Current (A)	Maximum Circuit Breaker Trip Rating (A)	Running Watt Loss, After Bypassed (W)
							Line	Load				
RB_1_027A11C	27	31	-	48	5	5	Power Block[1]	Bus Tab[3]	J/T/RK1/RK5	45/70*	60/100*	49
RB_1_040A11C	40	46	-	71	5	5	Power Block[1]	Bus Tab[3]	J/T/RK1/RK5	70/100*	100/150*	49.8
RB_1_052A12C	52	60	-	93	10	10	Power Block[2]	Bus Tab[3]	J/T/RK1/RK5	90/125*	125/200*	51
RB_1_065A12C	65	75	-	116	10	10	Power Block[2]	Bus Tab[3]	J/T/RK1/RK5	110/175*	150/250*	53.7
RB_1_077A13C	77	89	-	137	10	10	Bus Tab[3]	Bus Tab[3]	J/T/RK1/RK5	125/200*	175/300*	56
RB_1_096A13C	96	110	-	171	10	10	Bus Tab[3]	Bus Tab[3]	J/T/RK1/RK5	150/250*	225/350*	59
RB_1_125A14C	125	144	194	223	18	30	Bus Tab[4]	Bus Tab[4]	J/T/RK1/RK5	200/300*	300/450*	62
RB_1_156A14C	156	179	242	278	18	30	Bus Tab[4]	Bus Tab[4]	J/T/RK1/RK5	250/400*	350/600*	66
RB_1_180A14C	180	207	279	321	18	30	Bus Tab[4]	Bus Tab[4]	J/T/RK1/RK5	300/450*	450/700*	71
RB_1_180A15C	180	207	279	321	30	65	Bus Tab[4]	Bus Tab[4]	J/T/RK1/RK5	300/450*	450/700*	71
RB_1_240A15C	240	276	372	428	30	65	Bus Tab[4]	Bus Tab[4]	J/T/RK1/RK5	400/600*	600/900*	75
RB_1_302A15C	302	347	468	538	30	65	Bus Tab[4]	Bus Tab[4]	J/T/RK1/RK5/L	500/800*	700/1100*	82
RB_1_361A16C	361	415	560	643	30	65	Bus Tab[4]	Bus Tab[4]	J/T/RK1/RK5/L	600/900*	900/1300*	92
RB_1_414A17C	414	476	642	738	42	65	Bus Tab[4]	Bus Tab[4]	L/T	700/1100*	1000/1600*	103
RB_1_477A17C	477	549	739	850	42	65	Bus Tab[4]	Bus Tab[4]	L/T	800/1200*	1200/1800*	120
RB_1_515A17C	515	592	798	918	42	65	Bus Tab[4]	Bus Tab[4]	L	900/1300*	1300/2000*	140
RB_1_590A18C	590	679	915	1052	42	65	Bus Tab[4]	Bus Tab[4]	L	1000/1600*	1400/2000*	165
RB_1_720A18C	720	828	1116	1283	42	65	Bus Tab[4]	Bus Tab[4]	L	1200/1800*	1800/2500*	205
RB_1_838A19C	838	964	1299	1494	42	65	Bus Tab[4]	Bus Tab[4]	L	1400/2000*	2000/3000*	245

* Rating for Inside Delta Application

1 Power Block wire size #12-#4awg

2 Power Block wire size #10-#1awg

3 Bus Tab with 1 hole ¼" diameter

4 Bus Tab with NEMA 2 hole pattern ½" diameter ¾" apart as defined by NEMA Standard CC1

5 For higher kAIC ratings, consult factory

2.3.6 Power Stack Input Ratings with Protection Requirements for Separate Bypass

Model Number	Nominal Current (A)	115% Current Rating (A)	Nominal Current (A) Inside Delta	115% Current (A) Inside Delta	AC3 Unit Withstand Fault Rating (KA)[5]	NEMA (AC4) Unit Withstand Fault Rating (KA)[5]	Connection Type		Allowable Fuse Class	Maximum Fuse Size Current (A)	Maximum Circuit Breaker Trip Rating (A)	Running Watt Loss, After Bypassed (W)
							Line	Load				
RB_2_027A11C	27	31	-	-	5	5	Power Block[1]	Bus Tab[3]	J/T/RK1/RK5	45/70*	60/100*	49
RB_2_040A11C	40	46	-	-	5	10	Power Block[1]	Bus Tab[3]	J/T/RK1/RK5	70/100*	100/150*	49.8
RB_2_052A12C	52	60	-	-	5	10	Power Block[2]	Bus Tab[3]	J/T/RK1/RK5	90/125*	125/200*	51
RB_2_065A12C	65	75	-	-	10	10	Power Block[2]	Bus Tab[3]	J/T/RK1/RK5	110/175*	150/250*	53.7
RB_2_077A13C	77	89	-	-	10	10	Bus Tab[3]	Bus Tab[3]	J/T/RK1/RK5	125/200*	175/300*	56
RB_2_096A13C	96	110	-	-	10	10	Bus Tab[3]	Bus Tab[3]	J/T/RK1/RK5	150/250*	225/350*	59
RB_2_125A14C	125	144	194	223	10	10	Bus Tab[4]	Bus Tab[4]	J/T/RK1/RK5	200/300*	300/450*	62
RB_2_156A14C	156	179	242	278	10	18	Bus Tab[4]	Bus Tab[4]	J/T/RK1/RK5	250/400*	350/600*	66
RB_2_180A14C	180	207	279	321	10	18	Bus Tab[4]	Bus Tab[4]	J/T/RK1/RK5	300/450*	450/700*	71
RB_2_180A15C	180	207	279	321	10	18	Bus Tab[4]	Bus Tab[4]	J/T/RK1/RK5	300/450*	450/700*	71
RB_2_240A15C	240	276	372	428	18	18	Bus Tab[4]	Bus Tab[4]	J/T/RK1/RK5	400/600*	600/900*	75
RB_2_302A15C	302	347	468	538	18	30	Bus Tab[4]	Bus Tab[4]	J/T/RK1/RK5/L	500/800*	700/1100*	82
RB_2_361A16C	361	415	560	643	30	30	Bus Tab[4]	Bus Tab[4]	J/T/RK1/RK5/L	600/900*	900/1300*	92
RB_2_414A17C	414	476	642	738	30	30	Bus Tab[4]	Bus Tab[4]	L/T	700/1100*	1000/1600*	103
RB_2_477A17C	477	549	739	850	30	30	Bus Tab[4]	Bus Tab[4]	L/T	800/1200*	1200/1800*	120
RB_2_515A17C	515	592	798	918	30	30	Bus Tab[4]	Bus Tab[4]	L	900/1300*	1300/2000*	140
RB_2_590A18C	590	679	915	1052	30	30	Bus Tab[4]	Bus Tab[4]	L	1000/1600*	1400/2000*	165
RB_2_720A18C	720	828	1116	1283	30	30	Bus Tab[4]	Bus Tab[4]	L	1200/1800*	1800/2500*	205
RB_2_838A19C	838	964	1299	1494	Consult Factory	Consault Factory	Bus Tab[4]	Bus Tab[4]	L	1400/2000*	2000/3000*	245

* Rating for Inside Delta Application

1 Power Block wire size #12-#4awg

2 Power Block wire size #10-#1awg

3 Bus Tab with 1 hole ¼" diameter

4 Bus Tab with NEMA 2 hole pattern ½" diameter ¾" apart as defined by NEMA Standard CC1

5 For higher kAIC ratings, consult factory

2.3.7 Power Stack Input Ratings with Protection Requirements for RC No Bypass

Model Number	Nominal Current (A)	125% Current	Unit Withstand Fault Rating (kA)[4]	Connection Type		Current Limiting Circuit Breaker Protected Rating			Current Limiting Circuit Breaker Protected Rating			Running Watt Loss, After Bypassed (W)
				Line	Load	Allowable Fuse Class	Maximum Fuse Current (A)	Short Circuit Rating	Catalog Number	Trip Plug	Short Circuit Rating	
RC_ 0 _027A31C	27	33.75	42	Power Block[1]	Power Block[1]	J/600V AC T/RK1	40 60	100kA 50kA	CED63B	60A	42kA	110
RC_ 0 _040A31C	40	50	42	Power Block[1]	Power Block[1]	J/600V AC T/RK1	60 100	100kA 50kA	CED63B	60A	42Ka	145
RC_ 0 _052A31C	52	65	42	Power Block[1]	Power Block[1]	J/600V AC T/RK1	60 100	100kA 50kA	CED63B	100A	42kA	175
RC_ 0 _065A32C	65	81	42	Power Block[2]	Power Block[2]	J/600V AC T/RK1	225	100kA	CED63B	100A	42kA	210
RC_ 0 _077A32C	77	96	42	Power Block[2]	Power Block[2]	J/600V AC T/RK1	225	100kA	CED63B	125A	42kA	240
RC_ 0 _096A33C	96	120	42	Power Block[3]	Power Block[3]	J/600V AC T/RK1	225	100kA	CFD63B	225A	42kA	285
RC_ 0 _124A34C	124	155	42	Power Block[3]	Power Block[3]	J/600V AC T/RK1	225	100kA	CFD63B	225A	42kA	360
RC_ 0 _125A34C	125	155	42	Bus Tab	Bus Tab	J/600V AC T/RK1	350	100kA	CFD63B	225A	42kA	360
RC_ 0 _156A34C	156	195	42	Bus Tab	Bus Tab	J/600V AC T/RK1	400	100kA	CFD63B	225A	65kA	435
RC_ 0 _180A35C	180	225	42	Bus Tab	Bus Tab	J/600V AC T/RK1	400	100kA	CFD63B	250A	65kA	495
RC_ 0 _240A35C	240	300	42	Bus Tab	Bus Tab	J/600V AC T/RK1	600	100kA	CFD63B	400A	65kA	645
RC_ 0 _302A35C	302	377	42	Bus Tab	Bus Tab	J/600V AC T/RK1	800	100kA	CFD63B	400A	65kA	800
RC_ 0 _361A35C	361	421	42	Bus Tab	Bus Tab	J/600V AC T/RK1	800	100kA	CJD63B CLD63b	400A 600A	65kA	950
RC_ 0 _477A35C	477	596	42	Bus Tab	Bus Tab	J/600V AC T/RK1	800	100kA	CJD63B CLD63b	400A 600A	65kA	1240
RC_ 0 _590A36C	590	737	42	Bus Tab	Bus Tab	L	1400	100kA	CND63B CND63b	800A 1200a	85kA	1520
RC_ 0 _720A36C	720	900	42	Bus Tab	Bus Tab	L	1600	100kA	CND63B CND63b	800A 1200A	85kA	1845
RC_ 0 _840A36C	840	1050	85	Bus Tab	Bus Tab	L	1600	100kA	CND63B CND63b	800A 1200A	85kA	2145
RC_ 0 _960A37C	960	1200	85	Bus Tab	Bus Tab	L	1600 2000	100kA 50kA	HPD63F160	1200 – 1600A	85kA	2445
RC_-0_1080A-37C	1080	1350	85	Bus Tab	Bus Tab	L	1600 2000	100KA 50KA	HPD63F160	1200 – 1600A	85KA	
RC_ 0_1200KA38C	1200	1440	85	Bus Tab	Bus Tab	L	1600 2000	100kA 50kA	HPD63F160	1200 – 1600A	85kA	3045

1 Power Block wire size #6 awg max

2 Power Block wire size #2 awg max

3 Power Block wire size #2/0 max

4 For higher kAIC ratings, consult factory

2.3.8 RB2 Starter Control Power Requirements

Table 8: RB2 Starter CPT VA Requirements

Model Number	Power Required (VA)	Recommended Min. TX size	Model Number	Power Required (VA)	Recommended Min. TX size
RB2-1-S-027A-11C	74	75	RB2-1-S-240A-15C	243	250
RB2-1-S-040A-11C	74	75	RB2-1-S-302A-15C	243	250
RB2-1-S-052A-12C	111	125	RB2-1-S-361A-16C	243	250
RB2-1-S-065A-12C	111	125	RB2-1-S-414A-17C	441	450
RB2-1-S-077A-13C	111	125	RB2-1-S-477A-17C	441	450
RB2-1-S-096A-13C	111	125	RB2-1-S-515A-17C	441	450
RB2-1-S-125A-14C	131	150	RB2-1-S-590A-18C	441	450
RB2-1-S-156A-14C	243	250	RB2-1-S-720A-19C	441	450
RB2-1-S-180A-14C	243	250	RB2-1-S-838A-20C	243	250

2.3.9 RC2 Starter Control Power Requirements

Table 9: RC2 Starter CPT VA Requirements

Model Number	Power Required (VA)	Recommended Min. TX size	Model Number	Power Required (VA)	Recommended Min. TX size
RC2-1-S-027A-31C	45	75	RC2-1-S-240A-35C	123	150
RC2-1-S-040A-31C	45	75	RC2-1-S-302A-35C	123	150
RC2-1-S-052A-31C	45	75	RC2-1-S-361A-35C	201	250
RC2-1-S-065A-32C	45	75	RC2-1-S-414A-35C	150	200
RC2-1-S-077A-32C	45	75	RC2-1-S-477A-35C	225	350
RC2-1-S-096A-33C	45	75	RC2-1-S-590A-35C	225	350
RC2-1-S-124A-33C	45	75	RC2-1-S-720A-36C	225	350
RC2-1-S-125A-34C	123	150	RC2-1-S-840A-19C	225	350
RC2-1-S-156A-34C	123	150	RC2-1-S-960A-20C	225	350
RC2-1-S-180A-34C	123	150	RC2-1-S-1200A-37C	285	350

Mechanical Drawings

2.4 Dimensions

2.4.1 RB2 Chassis with Integral Bypass

Figure 3: RB2 - 27A - 96A

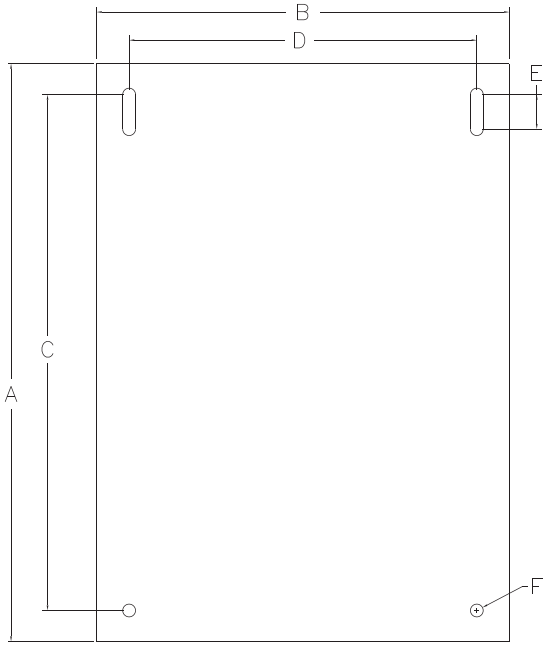

Model	A	B	C	D	E	F
RB2 27-65A	14	10	12.5	8.43	0.84	0.31
RB2 77-96A	15	10	13.5	8.43	0.84	0.31

Figure 4: RB2 125 - 361A

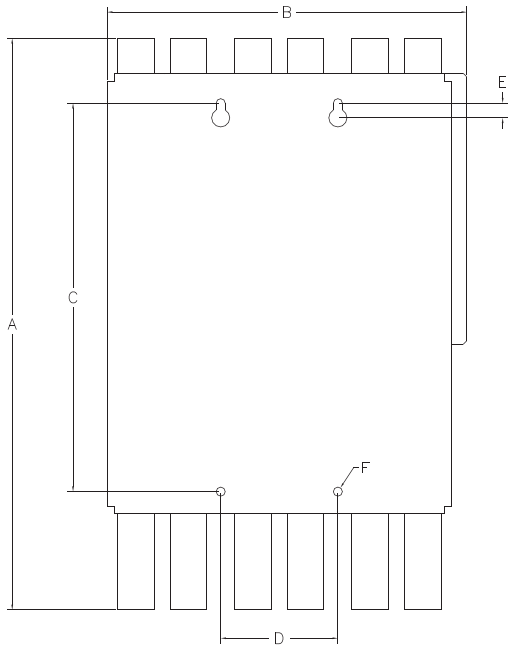

Model	A	B	C	D	E	F
RB2 125A	19.5	12.27	13.25	4	0.5	0.31
RB2 156-180A	21.25	12.00	15.25	4	0.5	0.31
RB2 180-302A	22.75	12.16	16.75	4	0.5	0.31
RB2 361A	23.91	13.16	18.63	4.31	0.5	0.31

Figure 5: RB2 414 - 838A

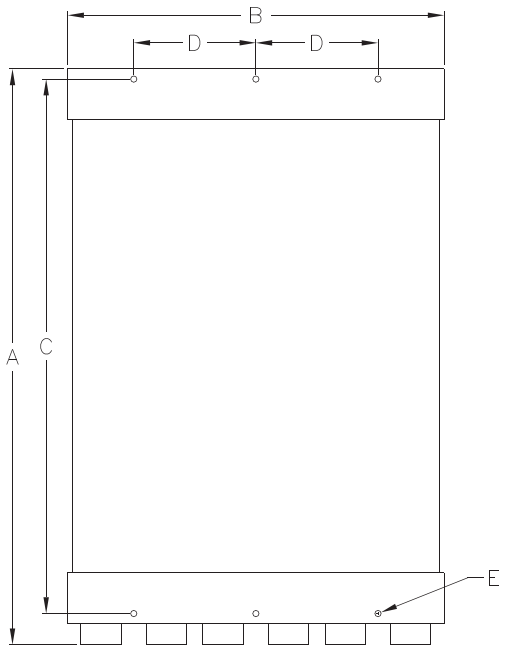

Model	A	B	C	D	E
RB2 414-590A	27.66	18.5	26.25	6	0.31
RB2 720A	29.38	18.5	28	6	0.31
RB2 838A	27.75	26.6	23.5	8.7	0.31

2.4.2 RC2 Chassis with no Bypass

Figure 6: RC2 0 - 124A

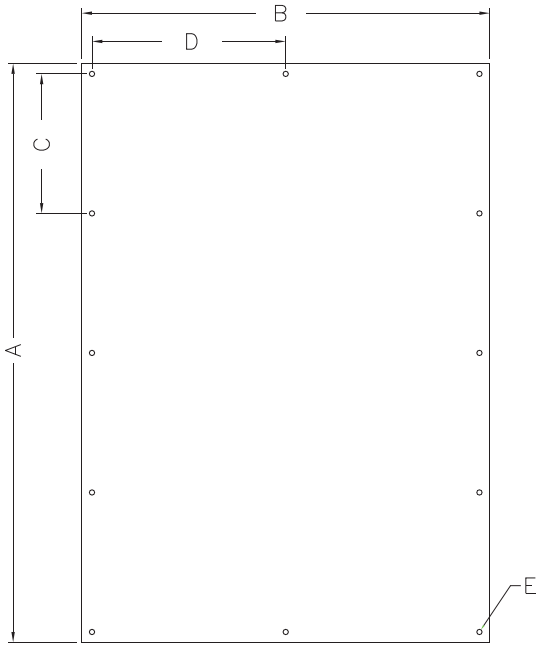

Model	A	B	C	D	E
RC2 27-52A	14	9.875	3.375	4.69	8-32 TAP
RC2 65-77A	18	10	4.375	4.75	¼-20 TAP
RC2 96-124A	27	10	5.313	4.75	¼-20 TAP

Figure 7: RC2 156 - 590A

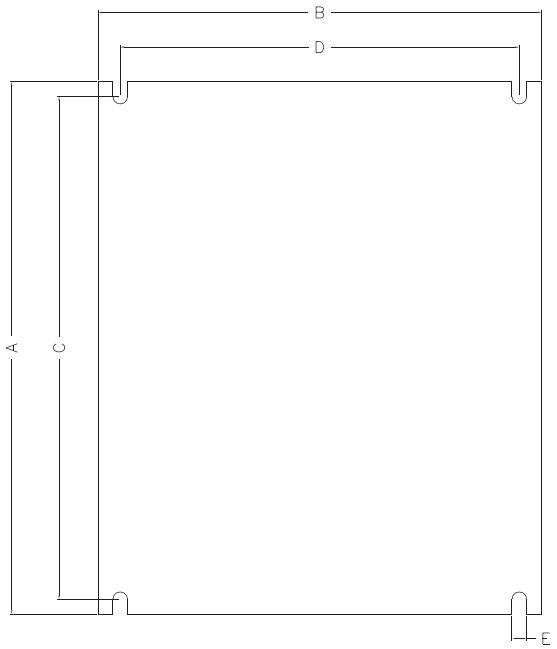

Model	A	B	C	D	E
RC2 156-180A	18	15	17	13.5	0.3
RC2 240A	24	15	23	13.5	0.5
RC2 302-361A	28	17.25	27	15.75	0.5
RC2 477A	28	20	27	18.5	0.5
RC2 590A	35	20	34	18.5	0.5

Environmental Conditions

2.5 Environmental Conditions

Table 10: Environmental Ratings

Operating Temperatures	-10°C to +40°C (14°F to 104°F)enclosed -10°C to +50°C (14°F to 122°F)open
Storage Temperatures	-20°C to +70°C (-4°F to 155°F)
Humidity	0% to 95% non condensing
Altitude	1000m (3300ft) without derating
Maximum Vibration	5.9m/s^2 (19.2ft/s^2) [0.6G]
Cooling	RC (Natural convection) RB (Bypassed)

⌘ **NOTE:** It is recommended that the starter be powered up once per year, for one hour continuously to avoid deterioration of electrolytic capacitors and subsequent starter failure.

Altitude Derating

2.6 Altitude Derating

Benshaw's starters are capable of operating at altitudes up to 3,300 feet (1000 meters) without requiring altitude derating. Table 11 provides the derating percentage to be considered when using a starter above 3,300 feet (1000 meters).

Table 11: Altitude Derating

Altitude		Percent Derating (Amps)
3300 Feet	1006 meters	0.0%
4300 Feet	1311 meters	3.0%
5300 Feet	1615 meters	6.0%
6300 Feet	1920 meters	9.0%
7300 Feet	2225 meters	12.0%
8300 Feet	2530 meters	15.0%
9300 Feet	2835 meters	18.0%

For derating above 10,000 feet consult Benshaw Inc.

Approvals

2.7 Approvals

MX^2 Control Card is UL, cUL Recognized

Certificate of Compliance

2.8 Certificate of Compliance

CE Mark, See Appendix D on page 198.

3 Installation

Before You Start

3.1 Before You Start

3.1.1 Inspection

Before storing or installing the RediStart MX^2 Series Starter, thoroughly inspect the device for possible shipping damage. Upon receipt:

- Remove the starter from its package and inspect exterior for shipping damage. If damage is apparent, notify the shipping agent and your sales representative.
- Open the enclosure and inspect the starter for any apparent damage or foreign objects. Ensure that all of the mounting hardware and terminal connection hardware is properly seated, securely fastened, and undamaged.
- Ensure all connections and wires are secured.
- Read the technical data label affixed to the starter and ensure that the correct horsepower and input voltage for the application has been purchased.
- The numbering system for a chassis is shown below.

3.1.2 Installation Precautions

Installation of some models may require halting production during installation. If applicable, ensure that the starter is installed when production can be halted long enough to accommodate the installation. Before installing the starter, ensure:

- The wiring diagram (supplied separately with the starter) is correct for the required application.
- The starter is the correct current rating and voltage rating for the motor being started.
- All of the installation safety precautions are followed.
- The correct power source is available.
- The starter control method has been selected.
- The connection cables have been obtained (lugs and associated mounting hardware).
- The necessary installation tools and supplies are procured.
- The installation site meets all environmental specifications for the starter NEMA/CEMA rating.
- The motor being started has been installed and is ready to be started.
- Any power factor correction capacitors (PFCC) are installed on the power source side of the starter and not on the motor side.

Failure to remove power factor correction or surge capacitors from the load side of the starter will result in serious damage to the starter that will not be covered by the starter warranty. The capacitors must be connected to the line side of the starter. The up-to-speed (UTS) contact can be used to energize the capacitors after the motor has reached full speed.

3.1.3 Safety Precautions

To ensure the safety of the individuals installing the starter, and the safe operation of the starter, observe the following guidelines:

- Ensure that the installation site meets all of the required environmental conditions (Refer to Site Preparation, page 29).
- LOCK OUT ALL SOURCES OF POWER.
- Install circuit disconnecting devices (i.e., circuit breaker, fused disconnect or non-fused disconnect) if they were not previously installed by the factory as part of the package.
- Install short circuit protection (i.e., circuit breaker or fuses) if not previously installed by the factory as part of the package.
- Consult Power Ratings for the fault rating on pages 18-20.
- Follow all NEC (National Electrical Code) and/or C.S.A. (Canadian Standards Association) standards or Local Codes as applicable.
- Remove any foreign objects from the interior of the enclosure, especially wire strands that may be left over from installation wiring.
- Ensure that a qualified electrician installs wiring.
- Ensure that the individuals installing the starter are wearing ALL protective eyewear and clothing.
- Ensure the starter is protected from debris, metal shavings and any other foreign objects.

The opening of the branch circuit protective device may be an indication that a fault current has been interrupted. To reduce the risk of electrical shock, current carrying parts and other components of the starter should be inspected and replaced if damaged.

Installation Considerations

3.2 Installation Considerations

3.2.1 Site Preparation

General Information

Before the starter can be installed, the installation site must be prepared. The customer is responsible for:

- Providing the correct power source.
- Providing the correct power protection.
- Selecting the control mechanism.
- Obtaining the connection cables, lugs and all other hardware
- Ensuring the installation site meets all environmental specifications for the enclosure NEMA rating.
- Installing and connecting the motor.

Power Cables

The power cables for the starter must have the correct NEC/CSA current rating for the unit being installed. Depending upon the model, the power cables can range from a single #14 AWG conductor to four 750 MCM cables. (Consult local and national codes for selecting wire size).

Site Requirements

The installation site must adhere to the applicable starter NEMA/CEMA rating. For optimal performance, the installation site must meet the appropriate environmental and altitude requirements.

3.2.2 EMC Installation Guidelines

General In order to help our customers comply with European electromagnetic compatibility standards, Benshaw Inc. has developed the following guidelines.

Attention This product has been designed for Class A equipment. Use of the product in domestic environments may cause radio interference, in which case the installer may need to use additional mitigation methods.

Enclosure Install the product in a grounded metal enclosure.

Grounding Connect a grounding conductor to the screw or terminal provided as standard on each controller. Refer to layout/power wiring schematic for grounding provision location.

Wiring Refer to Wiring Practices on page 31.

Filtering To comply with Conducted Emission Limits (CE requirement), a high voltage (1000V or greater) 0.1 uF capacitor should be connected from each input line to ground at the point where the line enters the cabinet.

3.2.3 Use of Power Factor Capacitors

Power factor correction capacitors and surge capacitors CAN NOT be connected between the starter and the motor. These devices can damage the SCRs during ramping. These devices appear like a short circuit to the SCR when it turns on, which causes a di/dt level greater than the SCR can handle. If used, power factor correction capacitors or surge capacitors must be connected ahead of the starter and sequenced into the power circuit after the start is completed. A programmable relay can be configured as an up-to-speed (UTS) relay and then used to pull-in a contactor to connect the capacitors after the motor has reached full speed.

⌘ **NOTE:** If the motor manufacturer supplies surge capacitors they must be removed before starting.

3.2.4 Use of Electro-Mechanical Brakes

If an electro-mechanical brake is used with the starter, it must be powered from the line side of the starter to ensure full voltage is applied to the brake during a start so it will properly release. A programmable relay can be configured as a run relay and then used to pull-in a contactor to power the brake whenever the starter is not providing power to the motor.

3.2.5 Reversing Contactor

If the application requires a reversing contactor, it should be connected on the output side (load) of the soft starter. The contactor must be closed before starting the soft starter. The soft starter must be off before switching the direction of the reversing contactor. The reversing contactor must never be switched while the soft starter is operating.

Mounting Considerations

3.3 Mounting Considerations

3.3.1 Bypassed Starters

Provisions should be made to ensure that the average temperature inside the enclosure never rises above 50°C. If the temperature inside the enclosure is too high, the starter can be damaged or the operational life can be reduced.

3.3.2 Non-Bypassed Starters

Provisions should be made to ensure that the temperature inside the enclosure never rises above 50°C. If the temperature inside the enclosure is too high, the starter can be damaged or the operational life can be reduced. As a general rule of thumb, the following ventilation guidelines can be followed.

Table 12: Ventilation Requirements

Current Range	Bottom of Enclosure	Top of Enclosure
< 200 amps	Fans or grills depending on enclosure size	
200 to 300 amps	2 x 4” grills (12 sq. in.)	2 x 4” grills (12 sq.in.)
301 to 400 amps	1 x 4” fan (115 cfm)	2 x 4” grills (12 sq.in.)
401 to 600 amps	2 x 4” fan (230 cfm)	2 x 6” grills (28 sq.in.)
601 to 700 amps	2 x 6” fan (470 cfm)	2 x 6” grills (28 sq.in.)
> 700 amps	Consult factory	Consult Factory

The starter produces 4 watts of heat per amp of current and 26 square inches of enclosure surface is required per watt of heat generation. Contact Benshaw and ask for the enclosure sizing technical note for more information concerning starters in sealed enclosures. Benshaw supplies starters under 124 amps non-bypassed, with the heat sink protruding from the back of the enclosure. This allows a small enclosure size while still maintaining the cooling capability of the starter.

Wiring Considerations

3.4 Wiring Considerations

3.4.1 Wiring Practices

When making power and control signal connections, the following should be observed:

- Never connect input AC power to the motor output terminals T1/U, T2/V, or T3/W.
- Power wiring to the motor must have the maximum possible separation from all other wiring. Do not run control wiring in the same conduit; this separation reduces the possibility of coupling electrical noise between circuits. Minimum spacing between metallic conduits containing different wire groups should be three inches (8cm).
- Minimum spacing between different wiring groups in the same tray should be six inches.
- Wire runs outside an enclosure should be run in metallic conduit or have shielding/armor with equivalent attenuation.
- Whenever power and control wiring cross it should be at a 90 degrees angle.
- Different wire groups should be run in separate conduits.
- With a reversing application, the starter must be installed in front of the reversing contactors.

⌘ **NOTE:** Local electrical codes must be adhered to for all wiring practices.

3.4.2 Considerations for Control and Power Wiring

Control wiring refers to wires connected to the control terminal strip that normally carry 24V to 115V and Power wiring refers to wires connected to the line and load terminals that normally carries 208VAC - 600VAC respectively. Select power wiring as follows:

- Use only UL or CSA recognized wire.
- Wire voltage rating must be a minimum of 300V for 230VAC systems and 600V (Class 1 wire) for 460VAC and 600VAC systems.
- Grounding must be in accordance with NEC, CEC or local codes. If multiple starters are installed near each other, each must be connected to ground. Take care to not form a ground loop. The grounds should be connected in a STAR configuration.
- Wire must be made of copper and rated 60/75°C for units 124 Amps and below. Larger amp units may use copper or aluminum wire. Refer to NEC table 310-16 or local codes for proper wire selection.

3.4.3 Considerations for Signal Wiring

Signal wiring refers to the wires connected to the control terminal strip that are low voltage signals, below 15V.

- Shielded wire is recommended to prevent electrical noise interference from causing improper operation or nuisance tripping.
- Signal wire rating should carry as high of a voltage rating as possible, normally at least 300V.
- Routing of signal wire is important to keep as far away from control and power wiring as possible.

3.4.4 Meggering a Motor

If the motor needs to be meggered, remove the motor leads from the starter before conducting the test. Failure to comply may damage the SCRs and WILL damage the control board, which WILL NOT be replaced under warranty.

3.4.5 High Pot Testing

Perform a DC high pot test if it is necessary to verify the insulation of the soft starter. The factory test voltage used is two and a half times the RMS voltage plus 1000VDC. It is recommended to test equipment that has been in service to 75% of the factory test voltage. The SCR gate leads must be removed from the control board to perform the high pot test. Remove the twisted red and white wire pairs labeled from 1 to 6 that connect on the right side of the control card. Failure to comply with the test voltage or removing the gate wiring may damage the control board which will not be replaced under warranty..

Power and Control Drawings for Bypassed and Non Bypassed Power Stacks

3.5 Power and Control drawings for Bypassed and Non Bypassed Power Stacks

Figure 8: Power Schematic for RB2 Low HP

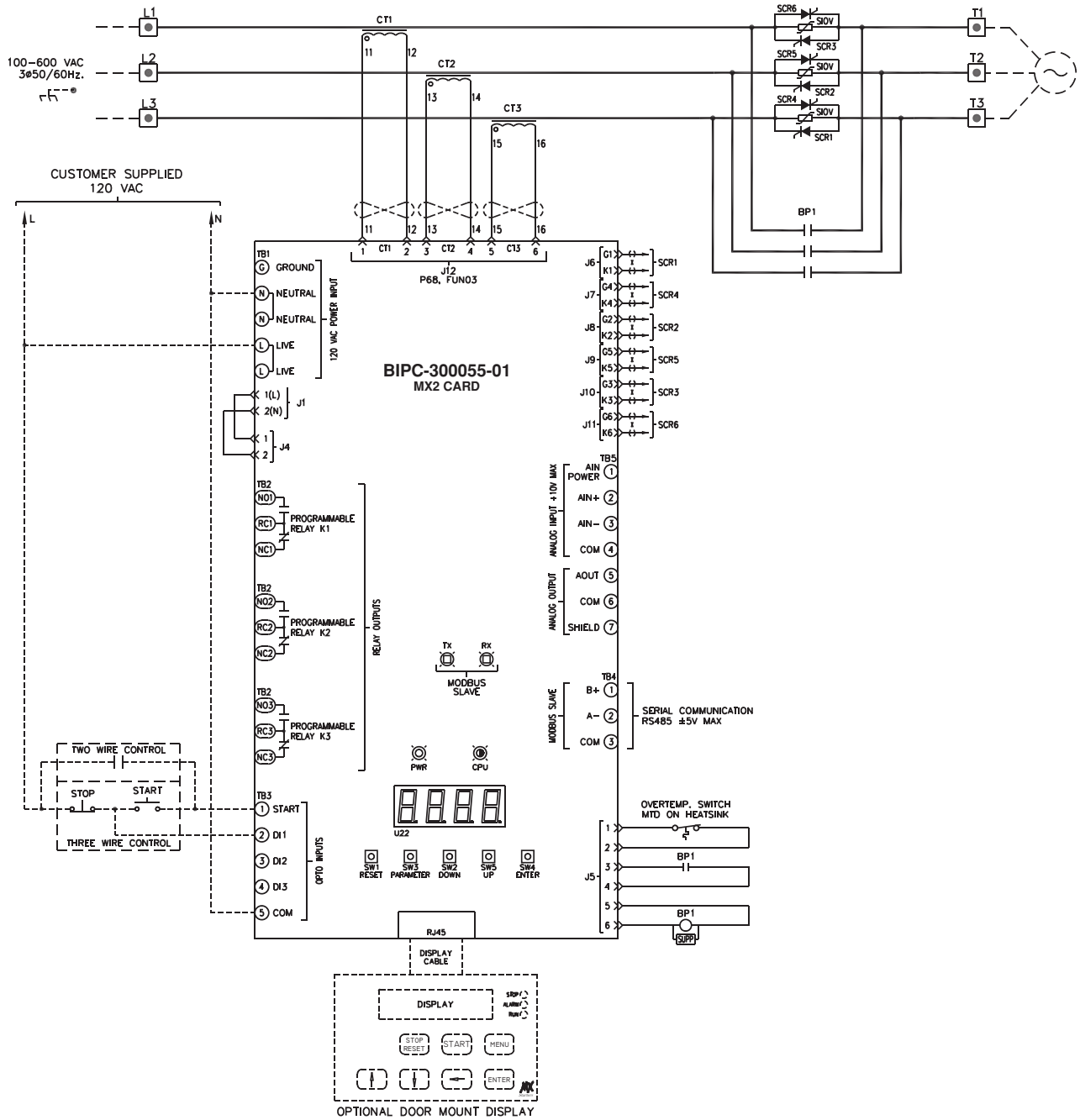

Figure 9: Power Schematic for RB2 High HP

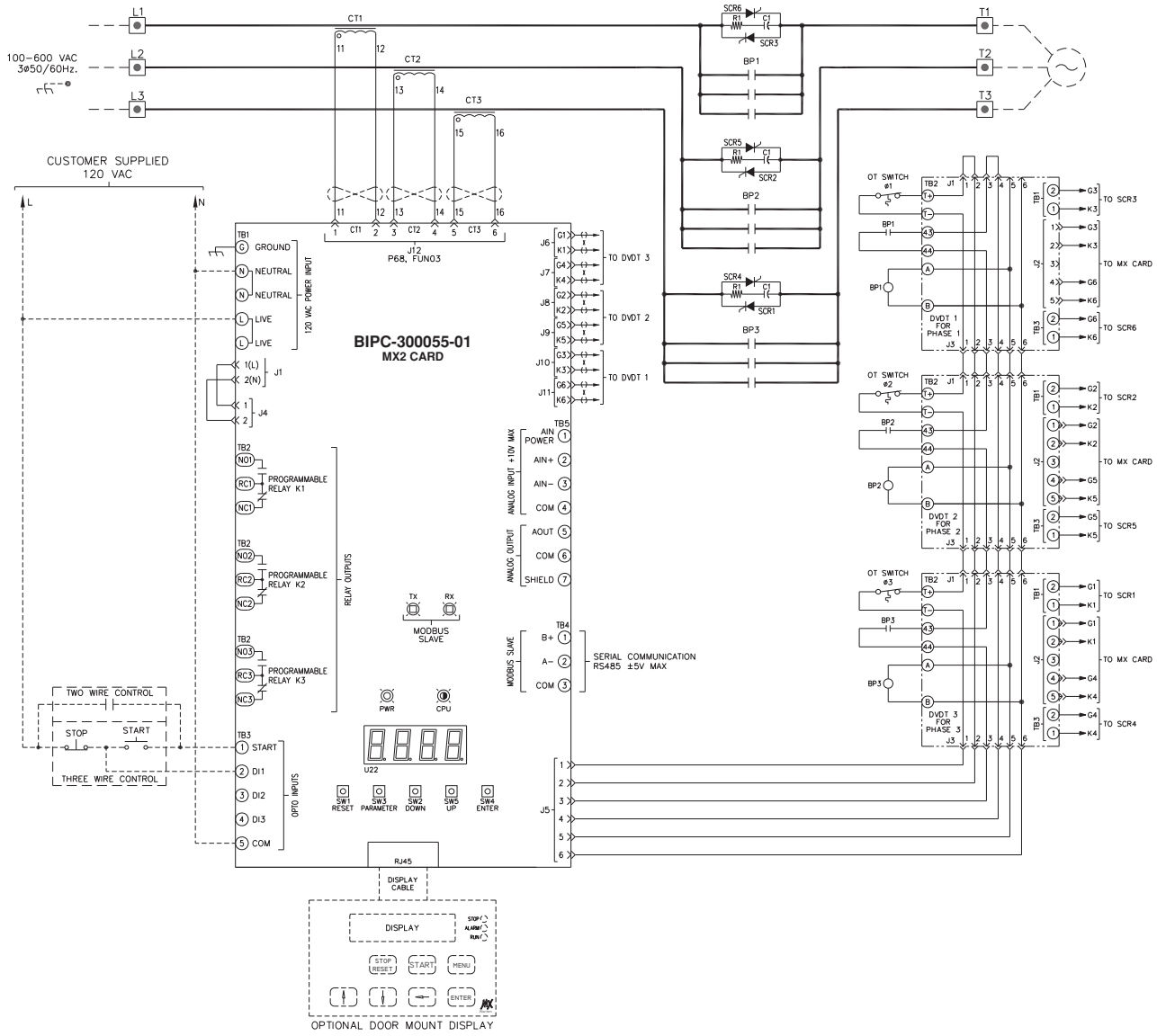

Figure 10: Power Schematic for RC2

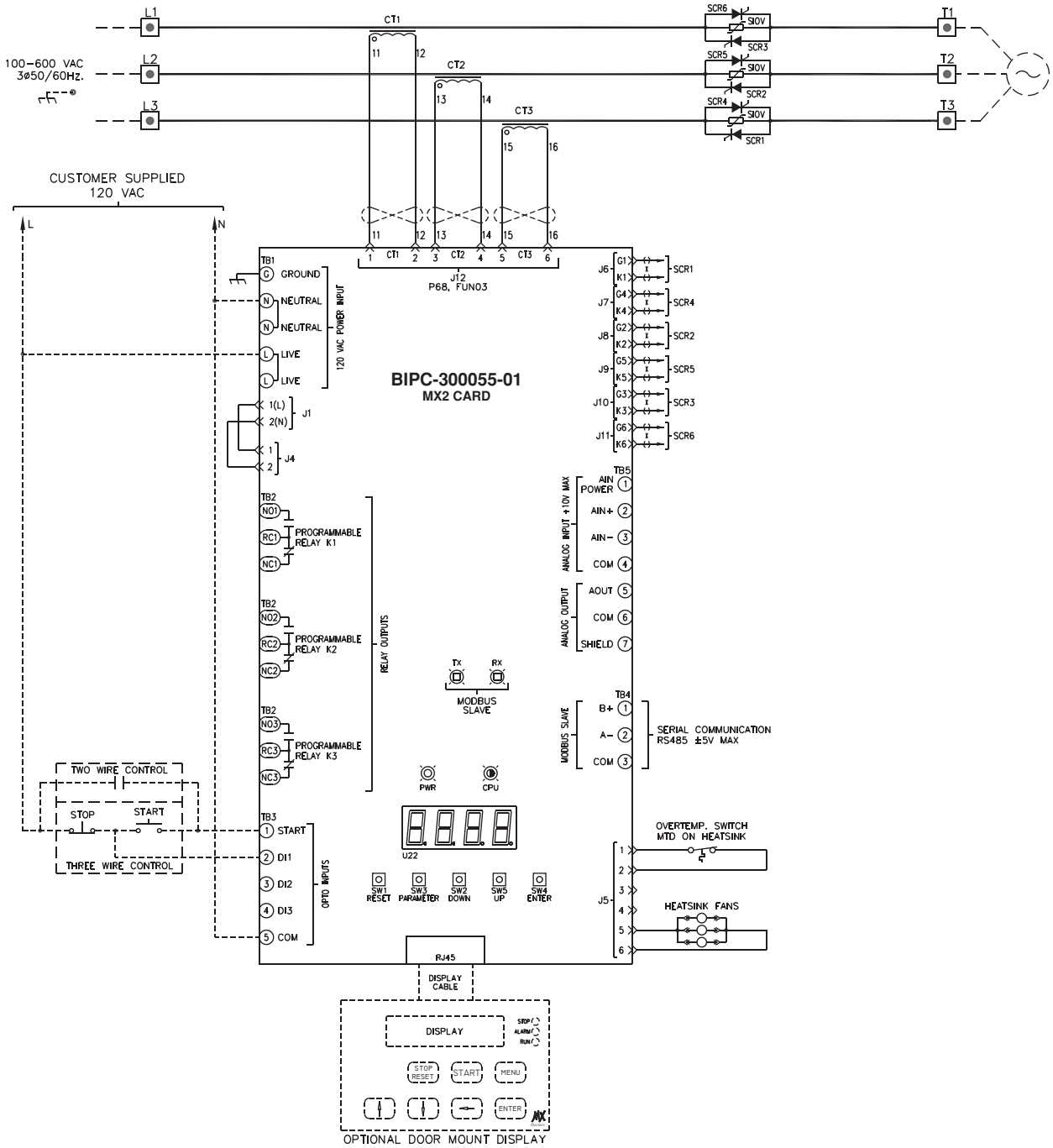

Power Wiring

3.6 Power Wiring

3.6.1 Recommended Incoming Line Protection

Fuses or Circuit Breaker, refer to pages 18 - 20.

Input Line Requirements
The input line source needs to be an adequate source to start the motor, generally 2 times the rating of the motor FLA. (This may not apply in some cases such as being connected to a generator).

3.6.2 Recommended Wire Gauges

The wire gauge selection is based on the FLA of the motor. Refer to NEC table 310-16 or CEC Part 1, Table 2 or local code requirements for selecting the correct wire sizing. Ensure appropriate wire derating for temperature is applied. If more than three current carrying conductors are in one conduit, ensure NEC table 310.15(B)(2) or CEC Part 1 Table 5C is adhered to. In some areas local codes may take precedence over the NEC. Refer to your local requirements.

3.6.3 Power Wire Connections

Attach the motor cables:

- Use the T1, T2 and T3 terminals. Use lugs/crimps or terminals (Lugs and Crimps are to be provided by the user).

Attach the power source cables:

- Use the L1, L2 and L3 terminals. Use lugs/crimps or terminals (Lugs and Crimps are to be provided by the user).

3.6.4 Motor Lead Length

The standard starter can operate a motor with a maximum of 2000 feet of properly sized cable between the “T” leads of the starter and that of the motor. For wire runs greater than 2000 feet contact Benshaw Inc. for application assistance. If shielded cable is used, consult factory for recommended length.

3.6.5 Compression Lugs

The following is a list of the recommended crimp-on wire connectors manufactured by Penn-Union Corp. for copper wire.

Table 13: Single Hole Compression Lugs

Wire Size	Part #	Wire Size	Part #
1/0	BLU-1/0S20	500 MCM	BLU-050S2
2/0	BLU-2/0S4	600 MCM	BLU-060S1
3/0	BLU-3/0S1	650 MCM	BLU-065S5
4/0	BLU-4/0S1	750 MCM	BLU-075S
250 MCM	BLU-025S	800 MCM	BLU-080S
300 MCM	BLU-030S	1000 MCM	BLU-100S
350 MCM	BLU-035S	1500 MCM	BLU-150S
400 MCM	BLU-040S4	2000 MCM	BLU-200s
450 MCM	BLU-045S1		

Table 14: Two Hole Compression Lugs

Wire Size	Part #	Wire Size	Part #
1/0	BLU-1/0D20	500 MCM	BLU-050D2
2/0	BLU-2/0D4	600 MCM	BLU-060D1
3/0	BLU-3/0D1	650 MCM	BLU-065D5
4/0	BLU-4/0D1	750 MCM	BLU-075D
250 MCM	BLU-025D	800 MCM	BLU-080D
300 MCM	BLU-030D	1000 MCM	BLU-100D
350 MCM	BLU-035D	1500 MCM	BLU-150D
400 MCM	BLU-040D4	2000 MCM	BLU-200D
450 MCM	BLU-045D1		

3.6.6 Torque Requirements for Power Wiring Terminations

Table 15: Slotted Screws and Hex Bolts

Wire size installed in conductor		Tightening torque, pound-inches (N-m)							
		Slotted head NO. 10 and larger				Hexagonal head-external drive socket wrench			
AWG or kcmil	(mm^2)	Slot width-0.047 inch (1.2mm) or less and slot length ¼ inch (6.4mm) or less		Slot width-over 0.047 inch (1.2mm) or slot length – over ¼ inch (6.4mm) or less		Split- bolt connectors (N-m)		Other connectors (N-m)	
18 – 10	(0.82 – 5.3)	20	(2.3)	35	(4.0)	80	(9.0)	75	(8.5)
8	(8.4)	25	(2.8)	40	(4.5)	80	(9.0)	75	(8.5)
6 – 4	(13.3 – 21.2)	35	(4.0)	45	(5.1)	165	(18.6)	110	(12.4)
3	(26.7)	35	(4.0)	50	(5.6)	275	(31.1)	150	(16.9)
2	(33.6)	40	(4.5)	50	(5.6)	275	(31.1)	150	(16.9)
1	(42.4)	—	—	50	(5.6)	275	(31.1)	150	(16.9)
1/0 – 2/0	(53.5 – 64.4)	—	—	50	(5.6)	385	(43.5)	180	(20.3)
3/0 – 4/0	(85.0 – 107.2)	—	—	50	(5.6)	500	(56.5)	250	(28.2)
250 – 350	(127 – 177)	—	—	50	(5.6)	650	(73.4)	325	(36.7)
400	(203)	—	—	50	(5.6)	825	(93.2)	375	(36.7)
500	(253)	—	—	50	(5.6)	825	(93.2)	375	(42.4)
600 – 750	(304 – 380)	—	—	50	(5.6)	1000	(113.0)	375	(42.4)
800 – 1000	(406 – 508)	—	—	50	(5.6)	1100	(124.3)	500	(56.5)
1250 – 2000	(635 – 1010)	—	—	—	—	1100	(124.3)	600	(67.8)

⌘ **NOTE** – For a value of slot width or length not corresponding to those specified above, the largest torque value associated with the conductor size shall be marked. Slot width is the nominal design value. Slot length is measured at the bottom of the slot.

Table 16: Tightening Torque for Inside Hex Screws

Socket size across flats		Tightening torque	
inches	**(mm)**	**Pound-inches**	**(N-m)**
1/8	(3.2)	45	(5.1)
5/32	(4.0)	100	(11.3)
3/16	(4.8)	120	(13.6)
7/32	(5.6)	150	(16.9)
¼	(6.4)	200	(22.6)
5/16	(7.9)	275	(31.1)
3/8	(9.5)	275	(42.4)
½	(12.7)	500	(56.5)
9/16	(14.3)	600	(67.8)
⌘ **NOTE** – For screws with multiple tightening means, the largest torque value associated with the conductor size shall be marked. Slot length shall be measured at the bottom of the slot.			

Current Transformers

3.7 Current Transformers

3.7.1 CT Mounting

For starters larger than 124 amps, the CTs are shipped loose from the power stack and need to be mounted on the power wiring. Thread the incoming lead through the CT with the polarity mark towards the line side. (The polarity marks may be a white or yellow dot, an "X" on the side of the CT, or the white wire.) Each phase has its own CT. The CT must then be attached to the power wiring, at least three inches from the power wire lugs, using two tie-wraps.

Figure 11: Typical CT Mounting, Input of Starter

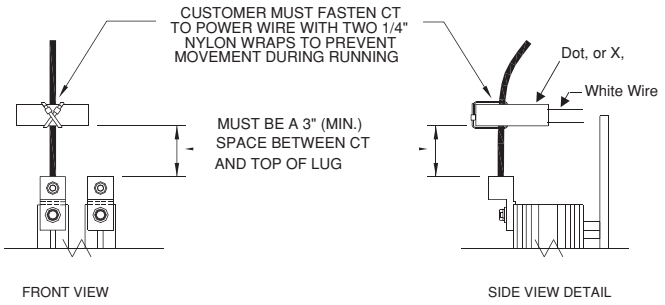

3.7.2 CT Polarity

The CT has a polarity that must be correct for the starter to correctly measure Watts, kW Hours, Power Factor, and for the Power and TruTorque motor control functions to operate properly.

Each CT has a dot on one side of the flat surfaces. This dot, normally white in color, must be facing in the direction of the line.

CT1 must be on Line L1, CT2 must be on Line L2, CT3 must be on Line L3.

Control Card Layout

3.8 Control Card Layout

Figure 12: Control Card Layout

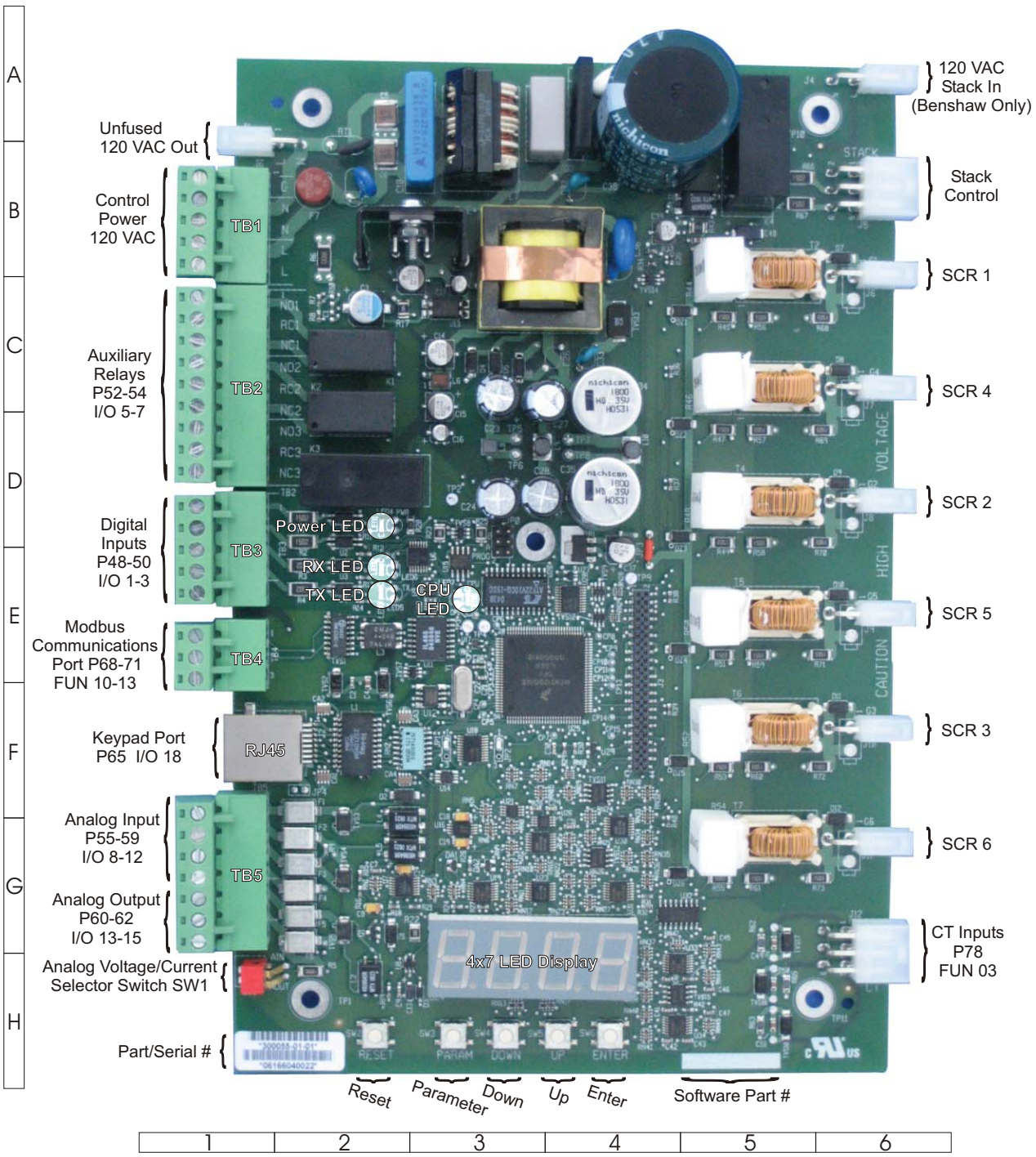

Control Wiring

3.9 Control Wiring

3.9.1 Control Power

The 120VAC control power is supplied to TB1. The connections are as follows:

1 - Ground
2 - Neutral
3 - Neutral
4 - Line (120VAC)
5 - Line (120VAC)

Figure 13: Control Power Wiring Example

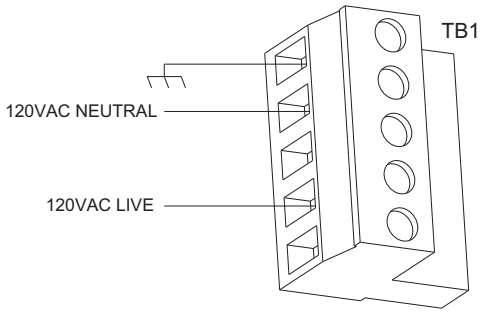

3.9.2 Output Relays

TB2 is for the output relays. The relays connect as follows:

1 - NO1: Relay 1 normally open
2 - RC1: Relay 1 common
3 - NC1: Relay 1 normally closed
4 - NO2: Relay 2 normally open
5 - RC2: Relay 2 common
6 - NC2: Relay 2 normally closed
7 - NO3: Relay 3 normally open
8 - RC3: Relay 3 common
9 - NC3: Relay 3 normally closed

Figure 14: Relay Wiring Examples

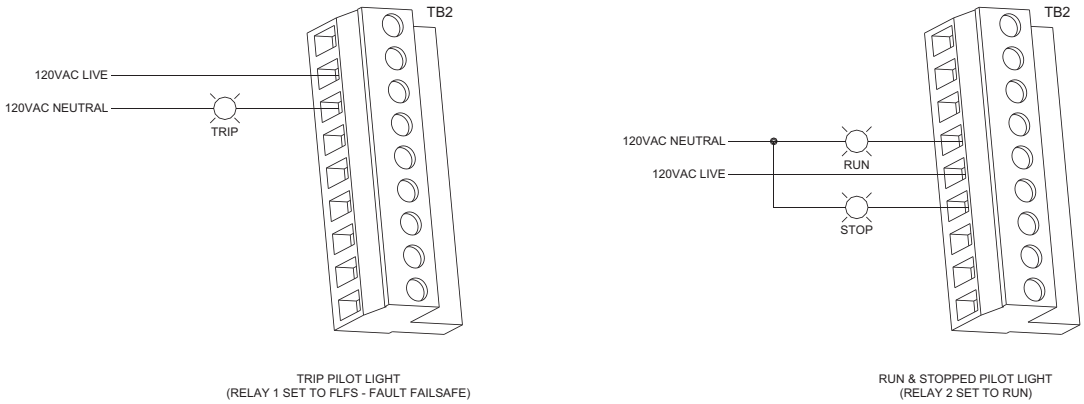

See Also Relay Output configuration (I/O 05 - 07) on page 112.

3.9.3 Digital Input Wiring Options

TB3 is for the digital inputs. The digital inputs use 120VAC. The digital inputs are as follows:

1 - Start: Start Input
2 - DI1: Digital Input 1
3 - DI2: Digital Input 2
4 - DI3: Digital Input 3
5 - Com: 120VAC neutral

Figure 15: Digital Input Wiring Examples

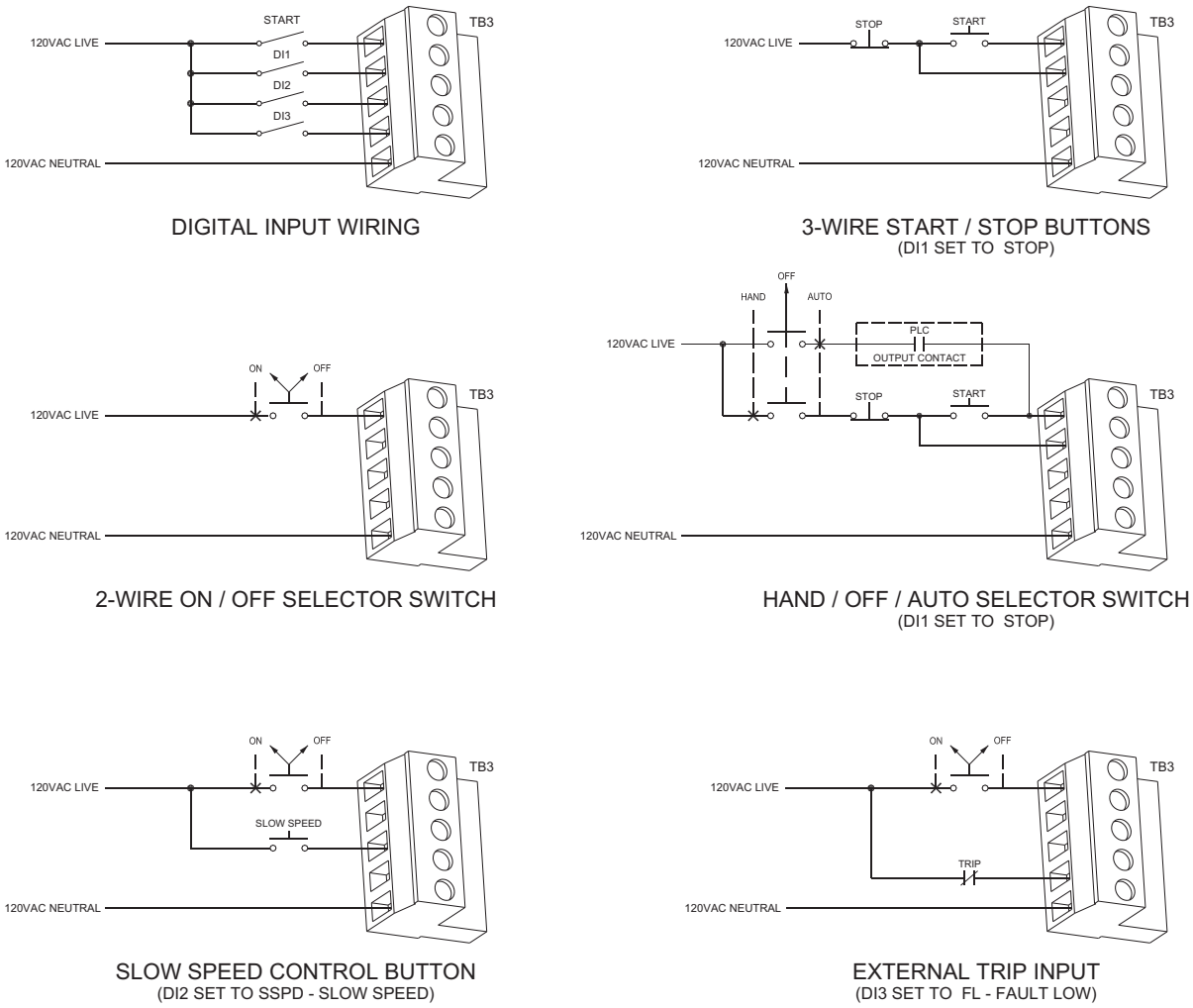

See Also Digital Input configuration (I/O 01 - 03) on page 110.

3.9.4 Analog Input

The analog input can be configured for voltage or current loop. The input is shipped in the voltage loop configuration unless specified in a custom configuration. Below TB5 is SW1-1. When the switch is in the on position, the input is current loop. When off, it is a voltage input. The control is shipped with the switch in the off position. See Figure 18.

⌘ **NOTE:** The analog input is a low voltage input, maximum of 15VDC. The input will be damaged if control power (115VAC) or line power is applied to the analog input.

The terminals are as follows:

1) +10VDC Power (for POT)
2) + input
3) - input
4) common
7) shield

Figure 16: Analog Input Wiring Examples

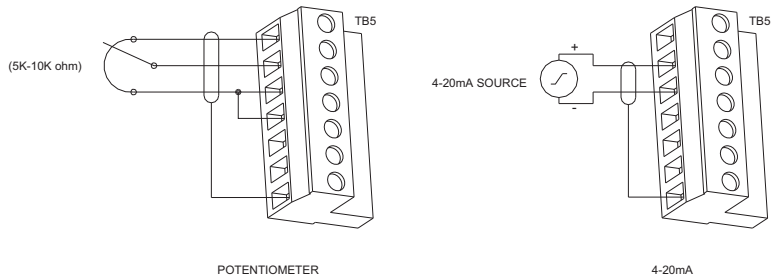

See Also Analog Input (I/O 08 - 12) on page 113.
Starter Type parameter (FUN 07) on page 124.
Theory of Operation section 7.11, Phase Control on page 165.
Theory of Operation section 7.12, Current Follower on page 167.

3.9.5 Analog Output

The analog output can be configured for Voltage or Current loop. The output is shipped in the Voltage loop configuration unless specified in a custom configuration. Below TB5 is SW1-2. When the switch is in the off position, the output is current. When on, it is a Voltage loop output. The control is shipped with the Switch on. See Figure 18.

⌘ **NOTE:** The analog output is a low voltage output, maximum of 15VDC. The output will be damaged if control power (115VAC) or line power is applied to it.

The terminals are as follows:

5 - analog output
6 - common
7 - shield

Figure 17: Analog Output Wiring Example

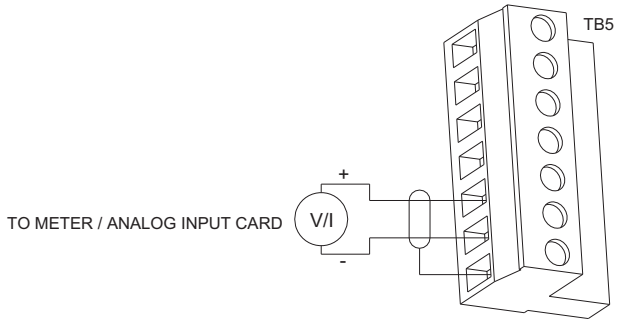

See Also Analog Output configuration (I/O 13 - 15) on page 116.

3.9.6 SW1 DIP Switch

The DIP switch on the card changes the analog input and analog output between 0-10V or 0-20mA. The picture below shows how to adjust the switch to select the desired signal. Switching to the up or top position is ON and switching towards card or down is OFF.

Figure 18: DIP Switch Settings

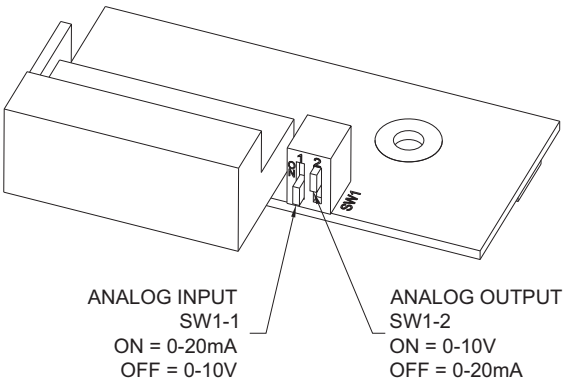

Remote LCD Keypad/Display

3.10 Remote LCD Keypad/Display

The display has a NEMA 13/IP65 service rating. The display is available in 2 versions, a small display as P/N KPMX3SLCD and large display as P/N KPMX3LLCD.

3.10.1 Remote Display

The MX^2 control has one of two types of keypads, either a LED display or a LCD display. As standard, a LED display is permanently mounted on the control board. The LCD keypad is optional and is mounted remotely from the MX^2 Control card via a straight through CAT5 ethernet cable which connects between the MX^2 RJ45 terminal and remote display's RJ45 terminal.

3.10.2 Display Cutout

Figure 19: Small Display Keypad Mounting Dimensions
Part # : KPMX3SLCD

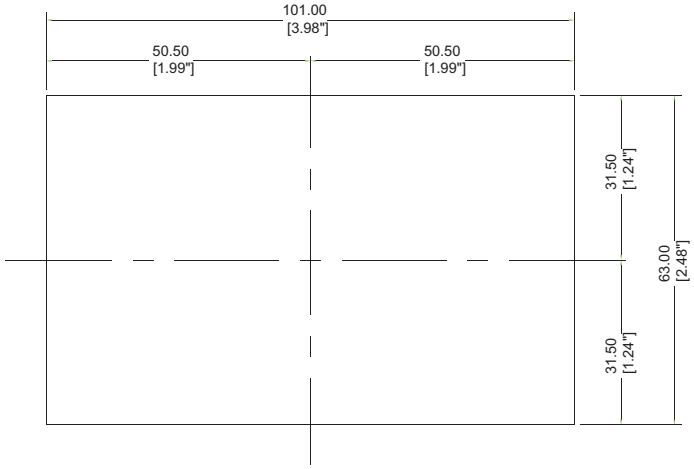

Figure 20: Large Display Keypad Mounting Dimensions
Part # : KPMX3LLCD

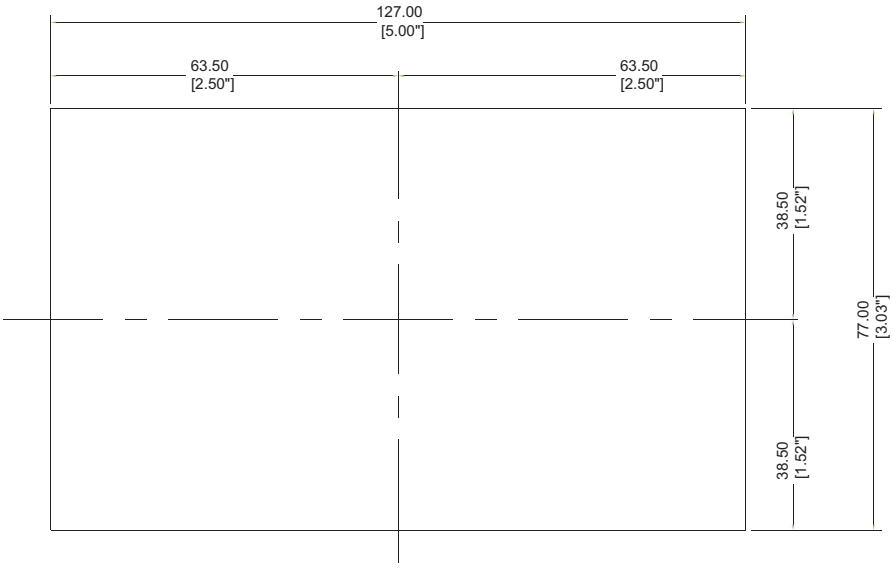

3.10.3 Installing Display

The remote display is installed as follows:

- Install the gasket onto the display.
- Insert the display through the door cutout.
- Insert the mounting clips into the holes in each side of the display.
- Tighten the mounting clips until they hold the display securely in place. Torque requirements for the display screen is 0.7 NM (6.195 in lbs).
- Plug the cable into the display connector on the MX^2 card. See Figure 12 – Control Card Layout on page 39 for the connector location.
- Route the cable through the enclosure to the display. Observe the wiring considerations as listed in section 3.4.3 on page 31.
- Plug the other end of the cable into the LCD display.

⌘ NOTE: At temperatures less than -20°C, the LCD contrast may be impaired.

Figure 21: Mounting Remote Keypads

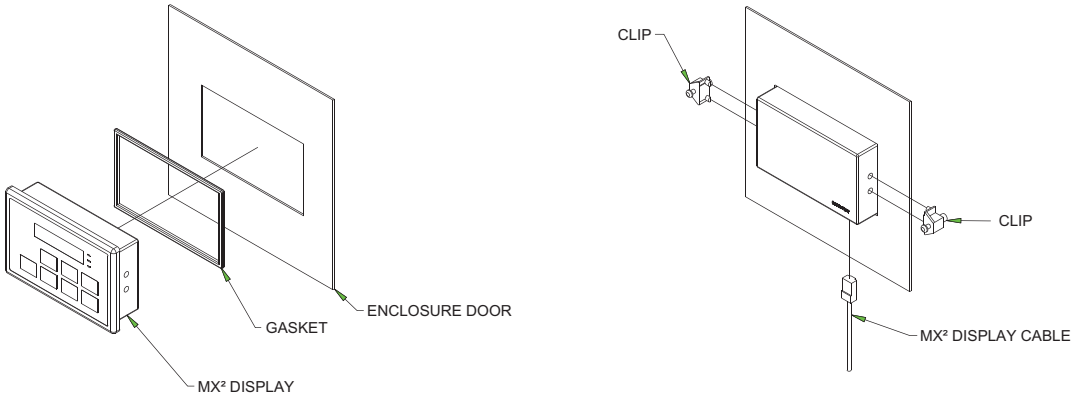

NOTES:

4 Keypad Operation

Introduction

4.1 Introduction

The MX^2 provides a comprehensive set of parameters to allow the use of the reduced voltage solid state starter in nearly any industrial application. While the starter can meet the requirements of many applications right out of the box, customization of parameter values to better suit your particular application is easily accomplished with the standard, on-board, 4-digit, 7-segment LED display/keypad.

The MX^2 has an optional 2x16 character, back-lit LCD display/keypad that may be mounted remotely from the MX^2 control card. The remote LCD keypad has the same keys as the standard display with several additional keys including start and stop keys for operation of the starter from the keypad. When the remote LCD keypad is connected, the local display is disabled.

Standard Keypad and Display

4.2 Standard Keypad and Display

The LED display provides information on starter operation and programming. The 4-digit, 7-segment display shows starter meter outputs and programming data. Special symbols provide further information about the starter operation (see the following section).

Figure 22: The Standard Keypad and Display

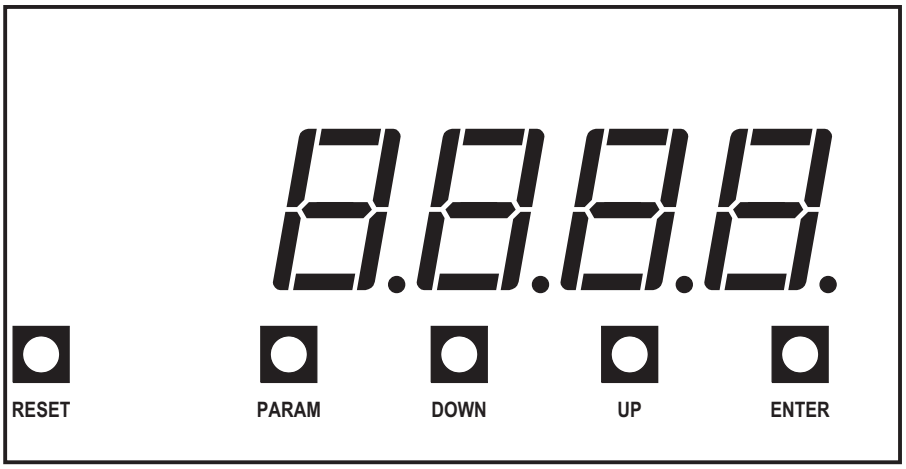

Viewing Parameter Values for the Standard Keypad

4.3 Viewing Parameter Values for the Standard Keypad

Parameter view mode can be entered by:

1. At the default meter display, press the [PARAM] key to enter parameter mode. "P1" is displayed to indicate Parameter 1.
2. Use the [UP] and [DOWN] keys to scroll through the available parameters.
3. Pressing the [UP] key from "P 1" advances to parameter "P 2".
4. Pressing the [DOWN] key from "P1" wraps around to the highest parameter.
5. The value of the parameter can be viewed by pressing the [ENTER] key.
6. To view another parameter without changing/saving the parameter, press the [PARAM] key to return to the parameter number display.

To return to the default meter display either:

1. Press the [PARAM] key while in the parameter number display mode.
2. Wait 60 seconds and the display returns to the default meter display.

Changing Parameter Values

4.4 Changing Parameter Values

Parameter change mode can be entered by:
1. At the default meter display, press the [PARAM] key to enter parameter mode.
2. Use the [UP] and [DOWN] keys to scroll through the available parameters.
3. The value of the parameter can be viewed by pressing the [ENTER] key.
4. When viewing the parameter value, the parameter can be changed by using the [UP] and [DOWN] keys.
5. To store the new value, press the [ENTER] key. When the [ENTER] key is pressed the value is saved and the display goes back to parameter # "P_".

To exit parameter change mode without saving the new parameter value either:
1. Press the [PARAM] key to return to the parameter number display.
2. Wait 60 seconds and the display returns to the default meter display.

Messages Displayed

4.5 Messages Displayed

In addition to being able to view and change parameters, various special messages may be displayed during different conditions. Here is a summary of the possible special messages.

noL	No Line	AbC	Phase order meter showing ABC
rdY	Ready	CbA	Phase order meter showing CBA
Acc	Accelerating or Kicking	SPH	Phase order meter showing Single Phase
Acc2	Accelerating or Kicking with ramp 2	oxxx	xxx = overload content.
utS	Up to Speed	P xx	xx = Parameter code.
run	Run - Done with Accel ramp but not yet Up to Speed	A xx	xx = Alarm code. If the condition persists, a fault occurs.
dcL	Decelerating Motor	F xx	xx = Fault code.
A OL	Overload Alarm - The motor overload level is between 90% and 100%	ioc	Instantaneous Over current
F OL	Overload Fault - The motor overload level has reached 100%	dFLt	Default – Flashes when parameter defaults are loaded.
		HEAt	Heater/Anti-windmill Mode
L OL	Overload Lockout - A start is not allowed until the motor overload level cools below 15%.	ES	Energy Saver
		FLSH	In reflash mode
L CP	Control Power Lockout - A start is not allowed because the control power is too low.	ProG	In reflash mode, programming
		rEAd	In reflash mode, verifying
LOC	Lock out State	donE	In reflash mode, complete
SSPd	Slow Speed Motor Operation	L dS	Disconnect Switch Open
L Ot	Power Stack Over Temperature Lockout	dcb	DC Injection Brake Active
SS r	Slow Speed Reverse	SS F	Slow Speed Forward
L I r	Digital Inputs (Run Enable or Run Disable) are preventing the starter from running		

The following sections provide more detail for some of the conditions that cause special messages to be displayed.

4.5.1 Power Up

The software version is displayed as a series of single digits once power has been applied to the MX^2. If the parameters were being reset on power up, “dFLt” is flashed on the display for three seconds, and then the software version is displayed.

4.5.2 Stopped

When the starter is not in the run mode, the display shows the status condition of the starter, such as “rdY” (ready), “L OL” (Overload Lockout), or “noL” (No Line).

4.5.3 Running

When running, the display shows the selected meter function. The following meters can be selected using the Meter display parameter (P79).

Avg. RMS current	Avg. Voltage (RMS)	KW	Line Frequency	TruTorque %
Phase 1 RMS current	L1-L2 Voltage (RMS)	KVA	Analog Input %	Power %
Phase 2 RMS current	L2-L3 Voltage (RMS)	VARS	Analog Output %	Last Start Time
Phase 3 RMS current	L3-L1 Voltage (RMS)	KWh	Running Time Days	Peak Start Current
Current Imbalance %	Overload %	MWh	Running Time Hours	
GF Current (% FLA)	Power Factor	Phase Rotation	Starts	

4.5.4 Alarm Condition

When an alarm condition exists, the display alternates between displaying the selected meter and the alarm code. The alarm code is displayed as “A XX”, where XX is the alarm code.

- When a thermal overload alarm condition exists, “A OL” is displayed.
- When a no line alarm condition exists, “noL” is displayed.

When the starter is stopped, the selected meter is not displayed.

4.5.5 Lockout Condition

When a lockout condition exists, the display shows the lockout code. The lockout code is displayed as “L XX”: where XX is the lockout code. Following are the defined lockout conditions and their codes:

- When a motor thermal overload lockout condition exists, “L OL” is displayed.
- When a power stack thermal overload lockout condition exists, “L Ot” is displayed.
- When a low control power lockout condition exists, “L CP” is displayed.
- When either Run Enable or Run Disable input are preventing the starter from running.

When there are multiple lockout codes, each is displayed at 2 second intervals.

4.5.6 Faulted Condition

When a fault condition exists, the display shows the fault code. The exceptions to this are as follows:

- When the fault is thermal overload trip, “F OL” is displayed.
- When the fault is Instantaneous Over current, “ioc” is displayed.

4.5.7 Quick Meters

Although any meter may be viewed by changing the Meter parameter (P79), there are 3 “Quick Meters” that are always available with a single key press. When the starter is in the normal display mode, the display may be toggled between the information currently displayed and the following quick meters.

Status Meter Toggle between the programmed meter display and the starter operational status display (rdY, run, utS, dcL, etc) by pressing the [ENTER] key.

Overload Meter Toggle between the programmed meter display and the overload content by pressing the [DOWN] key. The overload is displayed as “oXXX” where XXX is the overload content. For example, when the overload content is 76 percent, it is displayed as “o 76”.

Phase Order Meter Toggle between the programmed meter display and the phase order by pressing the [UP] key. The phase order is displayed as “AbC” or “CbA”.

Restoring Factory Parameter Settings

4.6 Restoring Factory Parameter Settings

To restore ALL parameters to the factory default settings, press and hold the [PARAM] and [ENTER] pushbutton switch on power up. The display blinks “dFLt”. Parameters unique to the motor starter applications need to be set again to appropriate values before motor operation.

P76 / FUN05 - Rated RMS Voltage (set to specified equipment rating)
P78 / FUN03 - CT Ratio (set to supplied CTs rating)
P48 / I/O01 - Digital Input #1
P49 / I/O02 - Digital Input #2
P50 / I/O03 - Digital Input #3
P52 / I/O05- Relay #1
P53 / I/O06 - Relay #2
P54 / I/O07 - Relay #3

⌘ **NOTE: You must consult the wiring schematic for digital inputs and relay output configuration.**

Resetting a Fault

4.7 Resetting a Fault

To reset from a fault condition, press [RESET].

Emergency Overload Reset

4.8 Emergency Overload Reset

To perform an emergency overload reset, press [RESET] and [DOWN]. This sets the motor thermal overload content to 0.

An alternative to this is to use a digital input:
For LED display P48, P49 or P50 EOLr (E OL Reset).
For LCD display: I/O 01, I/O 02 or I/O 03 EOLreset (E OL Reset).
See page 110: I/O Digital Input Configuration for more information.

Remote LCD Keypad and Display

4.9 2x16 Remote LCD Keypad

Like the standard keypad, the remote LCD keypad has the same basic functions with enhancements that allow using plain text instead of codes and a menu structure instead of a straight line of parameters.

Additional keys have been added, such as [START], [STOP], and a [LEFT] arrow for moving the cursor around in the LCD display. Status indicators have been added, providing additional information for the starter operation.

The remote keypad is NEMA 13/IP65 when mounted directly on the door of an enclosure with the correct gasket.

Figure 23: Remote LCD Keypad

Description of the LEDs on the Keypad

4.10 Description of the LEDs on the Keypad

The keypad provides three LED indicators in addition to the 2x16 character display. The LEDs provide starter status information.

Table 17: Remote Keypad LED Functions

LED	State	Indication
STOP	On	Stopped
	Flashing	Faulted
RUN	On	Running and up-to-speed
	Flashing	Running and not up-to-speed (ramping, decelerating, braking etc).
ALARM	Flashing	Alarm condition exists. If condition persists, a fault occurs.

⌘ **NOTE:** By default, the [STOP] key is always active, regardless of selected control source (Local Source and Remote Source parameters). It may be disabled though using the Keypad Stop Disable (P65 / I/O 18) parameter. For more information refer to the Keypad Stop Disable (P65 / I/O 18) parameter on page 119.

Description of the Keys on the Remote LCD Keypad

4.11 Description of the Keys on the Remote LCD Keypad

The [UP] arrow, [DOWN] arrow, [ENTER] and [MENU] keys on the LCD keypad perform the same functions as the [UP], [DOWN], [ENTER] and [PARAM] keys on the standard keypad. Three keys have been added, with one of the keys serving a dual function.

Table 18: Function of the Keys on the LCD Keypad

Key	Function
start	• This key causes the starter to begin the start sequence. The direction is dependent on wiring and phase selection. • In order for this key to work, the Local Source (QST 04) parameter must be set to "Keypad".
⇧	• Increase the value of a numeric parameter. • Select the next value of an enumerated parameter. • It scrolls forward through a list of parameters within a group (when the last parameter is displayed, it scrolls to the beginning of the list). • When a list of faults is displayed, it moves from one fault to the next. • When the starter is in the Operate Mode, pressing [UP] allows you to change which group of meter values is monitored.
⇩	• Decrease the value of a numeric parameter. • Select the previous value of an enumerated parameter. • It scrolls backward through a list of parameters within a group (when the first parameter is displayed, it scrolls to the end of the list). • When a list of faults is displayed, it moves from one fault to the previous fault. • When the starter is in the Operate Mode, pressing [DOWN] allows you to change which group of meter values is monitored.
⇦	• When editing a numeric parameter, the [LEFT] arrow key moves the cursor one digit to the left. If cursor is already at the most significant digit, it returns to the least significant digit on the right. • When in Menu mode, the [LEFT] arrow allows groups to be scrolled through in the opposite direction of the [MENU] Key.
enter	• Allows editing a parameter. Stores the change of a parameter. • When in Fault History, [ENTER] key scrolls through information logged when a fault occurred. • When an alarm condition exists, [ENTER] scrolls through all active alarms.
menu	• [MENU] scrolls between the operate screen and the available parameter groups. • When viewing a parameter, pressing [MENU] jumps to the top of the menu. • When a parameter is being edited and [MENU] is pressed, the change is aborted and the parameter's old value is displayed.
stop reset	• The [STOP/RESET] key halts the operation of the starter (Stop Key). • If a fault has occurred, the [STOP/RESET] key is used to clear the fault. • The [STOP] key may be disabled using the Keypad Stop Disable (I/O 18) parameter, if the control source (QST 04/QST 05) is not set to "Keypad". The [STOP/RESET] key always halts the operation of the starter if the control source is set to "Keypad". If the control source (QST 04/QST 05) is not set to "Keypad".

Jump Code

4.12 Jump Code

At the beginning of each parameter group, there is a Jump Code parameter. By changing the value of this parameter and pressing [ENTER], you can jump directly to any parameter within that group.

Alphanumeric Display

4.13 Alphanumeric Display

The remote LCD keypad and display uses a 32-character alphanumeric LCD display. All starter functions can be accessed by the keypad. The keypad allows easy access to starter programming with parameter descriptions on the LCD display.

Power UP Screen
On power up, the software part number is displayed for five seconds. Pressing any key immediately changes the display to the operate screen.

```
810023-01-08
```

Operate Screen
The operate screen is the main screen. The Operate screen is used to indicate the status of the starter, if it's running, what state it's in, and display the values of Meter 1 and Meter 2, which are selectable.

The Operate Screen is divided into five sections.

- Sections A and B display status information
- Section C and D displays the meter selected by the Meter 1 and 2 parameters, see FUN 01, 02.
- Section S displays the source for the start command.

Figure 24: Operate Screen

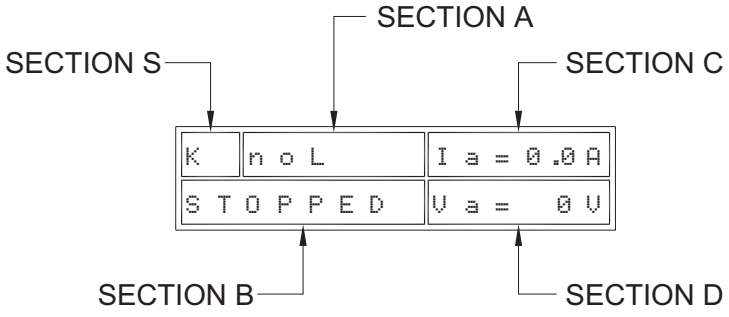

Table 19: Operate Screen Section A

Display	Description
NoL	L1, L2, L3 not present
Ready	Starter ready to run
Alarm	A fault condition is present. If it continues, a fault occurs
Run	Starter is running

Table 20: Operate Screen Section B

Display	Description
Stopped	Starter is stopped and no Faults
Fault	Starter tripped on a Fault
Heater	Starter is on and heating motor
Kick	Starter is applying kick current to the motor
Accel	Starter is accelerating the load
Kick 2	Starter is applying kick current to the motor in Ramp 2
Accel 2	Starter is accelerating the load in Ramp 2
Run	Starter is in Run mode and Ramp Time has expired
UTS	Starter is Up To Speed
Control	Phase Control or Current Follower mode
Decel	Starter is decelerating the load
Wye	In Wye-delta control indicates motor is accelerating in Wye mode
Slow Spd Fwd	Preset slow speed forward
Slow Spd Rev	Preset slow speed reverse
Braking	DC Injection Braking.
Lockout	Starter is Locked Out

Table 21: Operate Screen Section S

Display	Description
K	Keypad Control
T	Terminal Block Control
S	Serial Communication Control

4.13.1 Parameter Group Screens

From the operate screen, the parameter group screens are accessed by pressing either the menu or the left arrow keys. The parameter group screens display the different parameter groups; QST, CFN, PFN, I/O, FUN, FL_.

```
MMM: PPPPPPPPPP
MI VVVVVVVVVV
```

MMM: = Parameter Group
MI: = Menu Index
PPP: = Parameter Name
VVV: = Parameter Value and Units
Refer to Chapter 5 for a listing of the parameters and their ranges.

4.13.2 Meter Pages

Although any meter may be viewed by changing the two Meter parameters (FUN 01 & FUN 02), there are 13 "Meter Pages" that are easily accessed to view all of the meter information. These meter pages are scrolled through by pressing the [UP] or [DOWN] down arrows from the operate screen.

```
Current I2= 0.0A
I1= 0.0  I3= 0.0A
```

```
Voltage V2=   0V
V1=   0 V3=   0V
```

```
MWatt Hour=   0
kWatt Hour=   0
```

```
Watts     =   0
VA        =   0
```

```
Motor PF  =0.00
vars      =   0
```

```
TruTorque =   0%
Power     =   0%
```

```
Overload  =    0%
CurrInbal  =  0.0%
```

```
RSGndCur= 0%
```

```
Lst STt Tim= xx.xs
Pk ST Cur  = xx.xA
```

```
Frequency = 60.0H
Phase     = AbC
```

```
Run Days  =   xxxx
Run Hours =xx:xx
```

```
Analog In  = 0.0%
Analog Out= 0.0%
```

```
Starts    =   xxxxx
```

⌘ **NOTE:**

Run Hours	00:00 – 23:59
Run Days	0 – 2730 days or 7.5 years
kWatt Hours	0 – 999
MWatt Hours	0 – 9999
Starts	0 – 65535

4.13.3 Fault Log Screen

More information regarding each fault is available through the remote MX^2 LCD display than is available through the standard MX^2 LED display.

```
FL#:Fault##
NNNNNNNNNNNNN
```

FL _: = Fault Log Number. FL1 is the most recent fault and FL9 is the oldest fault.
Fault _ _ = Fault Code
NNN… = Fault Name, or the condition when the fault occurred.

Press [MENU] until you get to the FL1 parameter.

Pressing the [UP] and [DOWN] keys navigates through older and newer faults in the log.

Repeatedly pressing the [ENTER] key rotates through the conditions the starter was in when the fault occurred.

Enter Step	
1	Fault Description.
2	Status when the fault occurred, Run, Stopped, Accel. etc.
3	The L1 current at the time of the fault.
4	The L2 current at the time of the fault.
5	The L3 current at the time of the fault.
6	L1-2 voltage at the time of the fault.
7	L2-3 voltage at the time of the fault.
8	L3-1 voltage at the time of the fault.
9	kW at the time of the fault.
10	Frequency at the time of the fault.
11	Run time since last run time reset.

4.13.4 Fault Screen

When a Fault occurs, the main screen is replaced with a fault screen. The screen shows the fault number and the name of the fault. The main status screen is not shown until the fault is reset.

When a fault occurs, the STOP LED flashes.

```
Fault##
Fault Name
```

⌘ **NOTE**: For a list of the Faults, refer to Appendix B - Fault Codes on page 196.

4.13.5 Lockout Screen

When a lockout is present, one of the following screens will be displayed. The main status screen is not shown until the lockout is cleared.

The overload lockout displays the overload content and the time until reset if an overload occurs.

```
Overload Lockout
96%          XX:XX
```

The stack over temperature lockout will be displayed if a stack over temperature is detected

```
Stack Overload
Lockout
```

The control power lockout will be displayed if the control power is not within specifications.

```
Control Power
Lockout
```

The disconnect open lockout will be displayed if a digital input is programmed to "disconnect" and the input if off.

```
Disconnect Open
Lockout
```

A "Run Enable or Run Disable" digital input is set and is not true. See digital inputs on page 110

```
Run Interlock
Lockout
```

4.13.6 Alarm Screen

When an alarm is present, the word “Alarm” is displayed on the operate screen. Pressing the [ENTER] key displays more information about the alarm.

```
Alarm Number
Alarm Name
```

Procedure for Setting Data

4.14 Procedure for Setting Data

Select a parameter that is to be changed. To change Motor FLA from 10 Amps to 30 Amps:

From the main screen:

```
T Ready Ia=0.0A
Stopped Va=480V
```

Press [MENU] key and the display shows QST: (Quick Start) screen.

```
QST:Jump Code
00  1
```

Press [UP] key once to Motor FLA (QST 01).

```
QST: Motor FLA
01  10Amp
```

Press [ENTER] key once, the cursor starts to flash in the one's place.

```
QST: Motor FLA
01  10Amp
```

Press [LEFT] key once, the cursor flashes in the ten's place.

```
QST: Motor FLA
01  10Amp
```

Press [UP] arrow to increase the value, for a value of 30, press twice.

```
QST: Motor FLA
01  30Amp
```

Press [ENTER] to store the value.

```
QST: Motor FLA
01  30Amp
```

Press [UP] arrow to change another parameter in QST.
Press [MENU] to change another parameter in another group.
Press [LEFT] arrow to go back to the main screen

5 Parameter Groups

5 - PARAMETER GROUPS

Introduction

5.1 Introduction

The MX^2 incorporates a number of parameters that allow you to configure the starter to meet the special requirements of your particular application. The parameters are organized two ways, depending on the display being used. When the standard, on-board LED display is used, the parameters are in a single group and numbered P1, P2, P3… etc.

When the remote LCD display is used, the parameters are divided into groups of related functionality, and within the groups the parameters are identified by a short, descriptive name. The parameters are subdivided into six groups. The groups are **QST** (Quick Start), **CFN** (Control Functions), **PFN** (Protection Functions), **I/O** (Input/Output Functions), **FUN** (Function) and **FL1** (Faults) .

The Quick Start Group provides a collection of the parameters that are most commonly changed when commissioning a starter. Many of the parameters in the Quick Start group are duplicates of the parameters in the other groups.

This chapter lists all of the parameters and their possible values. Section 5.3 lists the parameters in the order in which they appear on the LED display. Section 5.4 lists them in the order in which they appear on the LCD display. Section 5.2 is a cross-reference between the two.

LED & LCD Display Parameters Cross Reference

5.2 LED and LCD Display Parameters Cross Reference

Parameter Number	Group	Parameter Name	Page #	Parameter Number	Group	Parameter Name	Page #
P1	QST 01	Motor FLA	75	P42	PFN 11	Auto Reset Limit	104
P2	QST 02	Motor Service Factor	75	P43	PFN 12	Controlled Fault Stop Enable	105
P3	QST 03 PFN 15	Motor Running Overload Class	76	P44	PFN 13	Independent Starting/Running Overload	106
P4	QST 04	Local Source	77	P45	PFN 14	Motor Starting Overload Class	107
P5	QST 05	Remote Source	78	P46	PFN 16	Motor Overload Hot/Cold Ratio	108
P6	QST 06 CFN 03	Initial Current 1	79	P47	PFN 17	Motor Overload Cooling Time	109
P7	QST 07 CFN 04	Maximum Current 1	80	P48	I/O 01	DI 1 Configuration	110
P8	QST 08 CFN 02	Ramp Time 1	81	P49	I/O 02	DI 2 Configuration	110
P9	QST 09	Up To Speed Time	82	P50	I/O 03	DI 3 Configuration	110
P10	CFN 01	Start Mode	83	P51	I/O 04	Digital Fault Input Trip Time	111
P11	CFN 08	Initial Voltage/Torque/Power	84	P52	I/O 05	R1 Configuration	112
P12	CFN 09	Maximum Torque/Power	85	P53	I/O 06	R2 Configuration	112
P13	CFN 10	Kick Level 1	86	P54	I/O 07	R3 Configuration	112
P14	CFN 11	Kick Time 1	86	P55	I/O 08	Analog Input Trip Type	113
P15	CFN 14	Stop Mode	87	P56	I/O 09	Analog Input Trip Level	114
P16	CFN 15	Decel Begin Level	88	P57	I/O 10	Analog Input Trip Time	114
P17	CFN 16	Decel End Level	89	P58	I/O 11	Analog Input Span	115
P18	CFN 17	Decel Time	90	P59	I/O 12	Analog Input Offset	116
P19	CFN 18	DC Brake Level	91	P60	I/O 13	Analog Output Function	116
P20	CFN 19	DC Brake Time	92	P61	I/O 14	Analog Output Span	117
P21	CFN20	DC Brake Delay	93	P62	I/O 15	Analog Output Offset	117
P22	CFN 06	Initial Current 2	93	P63	I/O 16	Inline Configuration	118
P23	CFN 07	Maximum Current 2	93	P64	I/O 17	Bypass Feedback Time	118
P24	CFN 05	Ramp Time 2	94	P65	I/O 18	Keypad Stop Disable	119
P25	CFN 12	Kick Level 2	94	P66	I/O 19	Power On Start Selection	119
P26	CFN 13	Kick Time 2	94	P67	FUN 15	Miscellaneous Commands	120
P27	CFN 21	Slow Speed	95	P68	FUN 12	Communication Timeout	121
P28	CFN 22	Slow Speed Current Level	95	P69	FUN 11	Communication Baud Rate	121
P29	CFN 23	Slow Speed Time Limit	96	P70	FUN 10	Communication Address	121
P30	CFN 24	Slow Speed Kick Level	96	P71	FUN 13	Communication Byte Framing	122
P31	CFN 25	Slow Speed Kick Time	97	P72	FUN 09	Energy Saver	122
P32	PFN 01	Over Current Level	98	P73	FUN 08	Heater Level	123
P33	PFN 02	Over Current Time	99	P74	FUN 07	Starter Type	124
P34	PFN 03	Under Current Level	100	P75	FUN 06	Rated Power Factor	125
P35	PFN 04	Under Current Time	100	P76	FUN 05	Rated Voltage	125
P36	PFN 05	Current Imbalance Level	101	P77	FUN 04	Phase Order	126
P37	PFN 06	Residual Ground Fault Level	102	P78	FUN 03	CT Ratio	126
P38	PFN 07	Over Voltage Level	103	P79	FUN 01	Meter 1	127
P39	PFN 08	Under Voltage Level	103	n/a	FUN 02	Meter 2	127
P40	PFN 09	Voltage Trip Time	104	P80	FUN 14	Software Version 1	128
P41	PFN 10	Auto Fault Reset Time	104	P81	FUN 16	Passcode	129
				P82	FL1	Fault Log	130

LED Display Parameters

5.3 LED Display Parameters

Number	Parameter	Setting Range	Units	Default	Page
P1	Motor FLA	1 – 6400	RMS Amps	10	75
P2	Motor Service Factor	1.00 – 1.99		1.15	75
P3	Motor Running Overload Class	Off, 1 – 40		10	76
P4	Local Source	PAd: Keypad tEr: Terminal SEr: Serial		tEr	77
P5	Remote Source				78
P6	Initial Motor Current 1	50 – 600	%FLA	100	79
P7	Maximum Motor Current 1	100 – 800	%FLA	600	80
P8	Ramp Time 1	0 – 300	Seconds	15	81
P9	Up To Speed Time	1 – 900	Seconds	20	82
P10	Start Mode	oLrP: Voltage Ramp curr: Current Ramp tt: TT Ramp Pr: Power Ramp		curr	83
P11	Initial Voltage/Torque/Power	1 – 100	%	25	84
P12	Maximum Torque/Power	10 – 325	%	105	85
P13	Kick Level 1	Off, 100 to 800	%FLA	Off	86
P14	Kick Time 1	0.1 – 10.0	Seconds	1.0	86
P15	Stop Mode	CoS: Coast SdcL: Volt Decel tdcL: TT Decel dcb: DC Braking		CoS	87
P16	Decel Begin Level	100 – 1	%	40	88
P17	Decel End Level	99 – 1	%	20	89
P18	Decel Time	1 – 180	Seconds	15	90
P19	DC Brake Level	10 – 100	%	25	91
P20	DC Brake Time	1 – 180	Seconds	5	92
P21	DC Brake Delay	0.1 – 3.0	Seconds	0.2	93
P22	Initial Motor Current 2	50 – 600	%FLA	100	93
P23	Maximum Motor Current 2	100 – 800	%FLA	600	93
P24	Ramp Time 2	0 – 300	Seconds	15	94
P25	Kick Level 2	Off, 100 – 800	%FLA	Off	94
P26	Kick Time 2	0.1 – 10.0	Seconds	1.0	94
P27	Slow Speed	Off, 7.1 14.3	%	Off	95
P28	Slow Speed Current Level	10 – 400	%FLA	100	95
P29	Slow Speed Time Limit	Off, 1 – 900	Seconds	10	96
P30	Slow Speed Kick Level	Off, 100 – 800	%FLA	Off	96
P31	Slow Speed Kick Time	0.1 – 10.0	Seconds	1.0	97
P32	Over Current Trip Level	Off, 50 – 800	%FLA	Off	98
P33	Over Current Trip Delay Time	Off, 0.1 – 90.0	Seconds	0.1	99
P34	Under Current Trip Level	Off, 5 – 100	%FLA	Off	100
P35	Under Current Trip Delay Time	Off, 0.1 – 90.0	Seconds	0.1	100
P36	Current Imbalance Trip Level	Off, 5 – 40	%	15	101
P37	Residual Ground Fault Trip Level	Off, 5 – 100	%FLA	Off	102
P38	Over Voltage Trip Level	Off, 1 – 40	%	Off	103
P39	Under Voltage Trip Level	Off, 1 – 40	%	Off	103
P40	Over/Under Voltage Trip Delay Time	0.1 – 90.0	Seconds	0.1	104

Number	Parameter	Setting Range	Units	Default	Page
P41	Auto Fault Reset Time	Off, 1 – 900	Seconds	Off	104
P42	Auto Reset Limit	Off, 1 – 10		Off	104
P43	Controlled Fault Stop Enable	Off, On		On	105
P44	Independent Starting/Running Overload	Off, On		Off	106
P45	Motor Starting Overload Class	Off, 1 – 40		10	107
P46	Motor Overload Hot/Cold Ratio	0 – 99	%	60	108
P47	Motor Overload Cooling Time	1.0 – 999.9	Minutes	30.0	109
P48	DI 1 Configuration	OFF: Off StOP: Stop FH: Fault High FL: Fault Low Fr: Fault Reset diSc: Disconnect InLn: Inline Cnfrm byP: Bypass Cnfrm EoLr: E OL Reset L-r: Local/Remote hdIS: Heat Disable hEn: Heat Enable rSEL: Ramp Select SS F: Slow Speed Forward SS R: Slow Speed Reverse bdIS: DC Brake Disable bEn: DC Brake Enable runE Run Enable rund Run Disable		Stop	110
P49	DI 2 Configuration			Off	
P50	DI 3 Configuration			Off	
P51	Digital Fault Input Trip Time	0.1 – 90.0	Seconds	0.1	111
P52	R1 Configuration	OFF: Off FLFS: Fault (fail safe) FLnF: Fault (non fail safe) run: Running utS: UTS AL: Alarm rdyr: Ready LOC: Locked Out OC: Over Current UC: Under Current OLA: OL Alarm ShFS: Shunt Trip (fail safe) ShnF: Shunt Trip (non fail safe) gfLt: Ground Fault ES: Energy Saver HEAt: Heating SSPd: Slow Speed SS F: Slow Speed Forward SS r: Slow Speed Reverse dcb: DC Braking FAn: Cooling Fan		FLFS	112
P53	R2 Configuration			Off	
P54	R3 Configuration			Off	
P55	Analog Input Trip Type	Off: Disabled Lo: Low Level Hi: High Level		Off	113
P56	Analog Input Trip Level	0 – 100	%	50	114
P57	Analog Input Trip Delay Time	0.1 – 90.0	Seconds	0.1	114
P58	Analog Input Span	1 – 100	%	100	115
P59	Analog Input Offset	0 – 99	%	0	116

Number	Parameter	Setting Range	Units	Default	Page
P60	Analog Output Function	0: Off (no output) 1: 0 – 100% Curr 2: 0 – 200% Curr 3: 0 – 800% Curr 4: 0 – 150% Volt 5: 0 – 150% OL 6: 0 – 10 kW 7: 0 – 100 kW 8: 0 – 1 MW 9: 0 – 10 MW 10: 0 – 100% Ain 11: 0 – 100% Firing 12: Calibration		0: Off (no output)	116
P61	Analog Output Span	1 – 125	%	100	117
P62	Analog Output Offset	0 – 99	%	0	117
P63	Inline Configuration	Off, 1.0– 10.0	Seconds	3.0	118
P64	Bypass Feedback Time	Off, 0.1 – 5.0	Seconds	2.0	118
P65	Keypad Stop Disable	On, OFF		On	119
P66	Power On Start Selection	0: Disabled 1: Start after power applied only 2: Start after fault reset only 3: Start after power applied and after fault reset		0	119
P67	Miscellaneous Commands	0: None 1: Std. BIST 2: Powered BIST 3: Reset Run Time 4: Reset KWh/MWh 5: Enter Reflash mode 6: Store Parameters 7: Load Parameters 8: Factory Reset		0	120
P68	Communication Timeout	Off, 1 – 120	Seconds	Off	121
P69	Communication Baud Rate	1200, 2400, 4800, 9600, 19200	bps	19.2	121
P70	Communication Address	1 – 247		1	121
P71	Communication Byte Framing	0: Even Parity, 1 Stop Bit 1: Odd Parity, 1 Stop Bit 2: No Parity, 1 Stop Bit 3: No Parity, 2 Stop Bits		0	122
P72	Energy Saver	Off, On		Off	122
P73	Heater Level	Off, 1 – 40	%FLA	Off	123
P74	Starter Type	nor: Normal Id: Inside Delta y-d: Wye-Delta / Other Electro mechanical PctL: Phase Control cFol: Current Follow AtL: Full Voltage ATL		nor	124
P75	Rated Power Factor	-0.01 (Lag) to 1.00 (Unity)		-0.92	125
P76	Rated Voltage	100, 110, 120, 200, 208, 220, 230, 240, 350, 380, 400, 415, 440, 460, 480, 500, 525, 575, 600, 660, 690, 800, 1000, 1140	RMS Voltage	480	125
P77	Phase Order	InS: Insensitive AbC: ABC CbA: CBA SPH: Single Phase		InS	126

Number	Parameter	Setting Range	Units	Default	Page
P78	CT Ratio	72:1, 96:1, 144:1, 288:1, 864:1, 2640:1, 3900:1, 5760:1, 8000:1, 14400:1, 28800:1		288	126
P79	Meter	0: Status 1: Ave Current 2: L1 Current 3: L2 Current 4: L3 Current 5: Curr Imbal 6: Ground Fault 7: Ave Volts 8: L1-L2 Volts 9: L2-L3 Volts 10: L3-L1 Volts 11: Overload 12: Power Factor 13: Watts 14: VA 15: VARS 16: kW hours 17: MW hours 18: Phase Order 19: Line Freq 20: Analog Input 21: Analog Output 22: Run Days 23: Run Hours 24: Starts 25: TruTorque % 26: Power % 27: Peak Starting Current 28: Last Starting Duration		0	127
P80	Software Version 1	Display Only		810023-01-08	128
P81	Passcode			Off	129
P82	Fault Log	1FXX - 9FXX		XFXX	130

LCD Display Parameters

5.4 LCD Display Parameters

The 2x16 display has the same parameters available as the LED display, with the exception of two meter parameters instead of one since two meters may be displayed on the main screen. The parameters are subdivided into five groups. The groups are **QST** (Quick Start), **CFN** (Control Functions), **I/O** (Input/Output Functions), **PFN** (Protection Functions) and **FUN** (Function).

The Quick Start Group provides a collection of the parameters that are most commonly changed when commissioning a starter. Many of the parameters in the Quick Start group are duplicates of the same parameters in other groups.

The MX^2 incorporates a number of parameters that allow you to configure the starter to meet the special requirements of your particular application.

The parameters are divided into groups of related functionality, and within the groups the parameters are identified by a short, descriptive name. They are numbered by the group name followed by an index within the group.

This chapter lists all of the parameters and their possible values.

The following shows the menu structure for the LCD display as well as the text that is displayed for the parameters on the display.

5.4.1 Quick Start Group

Number	Display	Parameter	Setting Range	Units	Default	Page
QST 00	Jump Code	Jump to Parameter	1 to 9		1	75
QST 01	Motor FLA	Motor FLA	1 to 6400	RMS Amps	10	75
QST 02	Motor SF	Motor Service Factor	1.00 to 1.99		1.15	75
QST 03	Running OL	Motor Overload Class Running	Off, 1 to 40		10	76
QST 04	Local Src	Local Source	Keypad Terminal Serial		Terminal	77
QST 05	Remote Src	Remote Source				78
QST 06	Init Cur 1	Initial Motor Current 1	50 to 600	%FLA	100	79
QST 07	Max Cur 1	Maximum Motor Current 1	100 to 800	%FLA	600	80
QST 08	Ramp Time 1	Ramp Time 1	0 to 300	Seconds	15	81
QST 09	UTS Time	Up To Speed Time	1 to 900	Seconds	20	82

5.4.2 Control Function Group

Number	Display	Parameter	Setting Range	Units	Default	Page
CFN 00	Jump Code	Jump to Parameter	1 to 25		1	83
CFN 01	Start Mode	Start Mode	Voltage Ramp Current Ramp TT Ramp Power Ramp		Current Ramp	83
CFN 02	Ramp Time 1	Ramp Time 1	0 to 300	Seconds	15	81
CFN 03	Init Cur 1	Initial Motor Current 1	50 to 600	%FLA	100	79
CFN 04	Max Cur 1	Maximum Motor Current 1	100 to 800	%FLA	600	80
CFN 05	Ramp Time 2	Ramp Time 2	0 to 300	Seconds	15	94
CFN 06	Init Cur 2	Initial Motor Current 2	50 to 600	%FLA	100	93
CFN 07	Max Cur 2	Maximum Motor Current 2	100 to 800	%FLA	600	93
CFN 08	Init V/T/P	Initial Voltage/Torque/Power	1 to 100	%	25	84
CFN 09	Max T/P	Maximum Torque/Power	10 to 325	%	105	85
CFN 10	Kick Lvl 1	Kick Level 1	Off, 100 to 800	%FLA	Off	86
CFN 11	Kick Time 1	Kick Time 1	0.1 to 10.0	Seconds	1.0	86
CFN 12	Kick Lvl 2	Kick Level 2	Off, 100 to 800	%FLA	Off	94
CFN 13	Kick Time 2	Kick Time 2	0.1 to 10.0	Seconds	1.0	94
CFN 14	Stop Mode	Stop Mode	Coast Volt Decel TT Decel DC Brake		Coast	87
CFN 15	Decel Begin	Decel Begin Level	100 to 1	%	40	88
CFN 16	Decel End	Decel End Level	99 to 1	%	20	89
CFN 17	Decel Time	Decel Time	1 to 180	Seconds	15	90
CFN 18	Brake Level	DC Brake Level	10 to 100	%	25	91
CFN 19	Brake Time	DC Brake Time	1 to 180	Seconds	5	92
CFN 20	Brake Delay	DC Brake Delay	0.1 to 3.0	Seconds	0.2	93
CFN 21	SSpd Speed	Slow Speed	Off, 7.1, 14.3	%	Off	95
CFN 22	SSpd Curr	Slow Speed Current Level	10 to 400	% FLA	100	95
CFN 23	SSpd Timer	Slow Speed Time Limit	Off, 1 to 900	Seconds	10	96
CFN 24	SSpd Kick Curr	Slow Speed Kick Level	Off, 100 to 800	% FLA	Off	96
CFN 25	SSpd Kick T	Slow Speed Kick Time	0.1 to 10.0	Seconds	1.0	97

5.4.3 Protection Group

Number	Display	Parameter	Setting Range	Units	Default	Page
PFN 00	Jump Code	Jump to Parameter	1 to 17		1	98
PFN 01	Over Cur Lvl	Over Current Trip Level	Off, 50 to 800	%FLA	Off	98
PFN 02	Over Cur Tim	Over Current Trip Delay Time	Off, 0.1 to 90.0	Seconds	0.1	99
PFN 03	Undr Cur Lvl	Under Current Trip Level	Off, 5 to 100	%FLA	Off	100
PFN 04	Undr Cur Tim	Under Current Trip Delay Time	Off, 0.1 to 90.0	Seconds	0.1	100
PFN 05	Cur Imbl Lvl	Current Imbalance Trip Level	Off, 5 to 40	%	15	101
PFN 06	Gnd Flt Lvl	Residual Ground Fault Trip Level	Off, 5 to 100	%FLA	Off	102
PFN 07	Over Vlt Lvl	Over Voltage Trip Level	Off, 1 to 40	%	Off	103
PFN 08	Undr Vlt Lvl	Under Voltage Trip Level	Off, 1 to 40	%	Off	103
PFN 09	Vlt Trip Tim	Over/Under Voltage Trip Delay Time	0.1 to 90.0	Seconds	0.1	104
PFN 10	Auto Reset	Auto Fault Reset Time	Off, 1 to 900	Seconds	Off	104
PFN 11	Auto Rst Lim	Auto Reset Limit	Off, 1 to 10		Off	104
PFN 12	Ctrl Flt En	Controlled Fault Stop Enable	Off, On		On	105
PFN 13	Indep S® OL	Independent Starting/Running Overload	Off, On		Off	106
PFN 14	Starting OL	Motor Overload Class Starting	Off, 1 to 40		10	107
PFN 15	Running OL	Motor Overload Class Running	Off, 1 to 40		10	76
PFN 16	OL H© Ratio	Motor Overload Hot/Cold Ratio	0 to 99	%	60	108
PFN 17	OL Cool Tim	Motor Overload Cooling Time	1.0 to 999.9	Minutes	30.0	109

5.4.4 I/O Group

Number	Display	Parameter	Setting Range	Units	Default	Page
I/O 00	Jump Code	Jump to parameter	1 to 19		1	110
I/O 01	DI 1 Config	DI 1 Configuration	Off Stop Fault High Fault Low Fault Reset Disconnect Inline Cnfrm Bypass Cnfrm E OL Reset Local/Remote Heat Disable Heat Enable Ramp Select Slow Spd Fwd Slow Spd Rev Brake Disabl Brake Enable Run Enable Run Disable		Stop	110
I/O 02	DI 2 Config	DI 2 Configuration			Off	
I/O 03	DI 3 Config	DI 3 Configuration			Off	
I/O 04	Din Trp Time	Digital Fault Input Trip Time	0.1 to 90.0	Seconds	0.1	111

Number	Display	Parameter	Setting Range	Units	Default	Page
I/O 05	R1 Config	R1 Configuration (Relay #1)	Off Fault FS (Fail Safe) Fault NFS (Non Fail Safe) Running UTS Alarm Ready Locked Out Overcurrent Undercurrent OL Alarm Shunt Trip FS Shunt Trip NFS Ground Fault Energy Saver Heating Slow Spd Slow Spd Fwd Slow SPd Rev Braking Cool Fan Ctl		Fault FS	112
I/O 06	R2 Config	R2 Configuration (Relay #2)			Off	
I/O 07	R3 Config	R3 Configuration (Relay #3)			Off	
I/O 08	Ain Trp Type	Analog Input Trip Type	Off Low Level High Level		Off	113
I/O 09	Ain Trp Lvl	Analog Input Trip Level	0 to 100	%	50	114
I/O 10	Ain Trp Tim	Analog Input Trip Delay Time	0.1 to 90.0	Seconds	0.1	114
I/O 11	Ain Span	Analog Input Span	1 to 100	%	100	115
I/O 12	Ain Offset	Analog Input Offset	0 to 99	%	0	116
I/O 13	Aout Fctn	Analog Output Function	Off 0 – 100% Curr 0 – 200% Curr 0 – 800% Curr 0 – 150% Volt 0 – 150% OL 0 – 10 kW 0 – 100 kW 0 – 1 MW 0 – 10 MW 0 – 100% Ain 0 – 100% Firing Calibration		Off	116
I/O 14	Aout Span	Analog Output Span	1 to 125	%	100	117
I/O 15	Aout Offset	Analog Output Offset	1 to 99	%	0	117
I/O 16	Inline Confg	In Line Configuration	Off, 1.0 to 10.0	Seconds	3.0	118
I/O 17	Bypas Fbk Tim	Bypass / 2M Confirm	Off, 0.1 to 5.0	Seconds	2.0	118
I/O 18	Kpd Stop Dis	Keypad Stop Disable	Enabled, Disabled		Enabled	119
I/O 19	Auto Start	Power On Start Selection	Disabled Power Fault Power and Fault		Disabled	119

5.4.5 Function Group

Number	Display	Parameter	Setting Range	Units	Default	Page
FUN 00	Jump Code	Jump to parameter	1 to 16		1	120
FUN 01	Meter 1	Meter 1	Ave Current L1 Current L2 Current L3 Current Curr Imbal Ground Fault Ave Volts L1-L2 Volts L2-L3 Volts L3-L1 Volts Overload Power Factor Watts VA vars kW hours MW hours Phase Order Line Freq Analog Input Analog Output Run Days Run Hours Starts TruTorque % Power % Pk Accel Cur Last Start T		Ave Current	127
FUN 02	Meter 2	Meter 2			Ave Volts	
FUN 03	CT Ratio	CT Ratio	72:1, 96:1, 144:1, 288:1, 864:1, 2640:1, 3900:1, 5760:1, 8000:1, 14400:1, 28800:1		288:1	126
FUN 04	Phase Order	Input Phase Sensitivity	Insensitive ABC CBA Single Phase		Insensitive	126
FUN 05	Rated Volts	Rated RMS Voltage	100, 110, 120, 200, 208, 220, 230, 240, 350, 380, 400, 415, 440, 460, 480, 500, 525, 575, 600, 660, 690, 800, 1000, 1140	RMS Voltage	480	125
FUN 06	Motor PF	Motor Rated Power Factor	-0.01 (Lag) to 1.00 (Unity)		-0.92	125
FUN 07	Starter Type	Starter Type	Normal Inside Delta Wye-Delta Phase Ctl Curr Follow ATL	%	Normal	124
FUN 08	Heater Level	Heater Level	Off, 1 to 40	%FLA	Off	123
FUN 09	Energy Saver	Energy Saver	Off, On	Seconds	Off	122
FUN 10	Com Drop #	Communication Address	1 to 247		1	121
FUN 11	Com Baud rate	Communication Baud Rate	1200 2400 4800 9600 19200	bps	19200	121
FUN 12	Com Timeout	Communication Timeout	Off, 1 to 120	Seconds	Off	121

Number	Display	Parameter	Setting Range	Units	Default	Page
FUN 13	Com Parity	Communications Byte Framing	Even, 1 Stop Bit Odd, 1 Stop Bit None, 1 Stop Bit None, 2 Stop Bit		Even, 1 Stop	122
FUN 14	Software 1	Software 1 Part Number	Display Only		810023-01-08	128
FUN 15	Misc Command	Miscellaneous Commands	None Std BIST Powered BIST Reset RT Reset kWh Reflash Mode Store Params Load Params Factory Rst		None	120
FUN 16	Passcode	Passcode			Off	129

5.4.6 LCD Fault Group

Group	Fault Number	Fault Description	Starter State	I1	I2	I3	V1	V2	V3	kW	Hz	Run Time
FL1												
FL2												
FL3												
FL4												
FL5												
FL6												
FL7												
FL8												
FL9												

5.4.7 LED Fault Group

Group	Fault Number	Fault Description	Fault Number	Fault Description
F1			F6	
F2			F7	
F3			F8	
F4			F9	
F5				

NOTES:

6 Parameter Description

Parameter Descriptions

6.1 Parameter Descriptions

The detailed parameter descriptions in this chapter are organized in the same order as they appear on the LED display. If the remote LCD display is being used, the table in chapter 5 beginning on page 62 can be used to find the page number of the parameter in this chapter.

Each parameter has a detailed description that is displayed with the following format.

P__	Parameter Name	MMM__

LED Display

LCD Display

```
MMM:Parameter
MI    Value
```

Range Parameter Value (Default: Constant)

OR

LED	LCD
EEE	Keypad

Description The description of the function.

See Also Cross references to related parameters or other chapters.

In the above format, the header box for the parameter contains the P number (as it appears in the menu on the LED display), the parameter name and the parameter group number (as it appears in the menu on the LCD display).

The **LCD Display** section shows an example of what actually appears on the remote mounted keypad. The LED display shows an example of what actually appears on the built in display. The parameter group (represented above by “MMM”) and the (possibly abbreviated) parameter name are shown on the first line. The parameter group number (represented above by “MI” for “menu index”) and the parameter’s value and units are shown on the second line.

Some parameters appear in two different menus of the LCD display. This is the case for those parameters that are in the Quick Start Group. In this case, both LCD menu groups are listed in the header box and two example LCD displays are shown.

For some parameters, the **Range** section is enough to describe the parameter. For others, there may be an additional **Options** section to describe each of the options that a parameter may be set to. The form that the options take may be different for the LED and LCD displays, so this section shows how the options appear on both displays.

The **See Also** section lists cross-references to other parameters that may be related as well as references to further detail in other chapters.

Jump to Parameter — QST 00

By changing the value of this parameter and pressing [ENTER], you can jump directly to any parameter within that group.

P1 — Motor FLA — QST 01

LED Display

10

LCD Display:

```
QST: Motor FLA
01       10Amp
```

Range

Model Dependent, 1 – 6400 Amps RMS **(Default 10A)**

Description

The Motor FLA parameter configures the motor full load amps and is obtained from the nameplate on the attached motor.

If multiple motors are connected, the FLA of each motor must be added together for this value.

⌘ **NOTE:** Incorrectly setting this parameter prevents proper operation of the motor overload protection, motor over current protection, motor undercurrent protection, ground fault protection and acceleration control.

P2 — Motor Service Factor — QST 02

LED Display

1.15

LCD Display

```
QST:  Motor SF
02     1.15
```

Range

1.00 – 1.99 **(Default 1.15)**

Description

The Motor Service Factor parameter should be set to the service factor of the motor. The service factor is used for the overload calculations. If the service factor of the motor is not known, then the service factor should be set to 1.00.

⌘ **NOTE:** The NEC (National Electrical Code) does not allow the service factor to be set above 1.40. Check with other local electrical codes for their requirements.

The National Electrical Code, article 430 Part C, allows for different overload multiplier factors depending on the motor and operating conditions. NEC section 430-32 outlines the allowable service factor for different motors.

See Also

Theory of Operation section 7.2, Motor Service Factor on page 139.

P3	Motor Overload Class Running	QST 03, PFN 15

LED Display

10

LCD Display

```
QST: Running OL
03        10
```

```
PFN: Running OL
15        10
```

Range

Off, 1– 40 **(Default 10)**

Description

The Motor Running Overload Class parameter sets the class of the electronic overload for starting and running. If separate starting versus running overload classes are desired, set the independent S\R O/L (P44 / PFN13) parameter to "On".

The starter stores the thermal overload value as a percentage value between 0 and 100%, with 0% representing a “cold” overload and 100% representing a tripped overload. See section 7.1, for the overload trip time versus current curves.

When the parameter is set to "Off", the electronic overload is disabled when up to speed and a separate motor overload protection device must be supplied.

⌘ **NOTE:** Care must be taken not to damage the motor when turning the running overload class off or setting to a high value.

⌘ **NOTE:** Consult motor manufacturer data to determine the correct motor overload settings.

See Also

Independent Starting/Running Overload (P44 / PFN 13) on page 106.
Motor Starting Overload Class (P45 / PFN 14) on page 107.
Motor Overload Hot/Cold Ratio (P46 / PFN 16) on page 108.
Motor Overload Cooling Time (P47 / PFN 17) on page 109.
Relay Output Configuration (P52-54 / I/O 05 - 07) on page 112.
Theory of Operation section 7.1, Solid State Motor Overload Protection on page 132.

P4	Local Source	QST 04

LED Display

tEr

LCD Display

```
QST: Local Src
04  Terminal
```

Range

LED	LCD	Description
PAd	Keypad	The start/stop control is from the keypad.
tEr	Terminal	The start/stop control is from the terminal strip inputs. **(Default)**
SEr	Serial	The start/stop control is from the network.

Description

The MX^2 can have three sources of start and stop control; Terminal, Keypad and Serial. Two parameters, (P4 / QST 04) - Local Source and (P5 / QST 05) - Remote Source, allows the user to change the control source.

If a digital input is programmed as “L-r” (Local / Remote), then that input selects the control source. When the input is low, the local source is used. When the input is high, the remote source is used. If no digital input is programmed as “L-r”, then the local/remote bit in the starter control Modbus register selects the control source. The default value of the bit is Local (0).

See Also

Remote Source (P5 / QST 05) parameter on page 78.
Digital Input Configuration (P45-P50 / I/O 01- I/O 03) parameters on page 110.
Keypad Stop Disable (P65 / I/O 18) parameter on page 119.
Communication Timeout (P68 / FUN 12) parameter on page 121.
Communication Baud Rate (P69 / FUN 11) parameter on page 121.
Communication Address (P70 / FUN 10) parameter on page 121.

⌘ **NOTE:** By default, the Stop key is always enabled, regardless of selected control source. It may be disabled though using the P65 / I/O18 - Keypad Stop Disable parameter on page 119.

P5	Remote Source	QST 05

LED Display

tEr

LCD Display

QST: Remote SRC
05 Terminal

Range

LED	LCD	Description
PAd	Keypad	The start/stop control is from the keypad.
tEr	Terminal	The start/stop control is from the terminal strip inputs. **(Default)**
SEr	Serial	The start/stop control is from the network.

Description

The MX^2 can have three sources of start and stop control; Terminal, Keypad and Serial. Two parameters, (P4 / QST 04) - Local Source and (P5 / QST 05) - Remote Source, select the sources of the start and stop control.

If a digital input is programmed as "L-r" (Local / Remote), then that input selects the control source. When the input is low, the local source is used. When the input is high, the remote source is used. If no digital input is programmed as "L-r", then the local/remote bit in the Modbus starter control register selects the control source. The default value of the bit is Local (0).

See Also

Local Source (P4 / QST 04) parameter on page 77.
Digital Input Configuration (P45-P50 / I/O 01- I/O 03) parameters on page 110.
Keypad Stop Disable (P65 / I/O 18) parameter on page 119.
Communication Timeout (P68 / FUN 12) parameter on page 121.
Communication Baud Rate (P69 / FUN 11) parameter on page 121.
Communication Address (P70 / FUN 10) parameter on page 121.
Modbus Register Map, refer to www.benshaw.com.

Figure 24: Local Remote Source

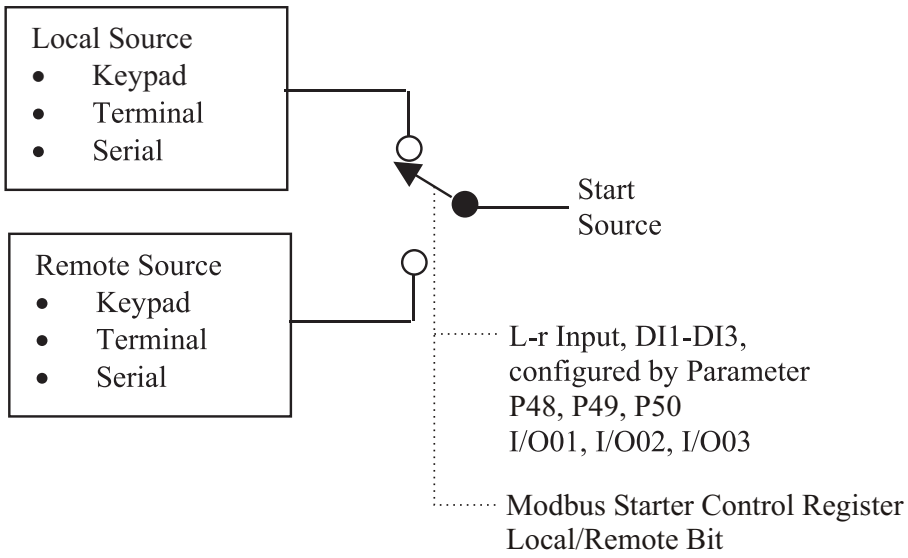

P6	Initial Motor Current 1	QST 06, CFN 03

LED Display

100

LCD Display

```
QST: Init Cur 1
06      100 %
```

```
CFN: Init Cur 1
03      100 %
```

Range

50 – 600 % of FLA **(Default 100%)**

Description

The Initial Motor Current 1 parameter is set as a percentage of the Motor FLA (P1 / QST 01) parameter setting. The Initial Current 1 parameter sets the current that is initially supplied to the motor when a start is commanded. The initial current should be set to the level that allows the motor to begin rotating within a couple of seconds of receiving a start command.

To adjust the initial current setting, give the starter a run command. Observe the motor to see how long it takes before it begins rotating and then stop the unit. For every second that the motor doesn't rotate, increase the initial current by 20%. Typical loads require an initial current in the range of 50% to 175%.

If the motor does not rotate within a few seconds after a start command, the initial current should be increased. If the motor accelerates too quickly after a start command, the initial current should be decreased.

The Initial Current 1 parameter must be set to a value that is lower than the Maximum Current 1 (P7 / QST 07) parameter setting.

See Also

Maximum Current 1 (P7 / QST 07) parameter on page 80.
Ramp Time 1 (P8 / QST 08) parameter on page 81.
Start Mode (P10 / CFN 01) parameter on page 83.
Kick Level 1 (P13 / CFN 10) parameter on page 86.
Kick Time 1 (P14 / CFN 11) parameter on page 86.
Theory of Operation section 7.3.1, Current Ramp Settings, Ramps and Times, on page 140.

P7	Maximum Motor Current 1	QST 07, CFN 04

LED Display

600

LCD Display

```
QST: Max Cur 1
07      600 %
```

```
CFN: Max Cur 1
04      600 %
```

Range

100 – 800 % of FLA **(Default 600%)**

Description

The Maximum Motor Current 1 parameter is set as a percentage of the Motor FLA (P1 / QST 01) parameter setting. This parameter performs two functions. It sets the current level for the end of the ramp profile. It also sets the maximum current that is allowed to reach the motor after the ramp is completed.

If the ramp time expires before the motor has reached full speed, the starter holds the current at the maximum current level until either the UTS timer expires; the motor reaches full speed, or the overload trips.

Typically, the maximum current is set to 600% unless the power system or load dictates the setting of a lower or higher maximum current.

See Also

Initial Current 1 (P6 / QST 06) parameter on page 79.
Ramp Time 1 (P8 / QST 08) parameter on page 81.
Up To Speed Time (P9 / QST 09) parameter on page 82.
Start Mode (P10 / CFN 01) parameter on page 83.
Kick Level 1 (P13 / CFN 10) parameter on page 86.
Kick Time 1 (P14 / CFN 11) parameter on page 86.
Theory of Operation section 7.3.1, Current Ramp Settings, Ramps and Times on page 140.

P8	Ramp Time 1	QST 08, CFN 02

LED Display

15

LCD Display

```
QST: Ramp Time 1
08        15 sec
```

```
CFN: Ramp Time 1
02        15 sec
```

Range

0 – 300 seconds **(Default 15)**

Description

The Ramp Time 1 parameter is the time it takes for the starter to allow the current, voltage, torque or power (depending on the start mode) to go from its initial to the maximum value. To make the motor accelerate faster, decrease the ramp time. To make the motor accelerate slower, increase the ramp time.

A typical ramp time setting is from 15 to 30 seconds.

If the ramp time expires before the motor reaches full speed, the starter maintains the maximum current level until either the motor reaches full speed, the UTS timer expires, or the motor thermal overload trips.

⌘ **NOTE**: Setting the ramp time to a specific value does not necessarily mean that the motor will take this time to accelerate to full speed. The motor and load may achieve full speed before the ramp time expires if the application does not require the set ramp time and maximum current to reach full speed. Alternatively, the motor and load may take longer than the set ramp time to achieve full speed.

See Also

Initial Current 1 (P6 / QST 06) parameter on page 79.
Maximum Current 1 (P7 / QST 07) parameter on page 80.
Up To Speed Time (P9 / QST 09) parameter on page 82.
Start Mode (P10 / CFN 01) parameter on page 83.
Kick Level 1 (P13 / CFN 10) parameter on page 86.
Kick Time 1 (P14 / CFN 11) parameter on page 86.
Theory of Operation section 7.3.1, Current Ramp Settings, Ramps and Times on page 140.

P9	Up To Speed Time	QST 09

LED Display

20

LCD Display

```
QST:  UTS Time
09        20 sec
```

Range

1– 900 Seconds **(Default 20)**

Description

The Up To Speed Time parameter sets the maximum time the motor can take to accelerate to full speed. A stalled motor condition is detected if the motor does not get up-to-speed before the up-to-speed timer expires. The motor is considered up-to-speed once the current stabilizes below 175 percent of the FLA value and the ramp time expires.

⌘ **NOTE:** During normal acceleration ramps, the up-to-speed timer has to be greater than the sum of the highest ramp time in use and the kick time. The up-to-speed timer does not automatically change to be greater than the ramp time. If a ramp time greater than the up-to-speed timer is set, the starter will declare an up-to-speed fault every time a start is attempted.

⌘ **NOTE:** When the Start Mode (P10 / CFN 01) parameter is set to "Voltage Ramp", the UTS timer acts as an acceleration kick. When the UTS timer expires, full voltage is applied to the motor. This feature can be used to reduce motor oscillations if they occur near the end of an open loop voltage ramp start.

⌘ **NOTE:** When the Starter Type (P74 / FUN 07) parameter is set to "Wye-Delta", the UTS timer is used as the transition timer. When the UTS timer expires, the transition from Wye starting mode to Delta running mode takes place if it has not already occurred.

Fault Code 01 - Up to Speed Fault is declared when a stalled motor condition is detected.

See Also

Ramp Time 1 (P8 / QST 08) parameter on page 81.
Start Mode (P10 / CFN 01) parameter on page 83.
Kick Time 1 (P14 / CFN 11) parameter on page 86.
Ramp Time 2 (P24 / CFN 05) parameter on page 94.
Kick Time 2 (P26 / CFN 13) parameter on page 94.
Starter Type (P74 / FUN 07) parameter on page 124.
Theory of Operation section 7.3, Acceleration Control on page 140.
Theory of Operation section 7.8, Wye-Delta on page 160.

Jump to Parameter — CFN 00

By changing the value of this parameter and pressing [ENTER], you can jump directly to any parameter within that group.

P10 — Start Mode — CFN 01

LED Display

curr

LCD Display

```
CFN: Start Mode
01 Current Ramp
```

Range

LED	LCD	Description
oLrP	Voltage Ramp	Open Loop Voltage acceleration ramp.
curr	Current Ramp	Current control acceleration ramp. **(Default)**
tt	TT Ramp	TruTorque control acceleration ramp.
Pr	Power Ramp	Power (kW) control acceleration ramp.

Description

The Start Mode parameter allows the selection of the optimal starting ramp profile based on the application.

The closed loop current control acceleration ramp is ideal for starting most general-purpose motor applications. Ex: crushers, ball mills, reciprocating compressors, saws, centrifuges, and most other applications.

The closed loop TruTorque control acceleration ramp is suitable for applications that require a smooth torque output from the motor during starting. Ex: centrifugal pumps, fans. The Tru Torque is also suitable for belt driven applications to eliminate belt sequel that commonly occurs near full speed.

The closed loop power control acceleration ramp is ideal for starting applications using a generator or other limited capacity source.

See Also

Initial Current 1 (P6 / QST 06) parameter on page 79.
Maximum Current 1 (P7 / QST 07) parameter on page 80.
Ramp Time 1 (P8 / QST 08) parameter on page 81.
Initial Voltage/Torque/Power (P11 / CFN 08) parameter on page 84.
Kick Level 1 (P13 / CFN 10) parameter on page 86.
Kick Time 1 (P14 / CFN 11) parameter on page 86.
Theory of Operation section 7.3, Acceleration Control on page 140.

P11	Initial Voltage/Torque/Power	CFN08

LED Display

25

LCD Display

```
CFN: Init V/T/P
08       25%
```

Range

1 – 100 % of Voltage/Torque/Power **(Default 25%)**

Description

Start Mode (P10/CFN01) set to Open Loop Voltage Acceleration:
This parameter sets the starting point for the voltage acceleration ramp profile. A typical value is 25%. If the motor starts too quickly or the initial current is too high, reduce this parameter. If the motor does not start rotating within a few seconds after a start is commanded, increase this parameter.

Start Mode (P10/CFN01) set to Current Control Acceleration:
Not used when the Start Mode parameter is set to Current control acceleration. Refer to the P6 - Initial Current 1 (CFN03) parameter to set the initial current level.

Start Mode (P10/CFN01) set to TruTorque Control Acceleration:
This parameter sets the initial torque level that the motor produces at the beginning of the starting ramp profile. A typical value is 10% to 20%. If the motor starts too quickly or the initial torque level is too high, reduce this parameter. If the motor does not start rotating within a few seconds after a start is commanded, increase this parameter. If the value is set too low a "No Current at Run" fault may occur during acceleration.

⌘ **NOTE**: It is important that the (P75 / FUN06) - Rated Power Factor parameter is set properly so that the actual initial torque level is the value desired.

Start Mode (P10/CFN01) set to (kW) Power Control Acceleration:
This parameter sets the initial motor power (KW) level that will be achieved at the beginning of the starting ramp profile. A typical value is 10% to 30%. If the motor starts too quickly or the initial power level is too high, reduce this parameter. If the motor does not start rotating within a few seconds after a start is commanded, increase this parameter. If the value is set too low a "No Current at Run" fault may occur during acceleration.

⌘ **NOTE:** It is important that the (P75 / FUN06) - Rated Power Factor parameter is set properly so that the actual initial power level is the value desired.

See Also

Initial Current 1 (P6 / QST 06) parameter on page 79.
Ramp Time 1 (P8 / QST 08) parameter on page 81.
Start Mode (P10 / CFN 01) parameter on page 83.
Maximum Torque/Power (P12 / CFN 09) parameter on page 85.
Rated Power Factor (P75 / FUN 06) parameter on page 125.
Theory of Operation section 7.3, Acceleration Control on page 140.

P12	Maximum Torque/Power	CFN 09

LED Display

105

LCD Display

```
CFN: Max T/P
09      105%
```

Range

10 – 325 % of Torque/Power **(Default 105%)**

Description

Start Mode (P10/CFN01) set to Open Loop Voltage Acceleration:
Not used when the Start Mode parameter is set to open-loop voltage acceleration. When in open loop voltage acceleration mode, the final voltage ramp value is always 100% or full voltage.

Start Mode (P10/CFN01) set to Current Control Acceleration:
Not used when the Start Mode parameter is set to Current control acceleration mode. Refer to the Maximum Current 1 (P7 / CFN04) parameter to set the maximum current level.

Start Mode (P10/CFN01) set to TruTorque Control Acceleration:
This parameter sets the final or maximum torque level that the motor produces at the end of the acceleration ramp time. For a loaded motor, the maximum torque value initially should be set to 100% or greater. If the maximum torque value is set too low, the motor may not produce enough torque to reach full speed and may stall. On lightly loaded motors, this parameter may be reduced below 100% to produce smoother starts.

⌘ **NOTE:** It is important that the (P75 / FUN06) - Rated Power Factor parameter is set properly so that the desired maximum torque level is achieved.

Start Mode (P10/CFN01) set to Power Control Acceleration:
This parameter sets the final or maximum power (KW) consumption level that will be achieved at the end of the ramp time. For a loaded motor, the maximum power value initially should be set to 100% or greater. If the maximum power level is set too low, the motor may not produce enough torque to reach full speed and may stall. On lightly loaded motors, this parameter may be reduced below 100% to provide for smoother starts.

⌘ **NOTE**: It is important that the (P75 / FUN06) - Rated Power Factor parameter is set properly so that the actual maximum power level is achieved.

See Also

Initial Current 1 (P6 / CFN03) on page 79.
Maximum Current 1 (P7 / QST 07) parameter on page 80.
Ramp Time 1 (P8 / QST 08) parameter on page 81.
Start Mode (P10 / CFN 01) parameter on page 83.
Initial Voltage/Torque/Power (P11 / CFN 08) parameter on page 84.
Rated Power Factor (P75 / FUN 06) parameter on page 125.
Theory of Operation section 7.3, Acceleration Control, on page 140.

P13 Kick Level 1 CFN 10

LED Display

OFF

LCD Display

```
CFN: Kick Lvl 1
10   Off
```

Range Off, 100 – 800% of FLA **(Default Off)**

Description The Kick Level 1 parameter sets the current level that precedes any ramp when a start is first commanded. The kick current is only useful on motor loads that are hard to get rotating but then are much easier to move once they are rotating. An example of a load that is hard to get rotating is a ball mill. The ball mill requires a high torque to get it to rotate the first quarter turn (90°). Once the ball mill is past 90° of rotation, the material inside begins tumbling and it is easier to turn.

The kick level is usually set to a low value and then the kick time is adjusted to get the motor rotating. If the kick time is set to more than 2.0 seconds without the motor rotating, increase the kick current by 100% and re-adjust the kick time.

See Also Start Mode (P10 / CFN 01) parameter on page 83.
Kick Time 1 (P14 / CFN 11) parameter on page 86.
Theory of Operation section 7.3.2, Programming A Kick Current on page 141.

P14 Kick Time 1 CFN 11

LED Display

1.0

LCD Display

```
CFN:Kick Time 1
11       1.0 sec
```

Range 0.1 – 10.0 seconds **(Default 1.0)**

Description The Kick Time 1 parameter sets the length of time that the kick current level (P13 / CFN 10) is applied to the motor.

The kick time adjustment should begin at 0.5 seconds and be adjusted by 0.1 or 0.2 second intervals until the motor begins rotating. If the kick time is adjusted above 2.0 seconds without the motor rotating, start over with a higher kick current setting.

⌘ **NOTE:** The kick time adds to the total start time and must be accounted for when setting the UTS time.

See Also Start Mode (P10 / CFN 01) parameter on page 83.
Up To Speed (P9 / QST 09) parameter on page 82.
Kick Level 1 (P13 / CFN 10) parameter on page 86.
Theory of Operation section 7.3.2, Programming a Kick Current on page 141.

P15	Stop Mode	CFN 14

LED Display

CoS.

LCD Display

```
CFN: Stop Mode
14  Coast
```

Range

LED	LCD	Description
CoS	Coast	Coast to stop. **(Default)**
SdcL	Volt Decel	Open loop voltage deceleration.
tdcL	TT Decel	TruTorque deceleration.
dcb	DC Brake	DC Braking.

Description

Coast:
A coast to stop should be used when no special stopping requirements are necessary; Example: crushers, balls mills, centrifuges, belts, conveyor. The bypass contactor is opened before the SCRs stop gating to reduce wear on the contactor contacts.

Voltage Decel:
In this mode, the starter linearly phases-back the SCRs based on the parameters Decel Begin Level, Decel End Level, and Decel Time.

TruTorque Decel:
In this mode, the starter linearly reduces the motor torque based on the Decel End Level and Decel Time.

DC Brake:
In this mode the starter provides D.C. injection for frictionless braking of a three phase motor.

⌘ **NOTE:** The MX^2 stops the motor when any fault occurs. Depending on the application, it may be desirable for the motor to be stopped in a controlled manner (Voltage Decel, TT Decel or D.C. Braking) instead of being allowed to coast to a stop when this occurs. This may be achieved by setting the Controlled Fault Stop Enable (P43 / PFN12) parameter to "On". Be aware, however, that not all fault conditions allow for a controlled fault stop.

See Also

Decel Begin Level (P16 / CFN 15) parameter on page 88.
Decel End Level (P17 / CFN 16) parameter on page 89.
Decel Time (P18 / CFN 17) parameter on page 90.
DC Brake Level (P19 / CFN 18) parameter on page 91.
DC Brake Time (P20 / CFN 19) parameter on page 92.
DC Brake Delay (P21 / CFN 20) parameter on page 93.
Controlled Fault Stop Enable (P43 / PFN 12) parameter on page 105.
Digital Input Configuration (P48-P50 / I/O 01-03) parameters on page 110.
Relay Output Configuration (P52-P54 / I/O 05-07) parameters on page 112.
Theory of Operation section 7.4, Deceleration Control on page 149.
Theory of Operation section 7.5, Braking Controls on page 151.

P16	Decel Begin Level	CFN 15

LED Display

40

LCD Display

```
CFN:Decel Begin
15        40 %
```

Range

1 % – 100% of phase angle firing **(Default 40%)**

Description

Stop Mode (P15/CFN14) set to Voltage Deceleration:
The voltage deceleration profile utilizes an open loop S-curve voltage ramp profile. The Decel Begin Level parameter sets the initial or starting voltage level when transferring from running to deceleration. The deceleration beginning level is not a precise percentage of actual line voltage, but defines a point on the S-curve deceleration profile.

A typical voltage decel begin level setting is between 30% and 40%. If the motor initially surges (oscillates) when a stop is commanded, decrease this parameter value. If there is a sudden drop in motor speed when a stop is commanded, increase this parameter value.

Stop Mode (P15/CFN14) set to TruTorque Deceleration:
Not used when the Stop Mode parameter is set to TruTorque Decel. The TruTorque beginning deceleration level is automatically calculated based on the motor load at the time the stop command is given.

⌘ **NOTE:** It is important that the (P75 / FUN06) - Rated Power Factor parameter is set properly so that the actual deceleration torque levels are the levels desired.

See Also

Stop Mode (P10 / CFN 14) parameter on page 87.
Decel End Level (P17 / CFN 16) parameter on page 89.
Decel Time (P18 / CFN 17) parameter on page 90.
Controlled Fault Stop Enable (P43 / PFN 12) parameter on page 105.
Rated Power Factor (P75 / FUN 06) parameter on page 125.
Theory of Operation section 7.4, Deceleration Control on page 149.

P17	Decel End Level	CFN 16

LED Display

20

LCD Display

```
CFN: Decel End
16        20 %
```

Range

1 – 99 % of phase angle firing **(Default 20%)**

Description

Stop Mode (P15/CFN14) set to Voltage Deceleration:
The voltage deceleration profile utilizes an open loop S-curve voltage ramp profile. The Decel End Level parameter sets the ending voltage level for the voltage deceleration ramp profile. The deceleration ending level is not a precise percentage of actual line voltage, but defines an ending point on the S-curve deceleration profile.

A typical voltage decel end level setting is between 10% and 20%. If the motor stops rotating before the deceleration time has expired, increase this parameter value. If the motor is still rotating when the deceleration time has expired, decrease this parameter value. If the value is set too low a "No Current at Run" fault may occur during deceleration.

⌘ **NOTE:** The deceleration end level cannot be set greater than the decel begin level.

Stop Mode (P15/CFN14) set to TruTorque Deceleration:
The decel end level parameter sets the ending torque level for the TruTorque deceleration ramp profile.

A typical TruTorque decel end level setting is between 10% and 20%. If the motor stops rotating before the deceleration time has expired, increase this parameter value. If the motor is still rotating when the deceleration time has expired, decrease this parameter value.

See Also

Stop Mode (P15 / CFN 14) parameter on page 87.
Decel Begin Level (P16 / CFN 15) parameter on page 88.
Decel Time (P18 / CFN 17) parameter on page 90.
Controlled Fault Stop Enable (P43 / PFN 12) parameter on page 105.
Theory of Operation section 7.4, Deceleration Control on page 149.

P18	Decel Time	CFN 17

LED Display

15

LCD Display

```
CFN: Decel Time
17        15 sec
```

Range

1 – 180 seconds **(Default 15)**

Description

The Decel Time parameter sets the time that the deceleration profile is applied to the motor and sets the slope of the deceleration ramp profile. When in voltage decel mode, this time sets the time between applying the initial decel level to the final decel level.

⌘ **NOTE**: If the motor is not up to speed when a stop is commanded, the voltage decel profile begins at the lower of either the decel begin level setting or at the motor voltage level when the stop is commanded. Although the profile may be adjusted, the deceleration time remains the same.

When in the TruTorque deceleration mode, the decel time sets the time between when a stop is commanded and when the decel end torque level is applied.

If the motor stops rotating before the decel time expires, decrease the decel time parameter. If the motor is still rotating when the decel time expires, increase the decel time parameter.

A typical decel time is 20 to 40 seconds.

⌘ **NOTE:** Depending on the motor load and the decel parameter settings, the motor may or may not be fully stopped at the end of the deceleration time.

See Also

Stop Mode (P15 / CFN 14) parameter on page 87.
Decel Begin Level (P16 / CFN 15) parameter on page 88.
Decel End Level (P17 / CFN 16) parameter on page 89.
Controlled Fault Stop Enable (P43 / PFN 12) parameter on page 105.
Theory of Operation section 7.4, Deceleration Control on page 149.

P19	DC Brake Level	CFN 18

LED Display

25

LCD Display

```
CFN:Brake Level
18        25 %
```

Range

10 – 100 % of available brake torque **(Default 25%)**

Description

When the Stop Mode (P15 / CFN 14) is set to DC brake, the DC Brake Level parameter sets the level of DC current applied to the motor during braking. The desired brake level is determined by the combination of the system inertia, system friction, and the desired braking time. If the motor is braking too fast the level should be reduced. If the motor is not braking fast enough the level should be increased. Refer to Nema MG1, Parts 12 and 20 for maximum load inertia. A Thermistor, Thermostat or RTD MUST be installed to protect the motor.

DC Brake Function Programming Steps:

1. The DC Brake function may be enabled by setting the stop mode (P15 / CFN 14) to DC Brake.
2. Once this function is enabled, a relay output configuration (P52,53,54 / I/O 05,06,07) must be used to control the DC brake contactor or 7th SCR gate drive card during braking. It is recommended to use Relay K3 - (P54 / I/O 07).

⌘ **NOTE:** Standard braking
- For load inertia less than 6 x motor inertia

⌘ **NOTE:** Heavy duty braking
- For NEMA MG1 parts 12 and 20 maximum load inertia

⌘ **NOTE:** When DC injection braking is utilized, discretion must be used when setting up the DC Brake Level. Motor heating during DC braking is similar to motor heating during starting. Even though the Motor OL is active (if not set to "Off") during DC injection braking, excessive motor heating could still result if the load inertia is large or the brake level is set too high. Caution must be used to assure that the motor has the thermal capacity to handle braking the desired load in the desired period of time without excessive heating.

⌘ **NOTE:** Consult motor manufacturer for high inertia applications.

⌘ **NOTE:** Not to be used as an emergency stop. When motor braking is required even during a power outage an Electro mechanical brake must be used.

See Also

Stop Mode (P15 / CFN 14) parameter on page 87.
DC Brake Time (P20 / CFN 19) parameter on page 92.
DC Brake Delay (P21 / CFN 20) parameter on page 93.
Controlled Fault Stop Enable (P43 / PFN 12) parameter on page 105.
Digital Input (P48-50 / I/O 01-03) parameters on page 110.
Theory of Operation section 7.1, Solid State Motor Overload Protection, on page 132.
Theory of Operation section 7.5.9, DC Injection Braking Control, on page 156.

P20	DC Brake Time	CFN 19

LED Display

5

LCD Display

```
CFN: Brake Time
19        5 sec
```

Range 1 – 180 Seconds **(Default 5)**

Description When the Stop Mode (P15 / CFN 14) is set to "DC brake", the DC Brake Time parameter sets the time that DC current is applied to the motor. The required brake time is determined by the combination of the system inertia, system friction, and the desired braking level. Increase the brake time if the motor is still rotating when the braking finishes to minimize unnecessary motor heating.

See Also

Motor Running Overload Class (P3 / QST 03) parameter on page 76.
Stop Mode (P15 / CFN 14) parameter on page 87.
DC Brake Level (P19 / CFN 18) parameter on page 91.
DC Brake Delay (P21 / CFN 20) parameter on page 93.
Controlled Fault Stop Enable (P43 / PFN 12) parameter on page 105.
Theory of Operation section 7.5.9, DC Injection Braking Control, on page 156.

P21 DC Brake Delay CFN 20

LED Display

0.2

LCD Display

```
CFN:Brake Delay
20       0.2 sec
```

Range 0.1 – 3.0 Seconds **(Default 0.2)**

Description When the Stop Mode (P15, CFN 14) is set to "DC brake", the DC Brake Delay time is the time delay between when a stop is commanded and the DC braking current is applied to the motor. This delay allows the residual magnetic field and motor counter EMF to decay before applying the DC braking current. If a large surge of current is detected when DC braking is first engaged increase the delay time. If the delay before the braking action begins is too long then decrease the delay time. In general, low horsepower motors can utilize shorter delays while large horsepower motor may require longer delays.

See Also
Stop Mode (P15 / CFN 14) parameter on page 87.
DC Brake Level (P19 / CFN 18) parameter on page 91.
DC Brake Time (P20 / CFN 19) parameter on page 92.
Theory of Operation section 7.5.9, DC Injection Braking Control, on page 156.

P22 Initial Motor Current 2 CFN 06

LED Display

100

LCD Display

```
CFN: Init Cur 2
06      100 %
```

Range 50 – 600 % of FLA **(Default 100%)**

Description The Initial Current 2 parameter is set as a percentage of the Motor FLA (P1 / QST 01) parameter setting when the second ramp is active. Refer to the Initial Current 1 (P6 / CFN 03) parameter on page 79 for description of operation.

See Also
Initial Current 1 (P6 / QST 06) parameter on page 79.
Digital Input Configuration (P48-50 / I/O 01-03) parameters on page 110 .
Theory of Operation section 7.3.1, Current Ramp Settings, Ramps and Times on page 140.
Theory of Operation section 7.3.6, Dual Acceleration Ramp Control on page 147.

P23 Maximum Motor Current 2 CFN 07

LED Display

600

LCD Display

```
CFN: Max Cur 2
07      600 %
```

Range 100 – 800 % of FLA **(Default 600%)**

Description The Maximum Current 2 parameter is set as a percentage of the Motor FLA (P1 / QST 01) parameter setting, when the second ramp is active. Refer to the Maximum Current 1 (P7 / CFN 04) parameter on page 80 for description of operation.

See Also
Maximum Current 1 (P7 / QST 07) parameter on page 80.
Digital Input Configuration (P48 / I/O 01-03) parameters on page 110.
Theory of Operation section 7.3.1, Current Ramp Settings, Ramps and Times on page 140.
Theory of Operation section 7.3.6, Dual Acceleration Ramp Control, on page 147.

P24 Ramp Time 2 CFN 05

LED Display

15

LCD Display

```
CFN:Ramp Time 2
05        15 sec
```

Range 0 – 300 seconds **(Default 15)**

Description The Ramp Time 2 parameter sets the time it takes for the starter to allow the current to go from the initial current to the maximum current when the second ramp is active. Refer to the Ramp Time 1 (P8 / CFN 02) parameter on page 83 for description of operation.

See Also
Ramp Time 1 (P8 / QST 08) parameter on page 83.
Digital Input Configuration (P48-P50 / I/O 01-03) parameters on page 110.
Theory of Operation section 7.3.1, Current Ramp Settings, Ramp and Times on page 140.
Theory of Operation section 7.3.6, Dual Acceleration Ramp Control, on page 147.

P25 Kick Level 2 CFN 12

LED Display

OFF

LCD Display

```
CFN: Kick Lvl 2
12  Off
```

Range Off, 100 – 800% of FLA **(Default Off)**

Description The Kick Level 2 parameter sets the current level that precedes any ramp when a start is first commanded when the second ramp is active. Refer to the Kick Level 1 (P13 / CFN 10) parameter on page 88 for description of operation.

See Also
Kick Level 1 (P13 / CFN 10) parameter on page 88.
Digital Input Configuration (P48-50 / I/O 01-03) parameters on page 110.
Theory of Operation section 7.3.2, Programming A Kick Current on page 141.
Theory of Operation section 7.3.6, Dual Acceleration Ramp Control on page 147.

P26 Kick Time 2 CFN 13

LED Display

1.0

LCD Display

```
CFN:Kick Time 2
13       1.0 sec
```

Range 0.1 – 10.0 seconds **(Default 1.0)**

Description The Kick Time 2 parameter sets the length of time that the kick current level is applied to the motor when the second ramp is active. Refer to the Kick Time 1 (P14 / CFN 11) parameter on page 88 for description of operation.

P27 Preset Slow Speed CFN 21

LED Display

OFF

LCD Display

```
CFN: SSpd Speed
21   Off
```

Range Off, 7.1%, 14.3 % **(Default Off)**

Description The Preset Slow Speed parameter sets the speed of motor operation. When set to "Off", slow speed operation is disabled.

Slow speed operation is commanded by programming one of the digital inputs to either "Slow Speed Forward" or "Slow Speed Reverse". Energizing the Slow Speed Input when the starter is in idle will initiate slow speed operation.

⌘ **NOTE:** When the motor is operating at slow speeds its cooling capacity can be greatly reduced. Therefore, the running time of the motor at a given current level is dependant on the motor's thermal capacity. Although the Motor OL is active (if not set to "Off") during slow speed operation, it is recommended that the motor temperature be monitored when slow speed is used for long periods of time.

See Also

Slow Speed Current Level (P27 / CFN 22) parameter on page 95.
Slow Speed Time Limit (P29 / CFN 23) parameter on page 96.
Digital Input Configuration (P48-P50 / I/O 01-03) parameters on page 110.
Relay Output Configuration (P52-54 / I/O 05-07) parameters on page 112.
Theory of Operation section 7.6.2, Slow Speed Operation on page 157.

⌘ **NOTE:** Remote Source (P5 / QST 05) must be set to 'Terminal'.

⌘ **NOTE:** For Continuous Slow Speed Operation, an RC2 is required.

P28 Preset Slow Speed Current Level CFN 22

LED Display

100

LCD Display

```
CFN: SSpd Curr
22       100 %
```

Range 10 – 400 % FLA **(Default 100%)**

Description The Preset Slow Speed Current Level parameter selects the level of current applied to the motor during slow speed operation. The parameter is set as a percentage of motor full load amps (FLA). This value should be set to the lowest possible current level that will properly operate the motor.

See Also

Motor Running Overload Class (P3 / QST 03) parameter on page76.
Slow Speed Time Limit (P29 / CFN 23) parameter on page 96.
Theory of Operation section 7.6.2, Slow Speed Operation on page 157.

P29 Slow Speed Time Limit CFN 23

LED Display

10

LCD Display

```
CFN: SSpd Timer
23       10 sec
```

Range Off, 1 – 900 Seconds **(Default 10)**

Description The Slow Speed Time Limit parameter sets the amount of time that continuous operation of slow speed may take place. When this parameter is set to "Off", the timer is disabled. This parameter can be used to limit the amount of slow speed operation to protect the motor and/or load.

⌘ **NOTE:** The Slow Speed Time Limit includes the time used for the Slow Speed Kick if kick is enabled.

⌘ **NOTE:** The Slow Speed Time Limit resets when the motor is stopped. Therefore, this timer does not prevent the operator from stopping slow speed operation and re-starting the motor, which can result in the operation time of the motor being exceeded.

⌘ **NOTE:** When the motor is operating at slow speeds, its cooling capacity can be greatly reduced. Therefore, the running time of the motor at a given current level is dependant on the motor's thermal capacity. Although the Motor OL is active (if not set to "Off") during slow speed operation it is recommended that the motor temperature be monitored if slow speed is used for long periods of time.

See Also Motor Running Overload Class (P3 / QST 03) parameter on page 76.
Slow Speed Current Level (P28 / CFN 22) parameter on page 95.
Theory of Operation section 7.6.2, Slow Speed Operation on page 157.

P30 Slow Speed Kick Level CFN 24

LED Display

OFF

LCD Display

```
CFN:SSpd Kick Cu
24   Off
```

Range Off, 100 – 800 % FLA **(Default Off)**

Description The Slow Speed Kick Level sets the short-term current level that is applied to the motor to accelerate the motor for slow speed operation. If set to "Off" the Slow Speed Kick feature is disabled. Slow speed kick can be used to "break loose" difficult to start loads while keeping the normal slow speed current level at a lower level.

This parameter should be set to a midrange value and then the Slow Speed Kick Time should be increased in 0.1 second intervals until the kick is applied long enough to start the motor rotating. If the motor does not start rotating then increase the Slow Speed Kick Level and begin adjusting the kick time from 1.0 seconds again.

If the motor initially accelerates too fast then reduce the Slow Speed Kick Level and/or reduce the Slow Speed Kick Time.

See Also Kick Level 1 (P13 / CFN 10) parameter on page 86.
Slow Speed Kick Time (P31 / CFN 25) parameter on page 97.
Theory of Operations section 7.6.2, Slow Speed Operation on page 157.

P31	Slow Speed Kick Time	CFN 25

LED Display

1.0

LCD Display

```
CFN:SSpd Kick T
25       1.0 sec
```

Range

0.1 – 10.0 seconds **(Default 1.0)**

Description

The Slow Speed Kick Time parameter sets the length of time that the Slow Speed Kick current level (P30, CFN 24) is applied to the motor at the beginning of slow speed operation. After the Slow Speed Kick Level is set, the Slow Speed Kick Time should be adjusted so that the motor starts rotating when a slow speed command is given.

If the motor initially accelerates too fast then reduce the Slow Speed Kick Level (P30 / CFN 24) and/or reduce the Slow Speed Kick Time.

See Also

Slow Speed Kick Level (P30 / CFN 24) parameter on page 96.
Theory of Operations section 7.6.2, Slow Speed Operation on page 157.

Jump to Parameter — PFN 00

By changing the value of this parameter and pressing [ENTER], you can jump directly to any parameter within that group.

P32 — Over Current Trip Level — PFN 01

LED Display

OFF

LCD Display

```
PFN:Over Cur Lvl
01    Off
```

Range Off, 50 – 800 % of FLA **(Default Off)**

Description If the MX^2 detects a one cycle, average current that is greater than the level defined, an over current alarm condition exists and any relays programmed as alarm will energize. The over current timer starts a delay time. If the over current still exists when the delay timer expires, the starter Over Current Trips (F31) and any relay programmed as fault relay changes state.

The Over Current Trip is only active in the UTS state, Energy Saver state, Current follower or while in the Phase Control mode.

A relay can be programmed to change state when an over current alarm condition is detected.

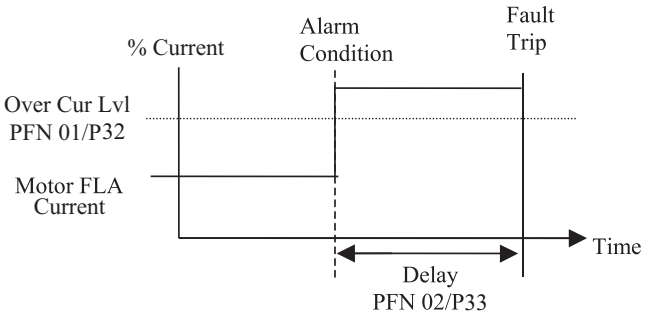

See Also

Over Current Time (P33 / PFN 02) parameter on page 99.
Auto Reset Limit (P42 / PFN 11) parameter on page 104.
Controlled Fault Stop Enable (P43 / PFN 12) parameter on page 105.
Relay Output Configuration (P52-P54 / I/O 05-07) parameters on page 112.

P33	Over Current Trip Delay Time	PFN 02

LED Display

0.1

LCD Display

```
PFN:Over Cur Tim
02       0.1 sec
```

Range

Off, 0.1 – 90.0 seconds **(Default 0.1)**

Description

The Over Current Trip Delay Time parameter sets the period of time that the motor current must be greater than the Over Current Level (P32 / PFN 01) parameter before an over current fault and trip occurs.

If "Off" is selected, the over current timer does not operate and the starter does not trip. It energizes any relay set to Over current until the current drops or the starter trips on an overload.

A shear pin function can be implemented by setting the delay to its minimum value.

See Also

Over Current Level (P32 / PFN 01) parameter on page 98.
Auto Reset Limit (P42 / PFN 11) parameter on page 104.
Controlled Fault Stop Enable (P43 / PFN 12) parameter on page 105.
Relay Output Configuration (P52-54 / I/O 05-07) parameters on page 112.

P34 Under Current Trip Level PFN 03

LED Display

OFF

LCD Display

```
PFN:Undr Cur Lvl
03   Off
```

Range Off, 5 – 100 % of FLA **(Default Off)**

Description If the MX^2 detects a one cycle, average current that is less than the level defined, an under current alarm condition exists and any relays programmed as alarm will energize. The under current timer starts a delay time. If the under current still exists when the delay time expires, the starter Under Current Trips (F34) and any relay programmed as fault relay changes state.

The Under Current Trip Level is only active in the UTS state, Energy Saver state, Current follower or while in the Phase Control mode.

A relay can be programmed to change state when an under current alarm condition is detected.

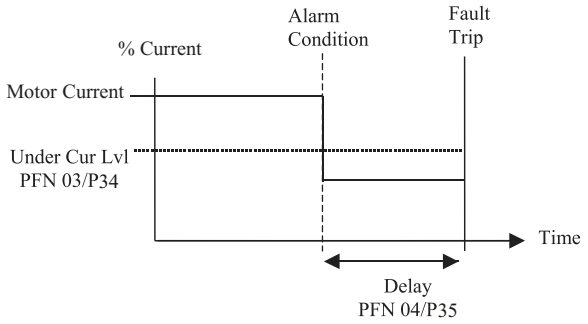

See Also
Under Current Time (P35 / PFN 04) parameter on page 100.
Auto Reset Limit (P42 / PFN 11) parameter on page 104.
Controlled Fault Stop Enable (P43 / PFN 12) parameter on page 105.
Relay Output Configuration (P52-54 / I/O 05-07) parameters on page 112.

P35 Under Current Trip Delay Time PFN 04

LED Display

0.1

LCD Display

```
PFN:Undr Cur Tim
04       0.1 sec
```

Range Off, 0.1 – 90.0 seconds **(Default 0.1)**

Description The Under Current Trip Delay Time parameter sets the period of time that the motor current must be less than the Under Current Trip Level (P34 / PFN 03) parameter before an under current fault and trip occurs.

If "Off" is selected, the under current timer does not operate and the starter does not trip. It energizes any relay set to Undercurrent until the current rises.

See Also
Under Current Trip Level (P34 / PFN 03) parameter on page 100.
Auto Reset Limit (P42 / PFN 11) parameter on page 104.
Controlled Fault Stop Enable (P43 / PFN 12) parameter on page 105.
Relay Output Configuration (P52-54 / I/O 05-07) parameters on page 112.

P36	Current Imbalance Trip Level	PFN 05

LED Display

15

LCD Display

```
PFN:Cur Imbl Lvl
05        15 %
```

Range Off, 5 – 40 % **(Default 15%)**

Description The Current Imbalance Trip Level parameter sets the imbalance that is allowed before the starter shuts down. The current imbalance must exist for 10 seconds before a fault occurs.

Current is less than the FLA setting

The equation for the current imbalance is:

$$\%imbalance = \frac{(Iave - Imax)}{FLA} \times 100\%$$

Iave = average current
Imax = greatest of: |L1-Iave| or |L2-Iave| or |L3-Iave|
FLA = value programmed into P1

Current is greater than the FLA setting

The equation for the current imbalance is:

$$\%imbalance = \frac{(Iave - Imax)}{Iave} \times 100\%$$

Iave = average current
Imax = greatest of: |L1-Iave| or |L2-Iave| or |L3-Iave|
FLA = value programmed into P1

If the highest calculated current imbalance is greater than the current imbalance level for 10 seconds, the starter shuts down the motor and declares a Fault 37 (Current Imbalance).

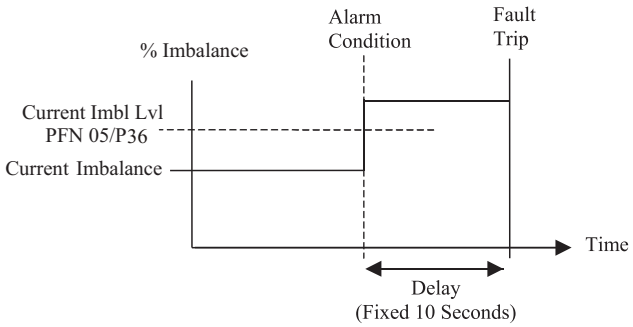

See Also Auto Reset Limit (P42 / PFN 11) parameter on page 104.
Controlled Fault Stop Enable (P43 / PFN 12) parameter on page 105.

P37	Residual Ground Fault Trip Level	PFN 06

LED Display

OFF

LCD Display

```
PFN:Resid GF Lvl
06    Off
```

Range Off, 5 – 100 % FLA **(Default Off)**

Description The Residual Ground Fault Trip Level parameter sets a ground fault current trip or indicate level that can be used to protect the system from a ground fault condition. The starter monitors the instantaneous sum of the three line currents to detect the ground fault current.

The ground fault current has to remain above the ground fault level for 3 seconds before the starter recognizes a ground fault condition. Once the starter recognizes a ground fault condition, it shuts down the motor and declares a Fault 38 (Ground Fault).

If a programmable relay is set to ground fault (GND), the starter energizes the relay when the condition exists.

A typical value for the ground fault current setting is 10% to 20% of the full load amps of the motor.
⌘ **NOTE:** This is often referred to as residual ground fault protection. This type of protection is meant to provide machine ground fault protection only. It is not meant to provide human ground fault protection.

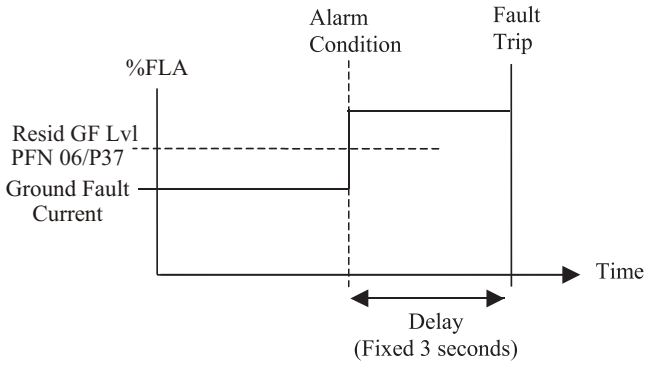

⌘ **NOTE:** The MX^2 residual ground fault protection function is meant to detect ground faults on solidly grounded systems. Use on a high impedance or floating ground power system may impair the usefulness of the MX^2 residual ground fault detection feature.

⌘ **NOTE:** Due to uneven CT saturation effects and motor and power system variations, there may be small values of residual ground fault currents measured by the MX^2 during normal operation.

See Also

Auto Reset Limit (P42 / PFN 11) parameter on page 104.
Controlled Fault Stop Enable (P43 / PFN 12) parameter on page 105.
Relay Output Configuration (P52-54 / I/O 05-07) parameters on page 112.

P38 Over Voltage Trip Level PFN 07

LED Display

OFF

LCD Display

PFN:Over Vlt Lvl
07 Off

Range Off, 1 – 40 % **(Default Off)**

Description If the MX^2 detects a one cycle input phase voltage that is above the Over Voltage Trip Level, the over/under voltage alarm is shown and the voltage trip timer begins counting. The delay time must expire before the starter faults. The over voltage condition and the phase is displayed.

⌘ **NOTE**: For the over voltage protection to operate correctly, the rated voltage parameter (P76 / FUN05) must be set correctly.

⌘ **NOTE:** The voltage level is only checked when the starter is running.

See Also

Under Voltage Level (P39 / PFN 08) parameter on page 103.
Voltage Trip Time (P40 / PFN 09) parameter on page 104.
Auto Reset Limit (P42 / PFN 11) parameter on page 104.
Controlled Fault Stop Enable (P43 / PFN 12) parameter on page 105.
Rated Voltage (P76 / FUN 05) parameter on page 125.

P39 Under Voltage Trip Level PFN 08

LED Display

OFF

LCD Display

PFN:Undr Vlt Lvl
08 Off

Range Off, 1 – 40 % **(Default Off)**

Description If the MX^2 detects a one cycle input phase voltage that is below the Under Voltage Trip Level, the over/under voltage alarm is shown and the voltage trip timer begins counting. The delay time must expire before the starter faults. The under voltage condition and the phase is displayed.

⌘ **NOTE:** For the under voltage protection to operate correctly, the Rated Voltage parameter (P76 / FUN05) must be set correctly.

⌘ **NOTE**: The voltage level is only checked when the starter is running.

See Also

Over Voltage Level (P38 / PFN 07) parameter on page 103.
Voltage Trip Time (P40 / PFN 09) parameter on page 104.
Auto Reset Limit (P42 / PFN 11) parameter on page 104.
Controlled Fault Stop Enable (P43 / PFN 12) parameter on page 105.
Rated Voltage (P76 / FUN 05) parameter on page 125.

P40 Over/Under Voltage Trip Delay Time PFN 09

LED Display

0.1

LCD Display

```
PFN:Vlt Trip Tim
09      0.1 sec
```

Range 0.1 – 90.0 seconds **(Default 0.1)**

Description The Voltage Trip Delay Time parameter sets the period of time that either an over voltage (P38 / PFN 07) or under voltage (P39 / PFN 08) condition must exist before a fault occurs.

See Also
Over Voltage Level (P38 / PFN 07) parameter on page 103.
Under Voltage Level (P39 / PFN 08) parameter on page 103.
Auto Reset Limit (P42 / PFN 11) parameter on page 104.
Controlled Fault Stop Enable (P43 / PFN 12) parameter on page 105.

P41 Auto Fault Reset Time PFN 10

LED Display

OFF

LCD Display

```
PFN: Auto Reset
10  Off
```

Range Off, 1 – 900 seconds **(Default Off)**

Description The Auto Fault Reset Time parameter sets the time delay before the starter will automatically reset a fault. For the list of faults that may be auto reset, refer to Appendix B - Fault Codes on page 196.

⌘ **NOTE:** A start command needs to be initiated once the timer resets the fault.

See Also
Auto Reset Limit (P42 / PFN 11) parameter on page 104.
Appendix B - Fault Codes on page 196.

P42 Auto Fault Reset Count Limit PFN 11

LED Display

OFF

LCD Display

```
PFN:Auto Rst Lim
11   Off
```

Range Off, 1 – 10 **(Default Off)**

Description The Auto Fault Reset Count Limit parameter sets the number of times that an auto reset may occur. Once the Auto Reset Limit is reached, faults will no longer be automatically reset.

See Also Auto Fault Reset Time (P41 / PFN 10) parameter on page 104.

⌘ **NOTE:** If the maximum reset count has been reached and the starter has locked out, only a user reset will clear the reset counts.

⌘ **NOTE:** If a few auto resets have been performed but the count has not reached the limit, the number of accumulated resets will be cleared after 15 minutes if another fault does not occur.

⌘ **NOTE:** The count can be always cleared by power cycling the starter.

P43	Controlled Fault Stop Enable	PFN 12

LED Display

On

LCD Display

```
PFN:Ctrl Flt En
12    On
```

Range

Off – On **(Default On)**

Description

A Controlled Fault Stop Enable can occur if this parameter is "On". The controlled stop will occur before the starter trips. During a controlled fault stop, the action selected by the Stop Mode parameter is performed before the starter is tripped. This prevents the occurrence of water hammer etc. in sensitive systems when a less than fatal fault occurs.

⌘ **NOTE:** All relays except the UTS relay are held in their present state until the stop mode action has been completed.

⌘ **NOTE:** Only certain faults can initiate a controlled fault stop. Some faults are considered too critical and cause the starter to stop immediately regardless of the Controlled Fault Stop Enable parameter.

Refer to Appendix B - Fault Codes to determine if a fault may perform a controlled stop.

See Also

Stop Mode (P15 / CFN 14) parameter on page 87.
Appendix B - Fault Codes on page 196.

P44	Independent Starting/Running Overload	PFN 13

LED Display

OFF

LCD Display

```
PFN:Indep S/R OL
13    Off
```

Range

Off – On **(Default Off)**

Description

If "Off"
When this parameter is "Off" the overload defined by the Motor Running Overload Class (P3 / QST 03/PFN 15) parameter is active in all states.

If "On"
When this parameter is "On", the starting and running overloads are separate with each having their own settings. The starting overload class (P45 / PFN 14) is used during motor acceleration and acceleration kick. The running overload class is used during all other modes of operation.

If both the running overload and the starting overload classes are set to "Off", then the existing accumulated motor OL% is erased and no motor overload is calculated in any state.

If the starting overload class is set to "Off" and the running overload class is set to "On", then the I^2t motor overload does NOT accumulate during acceleration kick and acceleration ramping states. However, the existing accumulated OL% remains during starting and the hot/cold motor compensation is still active. The OL% is capped at 99% during starting.

Although there is really no reason to do so, the starting overload class could be set to "On" and the running overload class set to "Off".

See Also

Motor Running Overload Class (P3 / QST 03) parameter on page 76.
Motor Starting Overload Class (P45 / PFN 14) parameter on page 107.
Motor Overload Hot/Cold Ratio (P46 / PFN 16) parameter on page 108.
Motor Overload Cooling Time (P47 / PFN 17) parameter on page 109.
Theory of Operation section 7.1.7, Separate Starting and Running Motor Overload Settings on page 136.

P45 Motor Overload Class Starting PFN 14

LED Display

10

LCD Display

```
PFN:Starting OL
14        10
```

Range Off, 1 – 40 **(Default class 10)**

Description The Motor Overload Class Starting parameter sets the class of the electronic overload when starting. The starter stores the thermal overload value as a percentage value between 0 and 100%, with 0% representing a "cold" overload and 100% representing a tripped overload.

The starting overload class is active during Kicking and Ramping when the Independent Starting/Running Overload (P44 / PFN 13) parameter is set to "On".

When the Motor Starting Overload Class parameter is set to "Off", the electronic overload is disabled while starting the motor.

⌘ **NOTE**: Care must be taken not to damage the motor when turning the starting overload class off or setting to a high value.

⌘ **NOTE:** Consult motor manufacturer data to determine the correct motor OL settings.

See Also

Motor Running Overload Class (P3 / QST 03) parameter on page 76.
Independent Starting/Running Overload (P44 / PFN 13) parameter on page 106.
Motor Overload Hot/Cold Ratio (P46 / PFN 16) parameter on page 108.
Motor Overload Cooling Time (P47 / PFN 17) parameter on page 109.
Relay Output Configuration (P52-P54 / I/O 05-07) parameters on page 112.
Theory of Operation section 7.1, Solid State Motor Overload Protection on page 132.

Motor Overload Class Running PFN 15

See Quickstart group QST 03 - Motor Overload Class Running on page 76 for details.

P46	Motor Overload Hot/Cold Ratio	PFN 16

LED Display

60

LCD Display

```
PFN:OL H/C Ratio
16        60 %
```

Range 0 – 99% **(Default 60%)**

Description The Motor Overload Hot/Cold Ratio parameter defines the steady state overload content (OL_{SS}) that is reached when the motor is running with a current less than full load current (FLA) * Service Factor (SF). This provides for accurate motor overload protection during a "warm" start.

The steady state overload content is calculated by the following formula.
The rise or fall time for the overload to reach this steady state is defined by the Motor Overload Cooling Time parameter.

$$OL_{ss} = \text{OL H/C Ratio} \times \frac{\text{Current}}{\text{FLA}} \times \frac{1}{\text{Current Imbalance Derate Factor}}$$

The default value of 60% for Motor Overload Hot/Cold Ratio parameter is typical for most motors. A more accurate value can be derived from the hot and cold locked rotor times that are available from most motor manufacturers using the following formula.

$$\text{OL H/C Ratio} = \left(1 - \frac{\text{Max Hot Locked Rotor Time}}{\text{Max Cold Locked Rotor Time}}\right) \text{x } 100\%$$

⌘ **NOTE**: Consult motor manufacturer data to determine the correct motor overload settings.

⌘ **NOTE:** During a warm start the starter would be Class 10, and if it's a cold start, the starter would be a class 25.

See Also

Motor Running Overload Class (P3 / QST 03) parameter on page 76.
Independent Starting/Running Overload (P44 / PFN 13) parameter on page 106.
Motor Starting Overload Class (P45 / PFN 14) parameter on page 107.
Motor Overload Cooling Time (P47 / PFN 17) parameter on page 109.
Relay Output Configuration (P52-54 / I/O 05-07) parameters on page 112.
Theory of Operation section 7.1.6, Hot/Cold Motor Overload Compensation on page 135.
Theory of Operation section 7.1.4, Current Imbalance/Negative Sequence Current Compensation on page 134.

P47	Motor Overload Cooling Time	PFN 17

LED Display

30.0

LCD Display

```
PFN:OL Cool Tim
17      30.0 min
```

Range

1.0 – 999.9 minutes **(Default 30.0)**

Description

The Motor Overload Cooling Time parameter is the time to cool from 100% to less than (<) 1%. When the motor is stopped, the overload content reduces exponentially based on Motor Overload Cooling Time parameter.

Refer to the following equation:

$$\text{OL Content} = \text{OL Content when Stopped} * e^{\frac{5}{CoolingTime}t}$$

So, a motor with a set cooling time of 30 minutes (1800 sec) with 100% accumulated OL content cools to <1% OL content in 30 minutes.

⌘ **NOTE**: Consult motor manufacturer data to determine the correct motor cooling time.

See Also

Motor Running Overload Class (P3 / QST 03) parameter on page 76.
Independent Starting/Running Overload (P44 / PFN 13) parameter on page 106.
Motor Starting Overload Class (P45 / PFN 14) parameter on page 107.
Motor Overload Hot/Cold Ratio (P46 / PFN 16) parameter on page 108.
Theory of Operation section 7.1.8, Motor Cooling While Stopped on page 137.
Theory of Operation section 7.1.9, Motor Cooling While Running on page 138.

Jump to Parameter — I/O 00

By changing the value of this parameter and pressing [ENTER], you can jump directly to any parameter within that group.

P48,49,50 — Digital Input Configuration — I/O 01,02,03

	LED Display	LCD Display
P48	StOP	I/O:DI 1 Config 01 Stop
P49	OFF	I/O:DI 2 Config 02 Off
P50	OFF	I/O:DI 3 Config 03 Off

Range

LED	LCD	Description
OFF	Off	Off, Not Assigned, Input has no function. **(Default DI 2 & DI 3)**
StOP	Stop	Stop Command for 3-wire control. **(Default DI 1)**
FH	Fault High	Fault High, Fault when input is asserted, 120V applied.
FL	Fault Low	Fault Low, Fault when input is de-asserted, 0V applied.
Fr	Fault Reset	Reset when input asserted, 120V applied.
dISc	Disconnect	Disconnect switch monitor.
InLn	Inline Cnfrm	Inline contactor feedback.
byP	Bypass Cnfrm	Bypass/2M, bypass contactor feedback, 2M contactor feedback in full voltage or Wye-delta.
EOLr	E OL Reset	Emergency Motor Overload content reset. After an OL trip has occurred. Reset when input asserted, 120V applied.
L-r	Local/Remote	Local/Remote control source, Selects whether the Local Source parameter or the Remote Source parameter is the control source. Local Source is selected when input is de-asserted, 0V applied. Remote Source selected when input asserted, 120V applied.
hd IS	Heat Disable	Heater disabled when input asserted, 120V applied.
hEn	Heat Enable	Heater enabled when input asserted, 120V applied.
rSEL	Ramp Select	Ramp 2 is enabled when input asserted, 120V applied.
SS F	Slow Spd Fwd	Operate starter in slow speed forward mode.
SS r	Slow Spd Rev	Operate starter in slow speed reverse mode.
bd IS	Brake Disabl	Disable DC injection braking.
bEn	Brake Enabl	Enable DC injection braking.
runE	Run Enable	When High, starter will run. When Low, starter stops.
rund	Run Disable	When High, starter will stop. When Low, starter runs.

Description

I/O parameters 1 - 3 configure which features are performed by the D1 to D3 terminals.

See Also

Local Source (P4 / QST 04) parameter on page 77 .
Remote Source (P5 / QST 05) parameter on page 78.
Bypass Feedback Time (P64 / I/O 17) parameter on page 118.
Heater Level (P73 / FUN 08) parameter on page 123.
Theory of Operation section 7.1.10, Emergency Motor Overload Reset on page 138.
Theory of Operation section 7.3.6, Dual Acceleration Ramp Control on page 147.
Theory of Operation section 7.8, Wye-Delta Operation on page 160.
Theory of Operation section 7.13, Start/Stop Control with a Hand/Off/Auto Selector Switch on page 168.

P51	Digital Fault Input Trip Time	I/O 04

LED Display

0.1

LCD Display

```
I/O:Din Trp Time
04      0.1 sec
```

Range 0.1-90.0 Seconds **(Default 0.1 Sec)**

Description: The Digital Fault Input Trip Time parameter sets the length of time the Digital input must be high or low before a trip occurs. This delay time only functions for fault high and fault low.

See Also Digital Input Configuration (P48-50 / I/O 01-03) parameters on page 110.

P52, 53, 54	Relay Output Configuration	I/O 05, 06, 07

	LED Display	LCD Display
P52	FLFS	I/O: R1 Config 05 Fault FS
P53	OFF	I/O: R2 Config 06 Off
P54	OFF	I/O: R3 Config 07 Off

Range

LED	LCD	Description
OFF	Off	Off, Not Assigned. May be controlled over Modbus **(Default R2 & R3)**
FLFS	Fault FS	Faulted – Fail Safe operation. Energized when no faults present, de-energized when faulted. **(Default R1)**
FLnF	Fault NFS	Faulted– Non Fail Safe operation. Energized when faulted.
run	Running	Running, starter running, voltage applied to motor.
utS	UTS	Up to Speed, motor up to speed or transition to for Wye/Delta Operation.
AL	Alarm	Alarm, any alarm condition present.
rdYr	Ready	Ready, starter ready for start command.
LOC	Locked Out	Locked Out.
OC	Overcurrent	Overcurrent Alarm, overcurrent condition detected.
UC	Undercurrent	Undercurrent Alarm, undercurrent condition detected.
OLA	OL Alarm	Overload Alarm.
ShFS	Shunt FS	Shunt Trip Relay – Fail Safe operation, energized when no shunt trip. fault present, de-energized on shunt trip fault.
ShnF	Shunt NFS	Shunt Trip Relay – Non Fail Safe operation, de-energized when no shunt trip fault present, energized on shunt trip fault.
GFLt	Ground Fault	A Ground Fault trip has occurred.
ES	Energy Saver	Operating in Energy Saver Mode.
HEAt	Heating	Motor Heating, starter applying heating pulses to motor.
SSPd	Slow Spd	Starter operating in slow speed mode.
SS F	Slow Spd Fwd	Starter operating in slow speed forward mode.
SS r	Slow Spd Rev	Starter operating in slow speed reverse mode.
dcb	Braking	Starter is applying DC brake current to motor.
FAn	Cool Fan Ctl	Heatsink fan control.

Description

I/O parameters 1 - 3 configure which functions are performed by the R1 to R3 relays.

See Also

Up To Speed Time (P9 / QST 09) parameter on page 82.
Over Current Level (P32 / PFN 01) parameter on page 98.
Under Current Level (P34 / PFN 03) parameter on page 100.
Residual Ground Fault Level (P37 / PFN 06) parameter on page 102.
Inline Configuration (P63 / I/O 16) parameter on page 118.
Heater Level (P73 / FUN 08) parameter on page 123.
Energy Saver (P72 / FUN 09) parameter on page 122.
Theory of Operation section 7.1.3, Motor Overload Operation on page 134.
Theory of Operation section 7.8, Wye-Delta Operation on page 160.
Theory of Operation section 7.9, Across The Line (Full Voltage Starter) on page 163.
Appendix B - Fault Codes on page 196.

P55	Analog Input Trip Type	I/O 08

LED Display

OFF

LCD Display

```
I/O:Ain Trp Type
08  Off
```

Range

LED	LCD	Description
OFF	Off	Off, Disabled. **(Default)**
Lo	Low Level	Low, Fault if input signal below preset trip level.
HI	High Level	High, Fault if input signal above preset trip level.

Description

The analog input is the reference input for a starter configured as a Phase Controller or Current Follower. In addition, the Analog Input Trip Type parameter allows the user to set a "high" or "low" comparator based on the analog input. If the type is set to" Low", then a fault occurs if the analog input level is below the trip level for longer than the trip delay time. If the type is set to "High", then a fault occurs if the analog input level is above the trip level for longer than the trip delay time. This function is only active when the motor is running.

This feature can be used in conjunction with using the analog input as a reference for a control mode in order to detect an open 4-20mA loop providing the reference. Set the Analog Input Trip Type parameter to "Low" and set the Analog Input Trip Level (P56 / I/O 09) parameter to a value less than (<) 20%.

⌘ **NOTE:** The DIP switch (SW1) on the card changes the analog input and analog output between 0-10V or 0-20mA. See Figure 18 to see DIP Switch Settings. ANALOG INPUT SW1-1 ANALOG OUTPUT SW1-2.

See Also

Analog Input Trip Level (P56 / I/O 09) parameter on page 114.
Analog Input Trip Time (P57 / I/O 10)parameter on page 114.
Analog Input Span (P58 / I/O 11) parameter on page 115.
Analog Input Offset (P59 / I/O 12) parameter on page 116.
Starter Type (P74 / FUN 07) parameter on page 124.
Theory of Operation section 7.11, Phase Control on page 165.
Theory of Operation section 7.12, Current Follower on page 167.

P56 Analog Input Trip Level I/O 09

LED Display

50

LCD Display

```
I/O:Ain Trp Lvl
09       50 %
```

Range 0 – 100% **(Default 50%)**

Description The Analog Input Trip Level parameter sets the analog input trip or fault level.

This feature can be used to detect an open 4-20mA loop by setting the parameter to "Low" and setting the parameter to a value less than (<) 20%.

⌘ **NOTE:** The analog input trip level is NOT affected by the Analog Input Offset or Analog Input Span parameter settings. Therefore, if the trip level is set to 10% and the Analog Input Trip Type (P55 / I/O 08) parameter is set to "Low", a fault occurs when the analog input signal level is less than (<) 1V or 2mA regardless of what the Analog Input and Analog Input Span parameters values are set to.

⌘ **NOTE:** The DIP switch (SW1) on the card changes the analog input and analog output between 0-10V or 0-20mA. See Figure 18 to see DIP Switch Settings. ANALOG INPUT SW1-1 ANALOG OUTPUT SW1-2.

See Also

Analog Input Trip Type (P55 / I/O 08) parameter on page 113.
Analog Input Trip Level (P56 / I/O 09) parameter on page 114.
Analog Input Span (P58 / I/O 11) parameter on page 115.
Analog Input Offset (P59 / I/O 12) parameter on page 116.

P57 Analog Input Trip Delay Time I/O 10

LED Display

0.1

LCD Display

```
I/O:Ain Trp Tim
10       0.1 sec
```

Range 0.1 – 90.0 seconds **(Default 0.1)**

Description The Analog Input Trip Delay Time parameter sets the length of time the analog input trip level (P56 / I/O 09) must be exceeded before a trip occurs.

⌘ **NOTE:** The DIP switch (SW1) on the card changes the analog input and analog output between 0-10V or 0-20mA. See Figure 18 to see DIP Switch Settings. ANALOG INPUT SW1-1 ANALOG OUTPUT SW1-2.

See Also

Analog Input Trip Type (P55 / I/O 08) parameter on page 113.
Analog Input Trip Level (P56 / I/O 09) parameter on page 114.
Analog Input Span (P58 / I/O 11) parameter on page 115.
Analog Input Offset (P59 / I/O 12) parameter on page 116.

P58	Analog Input Span	I/O 11

LED Display

100

LCD Display

```
I/O:  Ain Span
11      100 %
```

Range 1 – 100% **(Default 100%)**

Description The analog input can be scaled using the Analog Input Span parameter.

Examples:
For a 0-10V input or 0-20mA input, a 100% Analog Input Span setting results in a 0% input reading with a 0V input and a 100% input reading with a 10V input.

For a 0-5V input, a 50% Analog Input Span setting results in a 0% input reading with a 0V input and a 100% input reading with a 5V input.

For a 4-20mA input, a 80% Analog Input Span setting and a 20% Analog Input Offset setting results in a 0% input reading at 4mA and a 100% input reading at 20mA.

⌘ **NOTE:** The DIP switch (SW1) on the card changes the analog input and analog output between 0-10V or 0-20mA. See Figure 18 to see DIP Switch Settings. ANALOG INPUT SW1-1 ANALOG OUTPUT SW1-2.

⌘ **NOTE:** Input signal readings are clamped at a 100% maximum.

Example: 4ma = 0% input, 20ma = 100% input

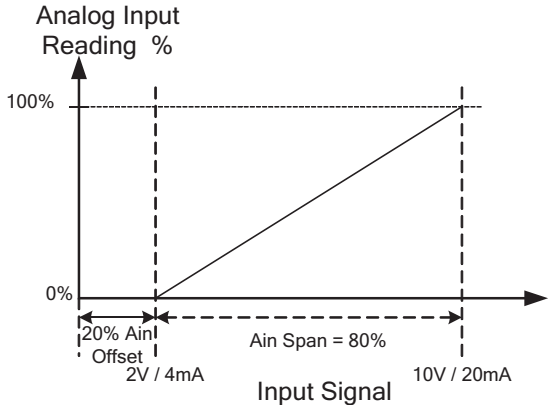

See Also

Analog Input Trip Level (P56 / I/O 09) parameter on page 114.
Analog Input Trip Time (P57 / I/O 10) parameter on page 114.
Analog Input Offset (P59 / I/O 12) parameter on page 116.
Starter Type (P74 / FUN 07) parameter on page 124.
Theory of Operation section 7.11, Phase Control on page 165.
Theory of Operation section 7.12, Current Follower on page 167.

P59 Analog Input Offset I/O 12

LED Display

0

LCD Display

```
I/O: Ain Offset
12        0 %
```

Range 0 – 99% **(Default 0%)**

Description The analog input can be offset so that a 0% reading can occur when a non-zero input signal is being applied.

Example: Input level of 2V (4mA) => 0% input. In this case the Analog Input Offset parameter should be set to 20% so that the 2v (4mA) input signal results in a 0% input reading.

⌘ **NOTE:** The DIP switch (SW1) on the card changes the analog input and analog output between 0-10V or 0-20mA. See Figure 18 to see DIP Switch Settings. ANALOG INPUT SW1-1 ANALOG OUTPUT SW1-2.

⌘ **NOTE:** For a 4-20mA input, set the Analog Input Span to 80% and the Analog Input Offset to 20%.

⌘ **NOTE:** The measured input reading is clamped at 0% minimum.

See Also

Analog Input Trip Level (P56 / I/O 09) parameter on page 114.
Analog Input Trip Time (P57 / I/O 10) parameter on page 114.
Analog Input Span (P58 / I/O 11) parameter on page 115.
Starter Type (P74 / FUN 07) parameter on page 124.
Theory of Operation section 7.11, Phase Control on page 165.
Theory of Operation section 7.12, Current Follower on page 167.

P60 Analog Output Function I/O 13

LED Display

0

LCD Display

```
I/O: Aout Fctn
13  Off
```

Range

LED	LCD	Description
0	Off	Off, Disabled **(Default)**
1	0 – 100% Curr	Based on per cycle RMS values
2	0 – 200% Curr	Based on per cycle RMS values
3	0 – 800% Curr	Based on per cycle RMS values
4	0 – 150% Volt	Based on per cycle RMS values
5	0 – 150% OL	Motor Thermal Overload
6	0 – 10 kW	Based on filtered V and I values
7	0 – 100 kW	Based on filtered V and I values
8	0 – 1 MW	Based on filtered V and I values
9	0 – 10 MW	Based on filtered V and I values
10	0 – 100% Ain	The output value takes into account the inputs span and offset settings
11	0 – 100% Firing	Output Voltage to Motor, based on SCR firing angle
12	Calibration	Calibration, full (100%) output

Description The Analog Output Function parameter selects the function of the analog output. The available analog output function selections and output scaling are shown below. The analog output is updated every 25msec.

⌘ **NOTE:** The DIP switch (SW1) on the card changes the analog input and analog output between 0-10V or 0-20mA. See Figure 18 to see DIP Switch Settings. ANALOG INPUT SW1-1 ANALOG OUTPUT SW1-2.

See Also

Analog Output Span (P61 / I/O 14) parameter on page 117.
Analog Output Offset (P62 / I/O 15) parameter on page 117.
Theory of Operation section 7.11, Phase Control on page 165.
Theory of Operation section 7.12, Current Follower on page 167.

P61 Analog Output Span I/O 14

LED Display

100

LCD Display

```
I/O: Aout Span
14      100 %
```

Range 1 – 125% **(Default 100%)**

Description The analog output signal can be scaled using the Analog Output Span parameter. For a 0-10V output or 0-20mA output, a 100% scaling outputs the maximum voltage (10V) or current (20mA) when the selected output function requests 100% output. A scale of 50% outputs 50% voltage/current when the analog output function requests a 100% output.

⌘ **NOTE:** The DIP switch (SW1) on the card changes the analog input and analog output between 0-10V or 0-20mA. See Figure 18 to see DIP Switch Settings. ANALOG INPUT SW1-1 ANALOG OUTPUT SW1-2.

⌘ **NOTE:** For a 4-20mA output, set the Analog Output Span to 80% and the Analog Output Offset (P62 / I/O 15) parameter to 20%.

⌘ **NOTE:** The output does not exceed 100% (10V or 20mA).

Example: 0% output => 4mA, 100% output => 20ma

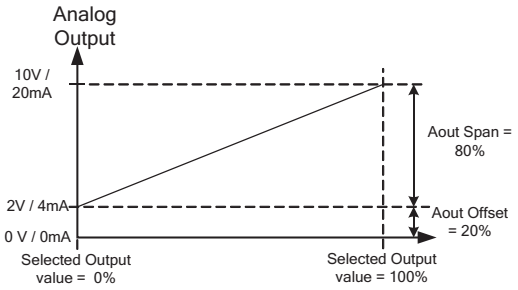

See Also Analog Output Offset (P62 / I/O 15) parameter on page 117.

P62 Analog Output Offset I/O 15

LED Display

0

LCD Display

```
I/O:Aout Offset
15        0 %
```

Range 0 – 99% **(Default 0%)**

Description The analog output signal can be offset using the Analog Output Offset parameter. A 50% offset outputs a 50% output (5V in the 10V case) when 0% is commanded. If the selected variable requests 100% output, the span should be reduced to (100 minus offset) so that a 100% output request causes a 100% output voltage (x% offset + (100-x)%span)=100%.

⌘ **NOTE:** The DIP switch (SW1) on the card changes the analog input and analog output between 0-10V or 0-20mA. See Figure 18 to see DIP Switch Settings. ANALOG INPUT SW1-1 ANALOG OUTPUT SW1-2.

⌘ **NOTE:** For a 4-20mA output, set the Analog Output Span (P61 / I/O 14) to 80% and the Analog Output Offset to 20%.

See Also Analog Output Span (P61 / I/O 14) parameter on page 117.

P63 Inline Configuration I/O 16

LED Display

3.0

LCD Display

```
I/O:Inline Confg
16      3.0 sec
```

Range Off, 0 – 10.0 seconds **(Default 3.0)**

Description The Inline Configuration parameter controls the behavior of the No Line warning, No Line fault, and the Ready relay function.

If the Inline Configuration parameter is set to "Off", then the MX^2 assumes that there is no Inline contactor and that line voltage should be present while stopped. If no line is detected, then a No Line alarm condition exists and the ready condition does not exist. If a start is commanded, then a No Line fault is declared.

If the Inline Configuration parameter is set to a time delay, then the MX^2 assumes that there is an Inline contactor and that line voltage need not be present while stopped. If no line is detected, then the No Line alarm condition does not exist and the ready condition does exist. If a start is commanded and there is no detected line voltage for the time period defined by this parameter, then a “noL” (No Line) fault is declared.

In order to control an inline contactor, program a relay as a Run relay.

⌘ **NOTE:** This fault is different than over/under voltage trip delay time (P40 / PFN 09) since it detects the presence of NO line.

See Also Relay Output Configuration (P52-54 / I/O 05-07) parameters on page 112.

P64 Bypass / 2M Feedback Time I/O 17

LED Display

2.0

LCD Display

```
I/O:Bpas Fbk Tim
17      2.0 sec
```

Range Off, 0.1 – 5.0 seconds **(Default 2.0 sec)**

Description The starter contains a built-in dedicated bypass feedback input that is enabled when the dedicated stack relay is factory programmed to "bypass". The programmable inputs DI 1, DI 2 or DI 3 may also be used to monitor an auxiliary contact from the bypass contactor(s) or in the case of a wye-delta starter the 2M contactor. The digital input is expected to be in the same state as the UTS relay. If it is not, the MX^2 trips on Fault 48 (Bypass Fault).

The Bypass Confirmation input must be different from the UTS relay for the time period specified by the parameter before a fault is declared. There is no alarm associated with this fault.

See Also Digital Input Configuration (P48-P50 / I/O 01-03) parameters on page 110.
Theory of Operation section 7.8, Wye-Delta Operation on page 160.

P65 Keypad Stop Disable I/O 18

LED Display

On

LCD Display

```
I/O:Keypad Stop
18 Enabled
```

Range

LED	LCD	Description
OFF	Disabled	Keypad Stop does not stop the starter
On	Enabled	Keypad Stop does stop the starter **(Default)**

Description

If "Disabled"
When this parameter is set to "Disabled", the keypad [STOP] button is de-activated. This should be done with caution, as the [STOP] key will not stop the starter.

The [STOP] key cannot be disabled if the keypad is selected as the control sources, .

If "Enabled"
When this parameter is set to "Enabled", the keypad [STOP] button is enabled and stops the starter regardless of the selected control source (P4 / QST 04 or P5 / QST 05) selected as (keypad, terminal or serial).

See Also

Local Source (P4 / QST 04) parameter on page 77.
Remote Source (P5 / QST 05) parameter on page 78.

P66 Auto Start Selection I/O 19

LED Display

0

LCD Display

```
I/O: Auto Start
19 Disabled
```

Range

LED	LCD	Description
0	Disabled	When Disabled, the Start input must always transition from low to high for a start to occur. **(Default)**
1	Power	When set to Power, a start will occur if the Start input is high while control power is applied.
2	Fault	When set to Fault, a start will occur if the Start input is high when a fault is reset.
3	Power, Fault	When set to Power and Fault, a start will occur if the Start input is high while control power is applied, and a start will occur if the Start input is high when a fault is reset.

Description

The Auto Start parameter determines whether or not a transition from low to high is required on the Start input for a start to occur after either a power up or a fault reset.

Jump to Parameter — FUN 00

By changing the value of this parameter and pressing [ENTER], you can jump directly to any parameter within that group.

P67 — Miscellaneous Commands — FUN 15

LED Display

0

LCD Display

```
FUN:Misc Command
15  None
```

Range

LED	LCD	Description
0	None	No commands **(Default)**
1	Std BIST	Built In Self Test with no line voltage applied to the starter
2	Powered BIST	Built In Self Test with line voltage applied to the starter
3	Reset RT	Reset Run Time Meter
4	Reset kWh	Reset kWh/MWh Meters
5	Reflash Mode	Activate Reflash Mode
6	Store Params	The current parameter values are stored in non-volatile memory
7	Load Params	All parameter are retrieved from non-volatile memory
8	Factory Rst	All parameters are restored to the factory defaults

Description

The Miscellaneous Commands parameter is used to issue various commands to the MX^2 starter.

The standard BIST command will put the starter into the unpowered BIST test. See section 8.6.1 on page 188.

The powered BIST command will put the starter into a powered BIST test. See section 8.6.2 on page 189.

The Reset Run Time command resets the user run time meters back to zero (0).

The Reset kWh command resets the accumulated kilowatt-hour and megawatt-hour meters back to zero (0).

The Reflash Mode command puts the MX^2 into a reflash program memory mode. The reflash mode can only be entered if the MX^2 starter is idle. When the reflash mode is entered, the MX^2 waits to be programmed. The onboard LED display shows “FLSH”. The remote display is disabled after entering reflash mode. The MX^2 does not operate normally until reflash mode is exited. Reflash mode may be exited by cycling control power.

The Store Parameters command allows the user to copy the parameters into non-volatile memory as a backup. If changes are being made, store the old set of parameters before any changes are made. If the new settings do not work, the old parameter values can be loaded back into memory.

The Load Parameters command loads the stored parameters into active memory.

The Factory Reset command restores all parameters to the factory defaults. These can be found in chapter 5.

P68 Communication Timeout FUN 12

LED Display

OFF

LCD Display

```
FUN:Com Timeout
12   Off
```

Range Off, 1 – 120 seconds **(Default Off)**

Description The Communication Timeout parameter sets the time that the starter continues to run without receiving a valid Modbus request. If a valid Modbus request is not received for the time that is set, the starter declares an F82 (Modbus Time Out). The starter performs a controlled stop.

See Also
Local Source (P4 / QST 04) parameter on page 77.
Remote Source (P5 / QST 05) parameter on page 78.
Stop Mode (P15 / CFN 14) parameter on page 87.
Controlled Fault Stop Enable (P43 / PFN 12) parameter on page 105.
Communication Address (P70 / FUN 10) parameter on page 121.
Communication Baud Rate (P69 / FUN 11) parameter on page 121.

P69 Communication Baud Rate FUN 11

LED Display

19.2

LCD Display

```
FUN:Com Baudrate
11    19200
```

Range 1200, 2400, 4800, 9600, 19200 bps **(Default 19200)**

Description The Communication Baud Rate parameter sets the baud rate for Modbus communications.

See Also
Local Source (P4 / QST 04) parameter on page 77 .
Remote Source (P5 / QST 05) parameter on page 78.
Communication Address (P70 / FUN 10) parameter on page 121.
Communication Timeout (P68 / FUN 12) parameter on page 121.
Communication Byte Framing (P71 / FUN 13) parameter on page 122.

P70 Communication Address FUN 10

LED Display

1

LCD Display

```
FUN: Com Drop #
10         1
```

Range 1 – 247 **(Default 1)**

Description The Communication Address parameter sets the starter's address for Modbus communications.

See Also
Local Source (P4 / QST 04) parameter on page 77.
Remote Source (P5 / QST 05) parameter on page 78.
Communication Baud Rate (P69 / FUN 11) parameter on page 121.
Communication Timeout (P68 / FUN 12) parameter on page 121.
Communication Byte Framing (P71 / FUN 13) parameter on page 122.

P71 Communication Byte Framing FUN 13

LED Display

0

LCD Display

FUN: Com Parity
13 Even, 1 Stop

Range

LED	LCD
0	Even, 1 Stop **(Default)**
1	Odd, 1 Stop
2	None, 1 Stop
3	None, 2 Stop

Description

The Communication Byte Framing parameter sets both the parity and number of stop bits.

See Also

Communication Timeout (P68 / FUN 12) parameter on page 121.
Communication Baud Rate (P69 / FUN 11) parameter on page 121.
Communication Address (P70 / FUN 10) parameter on page 121.

P72 Energy Saver FUN 09

LED Display

OFF

LCD Display

FUN:Energy Saver
09 Off

Range

On – Off **(Default Off)**

Description

The Energy Saver feature lowers the voltage applied to a lightly loaded motor. It continues to lower the voltage until it finds the point where the current reaches its lowest stable level and then regulates the voltage around this point. If the load on the motor increases, the starter immediately returns the output of the starter to full voltage.

⌘ **NOTE:** This function does not operate if a bypass contactor is used.

⌘ **NOTE:** In general, Energy Saver can save approximately 1000 watts per 100 HP. Consult Benshaw for further detail.

P73	Heater Level	FUN 08

LED Display

OFF

LCD Display

```
FUN:Heater Level
08   Off
```

Range

Off, 1 – 25% FLA **(Default Off)**

Description

The Heater Level parameter sets the level of D.C. current that reaches the motor when the motor winding heater/anti-windmilling brake is enabled. The motor winding heater/anti-windmilling brake can be used to heat a motor in order to prevent internal condensation or it can be used to prevent a motor from rotating.

⌘ **NOTE:** The motor can still slowly creep when the anti-windmilling brake is being used. If the motor has to be held without rotating, a mechanical means of holding the motor must be used.

The motor winding heater/anti-windmilling brake operation may be controlled by a digital input and by a heater disable bit in the starter control Modbus register. There are two methods using the digital inputs, either the input is an enable or disable.

Enabled: When the DI 1, DI 2 or DI 3 inputs are programmed as Heat Enable Inputs, the input may be used to control when heating/anti-windmilling is applied. The Heater / Anti-Windmill Level parameter must be set, the starter stopped and this input must be high for heating to occur.

Disabled: When the DI 1, DI 2 or DI 3 inputs are programmed as Heat Disable Inputs, the input may be used to control when heating/anti-windmilling is applied. The Heater / Anti-Windmill Level parameter must be set and this input must be low for heating to occur.

If no digital inputs are programmed as heater enabled or disabled, the heater is applied at all times when the motor is stopped.

The level of D.C. current applied to the motor during this operation needs to be monitored to ensure that the motor is not overheated. The current level should be set as low as possible and then slowly increased over a long period of time. While this is being done, the temperature of the motor should be monitored to ensure it is not overheating.

The Motor should be labeled as being live even when not rotating.

The heater feature should not be used to dry out a wet motor.

⌘ **NOTE:** When in single phase mode, the heater function is disabled.

⌘ **NOTE:** When this function is "on", all of the other parameters cannot be programmed until this parameter is turned "off".

See Also

Digital Input Configuration (P48-50 / I/O 01-03) parameters on page 110.

P74	Starter Type	FUN 07

LED Display

nor

LCD Display

```
FUN:Starter Type
07  Normal
```

Range

LED	LCD	Description
nor	Normal	Normal Reduced Voltage Soft Starter RVSS. **(Default)**
Id	Inside Delta	Inside Delta, RVSS.
Y-d	Wye-Delta	Wye Delta.
PctL	Phase Ctl	Open Loop Phase control using external analog input reference.
cFoL	Curr Follow	Closed Loop Current follower using external analog input reference.
AtL	ATL	Across the line. (Full Voltage)

Description

The MX^2 has been designed to be the controller for many control applications; Solid State Starter, both Normal (outside Delta) and Inside Delta, and Electro mechanical starters, Wye Delta, Across the line full voltage starter, Phase Control/Voltage Follower, Current Follower. In each case, the MX^2 is providing the motor protection and the necessary control for these applications.

⌘ **NOTE:** For single phase operation, select Normal for the Starter Type parameter, and Single Phase for the phase order parameter.

See Also

Phase Order (P77 / FUN 04) parameter on page 126.
Theory of Operation section 7.8, Wye-Delta Operation on page 160.
Theory of Operation section 7.11, Phase Control on page 165.
Theory of Operation section 7.12, Current Follower on page 167.

P75 Motor Rated Power Factor FUN 06

LED Display

-0.92

LCD Display

```
FUN:  Motor PF
06     -0.92
```

Range -0.01 – 1.00 **(Default –0.92)**

Description The Rated Power Factor parameter sets the motor power factor value that is used by the MX^2 starter for TruTorque and Power control calculations and metering calculations.

If TruTorque or Power acceleration and/or deceleration control is used, it is very important to properly set this parameter to the motor's full load rated power factor (usually available on the motor nameplate or from the motor manufacturer). For a typical induction motor, this value is between 0.80 and 0.95.

If the motor rated Power Factor is not available from either the motor nameplate or the motor manufacturer, the value can be obtained by viewing the power factor meter.

With the motor running at full name plate current, view the power factor meter either by setting the LED display's Meter parameter to "PF", or by pressing the [UP] arrow key until the Motor PF meter is displayed using the LCD display.

The meter value can be entered into the Rated Power Factor parameter.

See Also Meter (P79 / FUN 01) parameters on page 127.
Theory of Operation section 7.3.3, TruTorque Acceleration Control Settings and Times on page 141.
Theory of Operation section 7.3.4, Power Control Acceleration Settings and Times on page 143.

P76 Rated RMS Voltage FUN 05

LED Display

480

LCD Display

```
FUN:Rated Volts
05    480    Vlt
```

Range 100, 110, 120, 200, 208, 220, 230, 240, 350, 380, 400, 415, 440, 460, 480, 500, 525, 575, 600, 660, 690, 800, 1000, 1140 **(Default 480)**

Description The Rated Voltage parameter sets the line voltage that is used when the starter performs Over and Under line voltage calculations. This value is the supply voltage, NOT the motor utilization voltage.

See Also Meter (P79 / FUN 01) parameter on page 127.
Under Voltage Level (P39 / PFN 08) parameter on page 103.
Voltage Trip Time (P40 / PFN 09) parameter on page 104.

⌘**NOTE:** The rated RMS voltage must be set properly in order for the starter to operate properly.

P77 Input Phase Sensitivity FUN 04

LED Display

InS

LCD Display

```
FUN:Phase Order
04  Insensitive
```

Range

LED	LCD	Description
InS	Insensitive	Runs with any three phase sequence. **(Default)**
AbC	ABC	Only runs with ABC phase sequence.
CbA	CBA	Only runs with CBA phase sequence.
SPH	Single phase	Single Phase.

Description

The Input Phase Sensitivity parameter sets the phase sensitivity of the starter. This can be used to protect the motor from a possible change in the incoming phase sequence. If the incoming phase sequence does not match the set phase rotation, the starter displays an Alarm while stopped and faults if a start is attempted.

P78 CT Ratio FUN 03

LED Display

288

LCD Display

```
FUN:  CT Ratio
03  288:1
```

Range

72:1, 96:1, 144:1, 288:1, 864:1, 2640:1, 3900:1, 5760:1, 8000:1, 14400:1, 28800:1 **(Default 288:1)**

Description

The CT ratio must be set to match the CTs (current transformers) supplied with the starter. This allows the starter to properly calculate the current supplied to the motor.

Only Benshaw supplied CTs can be used on the starter. The CTs are custom 0.2 amp secondary CTs specifically designed for use on the MX^2 starter. The CT ratio is then normalized to a 1A secondary value. The supplied CT ratio can be confirmed by reading the part number on the CT label. The part number is of the form BICTxxx1M, where xxx is the CT primary and the 1 indicates the normalized 1 amp.

⌘ **NOTE:** It is very important that the CT ratio is set correctly. Otherwise, many starter functions will not operate correctly.

Refer to Table 3 - CT Ratios on page 13.

P79	Meter 1 ,Meter 2	FUN 01, 02

LED Display

0

LCD Display

```
FUN: Meter 1
01 Ave Current
```

```
FUN: Meter 2
02 Ave Volts
```

Range

LED	LCD	Description
0	Status	Running State. **(LED meter only, Default LED meter)**
1	Ave Current	Average current. **(Default LCD Meter 1)**
2	L1 Current	Current in phase 1.
3	L2 Current	Current in phase 2.
4	L3 Current	Current in phase 3.
5	Curr Imbal	Current Imbalance %.
6	Ground Fault	Residual Ground Fault % FLA.
7	Ave Volts	Average Voltage L-L RMS. **(Default LCD Meter 2)**
8	L1-L2 Volts	Voltage in, L1 to L2 RMS.
9	L2-L3 Volts	Voltage in, L2 to L3 RMS.
10	L3-L1 Volts	Voltage in, L3 to L1 RMS.
11	Overload	Thermal overload in %.
12	Power Factor	Motor power factor.
13	Watts	Motor real power consumed.
14	VA	Motor apparent power consumed.
15	vars	Motor reactive power consumed.
16	kW hours	Kilo-watt-hour used by the motor, wraps at 1,000.
17	MW hours	Mega-watt-hour used by the motor, wraps at 10,000.
18	Phase Order	Phase Rotation.
19	Line Freq	Line Frequency.
20	Analog In	Analog Input %.
21	Analog Out	Analog Output %.
22	Run Days	Running time in days, wraps at 2,730 days.
23	Run Hours	Running time in Hours and Minutes, wraps at 24:00.
24	Starts	Number of Starts, wraps at 65,536.
25	TruTorque %	TruTorque %.
26	Power %	Power %.
27	Pk accel Curr	Peak starting current.
28	Last Start T	Last starting duration.

Description

For the LED display, this parameter configures which single meter is displayed on the main screen. For the LCD display, parameters FUN 01 and FUN 02 configure which meters are displayed on the two lines of the main display screen.

P80	Software 1	FUN 14

LED Display

0

LCD Display

```
FUN:Software PN
14  810023-01-08
```

Description

The Software Part Number parameter displays the MX^2 software version, for hardware BIPC-300055-01-04. When calling Benshaw for service, this number should be recorded so it can be provided to the service technician.

In addition to viewing the software version with this parameter, the software version is also displayed on power up. On the LED display, the software version is flashed one character at a time on power up. On the LCD display, the software PN is fully displayed on power up.

⌘ NOTE: The seven segment LED in position one will flash the current software version currently in use when first powered on. The full software part number will flash consecutively (one digit per second),
For Example: 8...1...0...0...2...3...-...0...1...-...0...8

P81	Passcode	FUN 16

LED Display

OFF

LCD Display

```
FUN: Passcode
16  Off
```

Description

The MX^2 supports a 4-digit passcode. When the passcode is set, parameters may not be changed.

The MX^2 provides a means of locking parameter values so that they may not be changed. Once locked, the parameters values may be viewed on the display, but any attempt to change their values by pressing the [UP] or [DOWN] keys is ignored.

Viewing the Passcode parameter indicates whether or not the parameters are locked. If they are locked, the Passcode parameter displays “On”. If they are not locked, the Passcode parameter displays “Off”.

To lock the parameters, press the [ENTER] key while viewing the Passcode parameter. This allows entry of a 4-digit number. Press the [UP] or [DOWN] keys and [ENTER] for each of the four digits. After entering the fourth digit, the number is stored as the passcode and the parameters are locked.

Once parameters are locked, the same 4-digit number must be re-entered into the Passcode parameter in order to unlock them. Any other 4-digit number entered will be ignored.

When a passcode is set and an attempt is made to change a parameter through the display/keypad, the [UP] and [DOWN] keys simply have no effect. When a passcode is set and an attempt is made to change a parameter through Modbus, the MX^2 returns an error response with an exception code of 03 (Illegal Data Value) to indicate that the register can not be changed.

LED Display

The following steps must be performed to set a passcode using the LED Display:

1. At the default meter display, press the [PARAM] key to enter the parameter mode.
2. Press the [UP] or [DOWN] keys to get to the Passcode parameter (P81 / FUN 16).
3. Press the [ENTER] key. “Off” is displayed to indicate that no passcode is currently set.
4. Press the [UP] or [DOWN] keys and [ENTER] for each digit to be defined, select a value from 0000 to 9999 starting at the most significant digit.
5. Press the [ENTER] key to set the passcode.

The following steps must be performed to clear a passcode.

1. At the default meter display, press the [PARAM] key to enter the parameter mode.
2. Press the [UP] or [DOWN] keys to get to the Passcode parameter (P81 / FUN 16).
3. Press the [ENTER] key. “On” is displayed to indicate that a passcode is presently set.
4. Press the [UP] or [DOWN] keys and [ENTER] after each digit to select the previously set passcode value.
5. Press the [ENTER] key. The passcode is then cleared.

P82	Fault Log	FL1

LED Display

1F 28

LCD Display

```
FL1: Last Fault #
FaultName
```

Range FL1 – FL9

Description When a fault occurs, the fault number is logged in non-volatile memory. The most recent fault is in FL1 and the oldest fault is in FL9.

If the starter is equipped with an LCD display, pressing [ENTER] toggles through the Starter data recorded at the time of the fault. See section 4.13.3 on page 56 for more information.

See Also Fault Codes on page 196.

7 Theory of Operation

Motor Overload

7.1 Solid State Motor Overload Protection

7.1.1 Overview

The MX^2 contains an advanced I^2t electronic motor overload (OL) protection function. For optimal motor protection, the MX^2 has forty standard NEMA style overload curves (in steps of one) available for use. Separate overload classes can be programmed for acceleration and for normal running operation and individually or completely disabled if necessary. The MX^2 motor overload function also implements a NEMA based current imbalance overload compensation, adjustable hot and cold motor compensation, and adjustable exponential motor cooling.

CAUTION: If the MX^2 motor overload protection is disabled during any mode of operation, external motor overload protection must be provided to prevent motor damage and/or the risk of fire in the case of a motor overload.

7.1.2 Setting Up The MX^2 Motor Overload

Motor overload protection is easily configured through seven parameters (please refer to the descriptions of each parameter in section 6 of this manual for additional parameter information):

1. Motor FLA (QST 01)
2. Motor Service Factor (QST 02)
3. Motor Running Overload Class (PFN 15)
4. Motor Starting Overload Class (PFN 14)
5. Independent Starting/Running Overload (PFN 13)
6. Motor Overload Hot/Cold Ratio (PFN 16)
7. Motor Overload Cooling Time (PFN 17)

The Motor FLA and Service Factor parameter settings define the motor overload "pickup" point. For example, if the motor service factor is set to 1.00, the motor overload begins accumulating or incrementing when the measured motor current is >100% FLA (100% * 1.00). The overload will NOT trip if the motor current is <100%. If the motor service factor is set to 1.15, the overload starts accumulating content when the motor current >115% FLA (100% * 1.15). The overload will NOT trip if the measured motor current is <115% of rated FLA.

The available overload classes are based on the trip time when operating at 600% of rated motor current. For example, a Class 10 overload trips in 10 seconds when the motor is operating at 600% rated current; a Class 20 overload trips in 20 seconds when the motor is operating at 600% rated current.

The equation for the MX^2 standard overload curves after the "pick-up" point has been reached is:

$$\text{Time to Trip (seconds)} = \frac{35\,\text{seconds} * \text{Class}}{\left(\dfrac{\text{Measured Current} * \dfrac{1}{\text{Current Imbal Derate Factor}}}{\text{Motor FLA}}\right)^2 - 1}$$

Figure 25: Commonly Used Overload Curves

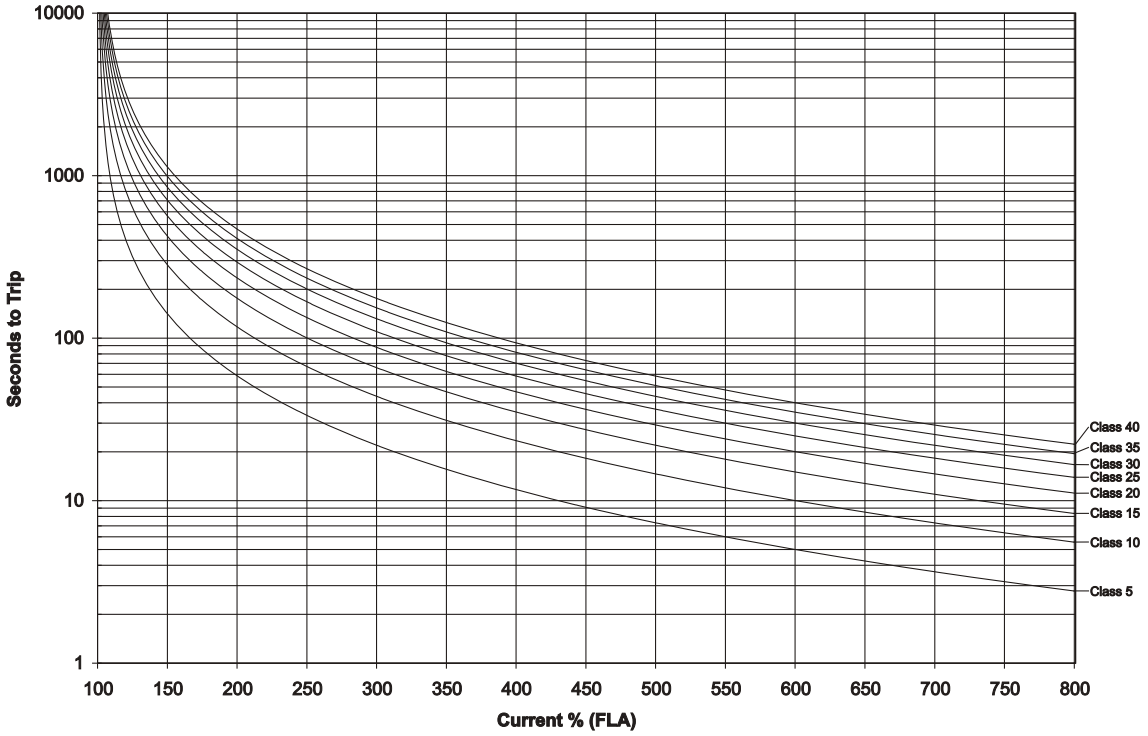

⌘ **NOTE:** In some cases the power stack rating may determine what motor overload settings are available. Each power stack is designed to support specific motor overload classes. The RB2 power stack is designed for class 10 duty without derating. Refer to the RB2 for the specific RB2 overload capabilities. Also, in certain heavy duty DC braking applications, the overload settings may be limited to protect the motor from potential damage during braking.

Visit the web at www.benshaw.com for an automated overload calculator.

7.1.3 Motor Overload Operation

Overload Heating

When the motor is operating in the overloaded condition (motor current greater than FLAxSF), the motor overload content accumulates based on the starter's operating mode at a rate established by the overload protection class chosen. The accumulated overload content can be viewed on the display or over the communications network.

Overload Alarm

An overload alarm condition is declared when the accumulated motor overload content reaches 90%. An output relay can be programmed to change state when a motor overload alarm condition is present to warn of an impending motor overload fault.

Overload Trip

The MX^2 starter trips when the motor overload content reaches 100%, protecting the motor from damage. The starter first performs the defined deceleration or DC braking profile before stopping the motor if the controlled fault stop feature of the MX^2 is enabled. The motor overload trip time accuracy is ± 0.2 seconds or ± 3% of total trip time.

Overload Start Lockout

After tripping on an overload, restarting is prevented and the starter is "locked out" until the accumulated motor overload content has cooled below 15%.

7.1.4 Current Imbalance / Negative Sequence Current Compensation

The MX^2 motor overload calculations automatically compensate for the additional motor heating which results from the presence of unbalanced phase currents. There can be significant negative sequence currents present in the motor when a current imbalance is present. These negative sequence currents have a rotation opposite the motor rotation and are typically at two times the line frequency. Due to the negative sequence currents opposite rotation and higher frequency, these currents can cause a significant increase in rotor heating.

The overload curves provided by a motor manufacturer are based on balanced motor operation. Therefore, if a current imbalance is present, the MX^2 motor overload compensates for the additional heating effect by accumulating overload content faster and tripping sooner to protect the motor. The current imbalance compensation also adjusts the Hot / Cold motor protection as described below in section 7.1.6 . The MX^2 derating factor is based on NEMA MG-1 14.35 specifications and is shown in Figure 26.

Figure 26: Overload Derating for Current Imbalance

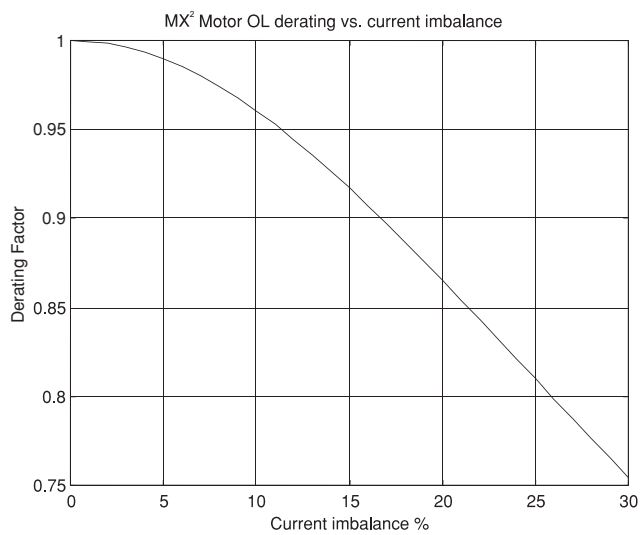

7.1.5 Harmonic Compensation

The MX^2 motor overload calculation automatically compensates for the additional motor heating that can result from the presence of harmonics. Harmonics can be generated by other loads connected to the supply such as DC drives, AC variable frequency drives, arc lighting, uninterruptible power supplies, and other similar loads.

7.1.6 Hot / Cold Motor Overload Compensation

If a motor has been in operation for some time, it will have heated up to some point. Therefore, there is typically less overload content available in the case where a motor is restarted immediately after it has been running when compared to the situation where a motor has been allowed to cool down before restarting. The MX^2 provides adjustable hot motor overload compensation to fully protect the motor in these cases.

If the hot and cold maximum locked rotor times are provided, the MX^2 Hot/Cold Ratio parameter value can be calculated as follows:

If no motor information is available, a Hot/Cold ratio value of 60% is usually a good starting point.

$$\text{OL H/C Ratio} = \left(1 - \frac{\text{Max Hot Locked Rotor Time}}{\text{Max Cold Locked Rotor Time}}\right) \text{x}\,100\%$$

The MX^2 adjusts the actual motor overload content based on the programmed Hot/Cold Ratio set point and the present running current of the motor so that the accumulated motor overload content accurately tracks the thermal condition of the motor. If the motor current is constant, the overload content eventually reaches a steady state value. This value is derived as follows:

$$OL_{ss} = \text{OL H/C Ratio} \times \frac{\text{Current}}{\text{FLA}} \times \frac{1}{\text{Current Imbalance Derate Factor}}$$

The running OL content is also adjusted based on the derating factor due to the presence of any current imbalances and or harmonics.

If the existing motor overload content is less than the calculated running OL content, the motor overload exponentially increases the overload content until the appropriate running overload content level is achieved. If the existing motor overload content is greater than the calculated running OL content level, the overload exponentially cools down or decreases to the appropriate running overload content level. The rate of the running motor overload heating or cooling is controlled by the Motor Overload Cooling Time parameter.

The following diagram illustrates how the current and the Motor Overload Hot/Cold Ratio parameter determines the steady state overload content. It assumes there is no current imbalance.

Figure 27: Motor Overload H© Ratio Example

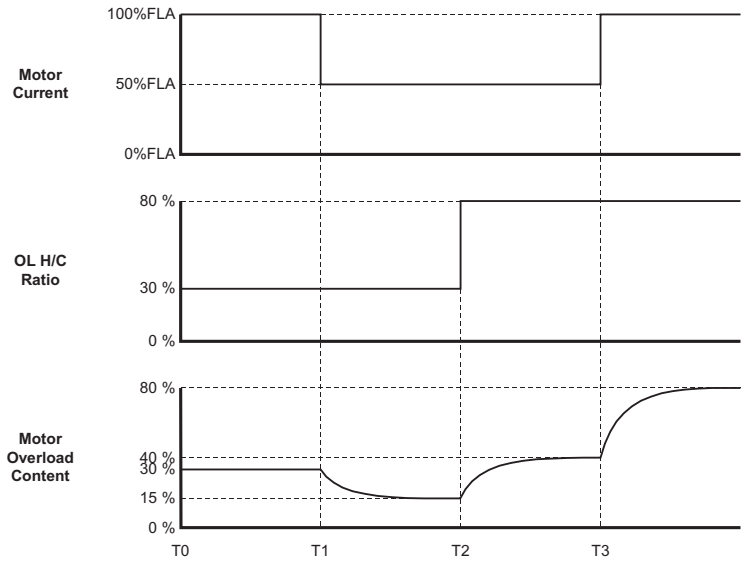

At time T0, the motor current is 100%FLA and the OL H© Ratio is set at 30%. It is assumed that the motor has been running for some time and the motor overload content has reached a steady state value of 30% (30% H© Ratio x 100% FLA = 30%).

At time T1, the motor current drops to 50%FLA. The motor overload content exponentially cools to a new steady state value of 15% (30% H© Ratio x 50% FLA = 15%).

At time T2, the OL H© Ratio is set to 80%. The motor overload content exponentially rises to a new steady state value of 40% (80% H© Ratio x 50% FLA = 40%).

At time T3 the motor current rises back up to 100%FLA. The motor overload content exponentially rises to a new steady state value of 80% (80% H© Ratio x 100% FLA= 80%).

7.1.7 Separate Starting and Running Motor Overload Settings

If desired, separate overload classes can be programmed for use during starting and during running. The motor overload protection may also be disabled during starting or during normal running. In order to enable separate overload settings the Independent Starting/Running Overload parameter needs to be set to "On" to allow independent overload operation. Once set to "On", the individual Motor Starting Overload Class and Motor Running Overload Class parameters can be set to either "Off" or the desired overload class settings.

The Motor Starting Overload Class parameter value is used for the motor overload calculations when the starter is starting the motor (kick mode, acceleration, and running before up-to-speed has been declared). Once the motor has reached full speed and during deceleration or braking, the Motor Running Overload Class is used for the motor overload calculations. As the motor protection curves shift from the acceleration curve to the running curve, the accumulated overload content is retained to provide a seamless transition from one mode of operation to the other.

Disabling the Starting OL function or using a higher OL class for the Starting OL can be useful on extremely high inertial loads such as large centrifuges or high friction loads that require very long starting periods.

⌘ **NOTE**: When the Independent Starting/Running Overload (P44 / PFN 13) parameter is set to "OFF", the running OL is used at all times.

⌘ **NOTE:** The Hot/Cold motor compensation is still active when either the starting or running overload is disabled. Therefore the motor overload content may still slowly increase or decrease depending on the measured motor current. However if the motor overload is disabled, the motor overload content is limited to a maximum of 99%. Therefore, a motor overload trip can not occur.

CAUTION: When both overloads are disabled, the accumulated overload content is set to zero (0%) and the starter does not provide any motor overload protection. External motor overload protection must be provided to prevent motor damage and/or the risk of fire in the case of a motor overload.

7.1.8 Motor Cooling While Stopped

The Motor Overload Cooling Time parameter is used to adjust the cooling rate of the motor overload. When the motor is stopped and cooling, the accumulated motor overload content is reduced in an exponential manner.

$$\text{OL Content} = \text{OL Content when Stopped} * e^{\frac{5}{CoolingTime}t}$$

When the motor is stopped, the motor overload cools as shown in the following Figure 28.

Figure 28: Motor Cooling While Stopped Curves

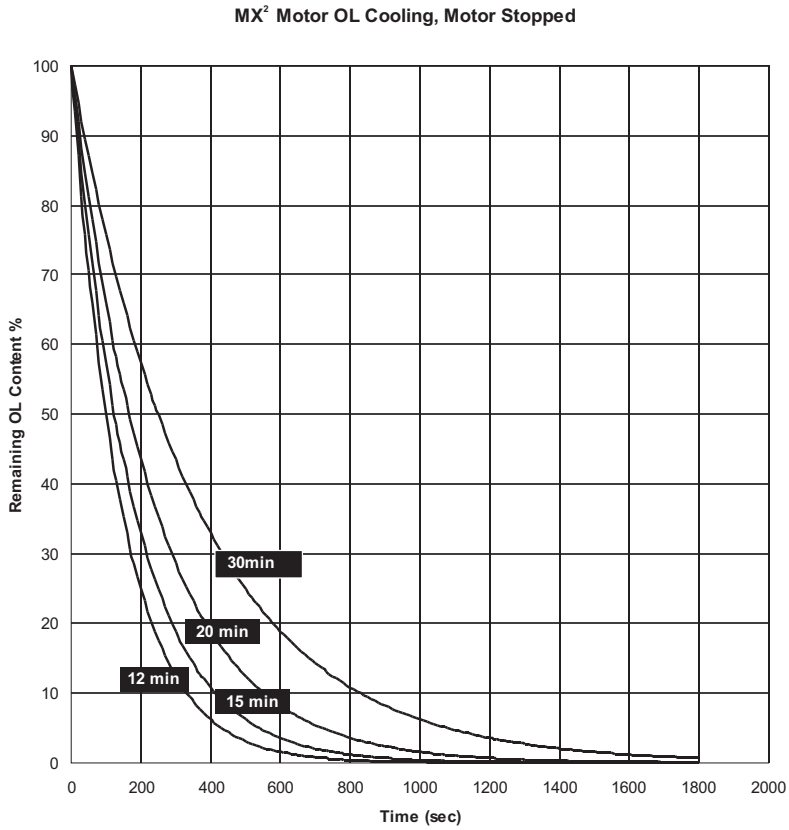

If the motor manufacturer does not specify the motor cooling time, the following approximations for standard TEFC cast iron motors based on frame size can be used:

Frame Size	Cooling Time
180	30 min
280	60 min
360	90 min
400/440	120 min
500	180 min
Larger frames	Consult Manufacturer

For motors less than 300hp, another approximation based on allowable motor starts per hour can also be used to set an initial value of the Motor Overload Cooling Time parameter:

$$\text{Motor Cooling Time (minutes)} \approx \frac{60 \text{ minutes}}{\text{Starts per hour}}$$

The Motor Overload Cooling Time parameter is defined as the time that it takes for the motor to cool from 100% overload content to less than 1% overload content. Sometimes a motor manufacturer may provide a cooling time constant (t or tau) value. In these cases, the Motor Overload Cooling Time parameter should be set to five (5) times the specified time constant value.

7.1.9 Motor Cooling While Running

When the motor is running, the Motor Overload Cooling Time parameter and the Motor Overload Hot/Cold Ratio parameter settings control the motor OL content. If the motor overload content is above the steady state OL running level (See section 7.1.6, Hot / Cold Motor Overload Compensation for more details) the motor OL exponentially cools to the appropriate steady state OL level. When the motor is running, the cooling time is adjusted based on the measured current level and current imbalance level at which the motor is operating.

$$\text{Cooling Time Running} = \text{Cooling Time Stopped} * \frac{\text{Measured Running Current}}{\text{Motor FLA}} * \frac{1}{\text{Current Imbalance Derate Factor}}$$

In all cases, the running motor cooling time is shorter (motor will cool faster) than when the motor is stopped. The faster cooling results because it is assumed that when a motor is running, cooling air is being applied to the motor.

7.1.10 Emergency Motor Overload Reset

The MX^2 has an emergency motor overload reset feature that allows the user to override the overload starter lockout. This resets the motor overload content to 0%. It does not reset the overload fault.

To perform an emergency overload reset, simultaneously press the [RESET] and [DOWN] buttons on the keypad. An emergency overload reset may also be performed by applying 120 Volts to a digital input that is configured as an emergency overload reset input or by setting the emergency overload reset bit in the starter control Modbus register.

CAUTION: This feature should only be used in an emergency. Before an emergency reset is performed the cause of the motor overload should be investigated to ensure that the motor is capable of restarting without causing undesired motor or load damage. When the emergency motor overload reset is used, the accumulated motor overload content is reset back to zero (0%). Therefore, the MX^2's motor protection functions may not be able to fully protect the motor from damage during a restart after performing an emergency motor overload reset.

Motor Service Factor

7.2 Motor Service Factor

General

The Motor Service Factor parameter should be set to the service factor of the motor. The service factor is used to determine the "pick up" point for the overload calculations. If the service factor of the motor is not known then the service factor should be set to 1.00.

⌘ **NOTE:** The NEC (National Electrical Code) does not allow the service factor to be set above 1.40. Check with other local electrical codes for their requirements.

The National Electrical Code, article 430 Part C, allows for different overload multiplier factors depending on the motor and operating conditions. NEC section 430-32 outlines the allowable service factor for different motors as follows:

Motor Overload Multiplier

Service factor 1.15 or more	1.25
Motor temp. rise 40°C or less	1.25
All others	1.15

NEC section 430-34 permits further modifications if the service factor is not sufficient to start the motor:

Motor Overload Multiplier

Service factor 1.15 or more	1.40
Motor temp. rise 40°C or less	1.40
All others	1.30

Although the NEC does not address the effect of the ambient temperature of the motor location, guidance can be derived by examining NEC limits. If the motor is operating in an ambient temperature that is less than 40°C, then the overload multiplier can be increased while still protecting the motor from exceeding its maximum designed temperature. The following curve gives the ambient temperature versus the correction factor.

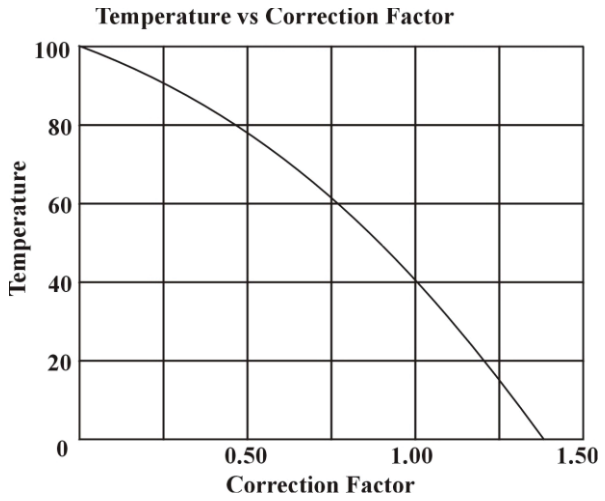

Example: If a motor operates at 0°C, then a 1.36 correction factor could be applied to the overload multiplier. This could give a theoretical overload multiplier of 1.36 x 1.25 or 1.70. The highest legal NEC approved value of overload multiplier is 1.40, so this could be used.

Acceleration Control

7.3 Acceleration Control

7.3.1 Current Ramp Settings, Ramps and Times

General

The current ramp sets how the motor accelerates. The current ramp is a linear increase in current from the initial setting to the maximum setting. The ramp time sets the speed of this linear current increase. The following figure shows the relationships of these different ramp settings.

Figure 29: Current Ramp

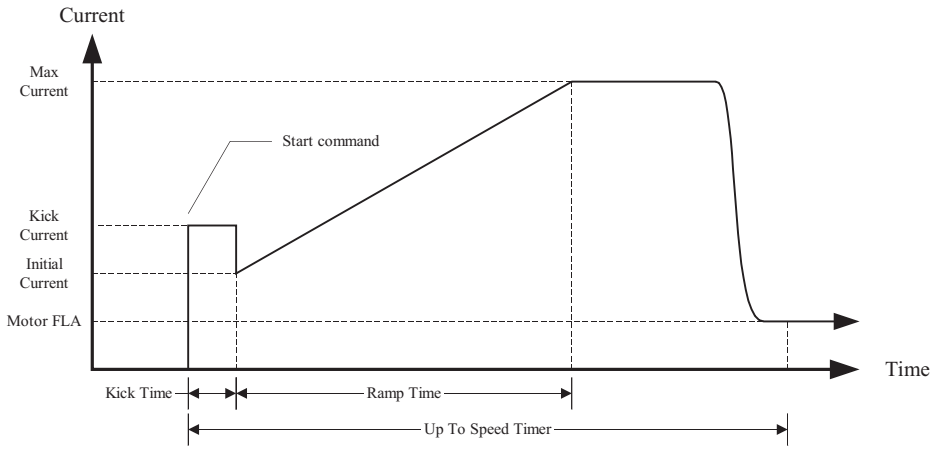

Initial Current

The initial current should be set to the level that allows the motor to begin rotating within a couple of seconds of receiving a start command.

To adjust the initial current setting, give the starter a run command. Observe the motor to see how long it takes before it begins rotating and then stop the unit. For every second that the motor doesn't rotate, increase the initial current by 20%. Typical loads require an initial current in the range of 50% to 175%.

Maximum Current

For most applications, the maximum current can be left at 600%. This ensures that enough current is applied to the motor to accelerate it to full speed.

The maximum current can also be set to a lower current limit. This is usually done to limit the voltage drop on the power system or to limit the torque the motor produces to help prevent damage to the driven load.

⌘ **NOTE:** The motor may achieve full speed at any time during the current ramp. This means that the maximum current setting may not be reached. Therefore, the maximum current setting is the most current that could ever reach the motor, and not necessarily the maximum current that reaches the motor.

⌘ **NOTE:** When setting a current limit, the motor must be monitored to ensure that the current is high enough to allow the motor to reach full speed under worst case load conditions.

Ramp Time

The ramp time is the time it takes for the current to go from the initial current to the maximum current. To make the motor accelerate faster, decrease the ramp time. To make the motor accelerate slower, increase the ramp time.

If the ramp time expires before the motor reaches full speed, the starter maintains the maximum current level until either the motor reaches full speed, the Up to Speed time expires, or the motor thermal overload trips.

⌘ **NOTE:** Setting the ramp time to a specific value does not necessarily mean that the motor will take this time to accelerate to full speed. The motor and load may achieve full speed before the ramp time expires if the application does not require the set ramp time and maximum current to reach full speed. Alternatively, the motor and load may take longer than the set ramp time to achieve full speed.

7.3.2 Programming A Kick Current

General

The kick current sets a constant current level that is applied to the motor before the ramp begins. The kick current is only useful on motor loads that are hard to get rotating but then are much easier to move once they are rotating. An example of a load that is hard to get rotating is a ball mill. The ball mill requires a high torque to get it to rotate the first quarter turn (90°). Once the ball mill is past 90° of rotation, the material inside begins tumbling and it is easier to turn.

Kick Level

The kick current parameter is usually set to a low value and then the kick time is adjusted to get the motor rotating. If the kick time is set to more than 2.0 seconds without the motor rotating, increase the kick current by 100% and re-adjust the kick time.

Kick Time

The kick time adjustment should begin at 0.5 seconds and be adjusted by 0.1 or 0.2 second intervals until the motor begins rotating. If the kick time is adjusted above 2.0 seconds without the motor rotating, start over with a higher kick current setting.

7.3.3 TruTorque Acceleration Control Settings and Times

General

TruTorque acceleration control is a closed loop torque based control. The primary purpose of TruTorque acceleration control is to smoothly start motors and to reduce the torque surge that can occur as an AC induction motor comes up to speed. This torque surge can be a problem in applications such as pumps and belt driven systems. In pumping applications, this torque surge can result in a pressure peak as the motor comes up to speed. In most situations this small pressure peak is not a problem. However in selected cases, even a small pressure rise can be highly undesirable. In belt driven applications, TruTorque can prevent the slipping of belts as the motor reaches full speed.

Figure 30: TruTorque Ramp

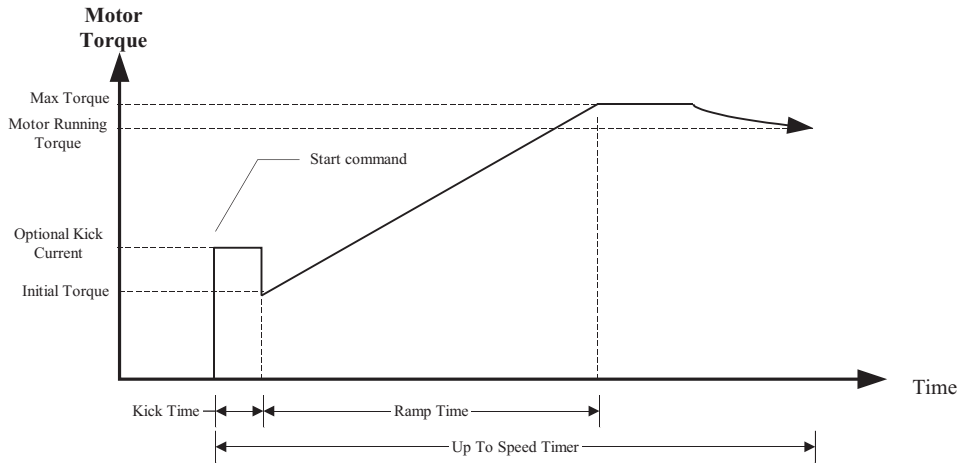

TruTorque acceleration control can be very useful for a variety of applications. However it is best used to start centrifugal pumps, fans, and other variable torque applications. TruTorque generally should not be used in applications where the starting load varies greatly during the start such as with a reciprocating compressor, where the starting load is very low, or where the starting load varies greatly from one start to another. TruTorque control is not recommended for the starting of AC synchronous motors.

Initial Torque

This parameter sets the initial torque level that the motor produces at the beginning of the starting ramp profile. A typical value is 10% to 20%. If the motor starts too quickly or the initial motor torque is too high, reduce this parameter. If the motor does not start rotating within a few seconds after a start is commanded, increase this parameter. If the value is set too low a "No Current at Run" fault may occur.

Maximum Torque

This parameter sets the final or maximum torque level that the motor produces at the end of the acceleration ramp time. For a loaded motor, the maximum torque value initially should be set to 100% or greater. If the maximum torque value is set too low, the motor may not produce enough torque to reach full speed and may stall. On lightly loaded motors, this parameter may be reduced below 100% to produce smoother starts.

If the motor can be started by using the default TruTorque acceleration parameter values or another ramp profile, the Maximum Torque level can be determined more precisely so that the motor comes up to speed in approximately the preset ramp time. In this case, while the motor is running fully loaded, display the TruTorque percent (TT%) meter on the display. Record the value displayed. The Maximum Torque level should then be set to the recorded full load value of TT% plus an additional 10%. Restart the motor with this value to verify correct operation.

⌘ **NOTE:** When setting the Maximum Torque value, the motor must be monitored to ensure that the torque level is high enough to allow the motor to reach full speed under worst-case load conditions.

⌘ **NOTE:** Depending on loading, the motor many achieve full speed at any time during the TruTorque ramp. This means that the Maximum Torque level many never be achieved. Therefore, the maximum torque level is the maximum TruTorque level that is permitted. However the motor torque may not necessarily reach this value during all starts.

Ramp Time

When in TruTorque acceleration mode, the ramp time setting is the time it takes for the torque to go from the initial torque setting to the maximum torque setting. To make the motor accelerate faster, decrease the ramp time. To make the motor accelerate slower, increase the ramp time.

If the ramp time expires before the motor reaches full speed, the starter maintains the Maximum Torque level until either the motor reaches full speed, UTS timer expires, or the motor thermal overload protection trips.

⌘ **NOTE:** Setting the ramp time to a specific value does not necessarily mean that the motor takes that exact amount of time to accelerate to full speed. The motor and load may achieve full speed before the ramp time expires if the load does not require the set ramp time or set torque level to reach full speed. Alternately, the motor and load may take longer than the set ramp time to achieve full speed depending on the parameter settings and load level.

7.3.4 Power Control Acceleration Settings and Times

General

Power control is a closed loop power based acceleration control. The primary purpose of Power controlled acceleration is to control and limit the power (kW) drawn from the power system and to reduce the power surge that may occur as an AC induction motor comes up to speed. This power surge can be a problem in applications that are operated on generators or other limited or "soft" power systems. Power control also reduces the torque surge that can also occur as an AC induction motor comes up to speed.

Figure 31: Power Ramp

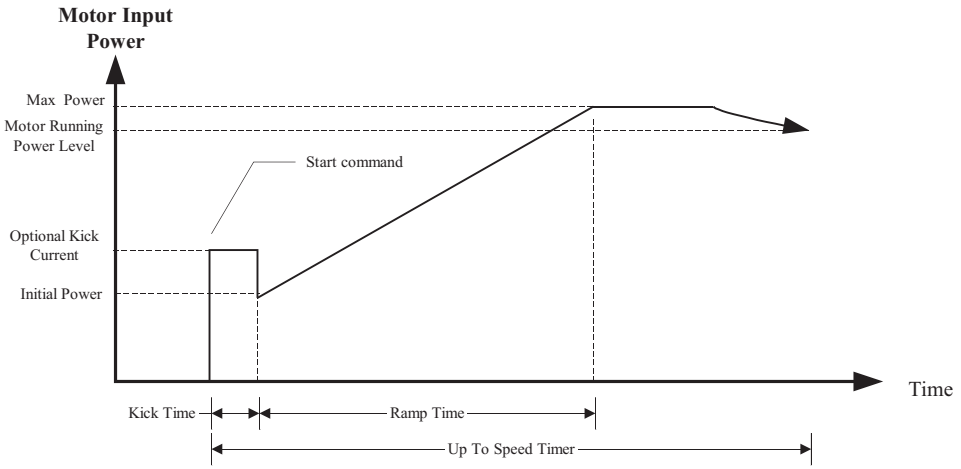

Power control acceleration can be very useful for a variety of applications. Power control generally should not be used in applications where the starting load varies greatly during the start such as with a reciprocating compressor. Power control is not recommended for starting of AC synchronous motors.

Initial Power

This parameter sets the initial power level that the motor draws at the beginning of the starting ramp profile. A typical value is usually 10% to 30%. If the motor starts too quickly or the initial power level is too high, reduce this parameter. If the motor does not start rotating within a few seconds after a start is commanded, increase this parameter. If this value is set too low a "No Current at Run" fault may occur.

Maximum Power

This parameter sets the final or maximum power level that the motor produces at the end of the acceleration ramp. For a loaded motor, the maximum power level initially should be set to 100% or greater. If the maximum power level value is set too low, the motor may not produce enough torque to reach full speed and may stall. On lightly loaded motors, this parameter may be reduced below 100% to produce smoother starts.

If the motor can be started by using the default Power acceleration parameter values or the Current control ramp, the Maximum Power level can be determined more precisely so that the motor comes up to speed in approximately the preset ramp time. In this case, while the motor is running fully loaded, display the Power percent (KW%) meter on the display. Record the value displayed. The Maximum Power level should then be set to the recorded full load value of KW% plus an additional 5% to 10%. Restart the motor with this value to verify correct operation.

⌘ **NOTE:** When setting the Maximum Power level, the motor must be monitored to ensure that the starting power is high enough to allow the motor to reach full speed under worst case load conditions.

⌘ **NOTE**: Depending on loading, the motor may achieve full speed at any time during the Power ramp. This means that the Maximum Power level may not be reached. Therefore, the maximum power level is the maximum power level that is permitted. However, the motor power may not necessarily reach this value during all starts.

Ramp Time

When in Power acceleration mode, the ramp time setting is the time it takes for the power to go from the initial power setting to the maximum power setting. To make the motor accelerate faster, decrease the ramp time. To make the motor accelerate slower, increase the ramp time.

If the ramp time expires before the motor reaches full speed, the starter maintains the Maximum Power level until either the motor reaches full speed, the UTS timer expires, or the motor thermal overload protection trips.

⌘ **NOTE:** Setting the ramp time to a specific value does not necessarily mean that the motor takes that exact amount of time to accelerate to full speed. The motor and load may achieve full speed before the ramp time expires if the load does not require the set ramp time or set power level to reach full speed. Alternately, the motor and load may take longer than the set ramp time to achieve full speed depending on the parameter settings and load level.

7.3.5 Open Loop Voltage Ramps and Times

General

The open loop voltage ramp provides soft starting of a motor by increasing the voltage applied to motor from the Initial Voltage setting to full (100%) line voltage. The ramp time sets the speed at which the voltage is increased. Because this is an open loop control profile, the motor current during starting tends to be reduced; however, the current is not limited to any particular level. This starting mode (old), is not commonly used except in special circumstances. In most applications, the use of one of the other closed loop starting profiles is recommended.

Figure 32: Voltage Ramp

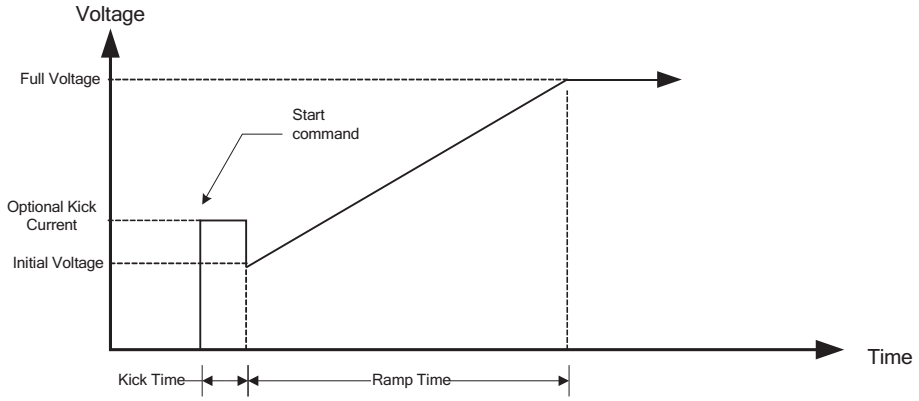

Initial Voltage

This parameter sets the initial voltage level that is applied to the motor. To adjust the starting voltage level, give the starter a run command and observe the motor operation. If the motor starts too quickly reduce the initial voltage level. If the motor does not start rotating immediately or starts too slowly then increase the initial voltage level until the motor just starts to rotate when a start command is given. If the initial voltage level is set too low, a Fault 39 - No Current at Run may occur. In this case increase the initial voltage level to permit more current to initially flow to the motor.

Ramp Time

The ramp time setting is the time that it takes for the applied voltage to go from the initial voltage level to the full voltage (100%) level. To make the motor accelerate faster, decrease the ramp time. To make the motor accelerate slower, increase the ramp time.

UTS Timer

When the start mode is set to open-loop voltage ramp acceleration, the UTS Timer acts as an acceleration kick. When the UTS timer expires, full voltage is applied to the motor. This feature can be used to reduce motor surging that may occur near the end of an open loop voltage ramp start. If a surge occurs near the end of the ramp, set the UTS timer to expire at this time and restart the motor. If the surge still occurs, set the UTS time to a lower time until the surging subsides. If motor surging continues to be a problem, it is recommended that one of the other standard MX^2 closed-loop starting profiles be used.

Figure 33: Effect of UTS Timer on Voltage Ramp

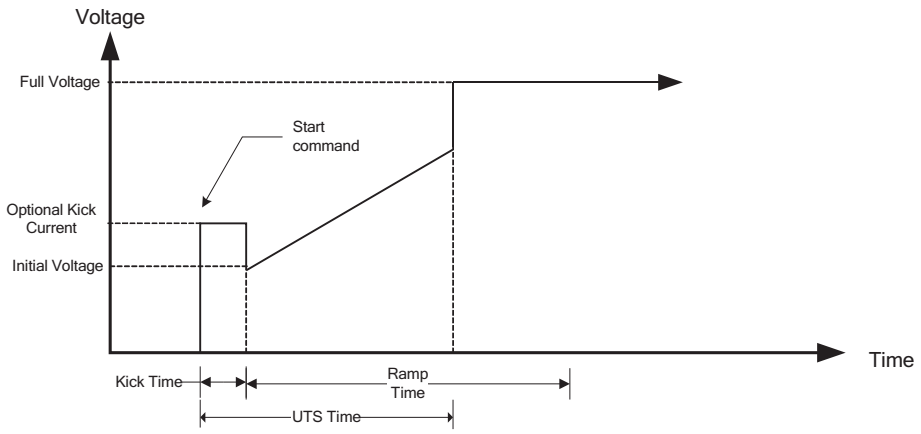

7.3.6 Dual Acceleration Ramp Control

General

Two independent current ramps and kick currents may be programmed. The use of two different starting profiles can be very useful with applications that have varying starting loads such as conveyors that can start either loaded or unloaded.

The Current Ramp 1 profile is programmed using the parameters Initial Current 1, Maximum Current 1, and Ramp Time 1. The Current Ramp 2 is programmed using the parameters Initial Current 2, Maximum Current 2, and Ramp Time 2. Kick Current 1 profile is programmed using the parameters Kick Level 1 and Kick Time 1. Kick Current 2 profile is programmed using the parameters Kick Level 2 and Kick Time 2.

Acceleration Ramp Selection

Current Ramp 2 and Kick Current 2 starting profiles are selected by programming a digital input to the Ramp Select function and then energizing that input by applying 120 Volts to it. When a digital input is programmed to Ramp Select, but de-energized, Current Ramp 1 and Kick Current 1 are selected. When no digital inputs are programmed to the Ramp Select function the Ramp 1 profile is used.

The Ramp Select input only affects the starting profile when using a current ramp profile and during a kick. The Ramp Select input does not affect the TruTorque ramp, Power ramp, or the Voltage ramp profile (unless kicking is enabled at the beginning of those ramps).

The following table summarizes which parameters affect the starting profile when a digital input is programmed to the Ramp Select function and that input is either energized or de-energized.

Ramp Modes

	Ramp Select De-energized	**Ramp Select Energized**
Current Ramp	Initial Current 1	Initial Current 2
	Maximum Current 1	Maximum Current 2
	Ramp Time 1	Ramp Time 2
	Kick Level 1	Kick Level 2
	Kick Time 1	Kick Time 2
TruTorque Ramp	Initial Voltage/Torque/Power	
	Maximum Torque/Power	
	Ramp Time 1	
	Kick Level 1	Kick Level 2
	Kick Time 1	Kick Time 2
Power (KW) Ramp	Initial Voltage/Torque/Power	
	Maximum Torque/Power	
	Ramp Time 1	
	Kick Level 1	Kick Level 2
	Kick Time 1	Kick Time 2
Voltage Ramp	Initial Voltage/Torque/Power	
	Ramp Time 1	
	Kick Level 1	Kick Level 2
	Kick Time 1	Kick Time 2

Changing Ramp Profiles

The selected ramp profile may be changed during starting by changing the Ramp Select input. When the Ramp Select input changes during ramping, control switches to the other profile as if it were already in progress. It does not switch to the beginning of the other profile. Refer to the following example below:

⌘ **NOTE:** Once the motor has achieved an up-to-speed status (UTS), changes to the Ramp Select input have no effect on the motor operation.

Figure 34: Changing Ramps During Acceleration Example

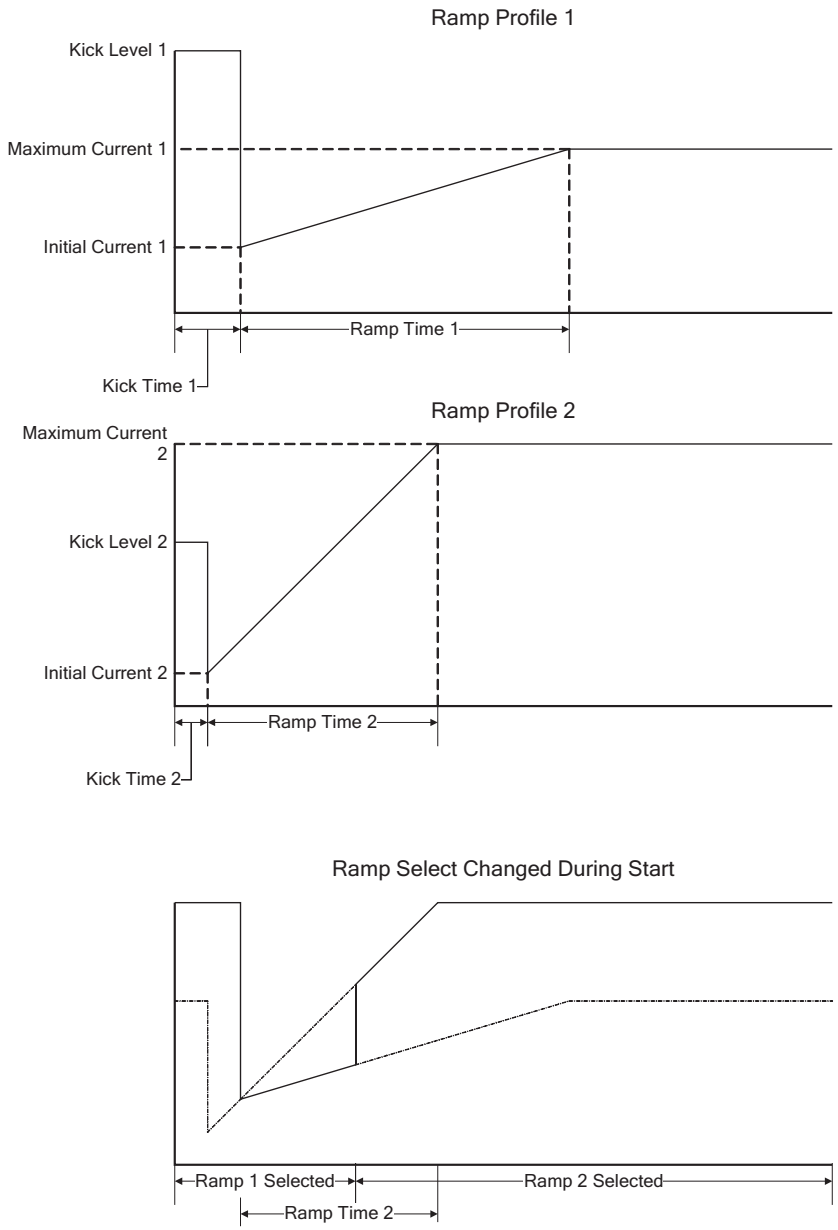

Deceleration Control

7.4 Deceleration Control

7.4.1 Voltage Control Deceleration

Overview

The deceleration control on the MX^2 uses an open loop voltage ramp. The MX^2 ramps the voltage down to decelerate the motor. The curve shows the motor voltage versus the decel setting.

Figure 35: Motor Voltage Versus Decel Level

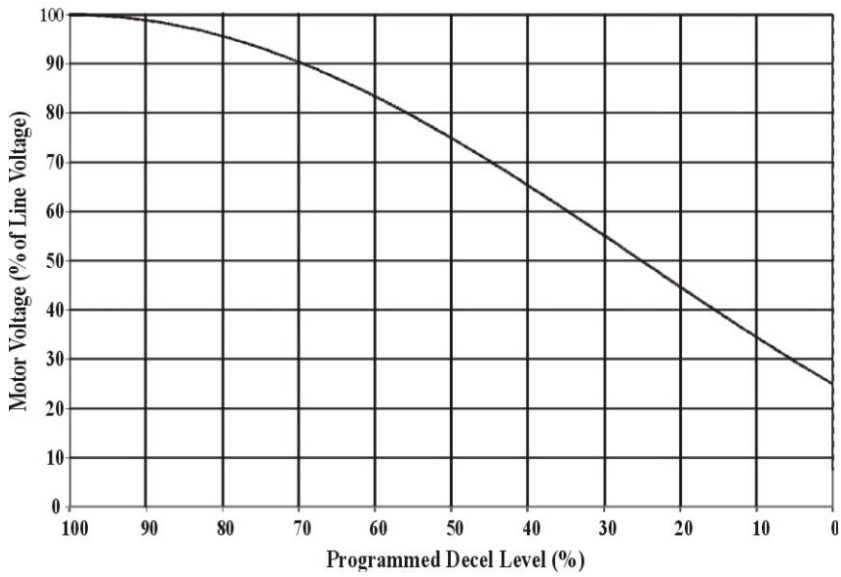

Beginning Level

This sets the starting voltage of the deceleration ramp. Most motors require the voltage to drop to around 60% or lower before any significant deceleration is observed. Therefore, a good first setting for this parameter is 35%.

To adjust this parameter, it is necessary to observe the motor operation as soon as a stop is commanded. If the motor hunts (speed oscillations) at the beginning of the deceleration, then lower the parameter by 5%. If the motor has a big drop in speed as soon as a stop is commanded, then raise the parameter by 5%.

Some motors are very sensitive to the adjustment of this parameter. If a 5% adjustment changes the motor from hunting to dropping in speed, then a smaller change of 1% or 2% may be necessary.

Ending Level

This sets the final voltage for the deceleration ramp. In most cases, this parameter can be set to 10% and the decel time can be used to adjust the deceleration rate. If the motor is coming to a stop too quickly or if the starter continues to apply current to the motor after the motor has stopped, this parameter can be increased in 5% increments to fix this.

Decel Time

The decel time sets how quickly the motor decelerates. Usually a time of 30 seconds is a good starting point. To make the motor take longer to decelerate, increase this parameter or to make the motor decelerate quicker, decrease this parameter.

⌘ **NOTE:** Deceleration control provides a smoother stop. However, the motor will take longer to stop than if it was just allowed to coast to stop.

7.4.2 TruTorque Deceleration

Overview

TruTorque deceleration control is a closed loop deceleration control. This allows TruTorque deceleration to be more consistent in cases of changing line voltage levels and varying motor load conditions. TruTorque deceleration is best suited to pumping and compressor applications where pressure surges, such as water hammer, must be eliminated. The MX^2 linearly reduces the motor's torque to smoothly decelerate the motor and load. TruTorque deceleration is very easy to use with only two parameters to set.

Figure 36: TruTorque Deceleration

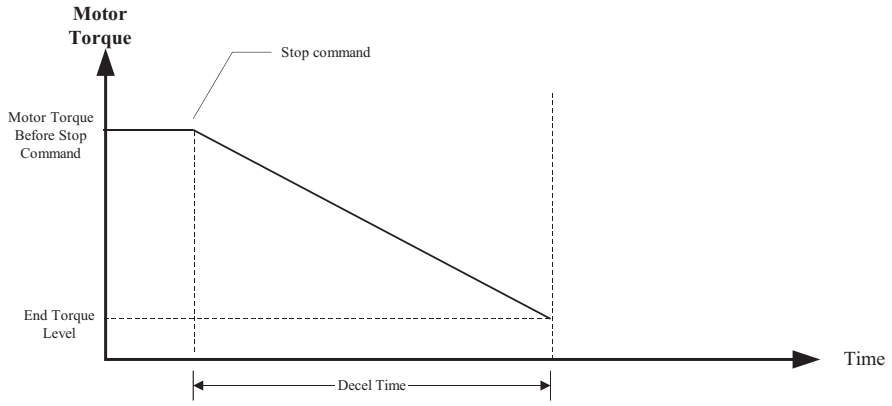

Ending Level

The Decel End Level parameter sets the ending torque level for the TruTorque deceleration ramp profile.

A typical TruTorque decel end level setting is between 10% and 20%. If the motor stops rotating before the deceleration time has expired, increase this parameter value. If the motor is still rotating when the deceleration time has expired, decrease this parameter value.

Decel Time

The decel time sets the ramp time between the motor torque level when stop was commanded and the decel end torque level.

If the motor stops rotating before the decel time has expired, decrease the decel time parameter. If the motor is still rotating when the decel time expires, increase the decel time parameter.

Braking Controls

7.5 Braking Controls

Overview

When the Stop Mode parameter is set to DC Brake, the MX^2 starter provides DC injection braking for fast and frictionless braking of a three-phase motor. The MX^2 starter applies a controlled DC current to the motor in order to induce a stationary magnetic field that then exerts a braking torque on the motor's rotating rotor. The braking current level and braking time required depends on the motor characteristics, the load inertia, and the friction in the system.

The MX^2 starter supports two different levels of DC injection braking:

1. Standard Duty Brake - For less than 6 x motor inertia.
2. Heavy Duty Brake - For NEMA specified inertia and two motor current feedback methods:
   a) Standard Current Transformers (CTs)
   b) Optional Hall Effect Current Sensor (LEM)

The optional Hall Effect Current sensor can be used when a more precise measurement of braking current is necessary. This can occur if the DC injection braking is applied when the source supply has a very high short circuit capability (very stiff) or in special instances when more precise braking current control is required. The appropriate brake type and feedback method is preset from the factory. Please consult Benshaw for more information if changes need to be made.

Maximum Load Inertia

The following table shows maximum load inertia, NEMA MG1 parts 12 and 20. A thermostat, thermistor or RTD MUST be installed to protect the motor from overheating.

	Speed - RPM						
	3600	**1800**	**1200**	**900**	**720**	**600**	**514**
HP	**Inertia (lb-ft2)**						
2	2.4	11	30	60	102	158	228
3	3.5	17	44	87	149	231	335
5	5.7	27	71	142	242	375	544
71/2	8.3	39	104	208	356	551	798
10	11	51	137	273	467	723	1048
15	16	75	200	400	685	1061	1538
20	21	99	262	525	898	1393	2018
25	26	122	324	647	1108	1719	2491
30	31	144	384	769	1316	2042	2959
40	40	189	503	1007	1725	2677	3881
50	49	232	620	1241	2127	3302	4788
60	58	275	735	1473	2524	3819	5680
75	71	338	904	1814	3111	4831	7010
100	92	441	1181	2372	4070	6320	9180
125	113	542	1452	2919	5010	7790	11310
150	133	640	1719	3456	5940	9230	-
200	172	831	2238	4508	7750	12060	-
250	210	1017	2744	5540	9530	14830	-
300	246	1197	3239	6540	11270	-	-
350	281	1373	3723	7530	-	-	-
400	315	1546	4199	8500	-	-	-
450	349	1714	4666	9460	-	-	-
500	381	1880	5130	-	-	-	-
600	443	2202	6030	-	-	-	-
700	503	2514	-	-	-	-	-
800	560	2815	-	-	-	-	-

7.5.1 DC Injection Braking, Standard Duty

The MX^2 Standard Duty Braking allows up to approximately 250% FLA current to be applied to the motor. The MX^2 Standard Duty package consists of an extra braking contactor that shorts Motor Terminals 2 & 3 together while braking, as DC current is applied by the MX^2 starter to provide moderate braking torque.

CAUTION: Contactor MUST NOT short phase T1 and phase T3.

⌘ **NOTE:** Contactor sizing requires AC1 contactor rating (Motor FLA / 1.6). The three contacts must be paralleled.

7.5.2 DC Injection Braking, Heavy Duty

The MX^2 Heavy Duty Braking allows up to 400% FLA current to be applied to the motor for maximum braking performance. The MX^2 Heavy Duty braking package includes a freewheel current path between phases 1 and 3 that consists of a fuse and a 7th SCR with gating card. In combination with the applied DC current from the MX^2 starter, the freewheeling current path greatly enhances available braking torque. When Braking, the stop must be counted as another motor start when looking at the motor starts per hour limit.

⌘ **NOTE:** Semi-Conductor Fuse and 7th SCR supplied by Benshaw.

7.5.3 Braking Output Relay

To utilize DC injection braking, one of the user output Relays needs to be programmed as a Braking relay. (Refer to the Relay Output Configuration parameters on page 112 for more information). The output of a Braking relay is needed to control the contactor and/or 7th SCR gating control card used during braking.

⌘ **NOTE:** Verify that the correct output relay is programmed to Braking and that the wiring of this relay is correct. Damage to the starter can result if the braking relay is not programmed and/or wired properly.

7.5.4 Stand Alone Overload Relay for emergency ATL (Across The Line) operation

Due to the currents being drawn on Line 1 and Line 3 for braking, this stand alone overload relay will cause nuisance current imbalance trips. For a solution consult factory.

7.5.5 DC Injection Brake Wiring Example

Figure 37: DC Injection Brake Wiring Example

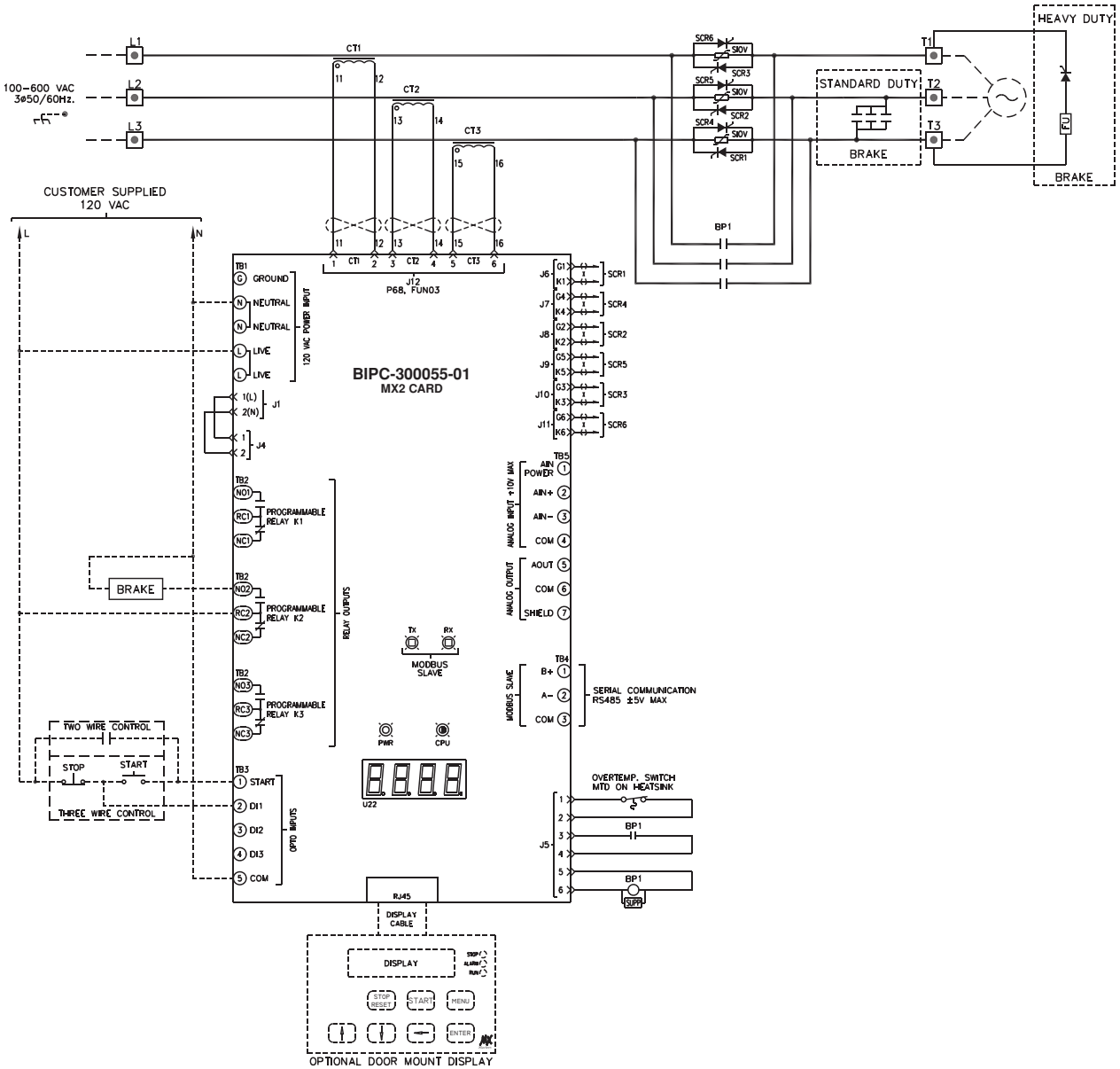

7.5.6 DC Brake Timing

The MX^2 DC injection brake timing is shown below:

Figure 38: DC Injection Brake Timing

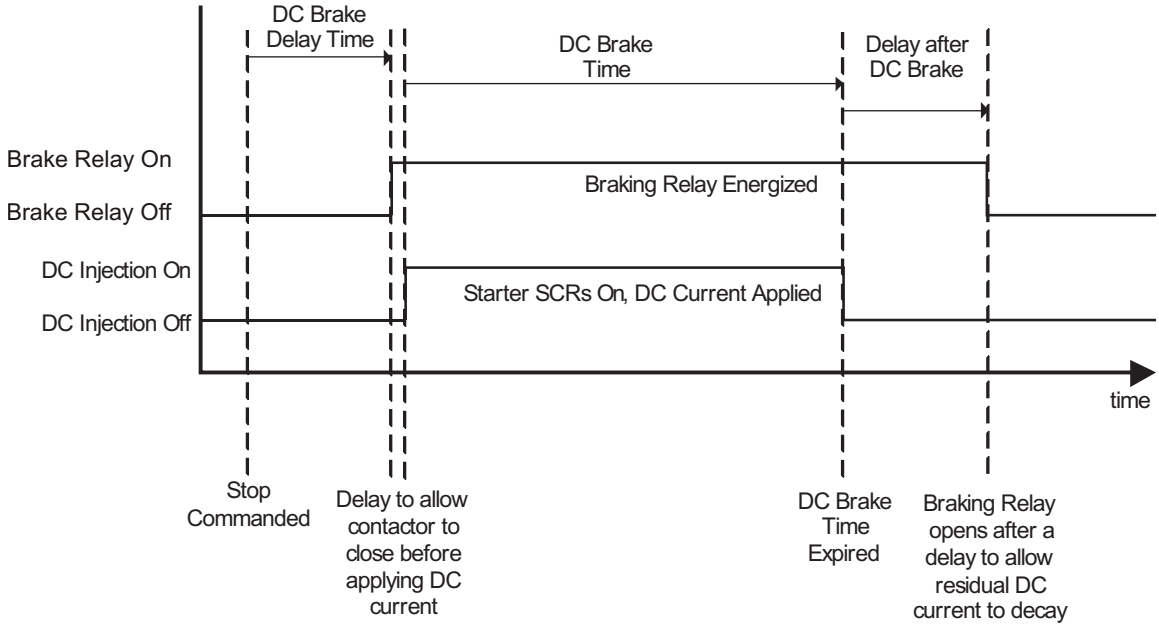

After the DC Brake Time has expired, the Braking Relay is held energized to allow the DC current to decay before opening the freewheel path. This delay prevents a contactor (if used) from having to open significant DC current which greatly prolongs the life of the contactor. This delay time is based on motor FLA, the larger the motor the longer the delay time. The delay after DC brake time is approximately:

Motor FLA	Delay after DC Brake Time
10 A	0.4 seconds
100 A	0.8 seconds
500 A	2.3 seconds
1000 A	4.3 seconds

Motor Overload Calculations During DC Injection Braking

During DC braking the MX^2 Solid State Motor Overload Protection is fully active. During braking the Running Motor Overload setting is used. The MX^2 adjusts the overload calculations based on whether Standard Duty or Heavy Duty braking is used. The overload calculations are also adjusted based on whether the standard Current Transformers (CTs) are used for current feedback or if the optional Hall Effect Current sensor is used for current feedback.

⌘ **NOTE:** Discretion must be used when DC injection braking. Motor heating during DC injection braking is similar to motor heating during starting. Although the Motor OL is active (if it has not been intentionally disabled), excessive rotor heating could still result if the load inertia is very large, braking level is high, or the brake time is set too long. Caution must be used to assure that the motor has the thermal capacity to brake the desired load in the desired period of time without excessive heating.

7.5.7 DC Injection Brake Enable and Disable Digital Inputs

Digital inputs can be programmed to either a Brake Enable or a Brake Disable. In the Brake Enable case the digital input must be energized for DC braking to occur. The braking will immediately stop if the brake enable is de-energized.

In the Brake Disable case, DC braking will occur unless the Brake Disable digital input is energized. DC braking will cease if the brake disable is energized. Once DC Braking is stopped due to a digital input state change, no further DC braking will take place and the starter will return to the idle state.

7.5.8 Use of Optional Hall Effect Current Sensor

The Hall Effect Current Sensor should be located on Phase 1 of the motor output wiring. The sensor should be located so that the sensor measures both the applied DC current from the starter as well as the freewheel current. The sensor is connected to the analog input of the MX^2 card along with a burden resistor. The analog input must be set to be a 0-10V voltage input for correct operation. The sensor scaling and burden resistance are factory selected. Please consult factory if changes to either the sensor scaling or burden resistance is required.

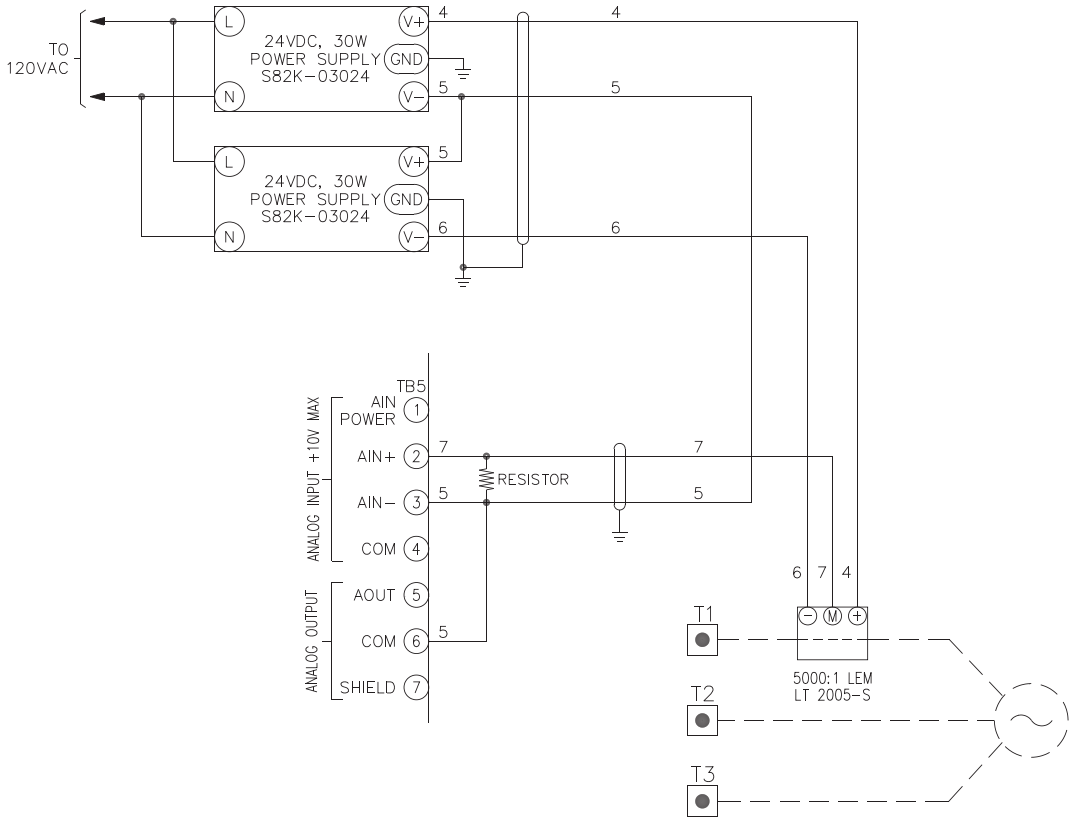

⌘ **NOTE:** Hall effect current sensor must be used when load inertia exceeds motor manufactures recommended specifications.

7.5.9 DC Injection Braking Parameters

Brake Level: The DC Brake Level parameter sets the level of DC current applied to the motor during braking. The desired brake level is determined by the combination of the system inertia, system friction, and the desired braking time. If the motor is braking too fast the level should be reduced. If the motor is not braking fast enough the level should be increased.

Brake Time: The DC Brake Time parameter sets the time that DC current is applied to the motor. The desired brake time is determined by the combination of the system inertia, system friction, and the desired braking level. If the motor is still rotating faster than desired at the end of the brake time increase the brake time if possible. If the motor stops before the desired brake time has expired decrease the brake time to minimize unnecessary motor heating.

Brake Delay: The DC Brake Delay Time is the time delay between when a stop is commanded and the DC braking current is applied to the motor. This delay allows the residual magnetic field and motor counter EMF to decay before applying the DC braking current. If a large surge of current is detected when DC braking is first engaged increase the delay time. If the delay before the braking action begins is too long then decrease the delay time. In general, low horsepower motors can utilize shorter delays while large horsepower motor may require longer delays.

Slow Speed Cyclo Converter

7.6 Slow Speed Cyclo Converter

The MX^2 Soft Starter implements a patented Slow Speed algorithm that can be used to rotate a three-phase AC motor, with control of the stator current, at speeds less than the rated synchronous speed of the motor. The algorithm is used with a standard three-phase six-switch SCR based soft starter. The advantages of the MX^2 starter algorithm over other "jogging" techniques are that: the low speed motor rotation is done without any additional hardware such as additional mechanical contactors and/or extra SCRs, the peak phase currents are reduced compared with other jogging techniques, motor heating is minimized, and higher shaft torque can be generated.

7.6.1 Operation

Slow speed forward and reverse operation is achieved by energizing a digital input that has been programmed to either Slow Speed Forward or Slow Speed Reverse (refer to the Digital Input Configuration parameters on page 110 for more information). The active Control Source (local or remote source) must be set to terminal. Slow Speed Start/Stop control is not available from the optional LCD keypad. The starter must be in the idle state in order to enter slow speed operation.

Relay outputs can be programmed to energize during slow speed operation (refer to the Relay Output Configuration parameters on page 112 for more information). This feature can be used to disable mechanical brakes or energize clutches during slow speed operation.

<u>Motor Overload Calculations During Slow Speed Operation</u>
During Slow Speed Operation the MX^2 Solid State Motor Overload Protection is fully active. During slow speed operation the Running Motor overload setting is used.

⌘ **NOTE:** When the motor is operating at slow speeds its cooling capacity can be greatly reduced. Therefore the running time of the motor at a given current level is dependant on the motor's thermal capacity. Although the Motor OL is active (if it has not been intentionally disabled) during slow speed operation it is recommended that the motor temperature be monitored if slow speed is used for long periods of time.

⌘ **NOTE:** For Continuous Slow Speed Operation, an RC2 is required.

7.6.2 Slow Speed Cyclo Converter Parameters

Slow Speed: The Slow Speed parameter selects the speed of motor operation when slow speed is selected. When set to Off, slow speed operation is disabled.

Slow Speed Current Level: The Slow Speed Current Level parameter selects the level of current applied to the motor during slow speed operation. The parameter is set as a percentage of motor full load amps (FLA). This value should be set to the lowest possible current level that will properly operate the motor.

Slow Speed Time Limit: The Slow Speed Time Limits parameter sets the amount of time that continuous operation of slow speed may take place. When this parameter is set to OFF the timer is disabled. This parameter can be used to limit the amount of continuous slow speed operation to protect the motor and/or load.

⌘ **NOTE:** The Slow Speed Time Limit includes the time used for the Slow Speed Kick if kick is enabled.

⌘ **NOTE:** The Slow Speed Time Limit resets when the motor is stopped. This timer does not prevent the operator from stopping and re-starting the motor which can result in the slow speed operation time of the motor being exceeded.

Slow Speed Kick Level: The Slow Speed Kick Level sets the short-term current level that is applied to the motor to accelerate the motor for slow speed operation. The Slow Speed Kick feature is disabled if it is set to off. Slow Speed Kick can be used to "break loose" difficult to start loads while keeping the operating slow speed current level lower.

This parameter should be set to a midrange value and then the Slow Speed Kick Time should be increased in 0.1 second intervals until the kick is applied long enough to start the motor rotating. If the motor does not start rotating with the set Slow Speed Kick Level increase the level and begin adjusting the kick time from 1.0 seconds again.

If the motor initially accelerates too fast then reduce the Slow Speed Kick Level and/or reduce the Slow Speed Kick Time.

Slow Speed Kick Time: The Slow Speed Kick Time parameter sets the length of time that the Slow Speed Kick current level is applied to the motor at the beginning of slow speed operation. After the Slow Speed Kick Level is set, the Slow Speed Kick Time should be adjusted so that the motor starts rotating when a slow speed command is given.

If the motor initially accelerates too fast then reduce the Slow Speed Kick Level and/or reduce the Slow Speed Kick Time.

Inside Delta Connected Starter

7.7 Inside Delta Connected Starter

There are differences between a line connected soft starter as shown in Figure 39 and the inside delta connected soft starter as shown in Figure 40 that need to be considered.

By observation of Figure 40, access to all six stator-winding terminals is required for an inside delta application. For a 12-lead motor, all 12 stator terminals must be accessible. In the line connected soft starter of Figure 39, access to only three leads of the stator windings of the motor is required.

One failed SCR on any phase of the inside delta soft starter results in a single-phase condition. A shunt trip circuit breaker is recommended to protect the motor in this case. A programmable relay can be configured as a shunt trip relay and can be used to trip the breaker. When certain faults occur, the shunt trip relay energizes.

The SCR control for an inside delta application is different than the SCR control for a standard soft starter. The Starter Type parameter needs to be properly set so that the SCRs are gated correctly.

If a circuit breaker is the only means to disconnect the soft starter and motor from the line, then one leg of the motor leads in the inside delta soft starter is always electrically live when the circuit breaker is closed. This requires caution to ensure these leads of the motor are not exposed to personnel.

7.7.1 Line Connected Soft Starter

In Figure 39, the power poles of the soft starter are connected in series with the line. The starter current equals the line current.

Figure 39: Typical Motor Connection

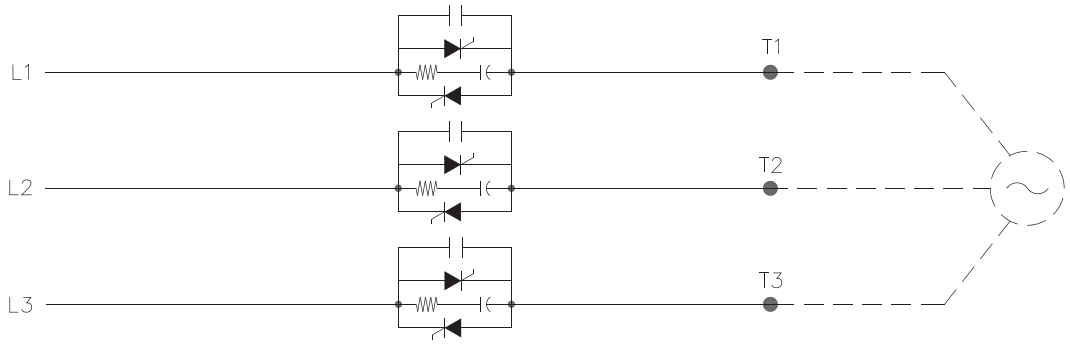

7.7.2 Inside Delta Connected Starter

An inside delta connected soft starter is shown in Figure 40, where the power poles are connected in series with the stator windings of a delta connected motor.

Figure 40: Typical Inside Delta Motor Connection

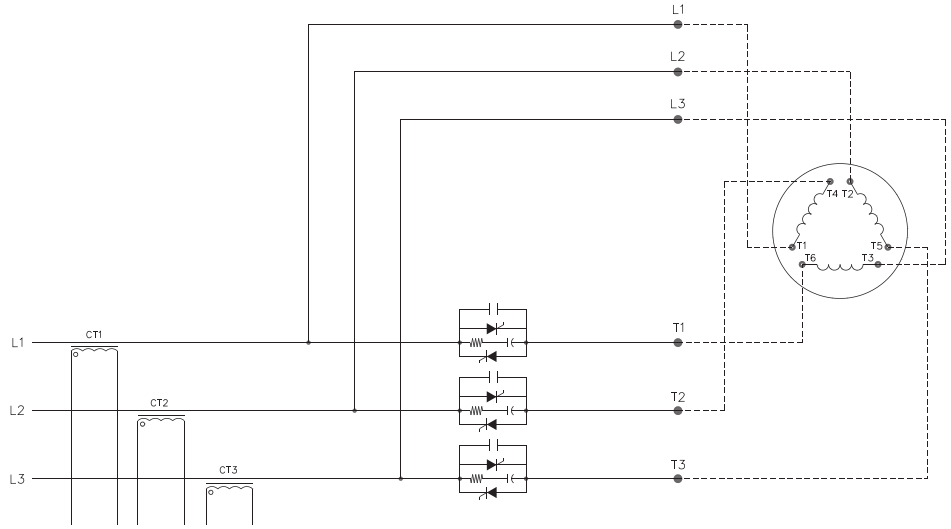

For an inside delta connected motor, the starter current is less than the line current by a factor of 1.55 (FLA/1.55). By comparison of Figure 39 and Figure 40, the most obvious advantage of the inside delta starter is the reduction of current seen by the soft starter. The soft starter can be downsized by a factor of 1.55, providing significant savings in cost and size of the starter.

An inside delta soft starter can also be considered for motors with more than 6 leads, including 12 lead dual voltage motors.

NEMA and IEC use different nomenclature for motor terminal markings, for 3 and 6 leaded motors.
NEMA labels motors leads, 1,2,3,4,5,6,
IEC labels motor leads, U1, V1, W1, U2, V2, W2

Wye Delta Starter

7.8 Wye Delta Starter

When the Starter Type parameter is set to Wye-Delta, the MX^2 is configured to operate an Electro mechanical Wye-Delta (Star-Delta) starter. When in Wye-Delta mode, all MX^2 motor and starter protective functions except bad SCR detection and power stack overload, are available to provide full motor and starter protection.

A typical closed transition Wye-Delta starter schematic is shown in the following figure.

Figure 41: Wye Delta Motor Connection to the MX^2

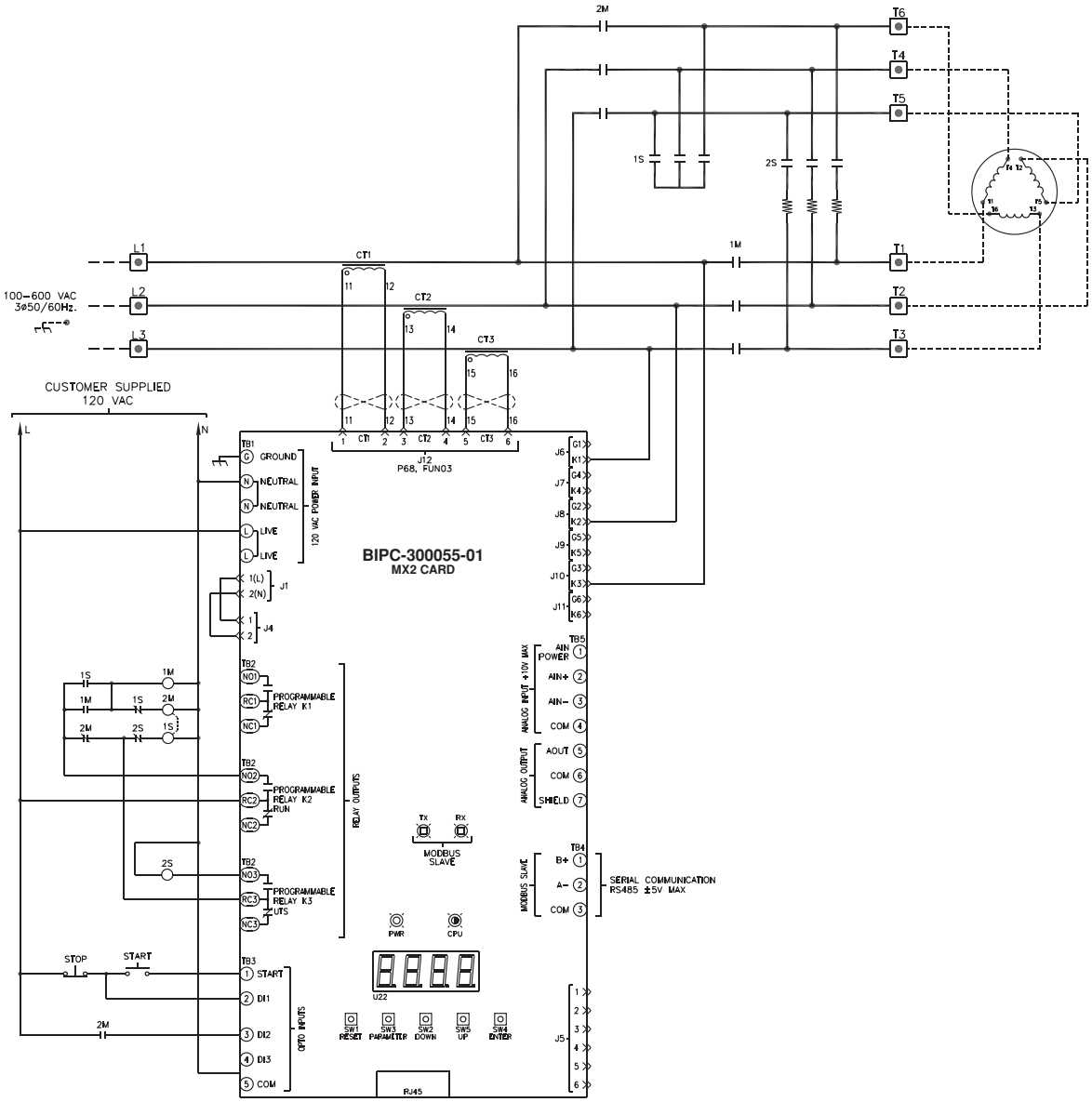

The MX^2 utilizes an intelligent Wye to Delta transition algorithm. During starting, if the measured motor current drops below 85% of FLA and more than 25% of the Up To Speed timer setting has elapsed, then a Wye to Delta transition occurs. The intelligent transition algorithm prevents unnecessarily long motor starts which reduces motor heating. If a Wye to Delta transition has not already occurred, a transition always occurs when the complete Up To Speed Time expires.

The MX^2 can operate two configurations of Wye-Delta starters, open transition and closed transition. An open transition starter momentarily disconnects the motor from the input line during the transition from Wye to Delta operating mode. A closed transition starter uses resistors that are inserted during the transition so that the motor is never completely disconnected from the input line. The presence of the resistors in a closed transition starter smooths the transition. A typical closed transition Wye-Delta starter schematic is shown in Figure 41 on page 160.

The closed transition resistors generally are sized to be in the circuit for a short period of time. To protect the resistors from over heating, one input should be programmed as a Bypass/2M contact feedback input and the Bypass/2M confirm parameter must be set.

For the Wye-Delta starter mode to operate properly one output relay needs to be programmed to the RUN output function and another output relay needs to be programmed to the UTS output function. (Refer to the Relay Output Configuration parameters on page 112 for more information).

Based on the typical closed transition schematic shown in Figure 41, when a start command is given, the starter enters the Wye starting mode by energizing the relay programmed as RUN.

The transition to Wye (Starting) mode occurs as follows:

1. Start command is given to the starter.
2. The RUN relay is energized which energizes the 1S contactor.
3. When the 1S contactor pulls in, the 1M contactor is energized.

The MX^2 starter remains in the Wye mode until either:

1. The start command is removed.
2. The Up To Speed Time expires.
3. The measured motor current is less than 85% of FLA and more than 25% of the Up To Speed Timer setting has elapsed.
4. A fault occurs.

When the Up To Speed Time expires, the starter changes from Wye starting mode to the Delta or normal running mode by energizing the relay programmed as UTS. In Delta mode, the RUN and UTS relays are both energized and the motor is connected in the normal running Delta configuration.

The transition to Delta (Run) mode occurs as follows:

1. The UTS relay is energized which energizes the 2S contactor.
2. When the 2S contactor pulls in, resistors are inserted in the circuit and the 1S contactor is de-energized.
3. When the 1S contactor drops out the 2M contactor is energized.
4. When the 2M contactor is pulled in, feedback can be sent to the MX^2 control card to confirm that the transition sequence to Delta is complete.

The starter remains in the Delta or running mode until the start command is removed or a fault occurs.

Usually the MX^2 intelligent Wye to Delta transition algorithm provides an optimal transition point that minimizes the transient current and torque surges that can occur. However, the Wye to Delta transition will occur when the Up To Speed Time parameter has expired. In order to reduce the current surge during the transition from Wye to Delta mode, the Up To Speed Time parameter should be adjusted so that the transition occurs as close to full speed as possible within the constraints of the load. If the Up To Speed Time is set too short, the starter will transition too soon and a large current and torque surge will occur. If the Up To Speed Time is set too long, the motor may not have sufficient torque to continue accelerating when in Wye mode and may stop accelerating at a low speed until the transition to Delta mode occurs. If this occurs, the start is unnecessarily prolonged and motor heating is increased.

A typical closed transition Wye-Delta starting current profile is shown in Figure 42.

Figure 42: Wye Delta Profile

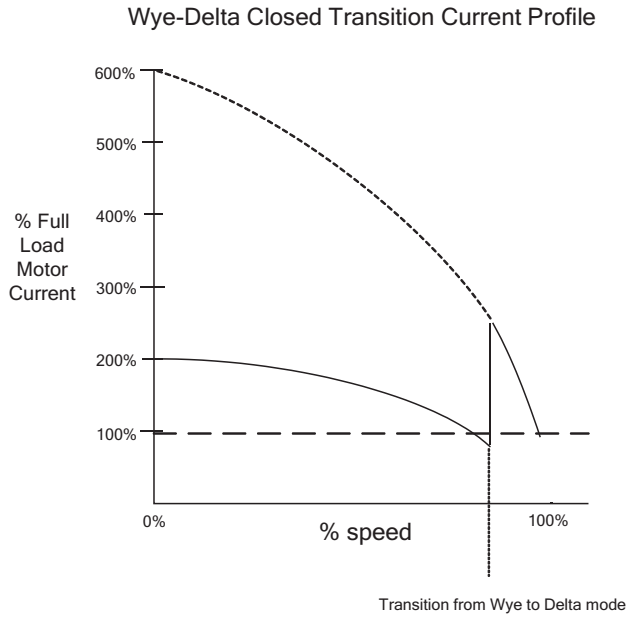

A digital input can be programmed as a 2M contactor feedback input. This input provides verification that the 2M contactor has fully closed preventing operation when the transition resistors are still connected in the motor circuit. The use of this feedback is recommended to prevent the overheating of the transition resistors if the 2M contactor does not close properly. The 2M confirmation trip time can be adjusted by modifying the Bypass Feedback Time parameter.

⌘ **NOTE**: When in Wye-Delta mode, the acceleration ramp, kick, and deceleration settings have no effect on motor operation.

⌘ **NOTE:** When in Wye-Delta mode, the SCR gate outputs are disabled.

Across The Line Starter

7.9 Across The Line (Full Voltage Starter)

When the Starter Type parameter is set to ATL, the MX^2 is configured to operate an Electro mechanical full voltage or across-the-line (ATL) starter.

In the ATL configuration, the MX^2 assumes that the motor contactor (1M) is directly controlled by an output relay that is programmed to RUN. Therefore, when a start command is given, the RUN programmed relay energizes the motor contactor, which applies power to the motor. When the MX^2 determines that the motor is at full speed, the up-to-speed (UTS) condition is indicated by energizing the UTS programmed relays. When configured as an ATL starter, all MX^2 motor and starter protective functions, except bad SCR detection and power stack overload, are available to provide full motor and starter protection.

Figure 43: A Typical ATL Starter Schematic with the MX^2

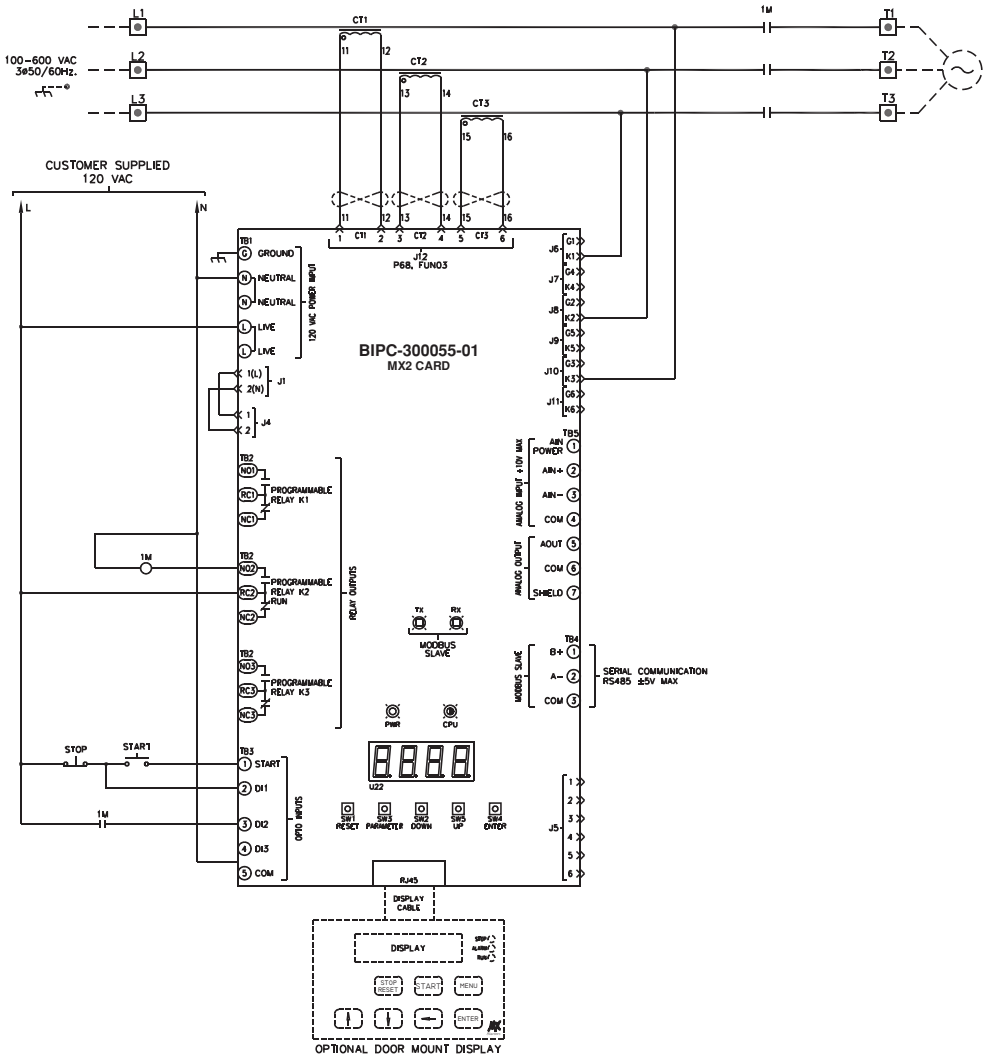

⌘ **NOTE:** When in ATL mode, the acceleration ramp, kick, and deceleration parameter settings have no effect on motor operation.

⌘ **NOTE:** When in ATL mode, the SCR gate outputs are disabled.

Single Phase Soft Starter

7.10 Single Phase Soft Starter

There are times a single phase motor may need to be started using a soft starter. This can be accomplished with any 3 phase starter with the following modifications to the starter.

- Connect Line power to terminals L1 and L3.
- Remove gate leads from J8 and J9 and tie off so the leads will not touch anything
- Remove gate leads from J6 and reinstall to J8, from J7 and reinstall to J9
- Change Input Phase Sensitivity, (P77/FUN 04) to “SPH” Single Phase.
- Connect motor to terminals T1 and T3.

Figure 44: Power Schematic for RB2 Integral Bypass Power Stack for Single Phase Operation

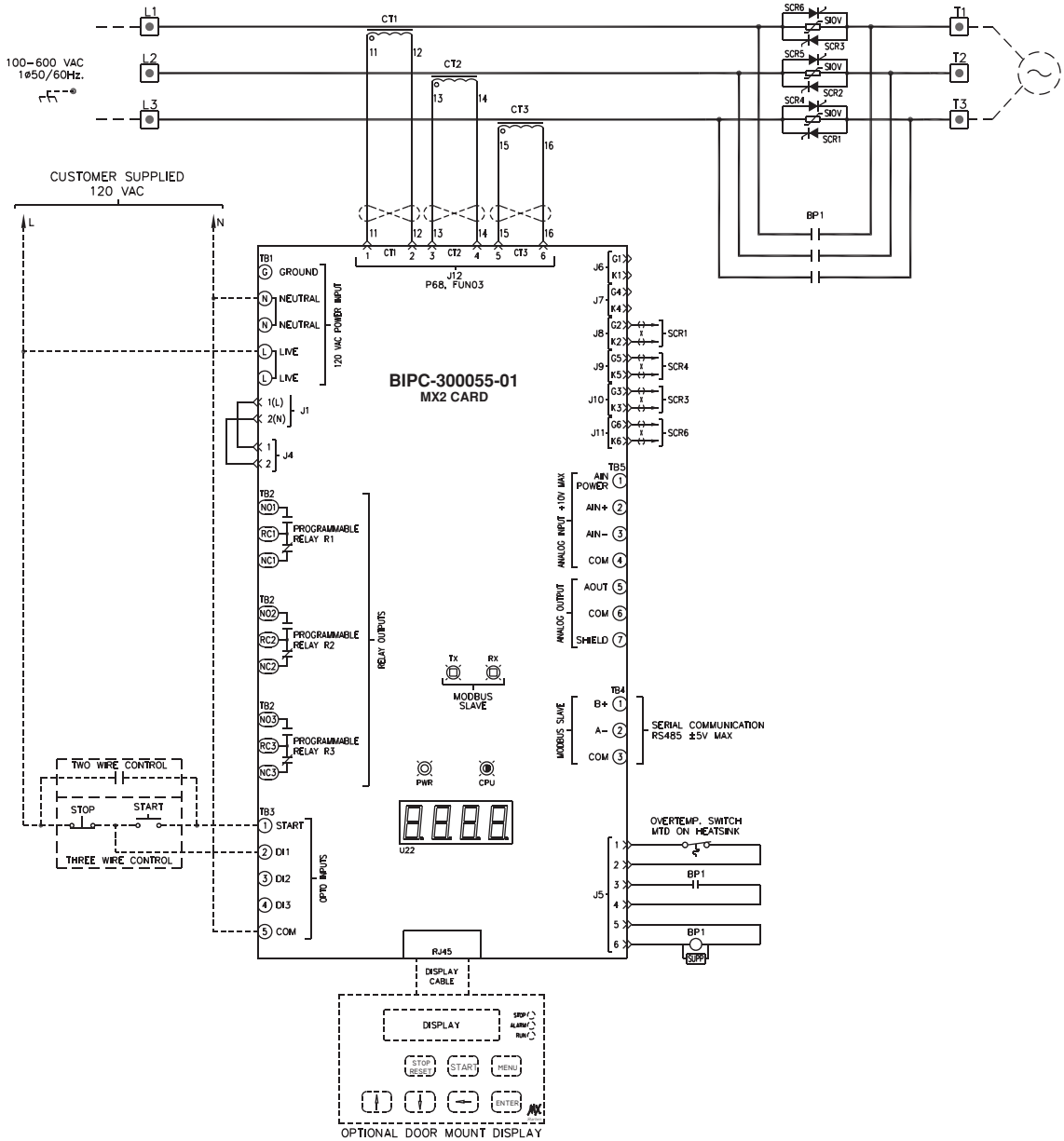

Phase Control

7.11 Phase Control

When the Starter Type parameter is set to Phase Control, the MX^2 is configured to operate as a phase controller or voltage follower. This is an open loop control mode. When a start command is given, the RUN programmed relays energize. The firing angles of the SCRs are directly controlled based on voltage or current applied to the Analog Input.

Phase control can be used to directly control the voltage applied to motors, resistive heaters, etc. When in Phase Control mode, the phase angle of the SCRs, and hence the voltage applied, is directly controlled based on the analog input signal. The MX^2 reference command can be generated from any 0-10V, 0-20mA or similar source, such as a potentiometer, another MX^2 or an external controller such as a PLC.

Figure 45: Phase Control Mode

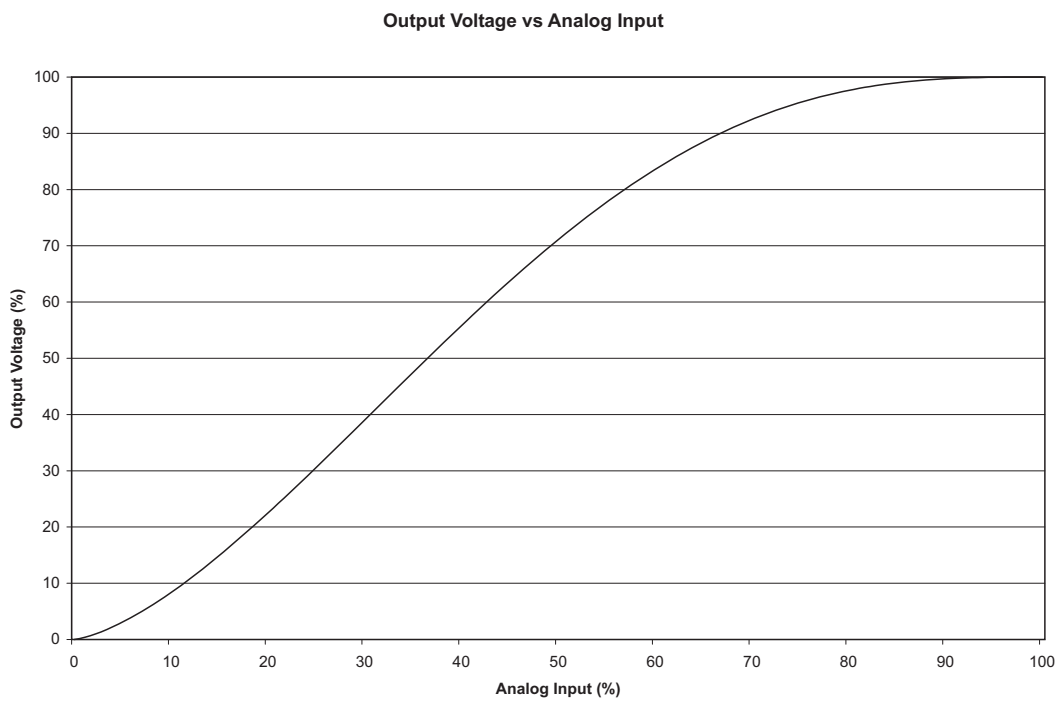

A reference input value of 0% results in no output. A reference input value of 100% results in full (100%) output voltage. The actual input voltage / current that results in a given output can be adjusted through the use of the Analog Input Offset and the Analog Input Span parameters.

⌘ NOTE: The power stack must be rated for continuous non-bypassed duty in order to operate in Phase Control mode continuously, NO BYPASS.

⌘ NOTE: When operating in Phase Control mode, the acceleration ramp, kick, and deceleration settings have no effect on operation.

⌘ NOTE: When in Phase Control mode the following motor / starter protective functions are available:

- Current Imbalance
- Over Current
- Current while Stopped
- Under Current
- Over Voltage
- Under Voltage
- Motor OL
- Residual Ground Fault
- Instantaneous Over Current (IOC)
- Phase Rotation
- Phase Loss
- Under Frequency
- Over Frequency

7.11.1 Master/Slave Starter Configuration:

In the master / slave configuration, one "master" starter can directly control the output of one or more "slave" starters. To utilize the master / slave configuration, one starter needs to be defined as the "master" starter. The Starter Type parameter of the "master" starter should be configured appropriately as a Soft Starter (normal or ID), Phase Controller or Current Follower. If configured as a soft starter, the acceleration and deceleration profiles need to be configured for proper operation.

To configure a master / slave application:

1. The analog output of the master MX^2 control card needs to be connected to the analog input(s) of the slave card(s).

2. The master MX^2's analog output needs to be configured. Set the Analog Output Function parameter to option 10 or "0 - 100% firing". The Analog Output Span parameter should be set to provide a 0-10V or 0-20 milliamp output to the slave starter(s). Adjust analog output jumper (JP1) to provide either a voltage or a current output. Set the slave MX^2's Starter Type parameter to Phase Control and verify that the Analog Input Offset and Analog Input Span parameters are set to accept the master signal.

3. The slave MX^2 needs to be provided with a start command from the master MX^2. A RUN programmed relay from the master MX^2 can be used to provide the start command to the slaves. The slave(s) Control Source parameters (Local Source and Remote Source) settings need to be set appropriately.

4. The slave MX^2 analog input(s) needs to be configured for the appropriate voltage or current input signal type. Set the analog input jumper (SWI-1) to the desired input type.

For additional master/slave application information, consult the factory.

Current Follower

7.12 Current Follower

When the Starter Type parameter is set to Current Follower, the MX^2 is configured to operate as a Closed Loop current follower. Current Follower mode can be used to control the current applied to motors, resistive heaters, etc. The Current Follower mode uses the analog input to receive the desired current command and controls the SCRs to output the commanded current. The MX^2's reference command can be generated from any 0-10V, 0-20mA or 4-20mA source such as a potentiometer, another MX^2 or an external controller such as a PLC.

Figure 46: Current Follower Mode

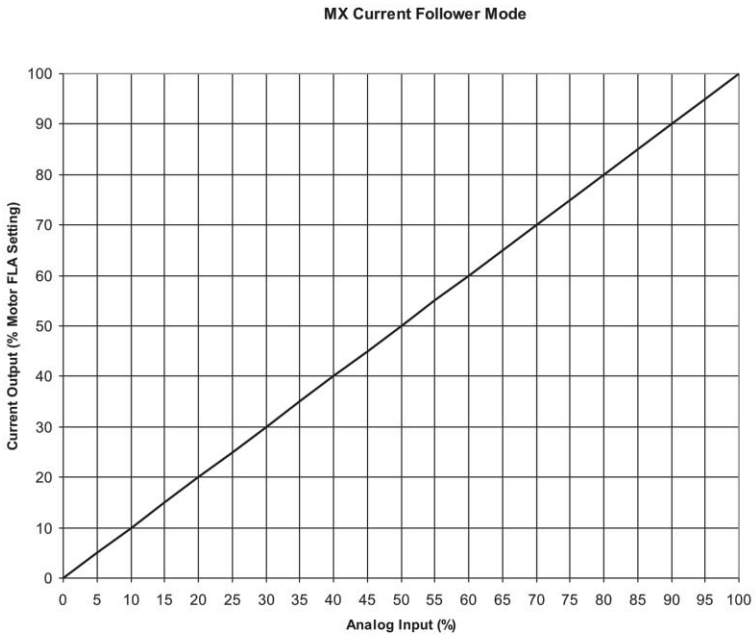

A reference input value of 0% results in no output. A reference input value of 100% results in a current output equal to the Motor FLA setting. The actual voltage or current input that results in a given output can be adjusted through the use of the Analog Input Offset and Analog Input Span parameters.

⌘ **NOTE:** The power stack must be rated for continuous non-bypassed duty in order to operate in Current Follower mode.

⌘ **NOTE:** When operating in Current Follower mode, the acceleration ramp, kick, and deceleration settings have no effect on operation.

⌘ **NOTE:** The following motor / starter protective functions are available when in Current Follower mode:

- Current Imbalance
- Over Current
- Under Current
- Over Voltage
- Under Voltage
- Over Frequency
- Under Frequency
- Phase Loss
- Phase Rotation
- Current while Stopped
- Motor OL
- Residual Ground Fault
- Instantaneous Over Current (IOC)

Start/Stop Control with a Hand/Off/Auto Selector Switch

7.13 Start/Stop Control Logic

Often times, a switch is desired to select between local or “Hand” mode and remote or “Auto” mode. In most cases, local control is performed as 3-wire logic with a normally open, momentary contact Start pushbutton and a normally closed, momentary contact Stop pushbutton, while remote control is performed as 2-wire logic with a “Run Command” contact provided by a PLC.

The MX^2 can perform both 2-wire start/stop logic and 3-wire start/stop logic. With 2-wire logic, the starter starts when a run command is applied to the Start input. It continues to run until the run command is removed from the Start input. With 3-wire logic, the starter starts when a start command is momentarily applied to the Start input and continues to run until an input programmed as a Stop input goes low.

The MX^2 automatically determines whether to use 2-wire logic or 3-wire logic by the presence of a high level on a Stop input. If there is an input programmed as a Stop input, and that input is high when the Start input goes high, then 3-wire start/stop logic is used. Otherwise, 2-wire start/stop logic is used. This feature eliminates the need for external logic relays often used to “seal in” the momentary Start and Stop pushbuttons, creating a 2-wire logic signal. The key is to have the Stop input be high when the Hand/Off/Auto switch is in the Hand position, but be low when the switch is in the Auto position.

CAUTION: It is important that the Stop push button be wired in front of the Start push button, otherwise the starter could be started when the Stop bush button is pressed and the Start button is pressed.

7.14 Hand/Off/Auto Selector Switch

The MX2 has the capability to use a selector switch to change the source of control. A popular use is to switch between using the door mounted display for Hand operation and using contact input for Auto operation. The following drawing shows how to wire the unit to allow this operation.

Figure 47: Example of Start/Stop with a Hand/Off/Auto Selector Switch

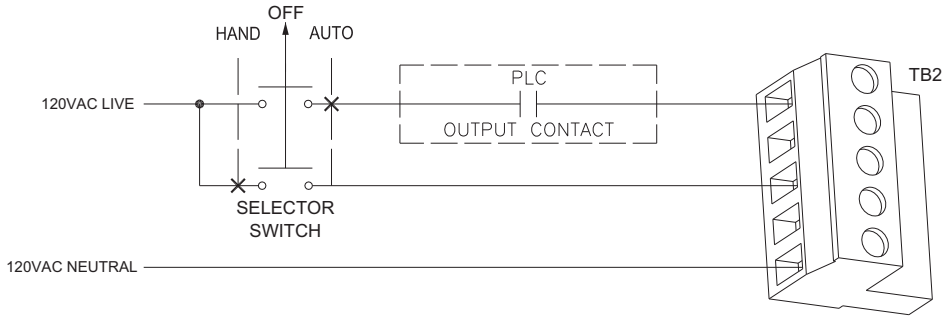

The following parameters have to be programmed into the starter:
P4: Local Source = Terminal
P5: Remote Source = Keypad
P49: DI2 Configuration = Local/Remote

Hand Position
The starter is switched to use the Remote Source via the selector switch which applies 120VAC to digital input 2. The Remote Source is programmed to Keypad so the keypad becomes active in this switch position.

Off Position
The starter is switched to use the Local Source via the selector switch which removes 120VAC from digital input 2. The Local Source is programmed to Terminal so the Start digital input becomes active in the switch position. However, the selector switch also disconnects control power from customer run contact so that 120VAC can not be applied to the Start digital input meaning the starter cannot be given a start command.

Auto Position
The starter is switched to use the Local Source via the selector switch which removes 120VAC from digital input 2. The Local Source is programmed to Terminal so the Start digital input becomes active in this switch position. The selector switch also connects control power to the customer run contact so that a start can be applied.

Simplified I/O Schematics

7.15 Simplified I/O Schematics

Figure 48: Digital Input Simplified Schematic

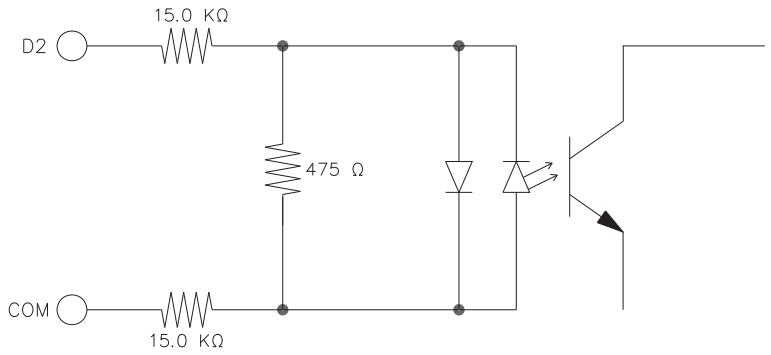

Figure 49: Analog Input Simplified Schematic

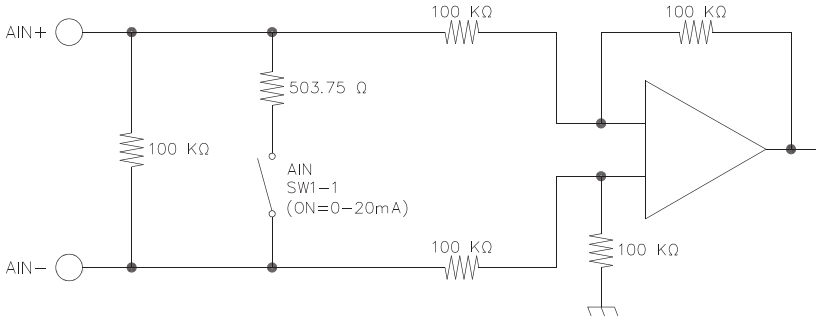

Figure 50: Analog Output Simplified Schematic

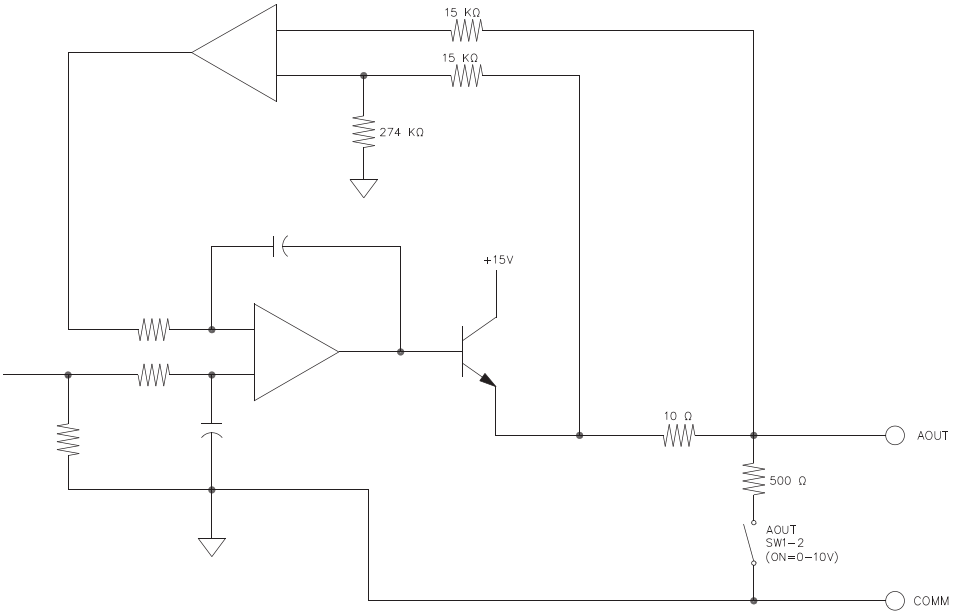

Remote Modbus Communications

Figure 49: TB4 Connector

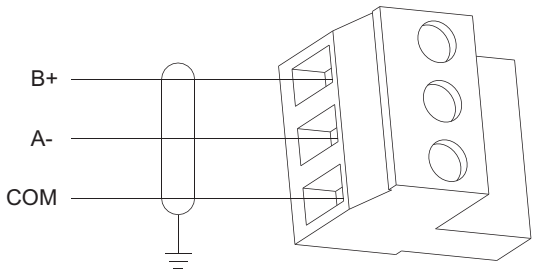

7.16 Remote Modbus Communications

The MX^2 starter provides a Modbus RTU to support remote communication.

The communication interface is RS-485, and allows up to 247 slaves to be connected to one master (with repeaters when the number of drops exceeds 31). Please refer to Figures 49 and 50 for connection diagrams.

7.16.1 Supported Commands

The MX^2 supports the following Modbus commands:

- Read Holding Registers (03 hex)
- Read Input Registers (04 hex)
- Preset Single Register (06 hex)
- Preset Multiple Registers (10 hex)

Up to 64 registers may be read or written with a single command.

7.16.2 Modbus Register Addresses

The Modbus specification defines holding registers to begin at 40001 and input registers to begin at 30001. Holding registers may be read and written. Input registers may only be read.

In the MX^2, the register maps are identical for both the holding registers and the input registers. For example, the Motor FLA parameter is available both in holding register 40101 and in input register 30101. This is why the register addresses in the Modbus Register Map are listed with both numbers (e.g. 30101/40101).

7.16.3 Cable Specifications

Good quality twisted, shielded communications cable should be used when connecting to the Modbus port on the MX^2. The cable should contain two twisted pairs and have an overall shield. Use one pair of conductors for the A(-) and B(+) signals. Use the other pair of conductors for the Common signal. The cable should adhere to the following specifications.

- Conductors: 2 twisted pair
- Impedance: 100 Ohm to 120 Ohm
- Capacitance: 16 pF/ft or less
- Shield: Overall shield or individual pair shields

Examples of cables that meet these specifications are Belden part number 9842 and Alpha Wire part number 6412.

7.16.4

Figure 50: Modbus Network Wiring Example

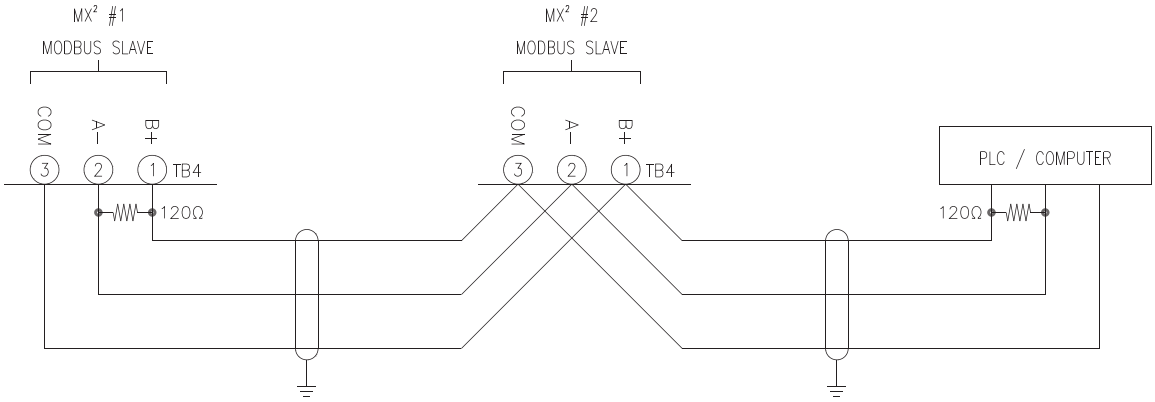

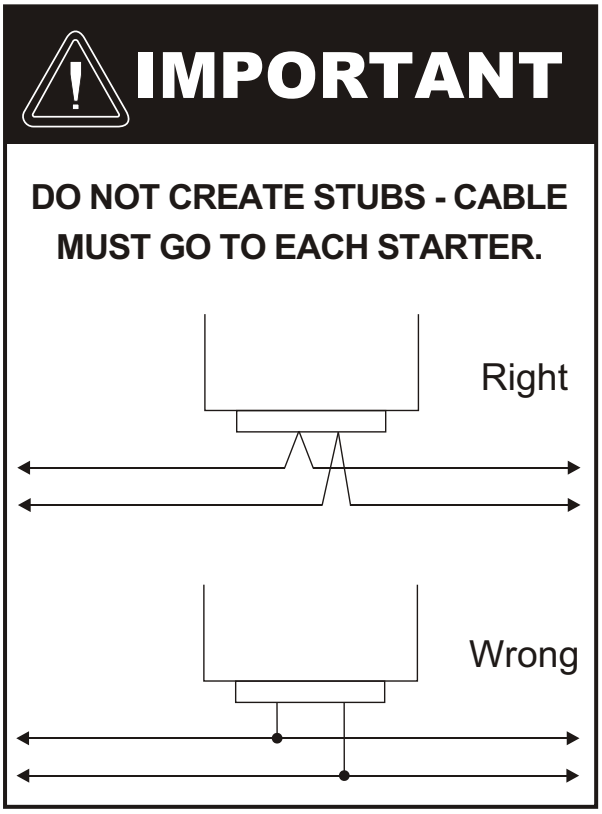

8 Troubleshooting & Maintenance

Safety Precautions

8.1 Safety Precautions

For safety of maintenance personal as well as others who might be exposed to electrical hazards associated with maintenance activities, the safety related work practices of NFPA 70E, Part II, should always be followed when working on electrical equipment. Maintenance personnel must be trained in the safety practices, procedures, and requirements that pertain to their respective job assignments.

WARNING: To avoid shock hazard, disconnect main power before working on controller/starter, motor or control devices such as start/stop pushbuttons. Procedures which require parts of the equipment to be energized during troubleshooting, testing, etc. must be performed by properly qualified personnel, using appropriate work practices and precautionary measures as specified in NFPA70, Part II.

CAUTION: Disconnect the controller/starter from the motor before measuring insulation resistance (IR) of the motor windings. Voltages used for insulation resistance testing can cause failure of SCR's. Do not make any measurements on the controller with an IR tester (megger).

Preventative Maintenance

8.2 Preventative Maintenance

8.2.1 General Information

Preventative maintenance performed on a regular basis will help ensure that the starter continues to operate reliably and safely. The frequency of preventative maintenance depends upon the type of maintenance and the installation site's environment.

⌘ **NOTE:** A trained technician should always perform preventative maintenance.

8.2.2 Preventative Maintenance

During Commissioning:

- Torque all power connections during commissioning. This includes factory wired equipment.
- Check all of the control wiring in the package for loose connections.
- If fans are installed, ensure proper operation

One month after the starter has been put in operation:

- Re-torque all power connections. This includes factory wired equipment.
- Inspect the cooling fans to ensure proper operation.

After the first month of operation:

- Re-torque all power connections every year.
- Clean any accumulated dust from the starter using a clean source of compressed air.
- Inspect the cooling fans every three months to ensure proper operation.
- Clean or replace any air vent filters on the starter every three months.

⌘ **NOTE:** If mechanical vibrations are present at the installation site, inspect the electrical connections more frequently.

General Troubleshooting Charts

8.3 General Troubleshooting Charts

The following troubleshooting charts can be used to help solve many of the more common problems that may occur.

8.3.1 Motor does not start, no output to motor

Condition	Cause	Solution
Display Blank, CPU Heartbeat LED on MX^2 board not blinking.	Control voltage absent.	Check for proper control voltage input. Verify fuses and wiring.
	MX^2 control board problem.	Consult factory.
Fault Displayed.	Fault Occurred.	See fault code troubleshooting table for more details.
Start command given but nothing happens.	Start/Stop control input problems.	Verify that the start/stop wiring and start input voltage levels are correct.
	Control Source parameters (QST 04-05, P4-5) not set correctly.	Verify that the parameters are set correctly.
NOL or No Line is displayed and a start command is given, it will fault in F28.	No line voltage has been detected by the MX^2 when a start command is given.	Check input supply for inline contactor, open disconnects, open fuses, open circuit breakers, or disconnected wiring.
		Verify that the SCR gate wires are properly connected to the MX^2 control board.
		On medium voltage systems, verify wiring of the voltage feedback measurement circuit.
		See fault code troubleshooting table for more details.

8.3.2 During starting, motor rotates but does not reach full speed

Condition	Cause	Solution
Fault Displayed.	Fault Occurred.	See fault code troubleshooting table for more details.
Display shows Accel or Run.	Maximum Motor Current setting (P7/QST07) set too low.	Review acceleration ramp settings.
	Motor loading too high and/or current not dropping below 175% FLA indicating that the motor has not come up to speed.	Reduce load on motor during starting.
	Motor FLA (P1/QST01) or CT ratio (P78/FUN03) parameter set incorrectly.	Verify that Motor FLA and CT ratio parameters are set correctly.
	Abnormally low line voltage.	Fix cause of low line voltage.
	A mechanical or supplemental brake is still engaged.	Verify that any external brakes are disengaged.
Motor Hums before turning.	Initial current to low.	Increase initial current.
	FLA or CT incorrect..	Verify FLA and CT settings.

8.3.3 Starter not accelerating as desired

Condition	Cause	Solution
Motor accelerates too quickly.	Ramp time (P8/QST08) too short.	Increase ramp time.
	Initial current (P6/QST06) set too high.	Decrease Initial current.
	Maximum current (P7/QST07) set too high.	Decrease Maximum current.
	Kick start current (P13/CFN10) too high.	Decrease or turn off Kick current.
	Kick start time (P14/CFN11) too long.	Decrease Kick time.
	Motor FLA (P1/QST01) or CT ratio (P78/FUN03) parameter set incorrectly.	Verify that Motor FLA and CT ratio parameters are set correctly.
	Starter Type parameter (P64/FUN07) set incorrectly.	Verify that Starter Type parameter is set correctly.
Motor accelerates too slowly	Maximum Motor Current setting (P7/QST07) set too low.	Review acceleration ramp settings.
	Motor loading too high.	Reduce load on motor during starting.
	Motor FLA (P1/QST01) or CT ratio (P78/FUN03) parameter set incorrectly.	Verify that Motor FLA and CT ratio parameters are set correctly.
	Abnormally low line voltage.	Fix cause of low line voltage.
	Ramp time to long.	Decrease ramp time.

8.3.4 Starter not decelerating as desired

Condition	Cause	Solution
Motor stops too quickly.	Decel Time (P18/CFN17) set too short.	Increase Decel Time.
	Decel Begin and End Levels (P16/CFN15 and P17/CFN16) set improperly.	Increase Decel Begin and/or Decel End levels.
Decel time seems correct but motor surges (oscillates) at beginning of deceleration cycle.	Decel Begin Level (P16/CFN15) set too high.	Decrease Decel Begin Level until surging is eliminated.
Decel time seems correct but motor stops before end of deceleration cycle.	Decel End Level (P17/CFN16) set too low.	Increase Decel End Level until motor just stops at the end of the deceleration cycle.
Water hammer still occurs at end of cycle.	Decel End Level (P17/CFN16) set too high.	Decrease Decel End Level until water hammer is eliminated.
	Decel Time (P18/CFN17) too short.	If possible, increase Decel Time to decelerate system more gently.
Motor speed drops sharply before decel	Decel begin level to low.	Increase the Decel Begin Level until drop in speed is eliminated.

8.3.5 Motor stops unexpectedly while running

Condition	Cause	Solution
Fault Displayed.	Fault Occurred.	See fault code troubleshooting table for more details.
Ready Displayed.	Start command lost.	Verify start command input signal is present or serial communications start command is present.
		Check any permissive that may be wired into the run command. (Start/Stop)
Display Blank, Heartbeat LED on MX^2 card not blinking.	Control voltage absent.	Check for proper control voltage input. Verify wiring and fuses.
	MX^2 control card problem.	Consult factory.

8.3.6 Metering incorrect

Condition	Cause	Solution
Power Metering not reading correctly.	CTs installed or wired incorrectly.	Verify correct CT wiring and verify that the CTs are installed with all the White dots towards the input line side. CT1=L1 CT2=L2 CT3=L3
	CT ratio parameter (P78/FUN03) set incorrectly.	Verify that the CT ratio parameter is set correctly.
PF Meter not reading correctly.	CTs installed or wired incorrectly.	Verify correct CT wiring and verify that the CTs are installed with all the White dots towards the input line side.
Motor Current or Voltage meters fluctuating with steady load.	Energy Saver active.	Turn off Energy Saver if not desired.
	Loose connections.	Shut off all power and check all connections.
	SCR fault.	Verify that the SCRs gate leads are connected properly and the SCRs are ok.
	Load actually is not steady.	Verify that the load is actually steady and that there are not mechanical issues.
	Other equipment on same power feed causing power fluctuations and/or distortion.	Fix cause of power fluctuations and/or distortion.
Voltage Metering not reading correctly.	In medium voltage systems, Rated Voltage parameter (P76/FUN05) set incorrectly.	Verify that Rated Voltage parameter is set correctly.
Current Metering not reading correctly.	CT ratio parameter (P78/FUN03) set incorrectly.	Verify that the CT ratio parameter is set correctly.
	CTs installed or wired incorrectly.	Verify correct CT wiring and verify that the CTs are installed with all the White dots towards the input line side.CT1=L1 CT2=L2 CT3=L3
Ground Fault Current Metering not reading correctly.	CT ratio parameter (P78/FUN03) set incorrectly.	Verify that the CT ratio parameter is set correctly.
	CTs installed or wired incorrectly.	Verify correct CT wiring and verify that the CTs are installed with all the White dots towards the input line side.CT1=L1 CT2=L2 CT3=L3

8.3.7 Other Situations

Condition	Cause	Solution
Motor Rotates in Wrong Direction.	Phasing incorrect.	If input phasing correct, exchange any two output wires.
		If input phasing incorrect, exchange any two input wires.
Erratic Operation.	Loose connections.	Shut off all power and check all connections.
Motor Overheats.	Motor overloaded.	Reduce motor load.
	Too many starts per hour.	Allow for adequate motor cooling between starts. Set Hot/Cold ratio higher or lengthen cooling time.
	High ambient temperature.	Reduce ambient temperature or provide for better cooling. Set OL class lower to compensate for ambient temperature.
	Acceleration time too long.	Reduce starting load and/or review acceleration ramp settings.
	Incorrect motor OL settings.	Review and correct motor OL settings.
	Motor cooling obstructed/damaged.	Remove cooling air obstructions. Check motor cooling fan.
Starter cooling fans do not operate. (When Present)	Fan power supply lost.	Verify fan power supply, check fuses.
	Fan wiring problem.	Check fan wiring.
	Fan failure.	Replace fan.
Analog Output not functioning properly.	Voltage/Current output switch(SWI-2) not set correctly.	Set switch SW1 to give correct output.
	Wiring problem.	Verify output wiring.
	Analog Output Function parameter (P60/ I/O12) set incorrectly.	Verify that the Analog Output Function parameter is set correctly.
	Analog Output Offset and/or Span parameters (P61/ I/O13 and P62/ I/O14) set incorrectly.	Verify that the Analog Output Span and Offset parameters are set correctly.
	Load on analog output too high.	Verify that load on analog output meets the MX^2 analog output specifications.
	Ground loop or noise problems.	Verify correct grounding of analog output connection to prevent noise and/or ground loops from affecting output.
Remote Keypad does not operate correctly.	Keypad cable not plugged in properly or cable is damaged.	Verify that the remote keypad cable has not been damaged and that it is properly seated at both the keypad and the MX^2 control card.
	Remote display damaged.	Replace remote display.
Cannot change parameters.	Passcode is set.	Clear passcode.
	Starter is running.	Stop starter.
	Modbus is overriding.	Stop communications.
	Heater Level (P73 / FUN08) parameter is "On"	Turn Heater Level (P73 / FUN08) parameter "Off"

Fault Code Table

8.4 Fault Code Table

The following is a list of possible faults that can be generated by the MX^2 starter control.

Fault Code	Description	Detailed Description of Fault / Possible Solutions
F01	UTS Time Limit Expired	Motor did not achieve full speed before the UTS timer (P9/QST09) expired.
		Check motor for jammed or overloaded condition.
		Verify that the combined kick time (P14/CFN11) and acceleration ramp time (P8/QST08) is shorter than the UTS timer setting.
		Evaluate acceleration ramp settings. The acceleration ramp settings may be too low to permit the motor to start and achieve full speed. If so, revise acceleration ramp settings to provide more motor torque during starting.
		Evaluate UTS timer setting and, if acceptable, increase UTS timer setting (P9/QST09).
F02	Motor Thermal Overload Trip	Check motor for mechanical failure, jammed, or overloaded condition.
		Verify the motor thermal overload parameter settings (P3/QST03 and P44-P47/PFN12-PFN16,) and motor service factor setting (P2/QST02).
		Verify that the motor FLA (P1/QST01) and CT ratio (P78/FUN03) are correct.
		If motor OL trip occurs during starting, review acceleration ramp profile settings.
		Verify that there is not an input line power quality problem or excessive line distortion present.
F03	Slow Speed Timer Limit Expired	Increase Slow Speed Time Limit (P29/CFN23)
F10	Phase Rotation Error, not ABC	Input phase rotation is not ABC and Input Phase Sensitivity parameter (P77/FUN04) is set to ABC only.
		Verify correct phase rotation of input power. Correct wiring if necessary.
		Verify correct setting of Input Phase Sensitivity parameter (P77/FUN04).
F11	Phase Rotation Error, not CBA	Input phase rotation is not CBA and Input Phase Sensitivity parameter (P77/FUN04) is set to CBA only.
		Verify correct phase rotation of input power. Correct wiring if necessary.
		Verify correct setting of Input Phase Sensitivity parameter (P77/FUN04).
F12	Low Line Frequency	Line frequency below 23 Hz was detected.
		Verify input line frequency.
		If operating on a generator, check generator speed governor for malfunctions.
		Check input supply for open fuses or open connections.
		Line power quality problem / excessive line distortion..

Fault Code	Description	Detailed Description of Fault / Possible Solutions
F13	High Line Frequency	Line frequency above 72 Hz was detected.
		Verify input line frequency.
		If operating on a generator, check generator speed governor for malfunctions.
		Line power quality problem / excessive line distortion.
F14	Input power not single phase	Three-phase power has been detected when the starter is expecting single-phase power.
		Verify that input power is single phase.
		Verify that single-phase power is connected to the L1 and L3 inputs. Correct wiring if necessary.
		Verify that the SCR gate wires are properly connected to the MX^2 control card.
F15	Input power not three phase	Single-phase power has been detected when the starter is expecting three-phase power.
		Verify that input power is three phase. Correct wiring if necessary.
		Verify that the SCR gate wires are properly connected to the MX^2 control card.
		On medium voltage systems, verify wiring of the voltage feedback measurement circuit.
F21	Low Line L1-L2	Low voltage below the Under voltage Trip Level parameter setting (P39/PFN08) was detected for longer than the Over/Under Voltage Trip delay time (P40/PFN09).
		Verify that the actual input voltage level is correct.
		Verify that the Rated Voltage parameter (P76/FUN05) is set correctly.
		Check input supply for open fuses or open connections.
		On medium voltage systems, verify wiring of the voltage measurement circuit.
F22	Low Line L2-L3	Low voltage below the Under voltage Trip Level parameter setting (P39/PFN08) was detected for longer than the Over/Under Voltage Trip delay time (P40/PFN09).
		Verify that the actual input voltage level is correct.
		Verify that the Rated Voltage parameter (P76/FUN05) is set correctly.
		Check input supply for open fuses or open connections.
		On medium voltage systems, verify wiring of the voltage feedback measurement circuit.
F23	Low Line L3-L1	Low voltage below the Under voltage Trip Level parameter setting (P39/PFN08) was detected for longer than the Over/Under Voltage Trip delay time (P40/PFN09).
		Verify that the actual input voltage level is correct.
		Verify that the Rated Voltage parameter (P76/FUN05) is set correctly.
		Check input supply for open fuses or open connections.
		On medium voltage systems, verify wiring of the voltage feedback measurement circuit.

Fault Code	Description	Detailed Description of Fault / Possible Solutions
F24	High Line L1-L2	High voltage above the Over voltage Trip Level parameter setting (P35/PFN07) was detected for longer than the Over/Under Voltage Trip delay time (P40/PFN09).
		Verify that the actual input voltage level is correct.
		Verify that the Rated Voltage parameter (P76/FUN05) is set correctly.
		Line power quality problems/ excessive line distortions.
F25	High Line L2-L3	High voltage above the Over voltage Trip Level parameter setting (P38/PFN07) was detected for longer than the Over/Under Voltage Trip delay time (P40/PFN09).
		Verify that the actual input voltage level is correct.
		Verify that the Rated Voltage parameter (P76/FUN05) is set correctly.
		Line power quality problems/ excessive line distortions.
F26	High Line L3-L1	High voltage above the Over voltage Trip Level parameter setting (P38/PFN07) was detected for longer than the Over/Under Voltage Trip delay time (P40/PFN09).
		Verify that the actual input voltage level is correct.
		Verify that the Rated Voltage parameter (P76/FUN05) is set correctly.
		Line power quality problems/ excessive line distortions.
F27	Phase Loss	The MX^2 has detected the loss of one or more input or output phases when the starter was running. Can also be caused by line power dropouts.
		Check input supply for open fuses.
		Check power supply wiring for open or intermittent connections.
		Check motor wiring for open or intermittent connections.
		On medium voltage systems, verify wiring of the voltage feedback measurement circuit.
		Check Gate and Cathode connections to MX^2 card.
F28	No Line	No input voltage was detected for longer than the Inline Configuration time delay parameter setting (P63/ I/O16) when a start command was given to the starter.
		If an inline contactor is being used, verify that the setting of the Inline Configuration time delay parameter (P53/ I/O16) allows enough time for the inline contactor to completely close.
		Check input supply for open disconnects, open fuses, open circuit breakers or disconnected wiring.
		Verify that the SCR gate wires are properly connected to the MX^2 control card.
		On medium voltage systems, verify wiring of the voltage feedback measurement circuit.

Fault Code	Description	Detailed Description of Fault / Possible Solutions
F30	I.O.C. (Instantaneous Over current)	During operation, the MX^2 detected a very high level of current in one or more phases.
		Check motor wiring for short circuits or ground faults.
		Check motor for short circuits or ground faults.
		Check if power factor or surge capacitors are installed on the motor side of the starter.
		Verify that the motor FLA (P1/QST01) and CT ratio (P78/FUN03) settings are correct.
F31	Overcurrent	Motor current exceeded the Over Current Trip Level setting (P32/PFN01) for longer than the Over Current Trip Delay Time setting (P33/PFN02).
		Check motor for a jammed or an overload condition.
F34	Undercurrent	Motor current dropped under the Under Current Trip Level setting (P26/PFN03) for longer than the Under Current Trip Delay time setting (P27/PFN04).
		Check system for cause of under current condition.
F37	Current Imbalance	A current imbalance larger than the Current Imbalance Trip Level parameter setting (P36/PFN05) was present for longer than ten (10) seconds.
		Check motor wiring for cause of imbalance. (Verify dual voltage and 6 lead motors for correct wiring configuration).
		Check for large input voltage imbalances that can result in large current imbalances.
		Check motor for internal problems.
F38	Ground Fault	Ground current above the Ground Fault Trip level setting (P37/PFN06) has been detected for longer than 3 seconds.
		Check motor wiring for ground faults.
		Check motor for ground faults.
		Megger motor and cabling (disconnect from starter before testing).
		Verify that the motor FLA (P1/QST01) and CT ratio (P78/FUN03) settings are correct.
		Verify that the CTs are installed with all the White dots towards the input line.
		In Single phase applications, verify that only two CTs are being used; that they are installed with all the White dots or Xs in the correct direction; and that the CTs are connected to the L1 and L3 CT inputs on the MX^2 control card.
F39	No Current at Run	Motor current went below 10% of FLA while the starter was running.
		Verify Motor Connections.
		Verify the CT wiring to the MX^2control card.
		Verify that the motor FLA (P1/QST01) and CT ratio (P78.FUN03) settings are correct.
		Check if load is still connected to starter.
		Check if motor may have been driven by the load (a regeneration condition).
		Check Gate and Cathode connections to MX^2 for loose connections.
		Check for inline contactor or disconnect.

Fault Code	Description	Detailed Description of Fault / Possible Solutions
F40	Shorted / Open SCR	A shorted or open SCR condition has been detected.
		Verify that all SCR gate leads wires are properly connected at the SCR devices and the MX^2 control card.
		Check all SCRs with ohmmeter for shorts.
		Verify that the Input Phase Sensitivity parameter setting (P77/FUN04) is correct.
		Verify that the Starter Type parameter setting (P74/FUN07) is correct.
		Verify the motor wiring. (Verify dual voltage motors for correct wiring configuration).
F41	Current at Stop	Motor current was detected while the starter was not running.
		Examine starter for shorted SCRs.
		Examine bypass contactor (if present) to verify that it is open when starter is stopped.
		Verify that the motor FLA (P1/QST01) and CT ratio (P78/FUN03) settings are correct.
F46	Disconnect Fault	A signal on the disconnect digital input was not present when a start was commanded.
		Verify that disconnect feedback wiring is correct.
		Verify that the disconnect is not faulty.
F47	Stack Protection Fault (stack thermal overload)	The MX^2 electronic power stack OL protection has detected an overload condition.
		Check motor for jammed or overloaded condition.
		Verify that the CT ratio (P78/FUN03) and burden switch settings are correct.
		Motor load exceeds power stack rating. Consult factory
F48	Bypass /2M Contactor Fault	An incorrect bypass feedback has been detected for longer than the Bypass Confirm time parameter setting (P64/ I/O17).
		Verify that the bypass/2M contactor coil and feedback wiring is correct.
		Verify that the relay connected to the bypass/2M contactor(s) is programmed as the UTS function.
		Verify that the bypass/2M contactor power supply is present.
		Verify that the appropriate Digital Input Configuration parameter has been programmed correctly.
		Verify that the bypass contactor(s) are not damaged or faulty.
F49	Inline Contactor Fault	Verify that the appropriate Digital Input Configuration parameter has been programmed correctly.
		Verify that the inline contactor(s) are actually not damaged or faulty.
F50	Control Power Low	Low control power (below 90V) has been detected while running.
		Verify that the control power input level is correct, especially during starting when there may be significant line voltage drop.
		Check control power transformer tap setting (if available).
		Check control power transformer fuses (if present).
		Check wiring between control power source and starter.

Fault Code	Description	Detailed Description of Fault / Possible Solutions
F51	Current Sensor Offset Error	Indicates that the MX^2 control card self-diagnostics have detected a problem with one or more of the current sensor inputs.
		Verify that the motor FLA (P1/QST01), CT ratio (P78/FUN03) and burden switch settings are correct.
		Verify that no actual current is flowing through any of the starter's CTs when the starter is not running.
		Consult factory if fault persists.
F54	BIST Fault	The starter has detected a voltage or a current. Remove line power from input of starter. Disconnect must be open.
F55	BIST CT Fault	Verify CT location, CT1 on L1, CT2 on L2, CT3 on L3. or CTs are connected backwards (the polarity dot must be facing the supply line).
F60	External Fault on DI#1 Input	DI#1 has been programmed as a fault type digital input and the input indicates a fault condition is present.
		Verify that the appropriate Digital Input Configuration parameter has been programmed correctly.
		Verify wiring and level of input.
F61	External Fault on DI#2 Input	DI#2 has been programmed as a fault type digital input and input indicates a fault condition is present.
		Verify that the appropriate Digital Input Configuration parameter has been programmed correctly.
		Verify wiring and level of input.
F62	External Fault on DI#3 input	DI#3 input has been programmed as a fault type digital input and input indicates a fault condition is present.
		Verify that the appropriate Digital Input Configuration parameter has been programmed correctly.
		Verify wiring and level of input.
F71	Analog Input Level Fault Trip	Based on the Analog Input parameter settings, the analog input level has either exceeded or dropped below the Analog Input Trip Level setting (P56/ I/O 09) for longer than the Analog Input Trip Delay time (P57/ I/O 010).
		Measure value of analog input to verify correct reading.
		Verify settings of all Analog Input parameters (P55-P59/ I/O 08- I/O 12).
		Verify correct positioning of input switch (SW1) (Voltage or Current) on the MX^2 control card.
		Verify correct grounding of analog input connection to prevent noise or ground loops from affecting input.
F81	Keypad Communication Fault	Indicates that communication has been lost with the remote keypad. (This fault normally occurs if the remote keypad is disconnected while the MX^2 control card is powered up. Only connect and disconnect a remote keypad when the control power is off).
		Verify that the remote keypad cable has not been damaged and that its connectors are firmly seated at both the keypad and the MX^2 control card.
		Verify that the display interface card (when present) is firmly attached to MX^2 control card.
		Route keypad cables away from high power and/or high noise areas to reduce possible electrical noise pickup.

F82	Modbus Timeout Fault	Indicates that the starter has lost serial communications. Fault occurs when the starter has not received a valid serial communications within the Communication Timeout parameter (FUN12) defined time.
		Verify communication parameter settings (FUN 10 - FUN13).
		Check wiring between the remote network and the MX^2 control card.
		Examine remote system for cause of communication loss
F94	CPU Error - SW Fault	Typically occurs when attempting to run a version of control software that is incompatible with the MX^2 control card hardware being used. Verify that the software is a correct version for the MX^2 control card being used. Consult factory for more details.
		Fault can also occur if the MX^2 control has detected an internal software problem. Replace card.
F95	CPU Error - Parameter EEPROM Checksum Fault	The MX^2 found the non-volatile parameter values to be corrupted. Typically occurs when the MX^2 is re-flashed with new software.
		Perform a Factory Parameter reset (FUN 15) and then properly set all parameters before resuming normal operation.
		If fault persists after performing a Factory Parameter reset, replace card.
F96	CPU Error	The MX^3 has detected an internal CPU problem. Replace card.
F97	CPU Error – SW Watchdog Fault	The MX^3 has detected an internal software problem. Replace card.
F98	CPU Error	The MX^3 has detected an internal CPU problem. Replace card.
F99	CPU Error - Program EPROM Checksum Fault	The non-volatile program memory has been corrupted.
		Replace card. Control software must be reloaded in to MX^2 control card before normal operation can resume.

SCR Testing

8.5 SCR Testing

8.5.1 Resistance

The SCRs in the starter can be checked with a standard ohmmeter to determine their condition.

Remove power from the starter before performing these checks.

- Check from L to T on each phase. The resistance should be over 50k ohms.
- Check between the gate leads for each SCR (red and white twisted pair).
  The resistance should be from 8 to 50 ohms.

⌘ **NOTE:** The resistance measurements may not be within these values and the SCR may still be good. The checks are to determine if an SCR is shorted "L" to "T" of if the gate in an SCR is shorted or open. An SCR could also still be damaged even though the measurements are within the above specifications.

8.5.2 Voltage

When the starter is running, the operation of the SCRs can be confirmed with a voltmeter.

Extreme caution must be observed while performing these checks since the starter has lethal voltages applied while operating.

While the starter is running and up to speed, use an AC voltmeter, check the voltage from "L" to "T" of each phase. The voltage should be less than 1.5 Volts. If the starter has a bypass contactor, the voltage drop should be less than 0.3 volts.

Using a DC voltmeter, check between the gate leads for each SCR (red and white twisted pair). The voltage should between 0.5 and 2.0 volts.

8.5.3 Integral Bypass

A voltage check from "L" to "T" of each phase of the RediStart starter should be preformed every 6 months to confirm the bypass contactors are operating correctly.

Extreme caution must be observed while performing these checks since the starter has lethal voltages applied while operating.

While the starter is running and Up to Speed, use an AC voltmeter; check the voltage from "L" to "T" of each phase. The voltage drop across the contactor contacts should be less than 300mV. If greater that 300mV the integral bypass should be disassembled. It may be necessary to clean the contact tips or replace the contactor.

Built-In Self Test Functions

8.6 Built In Self Test Functions

The MX^2 has two built in self test (BIST) modes. The first test is the standard self test and is used to test many of the basic functions of the starter without line voltage being applied. The second test is a line powered test that is used to verify the current transformer's locations and connections and to test for shorted SCRs/power poles, open or non-firing SCRs/power poles, and ground fault conditions.

8.6.1 Standard BIST Tests:

(P67 / #7) / FUN 15 - Std BIST

The standard BIST tests are designed to be run with no line voltage applied to the starter. In selected low voltage systems where a disconnect switch is used, the Disconnect Switch must be opened before starting the standard tests. Standard BIST mode can be initiated by entering the appropriate value into P67 or FUN 15 - Misc Command user parameter.

CAUTION: In order to prevent back feeding of voltage through the control power transformer (if used), control power must be carefully applied to the MX^2 control card and contactors so that self testing can occur safely. In low voltage applications, the user must verify that the applied test control power cannot be fed backwards through the system. "Run/Test" isolation switches, test power plugs, and wiring diagrams are available from Benshaw.

CAUTION: In low voltage systems with an inline/isolation contactor. Before the inline test is performed verify that no line voltage is applied to the line side of the inline contactor. Otherwise when the inline test is performed the inline contactor will be energized, applying line voltage to the starter, and a BIST test fault will occur.

The standard BIST tests comprise of:

Programming / Test Instructions:

Step 1

LED Display
Go to P67 and press [ENTER].
Press [UP] button to #1 and press [ENTER].
Powered BIST test will commence.

LCD Display
Go to FUN 15- misc commands and press [ENTER].
Increment up to "Std BIST" and press [ENTER].
Std BIST test will commence.

```
FUN:Misc Command
15  Std BIST
```

⌘ **NOTE:** Designed to run with no line voltage applied to starter.

Step 2– RUN relay test and Inline Feedback Test:

In this test, the RUN assigned relays are cycled on and off once and the feedback from an inline contactor is verified. In order to have a valid inline contactor feedback, a digital input needs to be set to Inline Confirm and the input needs to be wired to an auxiliary contact of the inline contactor. The feedback is checked in both the open and closed state. If the feedback does not match the state of the RUN relay within the amount of time set by the Inline Config parameter an "Inline" fault will occur.

⌘ **NOTE:** If no digital input is assigned as an Inline Confirm input this test will always pass.

⌘ **NOTE:** If the Inline Config (I/O 16) parameter on page 118 is set to "Off" this test will be skipped.

LED Display	**LCD Display** (BIST Mode)
b ic (inline closed)	Inline Closed
b io (inline open)	Inline Open

```
BIST Mode
Inline Closed
```

```
BIST Mode
Inline Open
```

Step 3– UTS relay test and Bypass Feedback Test:

In this test, the dedicated bypass relay (if assigned) and the UTS assigned relays are cycled on and off once, and the feedback from a bypass contactor is verified. In order to have a valid bypass contactor feedback, the individual bypass input and any other inputs set to Bypass Confirm input needs to be wired to an auxiliary contact of the bypass contactor. The feedback is checked in both the open and closed state. If the feedback does not match the state of the UTS relay within the amount of time set by the Bypass Feedback parameter a "Bypass/2M Fault" will occur.

⌘ **NOTE**: If one dedicated bypass is set to "fan" and if no digital input are assigned as a Bypass Confirm input, this test will always pass.

LED Display	**LCD Display** (BIST Mode)
b bc (bypass closed)	Bypass Closed
b bo (bypass open)	Bypass Open

```
BIST Mode
Bypass Closed
```

```
BIST Mode
Bypass Open
```

Step 4– Sequential SCR gate firing (L1+, L1-, L2+, L2-, L3+, L3-):

In this test the SCR gate outputs are sequentially fired starting with the L1+ device(s) and ending with the L3- device(s). This test can be used to verify that the SCR gate leads are connected properly. In LV systems, the gate voltage can be verified using a DC voltage meter or oscilloscope. The voltage on each red and white wire pair should be between 0.5VDC and 2.0VDC.

LED Display	**LCD Display** (BIST Mode)
b 96 (gate 6 on)	Gate 6 On
b 93 (gate 3 on)	Gate 3 On
b 95 (gate 5 on)	Gate 5 On
b 92 (gate 2 on)	Gate 2 On
b 94 (gate 4 on)	Gate 4 On
b 91 (gate 1 on)	Gate 1 On

```
BIST Mode
Gate  G?  On
```

Step 5– Simultaneous SCR gate firing:

In this test the SCR gate outputs are simultaneously fired (all gates on). This test can be used to verify that the SCR gate leads are connected properly. The gate voltage can be verified using a DC voltage meter or oscilloscope. The voltage on each red and white wire pair should be between 0.5VDC and 2.0VDC.

Pressing [ENTER] on the keypad at any time will abort the current test in progress and proceed to the next BIST test.

During the standard BIST tests if line voltage or phase current is detected, the MX^2 will immediately exit BIST mode and declare a "BIST Abnormal Exit" fault.

LED Display	**LCD Display**
b 9A (all gates on)	All Gates On

```
BIST Mode
All gates on
```

Step 6

LED Display	**LCD Display**
b-- (tests completed)	Tests completed

```
BIST Mode
Tests completed
```

8.6.2 Powered BIST Tests:

(P67 / #8) / FUN 15 - Powered BIST

The powered BIST tests are designed to be run with normal line voltage applied to the starter and a motor connected. Powered BIST verifies that the power poles are good, no ground faults exist, CTs are connected and positioned correctly and that the motor is connected. Powered BIST mode can be entered by entering the appropriate value into the FUN 15- Miscellaneous Command user parameter.

⌘ **NOTE:** The powered BIST test is only for use with SCR based reduced voltage soft starters. Powered BIST can not be used with wye-delta or ATL types of starters.

⌘ **NOTE:** The motor wiring MUST be fully connected before starting the powered BIST tests. Also the motor must be at rest (stopped). Otherwise the powered BIST tests will not function correctly.

⌘ **NOTE:** Before using the powered BIST test function, the following MX^2 user parameters MUST be set for correct operation of the powered BIST test: Motor FLA (P1 / QST 01), CT Ratio (P78 / FUN 03), Phase Order (P77 / FUN 04), Rated Voltage (P76 / FUN 05), and Starter Type (P74 / FUN 07).

The powered BIST tests comprise of:

Programming / Test Instructions:

Step 1

LED Display	**LCD Display**
Go to P67 and press [ENTER].	Go to FUN 15 and press [ENTER].
Press [UP] button to #2 and press [ENTER].	Increment up to "Powered BIST" and press [ENTER].
Powered BIST test will commence.	Powered BIST test will commence.

```
FUN:Misc Command
15  Powered BIST
```

Step 2– Shorted SCR and Ground Fault Test:

In this test each power pole is energized individually. If current flow is detected, the MX^2 controller attempts to differentiate whether it is a shorted SCR/shorted power pole condition or a ground fault condition and either a "Bad SCR Fault" or "Ground Fault" will occur.

LED Display	**LCD Display** (BIST Mode)
b 59 -(Gating individual SCRs)	Shorted SCR / GF

```
BIST Mode
Shorted SCR/GF
```

Step 3– Open SCR and Current Transformer (CT) Test:

In this test, a low-level closed-loop controlled current is selectively applied to various motor phases to verify that the motor is connected, all SCRs are turning on properly, and that the CTs are wired and positioned properly. If current is detected on the wrong phase then a "BIST CT Fault" fault will be declared. If an open motor lead, open SCR, or non-firing SCR is detected then a "Bad SCR Fault" will occur.

⌘ **NOTE:** When this test is in progress 6 audible humming or buzzing sounds will be heard from the motor.

LED Display	**LCD Display** (BIST Mode)
b oc	Open SCR / CTs

```
BIST Mode
Open SCR/CTs
```

Step 4

LED Display	**LCD Display**
b-- (tests completed)	Tests completed.

```
BIST Mode
Tests completed
```

Pressing [ENTER] on the keypad at any time will abort the current test in progress and proceed to the next BIST test.

⌘ **NOTE**: If line voltage is lost during the powered tests a "BIST Abnormal Exit" fault will occur.

⌘ **NOTE:** The powered BIST tests will verify that the input phase order is correct. If the measured phase order is not the same as the "Phase Order" (FUN 04) parameter a phase order fault will occur.

SCR Replacement

8.7 SCR Replacement

This section is to help with SCR replacements on stack assemblies. Please read prior to installation.

8.7.1 Typical Stack Assembly

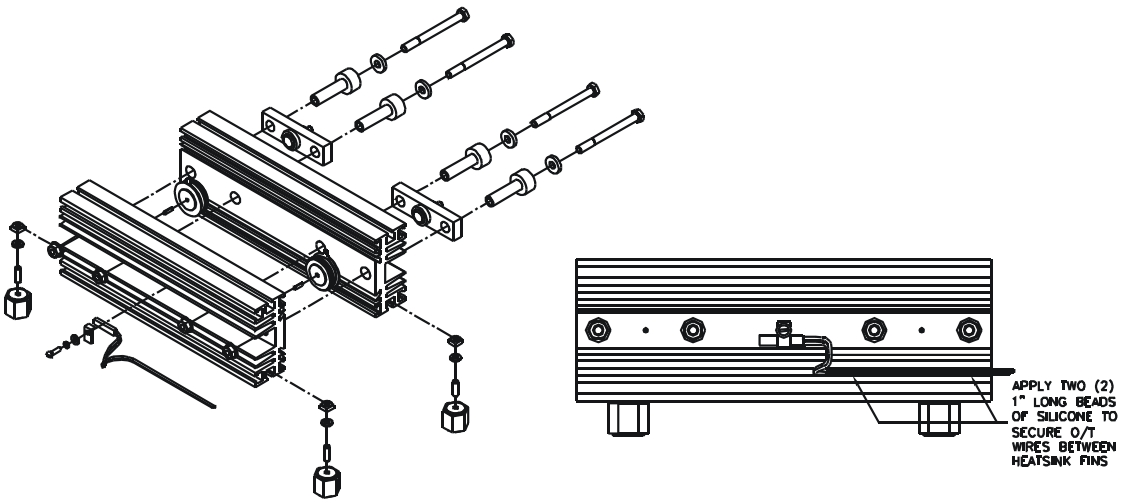

8.7.2 SCR Removal

To remove the SCR from the heatsink, loosen the two bolts (3) on the loader bar side of the clamp. Do not turn on the nuts (5). The nuts have a locking ridge that sink into the aluminum heatsink. Do ¼ turns until the SCR comes loose. Remove the SCRs from the heatsink.

⌘ **NOTE:** Do not loosen nut on indicator washer (6). This will change the clamping pressure of the clamp and the clamp will be defective.

8.7.3 SCR Installation

- Coat the faces of the SCRs to be installed with a thin layer of EJC (Electrical Joint Compound).
- Place the SCRs onto the dowel pins. The top SCR will have the cathode to the left and the bottom SCR will have the cathode to the right. The SCR symbol has a triangle that points to the cathode.
- Finger tighten nuts on the bolts.

8.7.4 SCR Clamp

Below is an exploded view of a typical SCR clamp. Refer to the Clamp Parts List below for names of the parts being used.

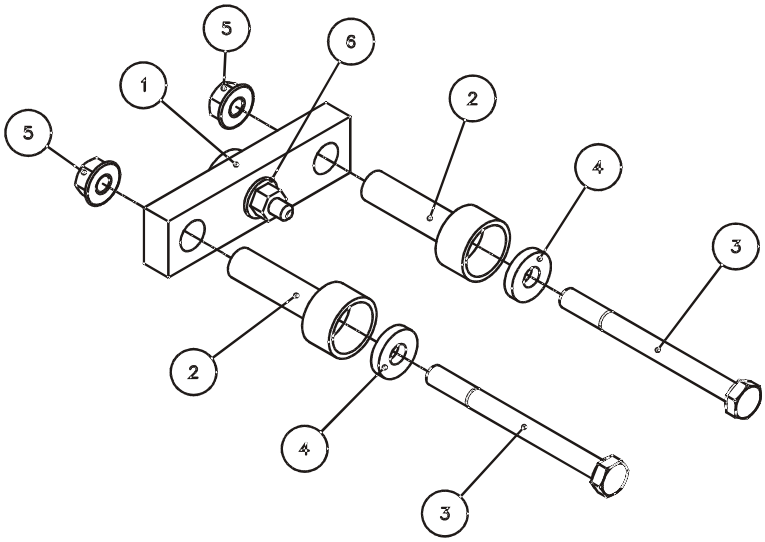

SCR CLAMP PARTS

Item #	Quantity	Description
1	1	Loader Bar
2	2	Insulator cup
3	2	Bolt
4	2	Washer
5	2	Serrated nut (larger style clamp has 1 support bar)
6	1 or 2	Indicator Washer – Quantity dependant on style of clamp

8.7.5 Tightening Clamp

Finger tighten the clamp. Ensure both bolts are tightened an equal amount so that the loader bar (item 1) is square in the heatsink. Tighten the bolts equally in 1/8 turn increments until the indicator washer(s) (item 6), which are under the nut(s) in the center of the loader bar, becomes loose indicating the clamp is tight. On the loader bars with two indicator washers, it may be necessary to tighten or loosen one side of the clamp to get both indicator washers free.

8.7.6 Testing SCR

After the SCRs have been replaced, conduct the resistance test as defined in section 8.5.

Appendices

Alarm Codes

The following is a list of all MX^2 alarm codes. The alarm codes correspond to associate fault codes. In general, an alarm indicates a condition that if continued, will result in the associated fault.

Alarm Code	Description	Notes
A02	Motor Overload Alarm	This occurs when the motor thermal content reaches the 90%. The MX^2 trips when it reaches 100%. The alarm continues until the overload trip lockout is reset.
A10	Phase Rotation not ABC	This alarm exists while the MX^2 is stopped, line voltage is detected and phase sensitivity parameter is set to ABC. If a start is commanded, a Fault 10 occurs.
A11	Phase Rotation not CBA	This alarm exists while the MX^2 is stopped, line voltage is detected and phase sensitivity parameter is set to CBA. If a start is commanded, a Fault 11 occurs.
A12	Low Line Frequency	This alarm exists when the MX^2 has detected a line frequency below the user defined low line frequency level. The alarm continues until either the line frequency changes to be in range or the fault delay timer expires.
A13	High Line Frequency	This alarm exists when the MX^2 has detected a line frequency above the user defined high line frequency level. The alarm continues until either the line frequency changes to a valid frequency or the fault delay timer expires.
A14	Input power not single phase	This alarm exists while the MX^2 is stopped, set to single phase mode, and line voltage is detected that is not single phase. If a start is commanded, a Fault 14 occurs.
A15	Input power not three phase	This alarm exists while the MX^2 is stopped, set to a three-phase mode, and single-phase line voltage is detected. If a start is commanded, a Fault 15 occurs.
A21	Low Line L1-L2	This alarm exists while the MX^2 is stopped and low line voltage is detected. If a start is commanded, a Fault 21 may occur.
A22	Low Line L2-L3	This alarm exists while the MX^2 is stopped and low line voltage is detected. If a start is commanded, a Fault 22 may occur.
A23	Low Line L3-L1	This alarm exists while the MX^2 is stopped and low line voltage is detected. If a start is commanded, a Fault 23 may occur.
A24	High Line L1-L2	This alarm exists while the MX^2 is stopped and high line voltage is detected. If a start is commanded, a Fault 24 may occur.
A25	High Line L2-L3	This alarm exists while the MX^2 is stopped and high line voltage is detected. If a start is commanded, a Fault 25 may occur.
A26	High Line L3-L1	This alarm exists while the MX^2 is stopped and high line voltage is detected. If a start is commanded, a Fault 26 may occur.
A27	Phase Loss	This alarm exists while the MX^2 is running and a phase loss condition is detected, but the delay for the fault has not yet expired. When the delay expires, a Fault 27 occurs.
A28	No Line	This alarm exists while the MX^2 needs to be synchronized or is trying to sync to the line and no line is detected.
A31	Overcurrent	This alarm exists while the MX^2 is running and the average current is above the defined threshold, but the delay for the fault has not yet expired. When the delay expires, a Fault 31 occurs.
A34	Undercurrent	This alarm exists while the MX^2 is running and the average current is below the defined threshold, but the delay for the fault has not yet expired. When the delay expires, a Fault 34 occurs.
A37	Current Imbalance	This alarm exists while the MX^2 is running and a current imbalance above the defined threshold is detected, but the delay for the fault has not yet expired. When the delay expires, a Fault 37 occurs.

Alarm Code	Description	Notes
A38	Ground Fault	This alarm exists while the MX^2 is running and a ground current above the defined threshold is detected, but the delay for the fault has not yet expired. When the delay expires, a Fault 38 occurs.
A47	Stack Over temperature Alarm	This occurs when the stack thermal rises above 105%.
A60	External Alarm on DI 1 Input	This occurs when a digital input is in its fault state but before the fault state has expired.
A61	External Alarm on DI 2 Input	
A62	External Alarm on DI 3 Input	
A71	Analog Input Level Trip Alarm	This alarm exists if the analog input exceeds the defined threshold, but the delay for the fault has not yet expired. When the delay expires, a Fault 71 occurs.

Fault Codes

Fault Code	Description	Controlled Fault Stop	Shunt Trip Fault	Auto-Reset Allowed
F00	No fault	-	-	-
F01	UTS Time Limit Expired	Y	N	Y
F02	Motor Thermal Overload Trip	Y	N	Y
F03	Slow Speed Time Limit Expired	N	N	N
F10	Phase Rotation Error, not ABC	N	N	Y
F11	Phase Rotation Error, not CBA	N	N	Y
F12	Low Line Frequency	N	N	Y
F13	High Line Frequency	N	N	Y
F14	Input power not single phase	N	N	Y
F15	Input power not three phase	N	N	Y
F21	Low Line L1-L2	Y	N	Y
F22	Low Line L2-L3	Y	N	Y
F23	Low Line L3-L1	Y	N	Y
F24	High Line L1-L2	Y	N	Y
F25	High Line L2-L3	Y	N	Y
F26	High Line L3-L1	Y	N	Y
F27	Phase Loss	N	N	Y
F28	No Line	N	N	Y
F30	I.O.C.	N	Y	N
F31	Overcurrent	Y	N	Y
F34	Undercurrent	Y	N	Y
F37	Current Imbalance	Y	N	Y
F38	Ground Fault	N	Y	Y
F39	No Current at Run	N	N	Y
F40	Shorted / Open SCR	N	Y	N
F41	Current at Stop	N	Y	N
F46	Disconnect Fault	N	Y	N
F47	Stack Protection Fault (stack thermal overload)	N	N	Y
F48	Bypass/2M Contactor Fault	Y	N	N
F49	Inline Contactor Fault	Y	N	N
F50	Control Power Low	N	N	Y
F51	Current Sensor Offset Error	N	Y	N
F54	BIST Fault	N	N	N
F55	BIST CT Fault	N	N	N
F60	External Fault on DI 1 Input	N	N	Y
F61	External Fault on DI 2 Input	N	N	Y
F62	External Fault on DI 3 Input	N	N	Y
F71	Analog Input #1 Level Fault Trip	Y	N	Y
F81	Keypad Communication Fault	Y	N	N
F82	Modbus Timeout Fault	Y	N	Y
F94	CPU Error – SW fault	N	N	N
F95	CPU Error – Parameter EEPROM Checksum Fault	N	N	N
F96	CPU Error	N	Y	N
F97	CPU Error - SW Watchdog	N	Y	N
F98	CPU Error	N	N	N
F99	CPU Error – Program EPROM Checksum Fault	N	N	N

Options and Accessories

	Description	Part Number	Size
1)	LCD Display (small)	KPMX3SLCD	H=63mm (2.48"), W=101mm (4")
2)	LCD Display (large)	KPMX3LLCD	H=77mm (3.03"), W=127mm (5")
3)	LCD display cable	RI-100008-00 RI-100009-00	3' or 1 meter 6' or 2 meter
4)	Communication Modules	-consult factory	

Spare Parts

	Description	Part Number	Size	Quantity
1)	LCD Display	small = KPMX3SLCD	H=63mm (2.48"), W=101mm (4")	
		large = KPMX3LLCD	H=77mm (3.03"), W=127mm (5")	
2)	LCD Display Cable	short = RI-100008-00 long = RI-100009-00	3' or 1m 6' or 2m	
3)	Cooling Fans		4" – 6"	
4)	Stack O/T Switch			3
5)	Current Transformer (CTs)	CT288:1 CT864:1 CT2640:1 CT5760:1	288:1 864:1 2640:1 5760:1	
6)	MX^2 card	PC-300055-01-05		
7)	DV/DT Board	PC-300048-01-02		3
8)	Control Power Transformers	VA & Voltage specific		
9)	SCRs	BISCR5016x BISCR10016x BISCR13216x BISCR16116x BISCR25016x		3 / Starter
		BISCR66018x BISCR88018x BISCR150018x		6 / Starter
10)	Contactors	RSC-9-6AC120 RSC-12-6AC120 RSC-18-6AC120 RSC-22-6AC120 RSC-32-6AC120 RSC-40-6AC120 RSC-50-6AC120 RSC-75-6AC120 RSC-85-6AC120 RSC-85/4-6AC-120 RSC-100-4120 RSC-125-4120 RSC-150-4120 RSC-180-4120 RSC-220-4120 RSC-300-4120 RSC-400-4120 RSC-600-4120 RSC-800-4120		

EU Declaration of Conformity

According to the EMC – Directive 89/336/EEC as Amended by 92/31/EEC and 93/68/EEC

Product Category: Motor Controller

Product Type: Reduced Voltage Solid State Motor Controller

Model Number:

RB2-1-S-027A-11C	RB2-1-S-096A-13C	RB2-1-S-240A-15C	RB2-1-S-515A-17C
RB2-1-S-040A-11C	RB2-1-S-125A-14C	RB2-1-S-302A-15C	RB2-1-S-590A-18C
RB2-1-S-052A-12C	RB2-1-S-156A-14C	RB2-1-S-361A-16C	RB2-1-S-720A-19C
RB2-1-S-065A-12C	RB2-1-S-180A-14C	RB2-1-S-414A-17C	RB2-1-S-838A-20C
RB2-1-S-077A-13C	RB2-1-S-180A-15C	RB2-1-S-477A-17C	
RC2-1-S-096A-13C	RC2-1-S-240A-15C	RC2-1-S-515A-17C	
RC2-1-S-125A-14C	RC2-1-S-302A-15C	RC2-1-S-590A-18C	
RC2-1-S-156A-14C	RC2-1-S-361A-16C	RC2-1-S-720A-19C	
RC2-1-S-180A-14C	RC2-1-S-414A-17C	RC2-1-S-838A-20C	
RC2-1-S-180A-15C	RC2-1-S-477A-17C		

Manufacturer's Name: Benshaw, Inc.

Manufacturer's Address: 1659 East Sutter Road
Glenshaw, PA 15116
United States of America

The before mentioned products comply with the following EU directives and Standards:

Safety: UL 508 Standard for Industrial Control Equipment covering devices for starting, stopping, regulating, controlling, or protecting electric motors with ratings of 1500 volts or less.

Electromagnetic Compatibility: EN 50081-2 Emissions Radiated/Conducted
EN 55011/05.98+A1:1999
EN 50082-2 Immunity/Susceptibility which includes:
EN 61000-4-2 Electrostatic Discharge
EN 61000-4-3 Radiated RF
EN 61000-4-4 Electrical Fast Transient/Burst
EN 61000-4-6 Injected Currents

The products referenced above are for the use of control of the speed of AC motors. The use in residential and commercial premises (Class B) requires an optional EMC series filter. Via internal mechanisms and Quality Control, it is verified that these products conform to the requirements of the Directive and applicable standards.

Glenshaw, PA USA - 1 December 2006

Neil Abrams
Quality Control
Manager

Modbus Register Map

Following is the Modbus Register Map. Note that all information may be accessed either through the Input registers (30000 addresses) or through the Holding registers (40000 addresses).

Absolute Register Address	Description	Range	Units
30020/40020	Starter Control	Bit Mask: Bit 0: Run/Stop Bit 1: Fault Reset Bit 2: Emergency Overload Reset Bit 3: Local/Remote Bit 4: Heat Disable Bit 5: Ramp Select Bit 10: Reserved (Relay 6) Bit 11: Reserved (Relay 5) Bit 12: Reserved (Relay 4) Bit 13: Relay 3 Bit 14: Relay 2 Bit 15: Relay 1	-
30021/40021	Starter Status	Bit Mask: Bit 0: Ready Bit 1: Running Bit 2: UTS Bit 3: Alarm Bit 4: Fault Bit 5: Lockout	-
30022/40022	Input Status	Bit Mask: Bit 0: Start Bit 1: DI 1 Bit 2: DI 2 Bit 3: DI 3	-
30023/40023	Alarm Status 1	Bit Mask: Bit 0: “A OL” – Motor overload Bit 1: "A 5" – Reserved (Motor PTC) Bit 2: "A 6" – Reserved (Stator RTD) Bit 3: "A 7" – Reserved (Bearing RTD) Bit 4: "A 8" – Reserved (Other RTD) Bit 5: “A 10” – Phase rotation not ABC Bit 6: “A 11” – Phase rotation not CBA Bit 7: “A 12” – Low Line Frequency Bit 8: “A 13” – High Line Frequency Bit 9: “A 14” – Phase rotation not 1PH Bit 10: “A 15” – Phase rotation not 3PH Bit 11: “A 21” – Low line L1-L2 Bit 12: “A 22” – Low line L2-L3 Bit 13: “A 23” – Low line L3-L1 Bit 14: “A 24” – High line L1-L2 Bit 15: “A 25” – High line L2-L3	-
30024/40024	Alarm Status 2	Bit 0: “A 26” – High line L3-L1 Bit 1: “A 27” – Phase loss Bit 2: “noL” – No line Bit 3: “A 29” – PORT Timeout (reserved) Bit 4: “A 31” – Overcurrent Bit 5: “A 34” – Undercurrent Bit 6: “A 35” – PF Too Leading (reserved) Bit 7: “A 36” – PF Too Lagging (reserved) Bit 8: “A 37” – Current imbalance Bit 9: “A 38” – Ground fault Bit 10: “A 47” – Stack overtemperature Bit 11: “A 53” – Tach Loss (reserved) Bit 12: “A 60” – DI 1 Bit 13: “A 61” – DI 2 Bit 14: “A 62” – DI 3 Bit 15: "A 63"– Reserved (DI 4)	-
30025/40025	Alarm Status 3	Bit 0: "A 64" – Reserved (DI 5) Bit 1: "A 65" – Reserved (DI 6) Bit 2: "A 66" – Reserved (DI 7) Bit 3: "A 67" – Reserved (DI 8) Bit 4: "A 71" – Analog Input #1 Trip	-

Absolute Register Address	Description	Range	Units
30026/40026	Lockout Status	Bit 0: "L OL" – Motor overload Bit 1: – Reserved - (Motor PTC) Bit 2: – Reserved - (RTD Stator) Bit 3: – Reserved - (RTD Bearing) Bit 4: – Reserved - (RTD Other) Bit 5: "L rI" – Run Interlock Bit 6: "L dS" – Disconnect open Bit 7: "L Ot" – Stack overtemperature Bit 8: "L CP" – Control Power Bit 9: Reserved – (RTD Open/Short) Bit 10: Reserved – (Time between starts) Bit 11: Reserved – (Backspin) Bit 12: Reserved – (Starts per hour) Bit 13 Reserved – (RTD Comm Loss)	-
30027/40027	Present Fault Code		
30028/40028	Average Current		A_{rms}
30029/40029	L1 Current		A_{rms}
30030/40030	L2 Current		A_{rms}
30031/40031	L3 Current		A_{rms}
30032/40032	Current Imbalance		0.1 %
30033/40033	Residual Ground Fault Current		% FLA
30034/40034	Reserved		-
30035/40035	Average Voltage		V_{rms}
30036/40036	L1-L2 Voltage		V_{rms}
30037/40037	L2-L3 Voltage		V_{rms}
30038/40038	L3-L1 Voltage		V_{rms}
30039/40039	Motor Overload		%
30040/40040	Power Factor	-99 to +100 (in 16-bit two's compliment signed format)	0.01
30041/40041	Watts (lower 16 bits)	(in 32-bit unsigned integer format)	W
30042/40042	Watts (upper 16 bits)		
30043/40043	VA (lower 16 bits)	(in 32-bit unsigned integer format)	VA
30044/40044	VA (upper 16 bits)		
30045/40045	vars (lower 16 bits)	(in 32-bit two's compliment signed integer format)	var
30046/40046	vars (upper 16 bits)		
30047/40047	kW hours (lower 16 bits)	(in 32-bit unsigned integer format)	kWh
30048/40048	kW hours (upper16 bits)		
30049/40049	Phase Order	0: no line 1: ABC 2: CBA 3: SPH	-
30050/40050	Line Frequency	230 – 720, or 0 if no line	0.1 Hz
30051/40051	Analog Input %	-1000 to +1000 (in 16-bit two's compliment signed format)	0.1 %
30052/40052	Analog Output %	0 – 1000	0.1 %
30053/40053	Running Time	0 – 65535	hours
30054/40054	Running Time	0 – 59	minutes
30055/40055	Starts		-
30056/40056	TruTorque %		%
30057/40057	Power %		%
30058/40058	Peak Starting Current		A_{rms}
30059/40059	Last Starting Duration		0.1 Sec
30101/40101	Motor FLA	1 – 6400	A_{rms}
30102/40102	Motor Service Factor	100 – 199	0.01
30103/40103	Independent Start/Run Motor Overloads	0: Disabled 1: Enabled	-

Absolute Register Address	Description	Range	Units
30104/40104	Motor Overload Running Enable	0: Disabled 1: Enabled	-
30105/40105	Motor Overload Running Class	1 – 40	-
30106/40106	Motor Overload Starting Enable	0: Disabled 1: Enabled	-
30107/40107	Motor Overload Starting Class	1 – 40	
30108/40108	Motor Overload Hot/Cold Ratio	0 – 99	%
30109/40109	Motor Overload Cooling Time	10 – 9999	0.1 Min
30110/40110	Local Source	0: Keypad 1: Terminal 2: Serial	-
30111/40111	Remote Source		
30112/40112	Start Mode	0: Open Loop Voltage Ramp 1: Closed Loop Current Ramp 2: TruTorque Ramp 3: Power Ramp	-
30113/40113	Initial Motor Current 1	50 – 600	% FLA
30114/40114	Maximum Motor Current 1	100 – 800	% FLA
30115/40115	Ramp Time 1	0 – 300	Sec
30116/40116	Initial Motor Current 2	50 – 600	% FLA
30117/40117	Maximum Motor Current 2	100 – 800	% FLA
30118/40118	Ramp Time 2	0 – 300	Sec
30119/40119	UTS Time	1 – 900	Sec
30120/40120	Initial V/T/P	1 – 100	%
30121/40121	Max T/P	10 – 325	%
30122/40122	Stop Mode	0: Coast 1: Voltage Decel 2: TruTorqu Decel 3: DC Brake	-
30123/40123	Decel Begin Level	100 – 1	%
30124/40124	Decel End Level	99 – 1	%
30125/40125	Decel Time	1 – 180	Sec
30126/40126	DC Brake Level	10 – 100	%
30127/40127	DC Brake Time	1 – 180	Sec
30128/40128	DC Brake Delay	1 – 30	100 mSec
30129/40129	Kick Enable 1	0: Disabled 1: Enabled	-
30130/40130	Kick Current Level 1	100 – 800	% FLA
30131/40131	Kick Time 1	1 – 100	100 mSec
30132/40132	Kick Enable 2	0: Disabled 1: Enabled	-
30133/40133	Kick Current Level 2	100 – 800	% FLA
30134/40134	Kick Time 2	1 – 100	100 mSec
30135/40135	Slow Speed Enable	0: Disabled 1: Enabled	-
30136/40136	Slow Speed	0: 7.1 1: 14.3	%
30137/40137	Slow Speed Current Level	10 – 400	% FLA
30138/40138	Slow Speed Time Limit Enable	0: Disabled 1: Enabled	-
30139/40139	Slow Speed Time Limit	1 – 900	Sec
30140/40140	Slow Speed Kick Enable	0: Disabled 1: Enabled	-
30141/40141	Slow Speed Kick Level	100 – 800	% FLA
30142/40142	Slow Speed Kick Time	1 – 100	100 mSec

Absolute Register Address	Description	Range	Units
30143/40143	Rated RMS Voltage	0: 100 1: 110 2: 120 3: 200 4: 208 5: 220 6: 230 7: 240 8: 350 9: 380 10: 400 11: 415 12: 440 13: 460 14: 480 15: 500 16: 525 17: 575 18: 600 19: 660 20: 690 21: 800 22: 1000 23: 1140	Vrms
30144/40144	Input Phase Sensitivity	0: Ins 1: ABC 2: CBA 3: SPH	-
30145/40145	Motor Rated Power Factor	1 – 100	-
30146/40146	Overcurrent Enable	0: Disabled 1: Enabled	-
30147/40147	Overcurrent Level	50 – 800	% FLA
30148/40148	Overcurrent Delay Time Enable	0: Disabled 1: Enabled	-
30149/40149	Overcurrent Delay Time	1 – 900	100 mSec
30150/40150	Undercurrent Trip Enable	0: Disabled 1: Enabled	-
30151/40151	Undercurrent Trip Level	5 – 100	% FLA
30152/40152	Undercurrent Trip Delay Time Enable	0: Disabled 1: Enabled	-
30153/40153	Undercurrent Trip Delay Time	1 – 900	100 mSec
30154/40154	Current Imbalance Trip Enable	0: Disabled 1: Enabled	-
30155/40155	Current Imbalance Trip Level	5 – 40	%
30156/40156	Residual Ground Fault Trip Enable	0: Disabled 1: Enabled	-
30157/40157	Residual Ground Fault Trip Level	5 – 100	% FLA
30158/40158	Over Voltage Trip Enable	0: Disabled 1: Enabled	-
30159/40159	Over Voltage Trip Level	1 – 40	%
30160/40160	Under Voltage Trip Enable	0: Disabled 1: Enabled	-
30161/40161	Under Voltage Trip Level	1 – 40	%
30162/40162	Over/Under Voltage Delay Time	1 – 900	100 mSec
30163/40163	Digital Input Trip Delay Time	1 – 900	100 mSec
30164/40164	Auto Fault Reset Enable	0: Disabled 1: Enabled	-
30165/40165	Auto Fault Reset Delay Time	1 – 900	Sec
30166/40166	Auto Fault Reset Count Enable	0: Disabled 1: Enabled	-
30167/40167	Auto Fault Reset Count	1 – 10	-

Absolute Register Address	Description	Range	Units
30168/40168	Controlled Fault Stop	0: Disabled 1: Enabled	-
30169/40169	DI 1 Configuration	0: Off 1: Stop 2: Fault High 3: Fault Low 4: Fault Reset 5: Disconnect 6: Inline Feedback (F49) 7: Bypass / 2M Feedback (F48) 8: Emergency Motor OL Reset 9: Local / Remote Control Source 10: Heat Disable 11: Heat Enable 12: Ramp Select 13: Slow Speed Forward 14: Slow Speed Reverse 15: DC Brake Disable 16: DC Brake Enable 17: Run Enable 18: Run Disable	-
30170/40170	DI 2 Configuration		
30171/40171	DI 3 Configuration		
30172/40172	R1 Configuration	0: Off 1: Fault Fail Safe 2: Fault Non Fail Safe 3: Running 4: Up To Speed 5: Alarm 6: Ready 7: Locked Out 8: Over Current Alarm 9: Under Current Alarm 10: Overload Alarm 11: Shunt Trip Fail Safe 12: Shunt Trip Non Fail Safe 13: Faulted on Ground Fault 14: In Energy Saver Mode 15: Heating 16: Slow Speed 17: Slow Speed Forward 18: Slow Speed Reverse 19: DC Braking 20: Cooling Fan	-
30173/40173	R2 Configuration		
30174/40174	R3 Configuration		
30175/40175	Analog Input Trip Enable	0: Disabled 1: Enabled	-
30176/40176	Analog Input Trip Type	0: Low – Fault below preset level 1: High – Fault above preset level	-
30177/40177	Analog Input Trip Level	0 – 100	%
30178/40178	Analog Input Trip Delay Time	1 – 900	100 mSec
30179/40179	Analog Input Span	1 – 100	%
30180/40180	Analog Input Offset	0 – 99	%
30181/40181	Analog Output Function	0: Off (no output) 1: 0 – 100% Current 2: 0 – 200% Current 3: 0 – 800% Current 4: 0 – 150% Voltage 5: 0 – 150% Overload 6: 0 – 10kW 7: 0 – 100kW 8: 0 – 1MW 9: 0 – 10MW 10: 1 – 100% Analog Input 11: 0 – 100% Firing 12: Calibration (full output)	-
30182/40182	Analog Output Span	1 – 125	%
30183/40183	Analog Output Offset	0 – 99	%

Absolute Register Address	Description	Range	Units
30184/40184	Inline Enable	0: Disabled 1: Enabled	-
30185/40185	Inline Delay Time	10 – 100	100 mSec
30186/40186	Bypass Feedback Time	1 – 50	100 mSec
30187/40187	Keypad Stop	0: Disabled 1: Enabled	-
30188/40188	Modbus Timeout Enable	0: Disabled 1: Enabled	-
30189/40189	Modbus Timeout	1 – 120	Sec
30190/40190	CT Ratio (x:1)	0: 72:1 1: 96:1 2: 144:1 3: 288:1 4: 864:1 5: 2640:1 6: 3900:1 7 5760:1 8: 8000:1 9: 14400:1 10: 28800:1	-
30191/40191	Auto Start	0: Disabled 1: Start after power applied 2: Start after fault reset 3: Start after power applied and after fault reset	-
30192/40192	Energy Saver Enable	0: Disabled 1: Enabled	-
30193/40193	Heater / Anti-Windmill Enable	0: Disabled 1: Enabled	-
30194/40194	Heater / Anti-Windmill Level	1 – 25	% FLA
30195/40195	Starter Type	0: Normal (Outside Delta) 1: Inside Delta 2: Wye-Delta 3: Phase Controller 4: Current Follower 5: Across the Line (Full Voltage)	-
30196/40196	LED Display Meter	0: Status 1: Ave Current 2: L1 Current 3: L2 Current 4: L3 Current 5: Current Imbalance % 6: Residual Ground Fault 7: Ave. Volts 8: L1-L2 Volts 9: L2-L3 Volts 10: L3-L1 Volts 11: Overload 12: Power Factor 13: Watts 14: VA 15: vars 16: kW hours 17: MW hours 18: Phase Order 19: Line Frequency 20: Analog Input 21: Analog Output 22: Running Days 23: Running Hours 24: Starts 25: TruTorque % 26: Power % 27: Peak Starting Current 28: Last Starting Duration	-

Absolute Register Address	Description	Range	Units
30197/40197	LCD Display Meter 1	1: Ave Current 2: L1 Current 3: L2 Current 4: L3 Current 5: Current Imbalance % 6: Residual Ground Current 7: Ave. Volts 8: L1-L2 Volts 9: L2-L3 Volts 10: L3-L1 Volts 11: Overload 12: Power Factor 13: Watts 14: VA 15: vars 16: kW hours 17: MW hours 18: Phase Order 19: Line Frequency 20: Analog Input 21: Analog Output 22: Running Days 23: Running Hours 24: Starts 25: TruTorque % 26: Power % 27: Peak Starting Current 28: Last Starting Duration	
30198/40198	LCD Display Meter 2		
30199/40199	Misc. Commands	0: None 1: Standard BIST 2: Powered BIST 3: Reset Run Time 4: Reset kWh 5: Enter Reflash Mode 6: Store Parameters 7: Load Parameters 8: Factory Reset	
30200/40200	Bypass Feedback Enable	0: Disabled 1: Enabled	
30601/40601 (most recent) to 30609/40609 (oldest)	Fault Codes	Refer to page 196.	
30611/40611 (most recent) to 30619/40619 (oldest)	System States	0: Initializing 1: Locked Out 2: Faulted 3: Stopped 4: Heating 5: Kicking 6: Ramping 7: Slow Speed 8: Not UTS 9: UTS 10: Phase Control / Current Follower 11: Decelerating 12: Braking 13: Wye 14: PORT 15: BIST 16: Shorted SCR Test 17: Open SCR Test	
30621/40621 (most recent) to 30629/40629 (oldest)	L1 Currents: The current that the load is drawing from Line 1 when the fault has occurred.		Arms
30631/40631 (most recent) to 30639/40639 (oldest)	L2 Currents: The current that the load is drawing from Line 2 when the fault has occurred.		Arms

Absolute Register Address	Description	Range	Units
30641/40641 (most recent) to 30649/40649 (oldest)	L3 Currents: The current that the load is drawing from Line 3 when the fault has occurred.		Arms
30651/40651 (most recent) to 30659/40659 (oldest)	L1-L2 Voltages: The line voltage that is present between lines 1 and 2 when a fault occurs.		Vrms
30661/40661 (most recent) to 30669/40669 (oldest)	L2-L3 Voltages: The line voltage that is present between lines 2 and 3 when a fault occurs.		Vrms
30671/40671 (most recent) to 30679/40679 (oldest)	L3-L1 Voltages: The line voltage that is present between lines 3 and 1 when a fault occurs.		Vrms
30681/40681 (most recent) to 30689/40689 (oldest)	Kilowatts: The power that the load is drawing when a fault occurs.		KW
30691/40691 (most recent) to 30699/40699 (oldest)	Line Periods: The line period (1/frequency) that is present when a fault occurs.		microseconds
30701/40701 (most recent) to 30709/40709 (oldest)	Run Time Hours: The value of the running time meter when a fault occurs.		Hours

Diagnostics

These registers provide some diagnostics capabilities for testing and controlling the communications link.

Absolute Register Address	Description	Range	Units
31201/41201	Parameter Changed Flag	0: Not Changed 1: Changed	-
31202/41202	Modbus Address	1 – 247	-
31203/41203	Baud Rate	0: 1200 1: 2400 2: 4800 3: 9600 4: 19200	bps
31204/41204	Byte Framing	0: 1 Stop Bit, Even Parity 1: 1 Stop Bit, Odd Parity 2: 1 Stop Bit, No Parity 3: 2 Stop Bits, No Parity	-
31205/41205	Modbus Messages Received		-
31206/41206	Scratch		-

The control source must be serial for the starter to be started through Modbus. The Run/Stop bit must transition from 0 to 1 for a start to occur. If the starter stops due to a fault, the action of the starter depends on the state of the AutoStart parameter (P66 – I/O19).

The fault reset bit must transition from 0 to 1 for a fault to be reset.

If any of the programmed digital inputs are programmed as Local/Remote inputs, then the local/Remote bit has no effect.

When the relays are programmed as “Off”, the relay bits may be written in order to control the relays. When the relays are programmed for any function other than “Off” (Fault, Run, UTS for example), then the relay bits may be read to determine the state of the relays.

Starter Status Register:

Bit 0 – Ready	0: Initializing or Faulted and Decelerating or Faulted and Braking or Faulted and Stopped or Lockout 1: Otherwise
Bit 1 – Running	0: Not Running 1: Running
Bit 2 –UTS	0: Not UTS 1: UTS
Bit 3 –Alarm	0: No alarm conditions 1: One or more alarm conditions
Bit 4 –Fault	0: No Fault Condition 1: Fault Condition
Bit 5 –Lockout	0: Start or Fault Reset not locked out. 1: Start or Fault Reset locked out. Possible causes are: Overload Lockout State

Watts, VA, vars, and kW hour Registers:

Meter registers present 32 bit meters in two consecutive 16 bit registers. The least significant 16 bits are in the first register followed by the most significant 16 bits in the second register.

Reading the least significant register latches data into the most significant register so that the data remains synchronized between the two.

Starter Control Register

Bit 0 – Run/Stop	0: Stop 1: Start
Bit 1 – Fault Reset	0: No action 1: Fault Reset
Bit 2 –Emergency Overload Reset	0: No action 1: Emergency Overload Reset
Bit 3 –Local/Remote	0: Local 1: Remote
Bit 4 –Heat Disabled	0: Heater Enabled 1: Heater Disabled
Bit 5 –Ramp Select	0: Ramp 1 1: Ramp 2
Bit 13 – Relay 3	0: Energize(d) 1: De-energize(d)
Bit 14 – Relay 2	Same as above
Bit 15 – Relay 1	Same as above

Parameter Registers

For those parameters that can be set either to "Off", or some value within a range (many of the protection parameters, for example) there are two Modbus registers. One is an "enable" register, and the other sets the value within the range.

Parameter Table

Following is the parameter table for both the LED and LCD Display. The last column is a convenient place to write down parameter settings.

Quick Start Group

LED	LCD	Parameter	Setting Range	Units	Default	Page	Setting
P1	QST 01	Motor FLA	1 – 6400	RMS Amps	10	75	
P2	QST 02	Motor Service Factor	1.00 – 1.99		1.15	75	
P3	QST 03	Motor Running Overload Class	Off, 1 – 40		10	76	
P4	QST 04	Local Source	PAd: Keypad tEr: Terminal SEr: Serial		Terminal	77	
P5	QST 05	Remote Source				78	
P6	QST 06	Initial Motor Current 1	50 – 600	%FLA	100	79	
P7	QST 07	Maximum Motor Current 1	100 – 800	%FLA	600	80	
P8	QST 08	Ramp Time 1	0 – 300	Seconds	15	81	
P9	QST 09	UTS Time / Transition Time	1 – 900	Seconds	20	82	

Control Function Group

LED	LCD	Parameter	Setting Range	Units	Default	Page	Setting
P10	CFN 01	Start Mode	oLrP: Voltage Ramp curr: Current Ramp tt: TT Ramp Pr: Power Ramp		Current Ramp	83	
P8	CFN 02	Ramp Time 1	0 – 300	Seconds	15	81	
P6	CFN 03	Initial Motor Current 1	50 – 600	%FLA	100	79	
P7	CFN 04	Maximum Motor Current 1	100 – 800	%FLA	600	80	
P24	CFN 05	Ramp Time 2	0 – 300	Seconds	15	94	
P22	CFN 06	Initial Motor Current 2	50 – 600	%FLA	100	93	
P23	CFN 07	Maximum Motor Current 2	100 – 800	%FLA	600	93	
P11	CFN 08	Initial Voltage/Torque/Power	1 – 100	%	25	84	
P12	CFN 09	Maximum Torque/Power	10 – 325	%	105	85	
P13	CFN 10	Kick Level 1	Off, 100 – 800	%FLA	Off	86	
P14	CFN 11	Kick Time 1	0.1 – 10.0	Seconds	1.0	86	
P25	CFN 12	Kick Level 2	Off, 100 – 800	%FLA	Off	94	
P26	CFN 13	Kick Time 2	0.1 – 10.0	Seconds	1.0	94	
P15	CFN 14	Stop Mode	CoS: Coast SdcL: Volt Decel TdcL: TT Decel dcb: DC Braking		Coast	87	
P16	CFN 15	Decel Begin Level	100 – 1	%	40	88	
P17	CFN 16	Decel End Level	99 – 1	%	20	89	
P18	CFN 17	Decel Time	1 – 180	Seconds	15	90	
P19	CFN 18	DC Brake Level	10 – 100	%	25	91	
P20	CFN 19	DC Brake Time	1-180	Seconds	5	92	
P21	CFN 20	DC Brake Delay	0.1-3.0	Seconds	0.2	93	
P27	CFN 21	Slow Speed	Off, 7.1, 14.3	%	Off	95	
P28	CFN 22	Slow Speed Current Level	10-400	% FLA	100	95	
P29	CFN 23	Slow Speed Timer	Off, 1-900	Seconds	10	96	
P30	CFN 24	Slow Speed Kick Level	Off, 100-800	% FLA	Off	96	
P31	CFN 25	Slow Speed Kick Time	0.1-10.0	Seconds	1.0	97	

Protection Function Group

LED	LCD	Parameter	Setting Range	Units	Default	Page	Setting
P32	PFN 01	Over Current Level	Off, 50 – 800	% FLA	Off	98	
P33	PFN 02	Over Current Trip Delay Time	Off, 0.1 – 90.0	Seconds	0.1	99	
P34	PFN 03	Under Current Trip Level	Off, 5 – 100	% FLA	Off	100	
P35	PFN 04	Under Current Trip Delay Time	Off, 0.1 – 90.0	Seconds	0.1	100	
P36	PFN 05	Current Imbalance Trip Level	Off, 5 – 40	%	15	101	
P37	PFN 06	Residual Ground Fault Trip Level	Off, 5 – 100	%FLA	Off	102	
P38	PFN 07	Over Voltage Trip Level	Off, 1 – 40	%	Off	103	
P39	PFN 08	Under Voltage Trip Level	Off, 1 – 40	%	Off	103	
P40	PFN 09	Over/Under Voltage Trip Delay Time	0.1 – 90.0	Seconds	0.1	104	
P41	PFN 10	Auto Fault Reset Time	Off, 1 – 900	Seconds	Off	104	
P42	PFN 11	Auto Reset Count Limit	Off, 1-10		Off	104	
P43	PFN 12	Controlled Fault Stop	Off, On		On	105	
P44	PFN 13	Independent Starting/Running Overload	Off, On		Off	106	
P45	PFN 14	Motor Overload Class Starting	Off, 1 – 40		10	107	
See P3	PFN 15	Motor Overload Class Running	Off, 1 – 40		10	76	
P46	PFN 16	Motor Overload Hot/Cold Ratio	0 – 99	%	60	108	
P47	PFN 17	Motor Overload Cooling Time	1.0 – 999.9	Minutes	30.0	109	

I/O Group

LED	LCD	Parameter	Setting Range	Units	Default	Page	Setting
P48	I/O 01	DI 1 Configuration	OFF: Off StOP: Stop FH: Fault High FL: Fault Low Fr: Fault Reset diSc: Disconnect InLn: Inline Cnfrm byP: Bypass Cnfrm EoLr: E OL Reset L-r: Local/Remote hdIS: Heat Disable hEn: Heat Enable rSEL Ramp Select SS F: Slow Speed Forward SS r: Slow Speed Reverse BdIS: DC Brake Disable BEn : DC Brake Enable runE: Run Enable rund: Run Disable		Stop	110	
P49	I/O 02	DI 2 Configuration			Off		
P50	I/O 03	DI 3 Configuration			Off		
P51	I/O 04	Digital Fault Input Trip Time	0.1-90.0	Seconds	0.1	111	

LED	LCD	Parameter	Setting Range	Units	Default	Page	Setting
P52	I/O 05	R1 Configuration	OFF: Off FLFS: Fault (fail safe) FLnF: Fault (non fail safe) run: Running utS: UTS AL: Alarm rdyr: Ready LOC: Locked Out OC: Over Current UC: Under Current OLA: OL Alarm ShFS: Shunt Trip (fail safe) ShnF: Shunt Trip (non fail safe) GfLt: Ground Fault ES: Energy Saver HEAt: Heating SSpd: Slow Speed SS F: Slow Speed Forward SS r: Slow Speed Reverse dcb: DC Braking FAn: Cooling Fan		Fault FS	112	
P53	I/O 06	R2 Configuration			Off		
P54	I/O 07	R3 Configuration			Off		
P55	I/O 08	Analog Input Trip Type	OFF: Disabled Lo: Low Level Hi: High Level		Off	113	
P56	I/O 09	Analog Input Trip Level	0 – 100	%	50	114	
P57	I/O 10	Analog Input Trip Time	0.1 – 90.0	Seconds	0.1	114	
P58	I/O 11	Analog Input Span	1 – 100	%	100	115	
P59	I/O 12	Analog Input Offset	0 – 99	%	0	116	
P60	I/O 13	Analog Output Function	0: OFF (no output) 1: 0 – 100% Curr 2: 0 – 200% Curr 3: 0 – 800% Curr 4: 0 – 150% Volt 5: 0 – 150% OL 6: 0 – 10 kW 7: 0 – 100 kW 8: 0 – 1 MW 9: 0 – 10 MW 10: 0 – 100% Ain 11: 0 – 100% Firing 12: Calibration		Off	116	
P61	I/O 14	Analog Output Span	1 – 125	%	100	117	
P62	I/O 15	Analog Output Offset	0 – 99	%	0	117	
P63	I/O 16	Inline Configuration	Off, 1.0 – 10.0	Seconds	3.0	118	
P64	I/O 17	Bypass Feedback Time	Off, 0.1 – 5.0	Seconds	2.0	118	
P65	I/O 18	Keypad Stop Disable	Enabled, Disabled		Enabled	119	
P66	I/O 19	Power on Start Selection	0: Disabled 1: Start after Power applied only 2: Start after Fault reset only 3: Start after power applied and after fault reset.		Disabled	119	

Function Group

LED	LCD	Parameter	Setting Range	Units	Default	Page	Setting
P79	FUN 01	Meter 1	0: Status 1: Ave Current 2: L1 Current 3: L2 Current 4: L3 Current 5: Curr Imbal 6: Residual Ground Fault 7: Ave Volts 8: L1-L2 Volts 9: L2-L3 Volts 10: L3-L1 Volts 11: Overload 12: Power Factor 13: Watts 14: VA 15: vars 16: kW hours 17: MW hours 18: Phase Order 19: Line Freq 20: Analog Input 21: Analog Output 22: Run Days 23: Run Hours 24: Starts 25: TruTorque % 26: Power % 27: Peak Starting Current 28: Last Starting Duration		Ave Current	127	
	FUN 02	Meter 2			Ave Volts	127	
P78	FUN 03	CT Ratio	72:1, 96:1,144:1, 288:1, 864:1, 2640:1, 3900:1, 5760:1, 8000:1, 14400:1, 28800:1		288	126	
P77	FUN 04	Input Phase Sensitivity	InS Insensitive AbC ABC CbA CBA SPH Single Phase		Insens.	126	
P76	FUN 05	Rated RMS Voltage	100, 110, 120, 200, 208, 220, 230, 240, 350, 380, 400, 415, 440, 460, 480, 500, 525, 575, 600, 660, 690, 800, 1000, 1140,	RMS Voltage	480	125	
P75	FUN 06	Motor Rated Power Factor	-0.01 (Lag) – 1.00 (Unity)		-0.92	125	
P74	FUN 07	Starter Type	nor: Normal Id: Inside Delta y-d: Wye-Delta / Other Electro mechanical PctL: Phase Control cFol: Current Follower AtL: Full Voltage ATL		Normal	124	
P73	FUN 08	Heater Level	Off, 1 – 40	%FLA	Off	123	
P72	FUN 09	Energy Saver	Off, On		Off	122	
P70	FUN 10	Communication Address	1 – 247		1	121	
P69	FUN 11	Communication Baud Rate	1200 2400 4800 9600 19200	bps	19200	121	
P68	FUN 12	Communication Timeout	Off, 1 – 120	Seconds	Off	121	

LED	LCD	Parameter	Setting Range	Units	Default	Page	Setting
P71	FUN 13	Communication Byte Framing	0: Even Parity, 1 Stop bit 1: Odd Parity, 1 Stop bit 2: No Parity, 1 Stop bit 3: No Parity, 2 Stop bits		Even Parity, 1 Stop bit	122	
P80	FUN 14	Software Version 1	Display Only			128	
P67	FUN 15	Miscellaneous Commands	0: None 1: Std. BIST 2: Powered BIST 3: Reset Run Time 4: Reset KWh/MWh 5: Enter Reflash mode 6: Store Parameters 7: Load Parameters 8: Factory Reset		None	120	
P81	FUN 16	Passcode			Off	129	

LCD Fault Group

Group	Fault Number	Fault Description	Starter State	I1	I2	I3	V1	V2	V3	kW	Hz	Run Time
FL1												
FL2												
FL3												
FL4												
FL5												
FL6												
FL7												
FL8												
FL9												

LED Fault Group

Group	Fault Number	Fault Description	Fault Number	Fault Description
F1			F6	
F2			F7	
F3			F8	
F4			F9	
F5				

Publication History;

Revision	Date	ECO#
00	12/15/06	Initial Release
01	09/10/07	
02	08/21/08	Revisions based on shared review

CURTISS WRIGHT
Flow Control Company
BENSHAW

BENSHAW
615 Alpha Drive
Pittsburgh, PA 15238
Phone: (412) 968-0100
Fax: (412) 968-5415

BENSHAW Canada
550 Bright Street
Listowel, Ontario N4W 3W3
Phone: (519) 291-5112
Fax: (519) 291-2595

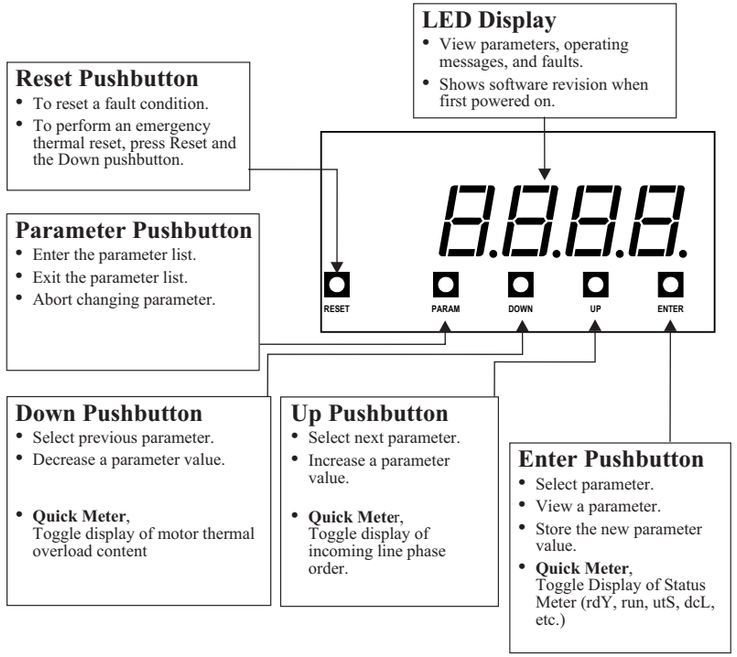

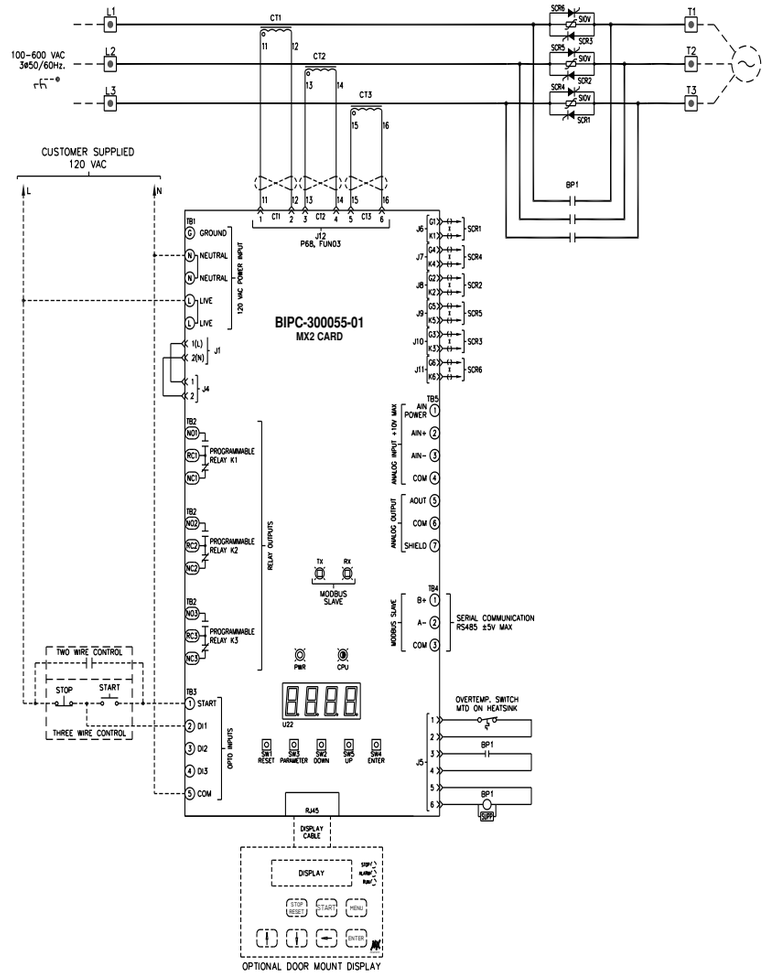

Changing Parameter Values

Parameter change mode can be entered by:

- At the default meter display, press the [PARAM] key to enter parameter mode.
- Use the [UP] and [DOWN] keys to scroll through the available parameters.
- The value of the parameter can be viewed by pressing the [ENTER] key.
- When viewing the parameter value, the parameter can be changed by using the [UP] and [DOWN] keys.
- To store the new value, press the [ENTER] key. When the [ENTER] key is pressed the value is saved and the display goes back to parameter # "P_".

To exit parameter change mode without saving the new parameter value either:

- Press the [PARAM] key to return to the parameter number display.
- Wait 60 seconds and the display returns to the default meter display.

Emergency Overload Reset

To perform an emergency overload reset, press [RESET] and [DOWN]. This sets the motor thermal overload content to 0.

Resetting a Fault

To reset from a fault condition, press [RESET].

Restoring Factory Parameter Settings

LED Display: To restore ALL parameters to the factory default settings, press and hold the [PARAM] and [ENTER] pushbutton switches on power up. The display blinks "dFLt".

LCD Display: To restore ALL parameters to the factory default settings, go to Miscellaneous commands FUN15 and press [ENTER]. Press [UP] until you read "Factory Rst" and press [ENTER].

⌘ NOTE: Parameters unique to the motor starter applications need to be set again to appropriate values before motor operation.

Digital Input "DI 1 – 3" Configuration

P48 I/O 01	DI 1 Configuration	OFF:	Off	L-r:	Local/Remote
		StOP:	Stop	hdIS:	Heat Disable
		FH:	Fault High	hEn:	Heat Enable
P49 I/O 02	DI 2 Configuration	FL:	Fault Low	rSEL:	Ramp Select
		Fr:	Fault Reset	SS F:	Slow Spd Fwd
		dSc:	Disconnect	SS R:	Slow Spd Rev
P50 I/O 03	DI 3 Configuration	InLn:	Inline Cnfrm	BdIS:	Brake Disabl
		byP:	Bypass Cnfrm	BEn:	Brake Enable
		EoLr:	E OL Reset		

Relay Output "R1 – 3" Configuration

P52 I/O 05	R1 Configuration SPDT form C 5 Amp, 125VAC, resistive 3 Amp, 250VAC, resistive 1250VA res, 500VA ind	OFF:	Off	ShFS:	Shunt FS
		FLFs:	Fault FS	shnF:	Shunt NSF
		FLnF:	Fault NFS	gFLt:	Ground Fault
		run:	Running	ES:	Energy Saver
		utS:	UTS	HEAt:	Heating
P53 I/O 06	R2 Configuration -Same as R1	AL:	Alarm	SSPd:	Slow Spd
		rdyr:	Ready	SSF:	Slow Spd Fwd
		LOC:	Locked Out	SSr:	Slow Spd Rev
		OC:	Overcurrent	dcb:	Braking
		UC:	Undercurrent	FAn:	Cool Fan Ctl
P54 I/O 07	R3 Configuration SPDT form C 16 Amp, 240VAC resistive 16 Amp, 30VDC, resistive 1HP, 240VAC Make/Break VA-4000/400	OLA:	OL Alarm		

Model Number

RB2-1-S-052A-12C

- C = Open Chassis
- Frame Size
- Amp Rating, (0 - 999A)
- Fault Level
  - S = Standard
  - H = High
- Type of Bypass
  - 0 = None (only available with RC)
  - 1 = Integrated
  - 2 = Separate, Definite Purpose (Only with 1000V Starter)
  - 3 = Separate, ATL IEC AC3 Rated
  - 4 = Separate, ATL NEMA Rated (AC4)
- Type of Control
  - 2 = MX^2
  - 3 = MX^3
- Family of RediStart Starter
  - B = Bypass
  - C = Continuous

Operating Messages (see user manual for any additional Operating Messages)

noL	No Line	AbC	Phase order meter showing ABC
rdY	Ready	CbA	Phase order meter showing CBA
Acc	Accelerating or Kicking	SPH	Phase order meter showing Single Phase
Acc2	Accelerating or Kicking with ramp 2	oxxx	xxx = overload content
utS	Up to Speed	P xx	xx = Parameter code
run	Run - Done with Accel ramp but not yet Up to Speed	A xx	xx = Alarm code. If the condition persists, a fault occurs
dcL	Decelerating Motor	F xx	xx = Fault code
A OL	Overload Alarm - The motor overload level is between 90% and 100%	ioc	Instantaneous Over current
F OL	Overload Fault - The motor overload level has reached 100%	dFLt	Default – Flashes when parameter defaults are loaded
		HEAt	Heater/Anti-windmill Mode
L OL	Overload Lockout - A start is not allowed until the motor overload level cools below 15%	ES	Energy Saver
		FLSH	In reflash mode
L CP	Control Power Lockout - A start is not allowed because the control power is too low	Pro8	In reflash mode, programming
		rEAd	In reflash mode, verifying
LOC	Lock out State	donE	In reflash mode, complete
SSPd	Slow Speed Motor Operation	L dS	Disconnect Switch Open
L Ot	Power Stack Over Temperature Lockout	dcb	DC Injection Brake Active
SS r	Slow Speed Reverse	SS F	Slow Speed Forward

Operating Parameters

Parameter		Description	Default	Units
LED	LCD			
P1	**QST 01**	**Motor Full Load Amps**	**10**	**RMS Amps**
P2	**QST 02**	**Motor Service Factor**	**1.15**	
P3	**QST 03**	**Motor Running Overload Class**	**10**	
P4	**QST 04**	**Local Source**	**tEr**	
P5	**QST 05**	**Remote Source**		
P6	**QST 06**	**Initial Motor Current 1**	**100**	**%FLA**
P7	**QST 07**	**Maximum Motor Current 1**	**600**	**%FLA**
P8	**QST 08**	**Ramp Time 1**	**15**	**Seconds**
P9	**QST 09**	**Up To Speed Time**	**20**	**Seconds**
P10	CFN 01	Start Mode	curr	
P11	CFN 08	Initial Voltage/Torque/Power	25	%
P12	CFN 09	Maximum Torque/Power	105	%
P13	CFN 10	Kick Level 1	Off	%FLA
P14	CFN 11	Kick Time 1	1.0	Seconds
P15	CFN 14	Stop Mode	Cos	
P16	CFN 15	Decel Begin Level	40	%
P17	CFN 16	Decel End Level	20	%
P18	CFN 17	Decel Time	15	Seconds
P19	CFN 18	DC Brake Level	25	%
P20	CFN 19	DC Brake Time	5	Seconds
P21	CFN 20	DC Brake Delay	0.2	Seconds
P22	CFN 06	Initial Motor Current 2	100	%FLA
P23	CFN 07	Maximum Motor Current 2	600	%FLA
P24	CFN 05	Ramp Time 2	15	Seconds
P25	CFN 12	Kick Level 2	Off	%FLA
P26	CFN 13	Kick Time 2	1.0	Seconds
P27	CFN 21	Slow Speed	Off	%
P28	CFN 22	Slow Speed Current Level	100	%FLA
P29	CFN 23	Slow Speed Time Limit	10	Seconds
P30	CFN 24	Slow Speed Kick Level	Off	%FLA
P31	CFN 25	Slow Speed Kick Time	1.0	Seconds
P32	PFN 01	Over Current Trip Level	Off	%FLA
P33	PFN 02	Over Current Trip Time	0.1	Seconds
P34	PFN 03	Under Current Trip Level	Off	%FLA
P35	PFN 04	Under Current Trip Time	0.1	Seconds
P36	PFN 05	Current Imbalance Trip Level	15	%
P37	PFN 06	Residual Ground Fault Trip Level	Off	%FLA
P38	PFN 07	Over Voltage Trip Level	Off	%
P39	PFN 08	Under Voltage Trip Level	Off	%
P40	PFN 09	Over/Under Voltage Trip Time	0.1	Seconds
P41	PFN 10	Auto Reset Time	Off	Seconds

*NOTE: See MX^2 User Manual for the complete parameter descriptions.
*NOTE: Parameters in bold print are the most commonly used in initial start up.

Operating Parameters (Continued)

Parameter		Description	Default	Units
LED	LCD			
P42	PFN 11	Auto Reset Count	Off	Off, 1 - 10
P43	PFN 12	Controlled Fault Stop Enable	On	
P44	PFN 13	Independent Starting/Running Overload	Off	
P45	PFN 14	Motor Starting Overload Class	10	
P46	PFN 16	Motor Overload Hot/Cold Ratio	60	%
P47	PFN 17	Motor Overload Cooling Time	30	Minutes
P48	I/O 01	DI 1 Configuration	Stop	
P49	I/O 02	DI 2 Configuration	Off	
P50	I/O 03	DI 3 Configuration	Off	
P51	I/O 04	Digital Fault Input Trip Time	0.1	Seconds
P52	I/O 05	R1 Configuration	FLFS	
P53	I/O 06	R2 Configuration	Off	
P54	I/O 07	R3 Configuration	Off	
P55	I/O 08	Analog Input Trip Type	Off	
P56	I/O 09	Analog Input Trip Level	50	%
P57	I/O 10	Analog Input Trip Time	0.1	Seconds
P58	I/O 11	Analog Input Span	100	%
P59	I/O 12	Analog Input Offset	0	%
P60	I/O 13	Analog Output Function	0: Off	
P61	I/O 14	Analog Output Span	100	%
P62	I/O 15	Analog Output Offset	0	%
P63	I/O 16	Inline Configuration	3.0	Seconds
P64	I/O 17	Bypass Feedback Time	2.0	Seconds
P65	I/O 18	Keypad Stop Disable	Enabled	
P66	I/O 19	Power On Start Selection	0	
P67	FUN 15	Miscellaneous Commands	0	
P68	FUN 12	Communication Timeout	Off	Seconds
P69	FUN 11	Communication Baud Rate	19200	bps
P70	FUN 10	Communication Address	1	
P71	FUN 13	Communication Byte Framing	0	
P72	FUN 09	Energy Saver	Off	
P73	FUN 08	Heater Level	Off	%FLA
P74	FUN 07	Starter Type	nor	
P75	FUN 06	Rated Power Factor	-0.92	
P76	**FUN 05**	**Rated Voltage**	**480**	**RMS Volt.**
P77	FUN 04	Phase Order	InS	
P78	**FUN 03**	**CT Ratio**	**288:1**	
P79	FUN 01	Meter 1	Ave Current	
n/a	FUN 02	Meter 2	Ave Volts	
P80	FUN 14	Software 1 Part Number	810023-01-00	
P81	FUN 16	Passcode	Off	
P82	FL1-9	Fault Log		

*NOTE: See MX^2 Instruction Manual for the complete parameter descriptions.
*NOTE: Parameters in bold print are the most commonly used in initial start up.

Publication # 890034-04-00

BENSHAW
ADVANCED CONTROLS & DRIVES

MX^2 Control
Quickstart Reference Guide
For The Integral LED/LCD Display

For more information consult the
RediStart MX^2 User Manual
(RB2,RC2 & RX2E Models)

December 2006
Software Version: 810023-01-02
Hardware Version: 300055-01-04

USA Headquarters: (412) 487-8235
USA West: (480) 905-0601
Canada: (519) 291-5112
Website: http://www.benshaw.com
Email: support@benshaw.com

THE BENSHAW PROMISE 3 Year Warranty

INTRODUCTION

This chapter contains information pertaining to spare parts, service assistance, and service parts. Appendix A is the Spare Parts List specifically prepared for the purchased compressor. Appendix B, if applicable, provides figures with number designations pertaining to normal maintenance and capital parts.

FS-Elliott offers a wide range of operator and maintenance training programs. The training can be performed at a FS-Elliott facility or conducted at your location. FS-Elliott offers a variety of standard, self-contained packages. Programs can also be customized to suit specific needs.

For assistance in organizing a training program, please call 1-724-387-3200 or email info@fs-elliott.com.

FIELD SERVICE ASSISTANCE

The local FS-Elliott distributor is trained and authorized to meet your service needs. Service contracts and parts are available through the local FS-Elliott distributor. Field Service Representatives are available to oversee the installation and start-up or any phase of maintenance of FS-Elliott equipment. Also, field service engineers are available to conduct Performance Analysis and other related equipment evaluations. For the nearest authorized sales or service local distributor or representative, contact any FS-Elliott office or visit our web site at www.fs-elliott.com.

By Phone:
+1 (724) 387-3200 – Main (M-F 8:00am-4:30pm EST)
+1 (724) 989-6051 – 24 Hour Emergency Hotline

By Mail:
FS-Elliott Co., LLC
5710 Mellon Road
Export, PA 15632
United States of America

By E-Mail:
info@fs-elliott.com – General Questions
parts@fs-elliott.com – Service Parts

SPARE PARTS LIST – APPENDIX A

The quantities shown on the Spare Parts List are for one compressor. A reduction in inventory may be considered where duplicate compressors are involved or parts are interchangeable with other compressors.

The Spare Parts List contained in this chapter provides part numbers and descriptions that can be used for the ordering of normal spare parts and replacement parts. Stocking these parts enable prompt equipment maintenance or emergency repairs that could otherwise cause lengthy shutdowns.

Caution

Replacement parts should be purchased from FS-Elliott. Many of the vendor parts have been modified and/or calibrated by FS-Elliott for compatibility with the design. Parts that are purchased directly from vendors may not function and could damage other components. The use of parts not purchased from FS-Elliott may result in voiding the equipment warranty.

Ordering

When ordering parts or when contacting the local FS-Elliott distributor concerning parts, always give the following information:

1. The equipment serial number/factory order number including the dash number if there are multiple units for the same order. These numbers are available on the equipment nameplates which are mounted on the airend, in the control panel, and on the Technical Manual Record. (Examples: C711602 or B5EH2E227-1)
2. Provide the Part Number from the Spare Parts List.
3. Part name or description and quantity required.
4. Name and address of purchaser.
5. Complete shipping address and shipping instructions.
6. Specify payment terms.

Storage

Spare parts usually represent a substantial investment. To protect this investment, the following must be observed.

1. Inspect the parts and coat any unprotected machined surfaces with a rust preventative.
2. Tag or mark the parts so they can be easily located and identified.
3. Store the parts in a clean, dry place.

4. Neatly store small parts on shelves or in bins to prevent damage. Store large parts on skids, in crates, or on vertical racks.

5. Inspect the parts frequently. Clean and recoat parts with a rust preventative, if necessary.

6. Periodically check the shelf life expiration dates on parts such as o-rings. The boxes will be marked accordingly with an expiration date, if applicable.

7. Spare rotor assemblies are shipped to site with VERSIL PAK cloth covering the entire assembly. (Versil Pak cloth is a #3-2 Grade C grease-proofed, waterproofed, flexible, acid free, non-corrosive, moldable self-adherent cloth). Rotor assemblies should remain wrapped and be stored in a controlled climate area with low humidity. Rotor storage containers are available for long term storage or storage in harsh environments. Please contact your local FS-Elliott Sales & Service Office for a quote.

Returning Parts to the Factory

If it becomes necessary to return parts to the factory, contact the local FS-Elliott distributor and proper material accountability will be provided. FS-Elliott reserves the right to levee a restocking fee or reject the return of an item. The customer is responsible for return shipping costs.

FIGURES (if applicable) – APPENDIX B

This appendix contains figures that relate to the normal maintenance parts list (Appendix A). The figures provide a cross reference that can be used for ordering normal spare parts and replacement parts. Stocking these parts enable prompt compressor maintenance or emergency repairs that could otherwise cause lengthy shutdowns. If Figure 9-0 is referenced in the NMPL, a cross-reference drawing is not available.

NOTES

APPENDIX A

NORMAL MAINTENANCE PARTS LIST

FS-Elliott Co., LLC
FS-Elliott Parts Operations
Export, PA 15632-8948

SMART Modular Technologies
User: SMART Modular Technologies
Location: Brazil

Frame: P300 Model: P300-250
Shop Order: B6ET2E081

ITEM	FIG. NO.	ITEM NO.	CATALOG NUMBER		REQ'D PER UNIT	PRICE EACH
			CURRENT	PREVIOUS		
Normal Maintenance Spares						
OIL MIST ELIMINATOR FILTER	9-1	3	P3515A958		1	
OIL FILTER ELEMENTS (SPARE)	9-1	1	P3516C160-3		1	
INLET AIR FILTER PRIMARY ELEMENT	9-1	2	LP1068-1		2	
INLET AIR FILTER SECONDARY ELEMENT	9-1	2	LP1069-1		2	
SILASTIC SEALING COMPOUND	9-0	1	X-598-010		1	
O-RING SEAL HOUSING	9-4	13	P700D042		6	
DISCHARGE MUFFLER	9-3	1	TP3238-1		1	
Normal Spares						
LOW PRESSURE INTERCOOLER BUNDLE GASKET PKG	9-5	1	PP0576-GR1		1	
LOW PRESSURE INTERCOOLER HEAD GASKET	9-5	3	JP0495-1		1	
HIGH PRESSURE INTERCOOLER BUNDLE GASKET PACKAGE	9-5	1	PP0576-GR1		1	
HIGH PRESSURE INTERCOOLER HEAD GASKET	9-5	3	JP0495-1		1	
AFTERCOOLER BUNDLE GASKET PACKAGE	9-5	2	PP0577-GR1		1	
AFTERCOOLER HEAD GASKET	9-5	4	JP0496-1		1	
OIL COOLER GASKET PACKAGE	9-3	6	QP0475-500		1	
BULLGEAR JOURNAL BEARING	9-4	1	DP1087-6		2	
BULL GEAR BEARINGS SHIM PACK	9-0	13	280002-GR1		1	
BULLGEAR SHAFT OIL SEAL (WHOLE)	9-4	2	JP0648-50		1	
BULLGEAR SHAFT OIL SEAL O-RING	9-4	3	P700D232		1	
1ST STAGE PINION BEARING	9-4	19	DP0822-1		1	
2ND STAGE PINION BEARING	9-4	4	BP0567-1		1	
3RD STAGE PINION BEARING	9-4	5	BP0568-1		1	
FREE-END PINION BEARING	9-4	5	BP0568-1		1	
PINION BEARING SHIM PACK (PRIMARY)	9-4	6	CP0007-GR1		4	
PINION BEARING SHIM PACK (SECONDARY)	9-4	7	CP0008-GR1		4	
1ST STAGE CARBON SEAL ASSEMBLY	9-4	8	FP0559-8		1	
2ND AND 3RD STAGE CARBON SEAL ASSEMBLY	9-4	8	FP0559-8		2	
1ST STAGE CARBON SEAL REPAIR KIT	9-4	9	EP1144-GR1		1	
2ND AND 3RD STAGE CARBON SEAL REPAIR KIT	9-4	9	EP1144-GR1		2	
1ST STAGE DIFFUSER O-RING	9-4	10	P99R182		1	
2ND STAGE DIFFUSER O-RING	9-4	11	P99R181		1	
3RD STAGE DIFFUSER O-RING	9-4	12	P99R180		1	
GEARCASE SPLITLINE O-RING	9-0	4	G496-030		10	
SPLITLINE O-RING GROOVE	9-0	9	G496-030		4	
INTERSTAGE PIPE COUPLING GASKET (3 INCH)	9-3	2	P2320C803		1	
INTERSTAGE PIPE COUPLING GASKET (4 INCH)	9-3	3	P2320C805		1	
INTERSTAGE PIPE COUPLING GASKET (5 INCH)	9-2	1	P2320C073		1	
INTERSTAGE PIPE COUPLING GASKET ASSEMBLY (5 INCH)	9-2	1	NP0490-10		2	
INTERSTAGE PIPE COUPLING SPLIT GASKET (5 INCH)	9-2	1	NP0490-20		2	
Capital Spares						
LOW PRESSURE INTERCOOLER TUBE BUNDLE	9-2	4	PP0576-70		1	
HIGH PRESSURE INTERCOOLER TUBE BUNDLE	9-1	6	PP0576-70		1	
AFTERCOOLER TUBE BUNDLE	9-1	7	PP0577-70		1	
INLET GUIDE VALVE	9-1	6	TP0430-1		1	

APPENDIX A

NORMAL MAINTENANCE PARTS LIST

FS-Elliott Co., LLC
FS-Elliott Parts Operations
Export, PA 15632-8948

SMART Modular Technologies
User: SMART Modular Technologies
Location: Brazil

Frame: P300 Model: P300-250
Shop Order: B6ET2E081

ITEM	FIG. NO.	ITEM NO.	CATALOG NUMBER		REQ'D PER UNIT	PRICE EACH
			CURRENT	PREVIOUS		
OIL HEATER AND LOLS	9-1	7	251484-19		1	
AUXILIARY OIL PUMP	9-1	4	KP0801-4		1	
AUXILIARY OIL PUMP REPAIR KIT	9-1	5	P7210T1025-GR1		1	
OIL COOLER TUBE BUNDLE	9-3	4	QP0475-1		1	
UNLOADING CONTROL VALVE	9-2	6	PP1689-2		1	
DISCHARGE CHECK VALVE (SPARE)	9-1	8	RP0447-4		1	
INTERCOOLER DRAIN VALVE (V-NOTCH)	9-1	12	P61E047		2	
PULSAR INTERCOOLER DRAIN VALVE (ZERO-LOSS)	9-0	14	NOT REQUIRED		0	
INTERCOOLER DRAIN VALVE ANNUAL REPLACEMENT KIT	9-0	15	NOT REQUIRED		0	
AFTERCOOLER DRAIN VALVE (V-NOTCH)	9-1	4	P61E047		1	
PULSAR AFTERCOOLER DRAIN VALVE (ZERO-LOSS)	9-0	14	NOT REQUIRED		0	
AFTERCOOLER DRAIN VALVE ANNUAL REPLACEMENT KIT	9-0	15	NOT REQUIRED		0	
CONDENSATE DRAIN MUFFLER (SPARE)	9-0	5	NOT REQUIRED		0	
MAIN OIL PUMP	9-2	2	P7210T1030		1	
MAIN OIL PUMP REPAIR KIT	9-2	3	P7210T1030-GR1		1	
MAIN OIL PUMP COUPLING	9-4	14	P2320J114		1	
THERMOSTATIC MIXING VALVE	9-1	9	P9100T125		1	
THERMOSTATIC MIXING VALVE SERVICE KIT	9-1	10	P9100T115-1		1	
THERMOSTATIC MIXING VALVE ELEMENT ASSEMBLY	9-1	11	P9100T115-2		1	
COUPLING REPLACEMENT SLEEVE	9-3	5	GP0210-50		1	
OIL REGULATING VALVE	9-0	10	280018-1		1	
Control Panel Spares						
VIBRATION TRANSMITTER (LVT, HVT)	9-6	1	KP1955-1		1	
VIBRATION CABLE (LVT, HVT)	9-6	2	P7964A4608-00		1	
VIBRATION PROBE (LVT, HVT)	9-6	3	P7964A4641-00		1	
PRESSURE TRANSMITTER (FDT, SDT)	9-6	4	P8650A522		1	
PRESSURE TRANSMITTER (OPT)	9-6	5	P8650A522		1	
PRESSURE TRANSMITTER (DPT, SPT)	9-6	6	P8650A521		1	
MOTOR AMP TRANSMITTER (MAT)	9-6	7	P8651A122		1	
CONTROL RELAY (CR1)	9-6	8a	P7480G7		1	
CONTROL RELAY (CR2,CR4,CR 5)	9-6	8b	NP1874-1		1	
CONTROL RELAY (CR3)	9-6	8c	MP1171-1		1	
OPERATOR PANEL (9” R1000)	9-0	6	RP2504-3		1	
POWER SUPPLY (48 VDC)	9-0	19	P90A106		1	
ANALOG INPUT MODULE	9-6	15	P90ES235		1	
TEMPERATURE RTD ASSEMBLY (IAT) 3-STG	9-0	7	UP1149-30		1	
TEMPERATURE RTD ASSEMBLY (IAT) 2-STG	9-0	7	UP1149-30		1	
TEMPERATURE RTD ASSEMBLY (IOT)	9-0	8	UP1149-20		1	
SEAL AIR PRESSURE SWITCH	9-6	14	P8650A5403		1	
I/P TRANSDUCER, 6-30 PSIG – (UVT, IVT) IF SUPPLIED INSIDE CONTROL PANEL	9-0	20	P8651A311		1	
I/P TRANSDUCER, 3-15 PSIG – (IGV) IF SUPPLIED INSIDE CONTROL PANEL	9-0	21	P8651A301		1	
AIR FILTER DELTA P TRANSMITTER (OPTIONAL)	9-0	22	P8335D685		1	
OIL FILTER DELTA P TRANSMITTER (OPTIONAL)	9-0	23	P8335E180		1	
HORN	9-6	13	P8650A65		1	

General Information

The Normal Maintenance Parts List (NMPL) provides a list of recommended parts. The list includes wearing parts recommended for startup and two years operation. As a convenience, the rotor assembly is also listed on the NMPL.

Quantities shown on the NMPL are for one particular machine. Where duplicate machines are involved, or parts interchangeable with other machines, a reduction in inventory may be considered. In making such an evaluation, it is recommended that consideration be given to the consequence of a major plant malfunction, such as loss of power or water.

Column Descriptions

ITEM: Provides a noun description of the part.

FIG. NO.: Figure number from unit's Technical Manual.

ITEM NO.: Identifies the referenced assembly drawing line item number for the part, or figure, in unit's Technical Manual.

CATALOG NUMBER, CURRENT: Number to be used when ordering parts. This is the most current number and may be different than that shown on the assembly drawing.

CATALOG NUMBER, PREVIOUS: Changes in part numbers from the assembly drawing parts list or previous NMPLs will be different than that shown on the assembly drawing.

REQ'D PER UNIT: Identifies the recommended minimum number of parts to have on hand at startup. When the unit has more than one of the same assembly (e.g., ISO Carbon Seals), these assemblies will only be listed once and the number listed in this column will support all assemblies for the unit.

PRICE EACH: This information will be provided when requested by the customer. Prices are valid for 30 days from the date the list is printed. The print date is identified at the end of the list.

INTRODUCTION

The Technical Manual figures and part numbers that are shown in the list are generic numbers that are cross-referenced to FS-Elliott internal part numbers. Spare and replacement parts supplied by FS-Elliott have the potential of being changed to parts of equal or greater quality from those originally supplied on the unit.

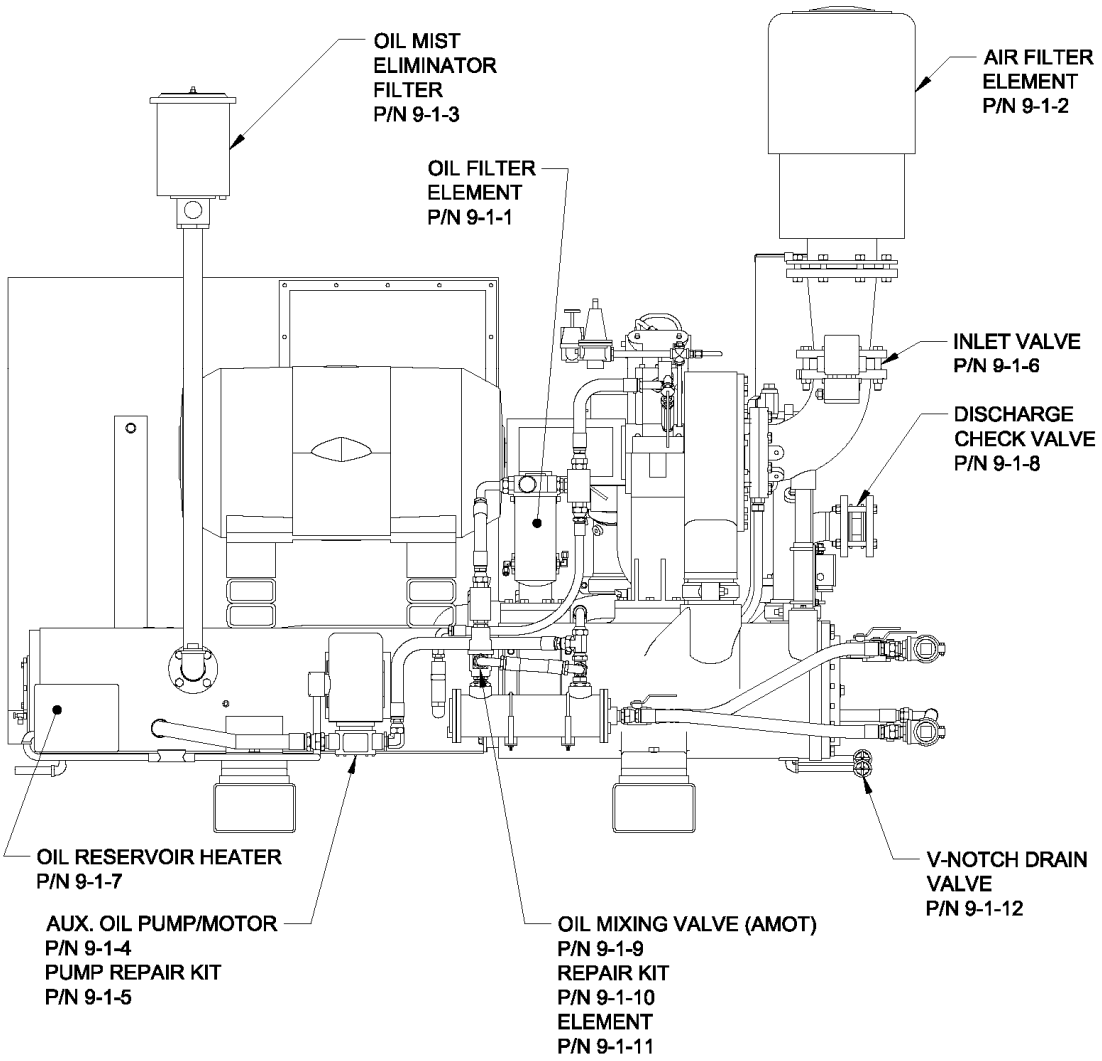

FIGURE 9-1
COMPRESSOR BACKSIDE VIEW

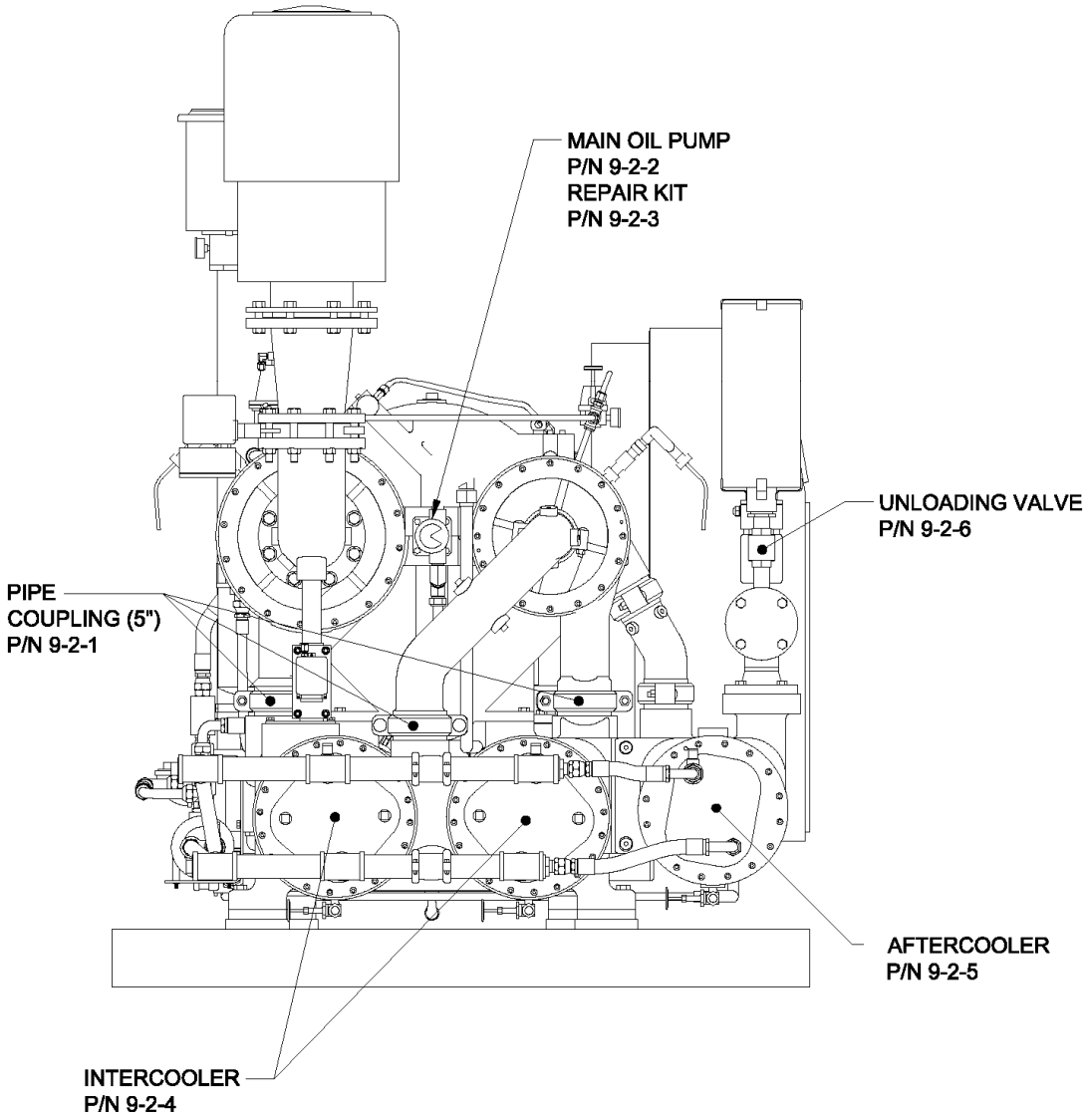

FIGURE 9-2
COMPRESSOR FRONT VIEW

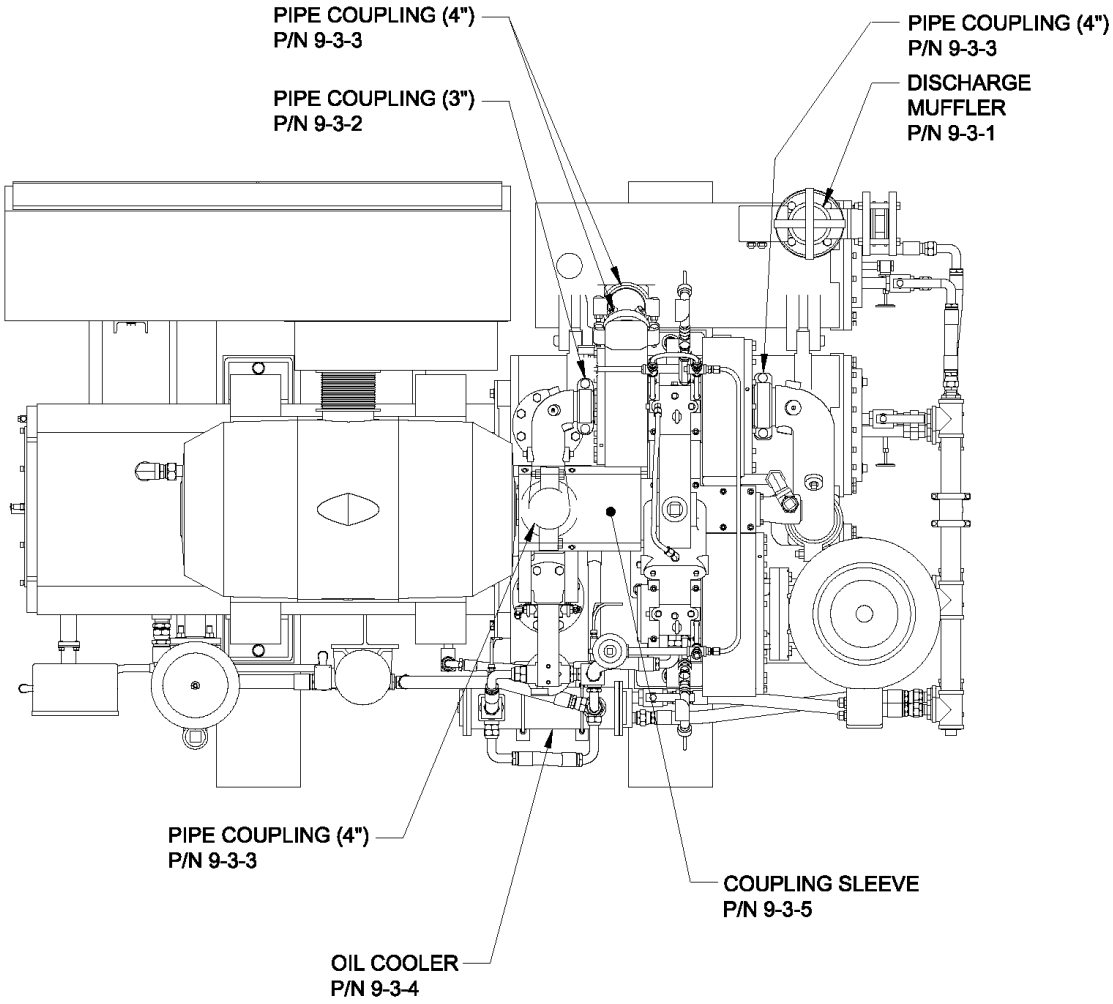

FIGURE 9-3
COMPRESSOR TOP VIEW

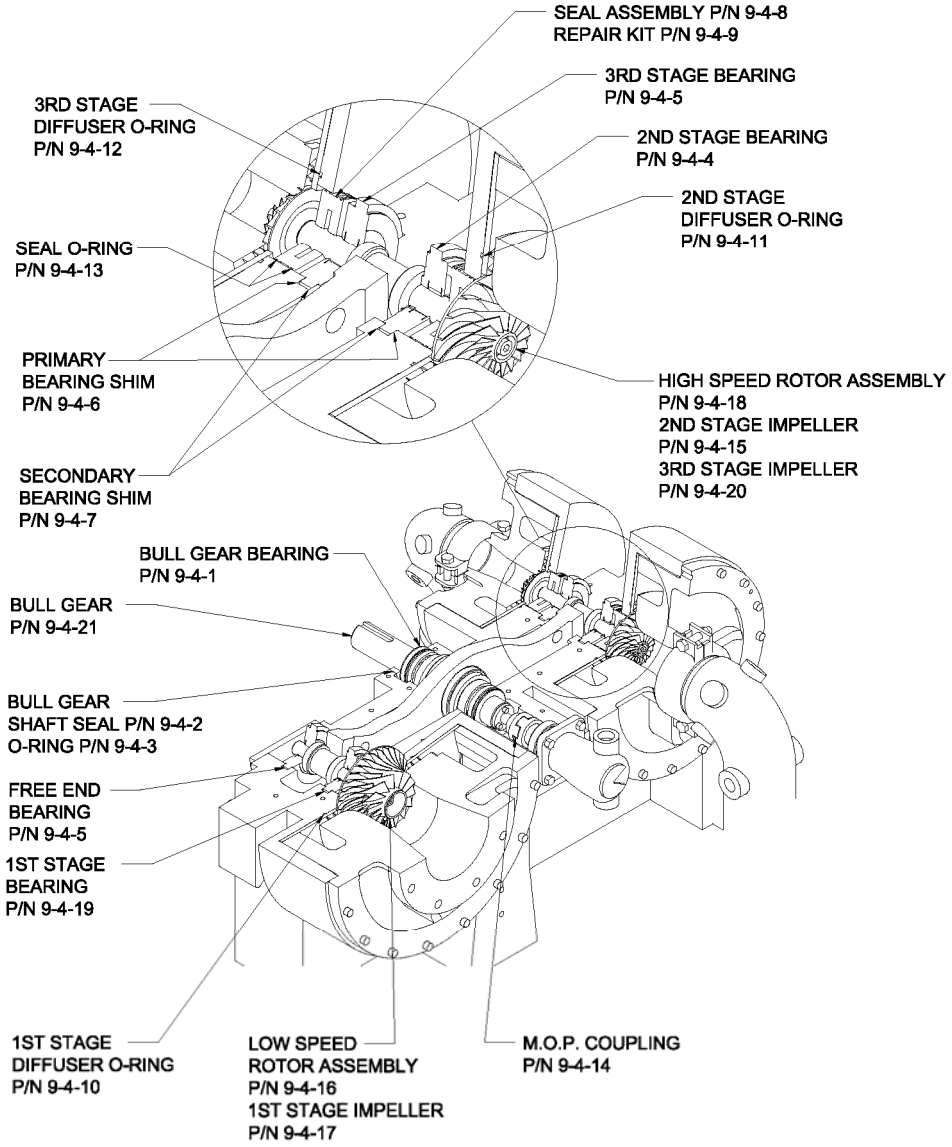

FIGURE 9-4
AIR HEAD COMPONENTS

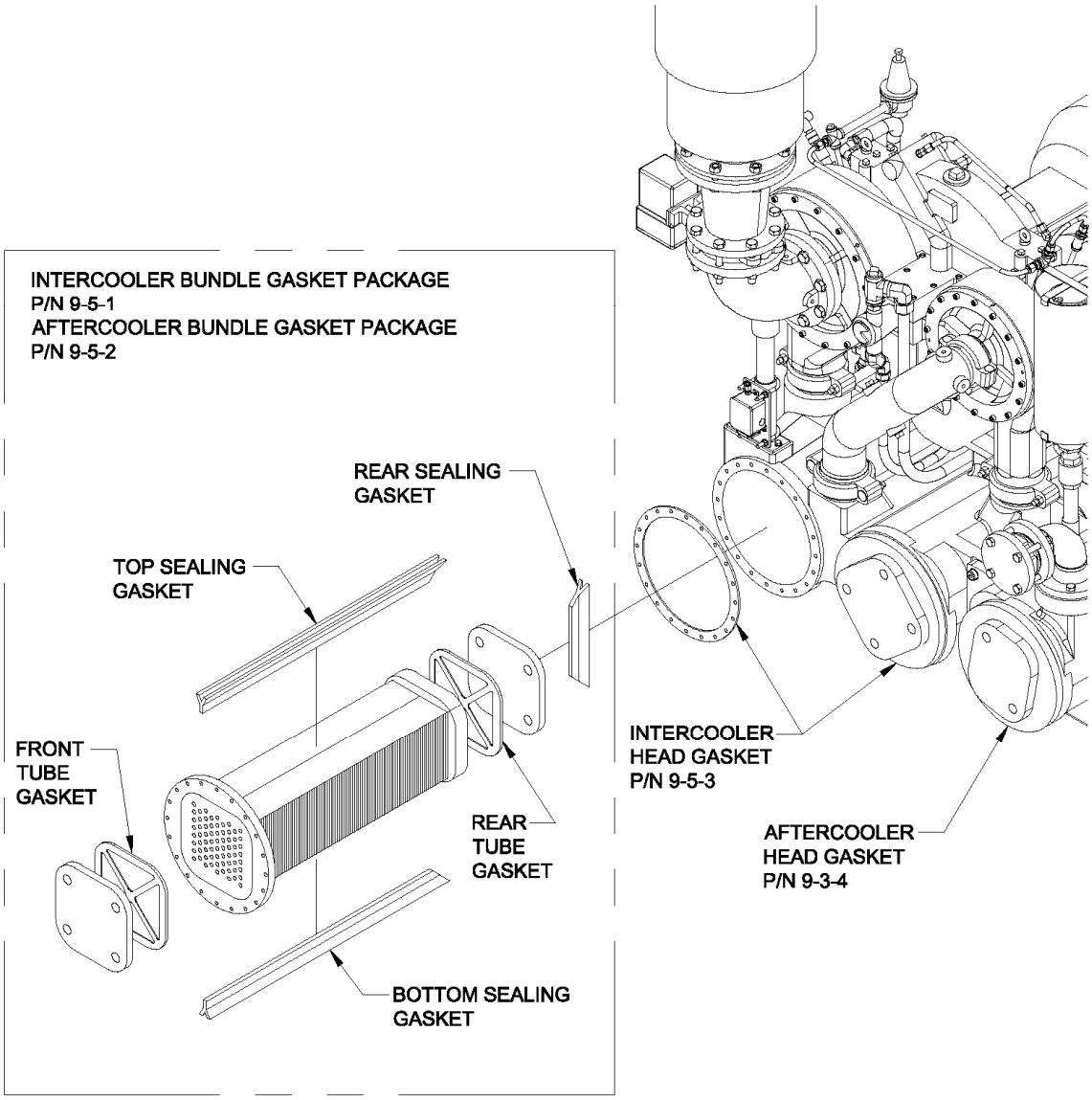

FIGURE 9-5
INTERCOOLERS AND AFTERCOOLERS

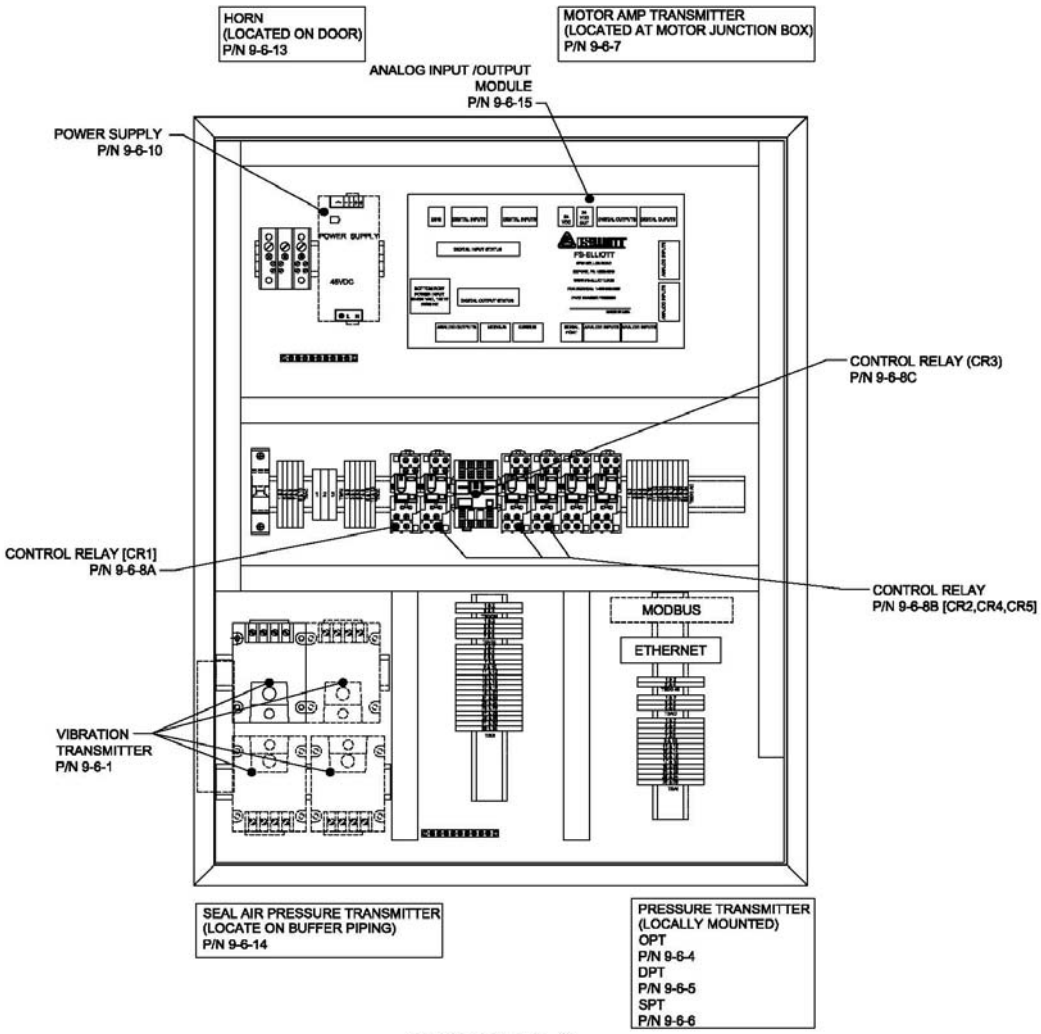

FIGURE 9-6
R1000
CONTROL PANEL

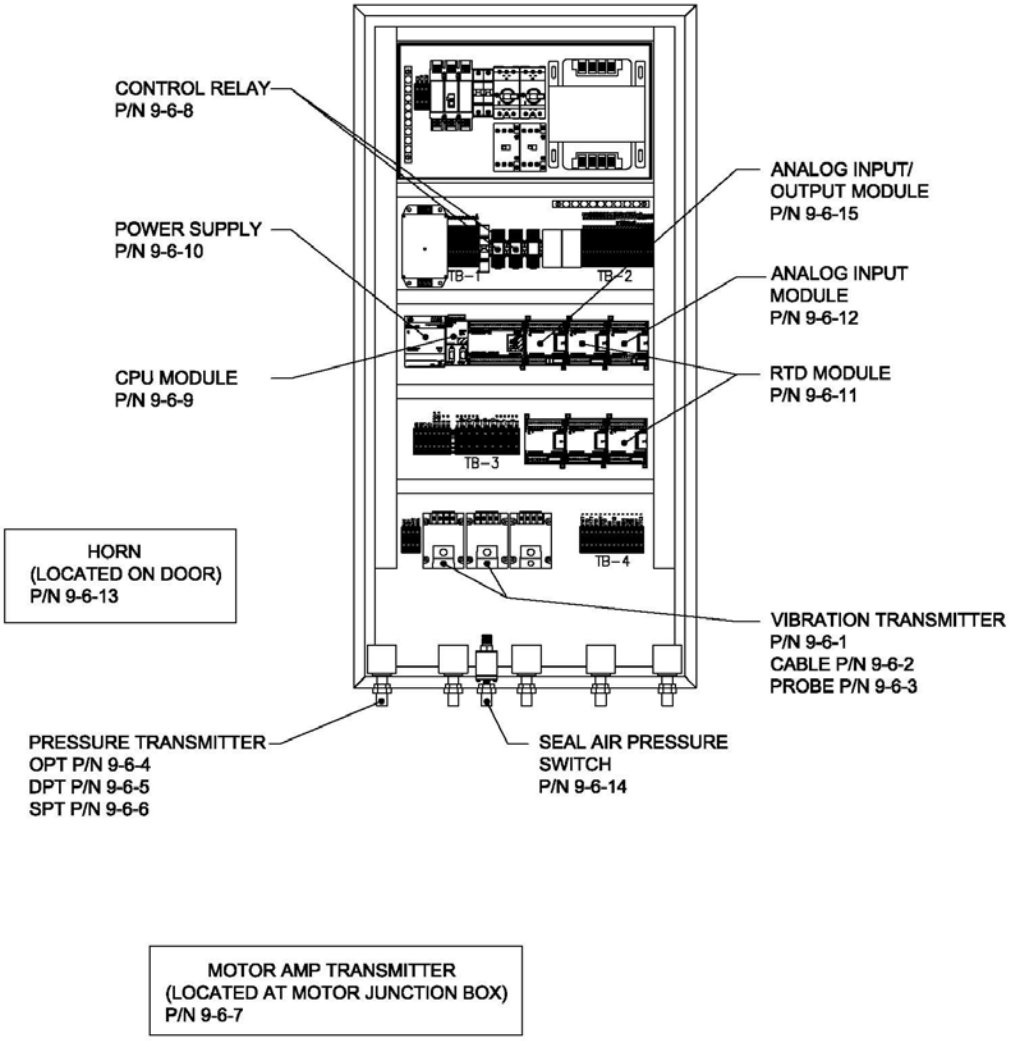

POLARIS 300 -R150 PANEL
FIG 9-6

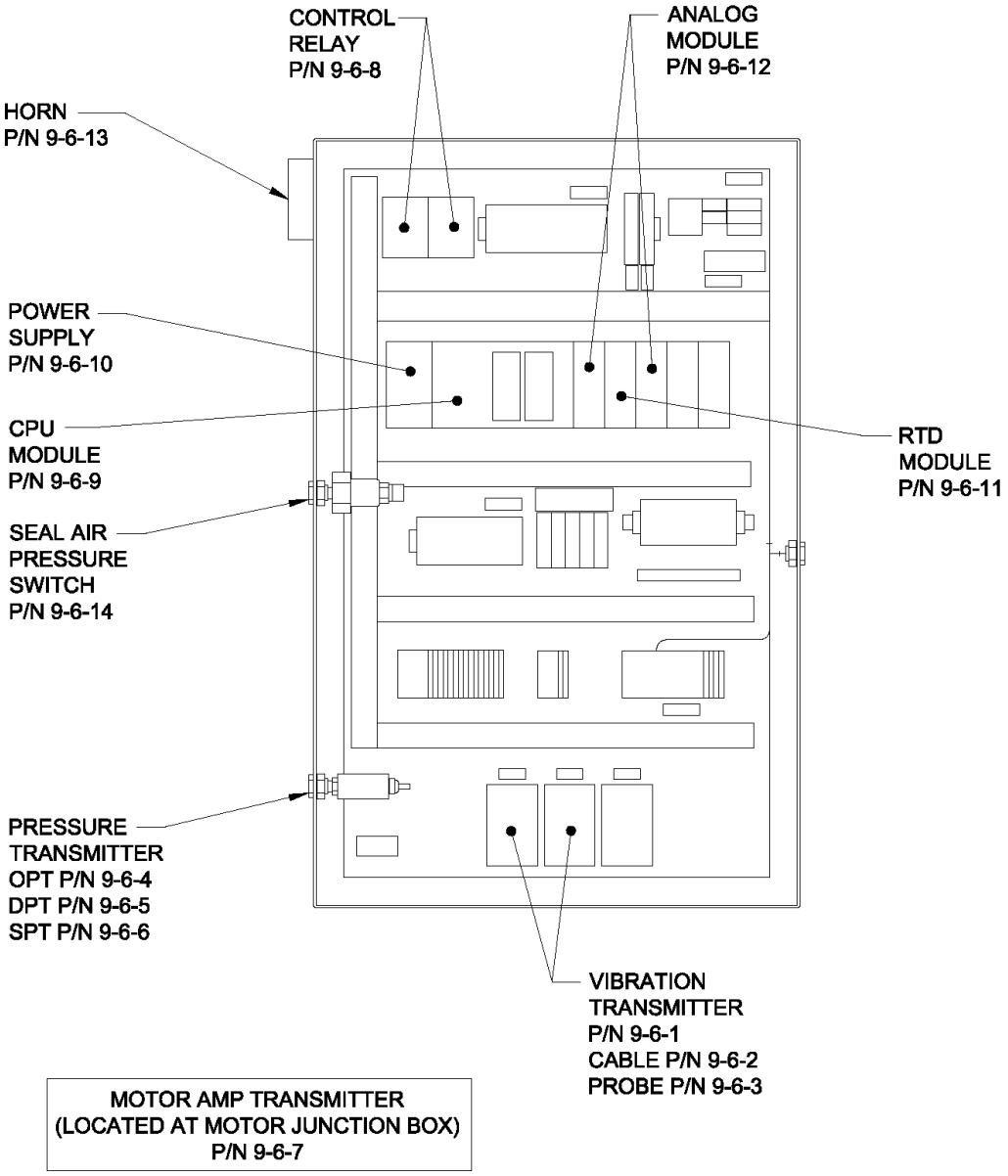

FIGURE 9-6
R200 CONTROL PANEL

INTRODUCTION

This chapter contains engineered drawings specific for the purchased equipment. The drawing numbers may have a suffix number, or group number identifying the applicable assembly on the drawing. Be sure to use the suffix listed when making reference to a drawings.

If this manual is in an electronic format (CD-ROM), scroll down for a list of Technical Drawings.

NOMENCLATURE AND USE OF ASSEMBLY DRAWINGS

The following description will help you understand the format of the FS-Elliott drawings:

1. The title block in the lower right-hand corner identifies the drawing by name and number. It may also contain additional information describing the drawing. The drawing number is a six-digit number or a six-position alpha numeric drawing number.

2. The numbers in the quantity column specify the quantities of items used on that drawing.

3. The part name column lists the item nomenclature.

4. The part number column will list either a part number with a letter ‘P’ prefix, or a six position drawing number and may include a dash (-) suffix number. These numbers are part or catalog numbers used for ordering spare or replacement parts.

5. The drawing may also have a column or section listing group numbers (GROUP 1, 2, etc. or -GR. 1, 2, etc.). These group numbers define lists of related parts used for specific variations of parts arrangements and/or assemblies.

6. A change description column is located on the left side of the drawing. Any changes, revisions, additions or deletions are recorded here, and dated.

NOTES

TECHNICAL DRAWINGS

FACTORY ORDER: B6ET2E081

DRAWING NUMBER	TITLE	REVISION NUMBER
SP1351	**Connection Diagram**	**16**
TP1663	**Unit Outline**	**1**
TP2246	**P&I Diagram**	**0A**

XC-SP1351

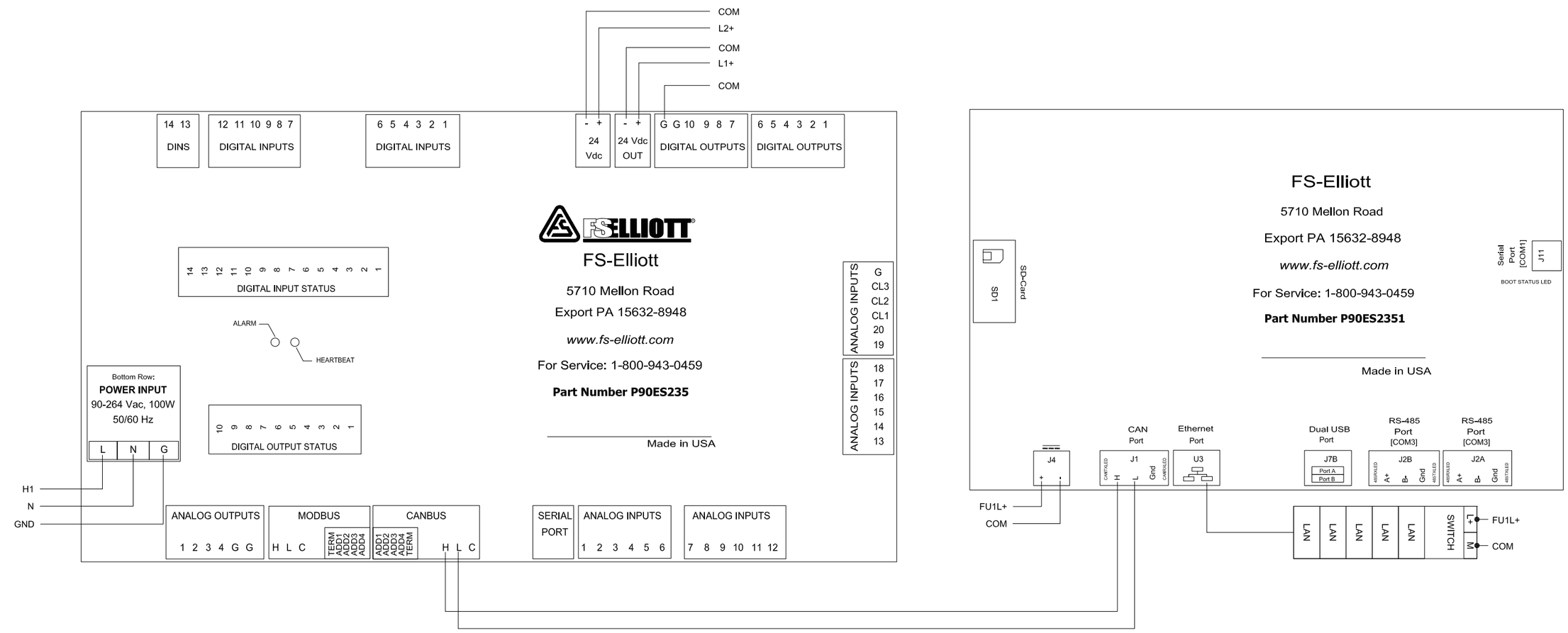

	CHANGE DESCRIPTION
1	GENERAL REVISION MCGREGOR 10/16/13
2	AS BUILT MCGREGOR 10/31/13
3	SEE SHEET 5 MCGREGOR 12/30/13
4	SEE SHEET 3 MCGREGOR 1/31/14
5	REVISE SIGNAL GROUNDS, ADD SH 6 MCGREGOR 5/1/14
6	NO CHANGES THIS SHEET MCGREGOR 10/2/14
7	SEE ECN14-593 MCGREGOR 12/16/14
8	SEE ECN15-37 MCGREGOR 1/22/15
9	SEE ECN15-196 N.DERRINGER 4/16/2015
10	SEE ECN15-400 M.SEIBEL 8/13/15
11	SEE ECN15-466 M.SEIBEL 9/29/15
12	SEE ECN15-470 M.SEIBEL 10/5/15
13	SEE ECN15-483 M.SEIBEL 10/13/15
14	SEE ECN15-497 M.SEIBEL 10/21/15
15	SEE ECN15-507 M.SEIBEL 10/21/15
16	SEE ECN16-10 M.J.BRILL 1/15/16

DR. MCGREGOR	R1000 CONTROL PANEL
CK. M.P.ZOWACKI	FS-ELLIOTT CONTROLLER LAYOUT
DES.AP. M.P.ZOWACKI	
ENG.AP. E.KLIMEK	
MFG.AP. N / R	
CAST.AP. N / R	
DATE 7/12/13	
S.O. D1120OM10	
SCALE N.T.S.	
SIMILAR TO	
PROCESS SPEC	
ASSOCIATE PLANT IDENTIFICATION	
SHEET 1 OF 12	

THE CONTENTS OF THIS DOCUMENT ARE THE EXCLUSIVE PROPERTY OF FS-ELLIOTT CO., LLC AND CONTAIN CONFIDENTIAL AND PROPRIETARY INFORMATION AND MAY NOT BE USED, DISTRIBUTED OR DUPLICATED WITHOUT THE PRIOR WRITTEN CONSENT OF FS-ELLIOTT CO., LLC. THIS INFORMATION IS PROVIDED SUBJECT TO THE EXPRESS CONDITION THAT IT SHALL NOT BE USED, DISTRIBUTED OR DUPLICATED, IN WHOLE OR IN PART, OR USED FOR THE BENEFIT OF ANYONE OTHER THAN FS-ELLIOTT CO., LLC. FS-ELLIOTT CO., LLC HEREBY RESERVES ANY AND ALL RIGHTS AVAILABLE TO IT UNDER ANY AND ALL APPLICABLE LAWS, INCLUDING BUT NOT LIMITED TO, THOSE RIGHTS INCLUDED IN ANY CONFIDENTIALITY AGREEMENT BETWEEN THE RECIPIENT OF THIS INFORMATION AND FS-ELLIOTT CO., LLC.

© 2015 FS-ELLIOTT COMPANY, LLC.

AUTOCAD GENERATED DRAWING

XC- SP1351

REV 16

SUPERSEDED BY

SUPERSEDES

XC-SP1351

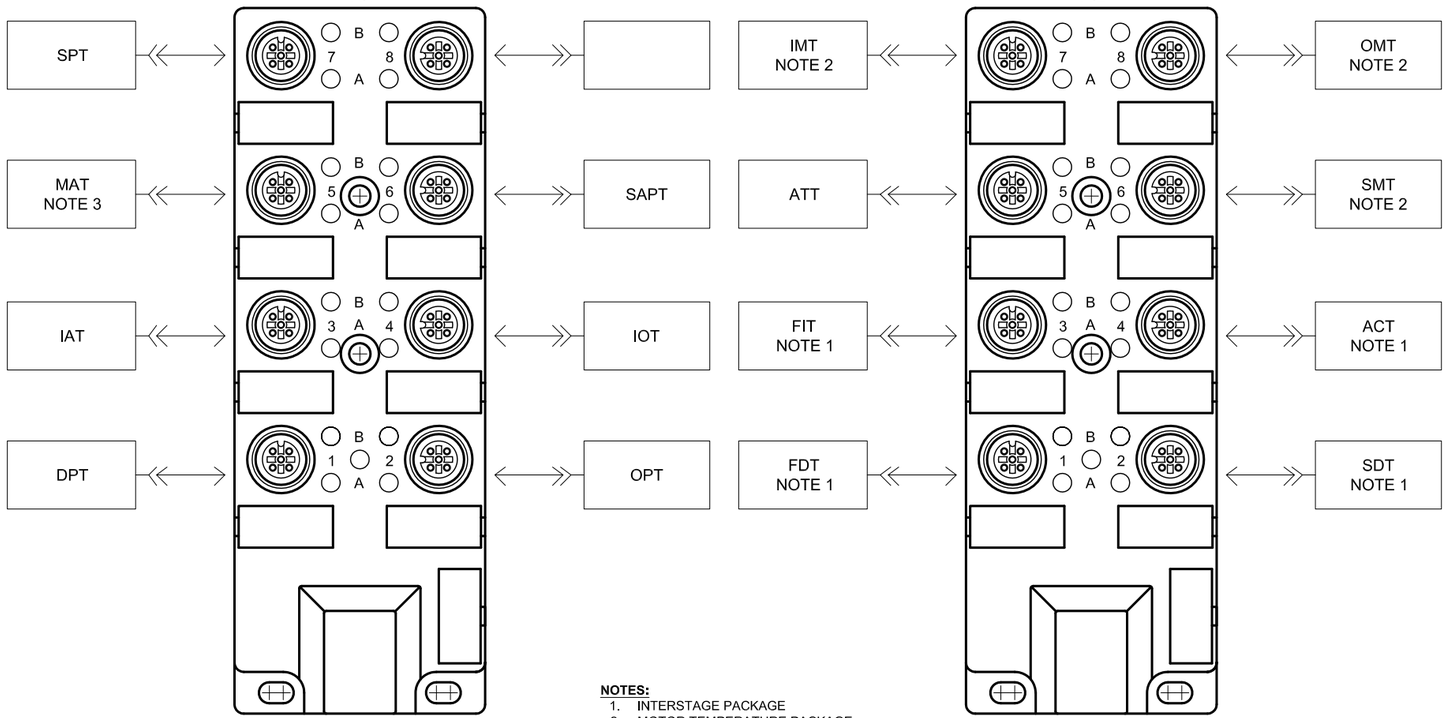

NOTES:
1. INTERSTAGE PACKAGE
2. MOTOR TEMPERATURE PACKAGE
3. SEE SHEET 9 FOR CONNECTION

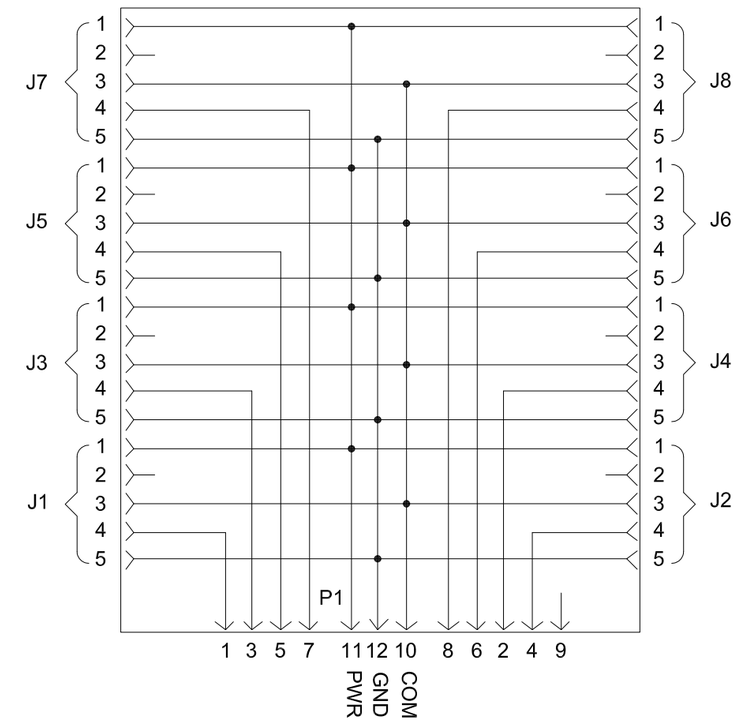

PANEL BULKHEAD CONNECTIONS	
1	WHITE
2	GREEN
3	YELLOW
4	GRAY
5	PINK
6	RED
7	BLACK
8	VIOLET
9	N/C
10	BLUE
11	BROWN
12	GREEN/YELLOW

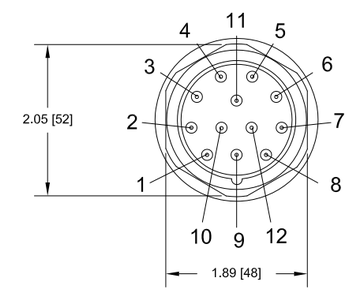

PANEL BULKHEAD
FEMALE CONNECTOR

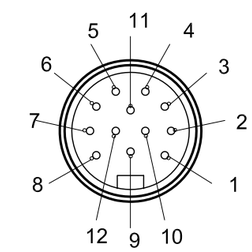

CONNECTION BLOCK
MALE CABLE END
(P1)

△	CHANGE DESCRIPTION
1	GENERAL REVISION MCGREGOR 10/16/13
2	AS BUILT MCGREGOR 10/31/13
3	SEE SHEET 5 MCGREGOR 12/30/13
4	SEE SHEET 3 MCGREGOR 1/31/14
5	REVISE PATCH CABLE WIRING MCGREGOR 5/1/14
6	NO CHANGES THIS SHEET MCGREGOR 10/2/14
7	SEE ECN14-593 MCGREGOR 12/16/14
8	SEE ECN15-37 MCGREGOR 1/22/15
9	SEE ECN15-196 N.DERKINGER 4/16/2015
10	SEE ECN15-400 M.SEIBEL 8/13/15
11	SEE ECN15-466 M.SEIBEL 9/29/15
12	SEE ECN15-470 M.SEIBEL 10/5/15
13	SEE ECN15-483 M.SEIBEL 10/13/15
14	SEE ECN15-497 M.SEIBEL 10/21/15
15	SEE ECN15-507 M.SEIBEL 10/21/15
16	SEE ECN16-10 M.J.BRILL 1/15/16

DR. MCGREGOR
CK. M.P.ZOWACKI
DES.AP. M.P.ZOWACKI
ENG.AP. E.KLIMEK
MFG.AP. N / R
CAST.AP. N / R
DATE 7/12/13
S.O. D11200M10
SCALE N.T.S.
SIMILAR TO
PROCESS SPEC

R1000 CONTROL PANEL
FIELD WIRING CONNECTION BLOCK
WIRING DETAILS

THE CONTENTS OF THIS DOCUMENT ARE THE EXCLUSIVE PROPERTY OF FS-ELLIOTT CO., LLC AND CONTAIN CONFIDENTIAL AND PROPRIETARY INFORMATION AND MAY NOT BE USED, DISTRIBUTED OR DUPLICATED WITHOUT THE PRIOR WRITTEN CONSENT OF FS-ELLIOTT CO., LLC. THIS INFORMATION IS PROVIDED SUBJECT TO THE EXPRESS CONDITION THAT IT SHALL NOT BE USED, DISTRIBUTED OR DUPLICATED, IN WHOLE OR IN PART, OR USED FOR THE BENEFIT OF ANYONE OTHER THAN FS-ELLIOTT CO., LLC. FS-ELLIOTT CO., LLC HEREBY RESERVES ANY AND ALL RIGHTS AVAILABLE TO IT UNDER ANY AND ALL APPLICABLE LAWS, INCLUDING BUT NOT LIMITED TO, THOSE RIGHTS INCLUDED IN ANY CONFIDENTIALITY AGREEMENT BETWEEN THE RECIPIENT OF THIS INFORMATION AND FS-ELLIOTT CO., LLC.

ASSOCIATE PLANT IDENTIFICATION

SHEET 2 OF 12

FS-ELLIOTT®

© 2015 FS-ELLIOTT COMPANY, LLC.

AUTOCAD GENERATED DRAWING

XC- SP1351

REV 16

SUPERSEDED BY

SUPERSEDES

XC-SP1351

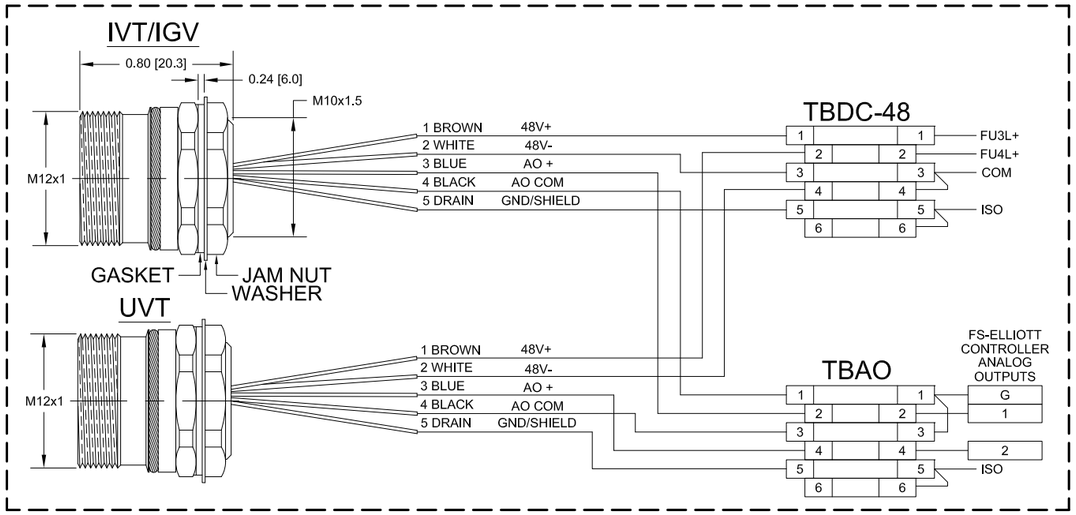

ELECTRIC VALVE CONFIGURATION (OPTION) (SEE NOTE)

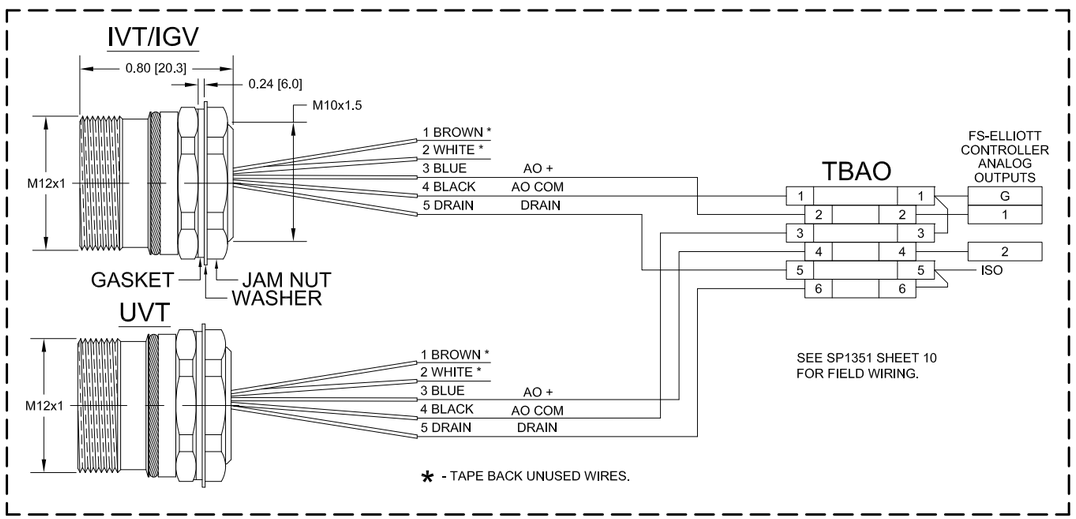

VALVE MOUNTED I/P CONFIGURATION (OPTION) (SEE NOTE)

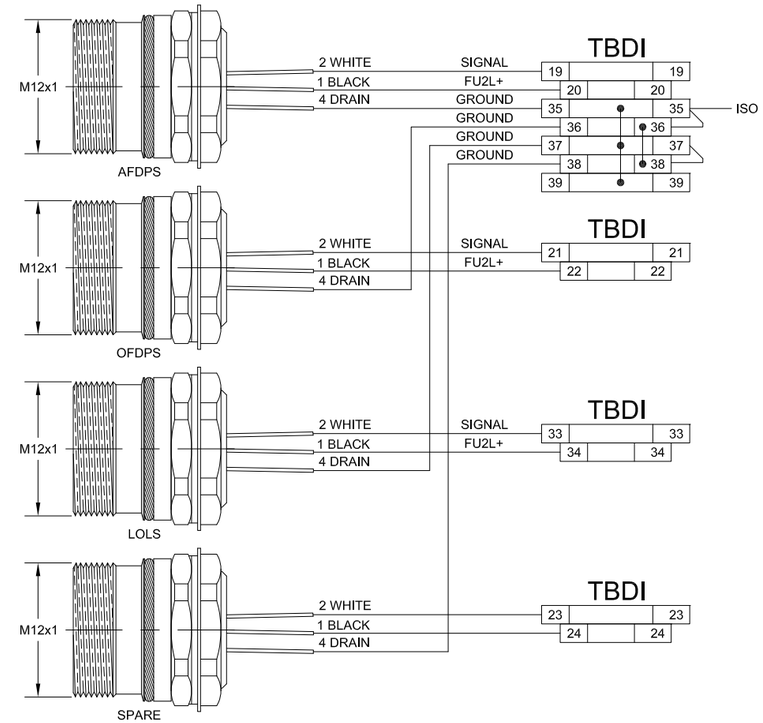

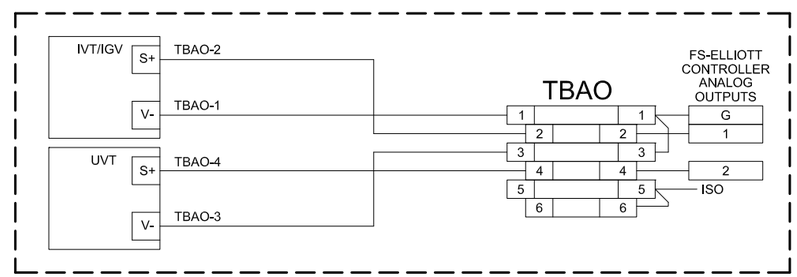

PANEL MOUNTED I/P CONFIGURATION (OPTION) (SEE NOTE)

NOTE:
VALVE WIRING CONFIGURATION MUST BE DETERMINED BY PANEL PART NUMBER (I.E. QP0950-XXXX).

◁	CHANGE DESCRIPTION
1	GENERAL REVISION MCGREGOR 10/16/13
2	AS BUILT MCGREGOR 10/31/13
3	SEE SHEET 5 MCGREGOR 12/30/13
4	ADD DIGITAL I/O MCGREGOR 1/31/14
5	ADD SIGNAL GROUND WIRING MCGREGOR 5/1/14
6	CORRECT TBDI WIRING MCGREGOR 10/2/14
7	SEE ECN14-593 MCGREGOR 12/16/14
8	SEE ECN15-37 MCGREGOR 1/22/15
9	SEE ECN15-196 N.DERRINGER 4/16/2015
10	SEE ECN15-400 M.SEIBEL 8/13/15
11	SEE ECN15-466 M.SEIBEL 9/29/15
12	SEE ECN15-470 M.SEIBEL 10/5/15
13	SEE ECN15-483 M.SEIBEL 10/13/15
14	SEE ECN15-497 M.SEIBEL 10/21/15
15	SEE ECN15-507 M.SEIBEL 10/21/15
16	SEE ECN16-10 M.J.BRILL 1/15/16

DR. MCGREGOR	R1000 CONTROL PANEL
CK. M.P.ZOWACKI	WIRING DIAGRAM SHEET 1
DES.AP. M.P.ZOWACKI	
ENG.AP. E.KLIMEK	
MFG.AP. N/R	
CAST.AP. N/R	
DATE 7/12/13	
S.O. D11200M10	
SCALE N.T.S.	
SIMILAR TO	
PROCESS SPEC	ASSOCIATE PLANT IDENTIFICATION
	SHEET 3 OF 12

THE CONTENTS OF THIS DOCUMENT ARE THE EXCLUSIVE PROPERTY OF FS-ELLIOTT CO., LLC AND CONTAIN CONFIDENTIAL AND PROPRIETARY INFORMATION AND MAY NOT BE USED, DISTRIBUTED OR DUPLICATED WITHOUT THE PRIOR WRITTEN CONSENT OF FS-ELLIOTT CO., LLC. THIS INFORMATION IS PROVIDED SUBJECT TO THE EXPRESS CONDITION THAT IT SHALL NOT BE USED, DISTRIBUTED OR DUPLICATED, IN WHOLE OR IN PART, OR USED FOR THE BENEFIT OF ANYONE OTHER THAN FS-ELLIOTT CO., LLC. FS-ELLIOTT CO., LLC HEREBY RESERVES ANY AND ALL RIGHTS AVAILABLE TO IT UNDER ANY AND ALL APPLICABLE LAWS, INCLUDING BUT NOT LIMITED TO, THOSE RIGHTS INCLUDED IN ANY CONFIDENTIALITY AGREEMENT BETWEEN THE RECIPIENT OF THIS INFORMATION AND FS-ELLIOTT CO., LLC.

© 2015 FS-ELLIOTT COMPANY, LLC.

AUTOCAD GENERATED DRAWING

XC- SP1351 REV 16

SUPERSEDES

SUPERSEDED BY

XC-SP1351

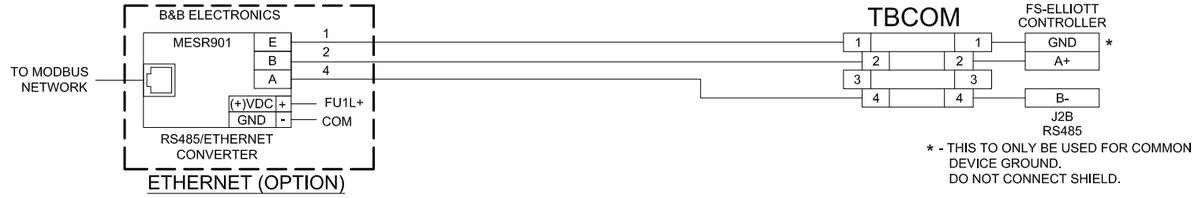

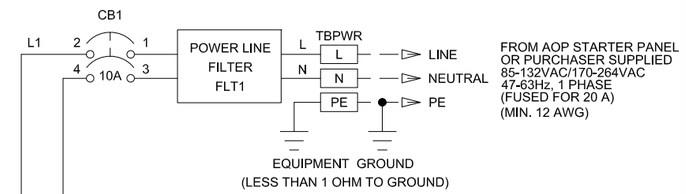

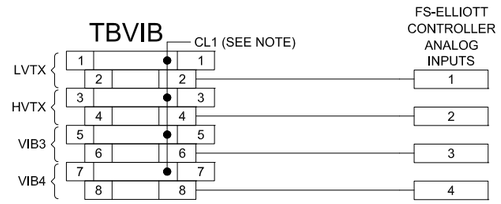

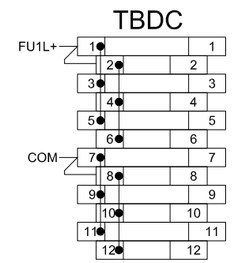

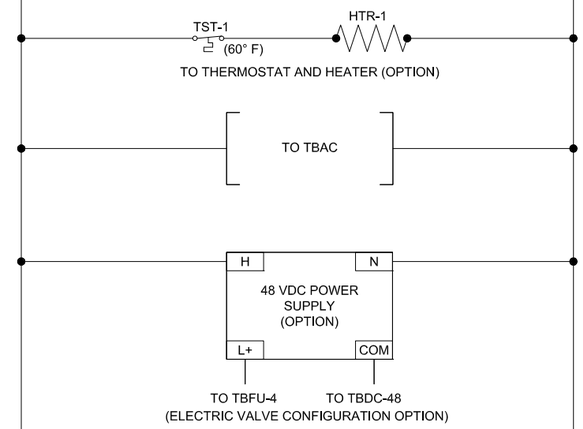

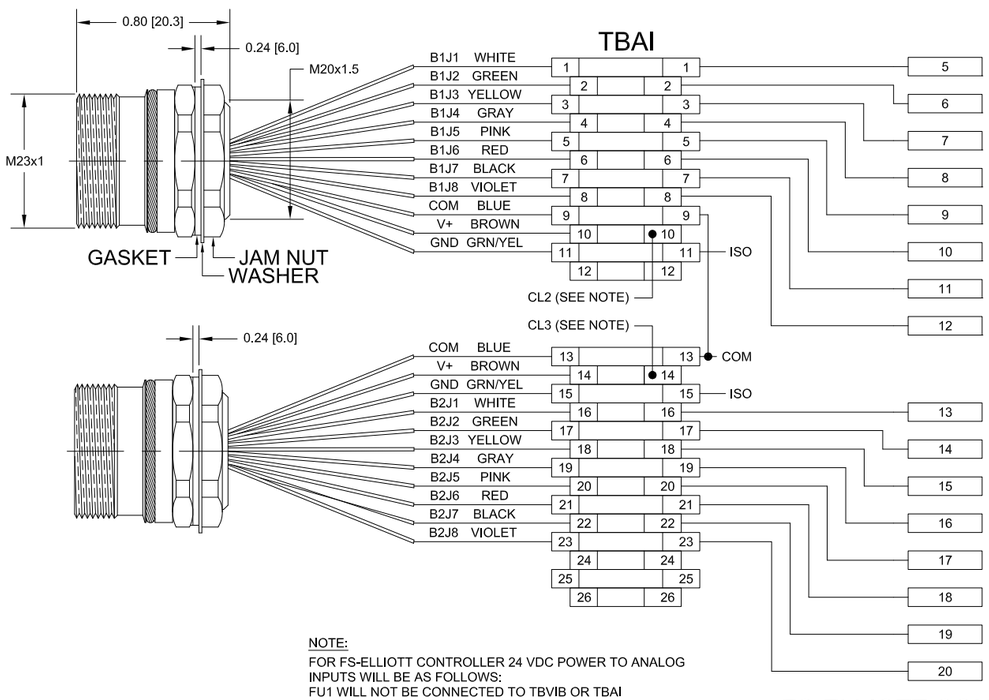

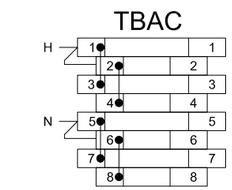

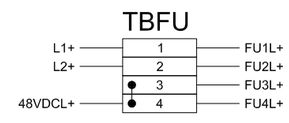

NOTE:
FOR FS-ELLIOTT CONTROLLER 24 VDC POWER TO ANALOG INPUTS WILL BE AS FOLLOWS:
FU1 WILL NOT BE CONNECTED TO TBVIB OR TBAI
CL1 WILL BE CONNECTED TO TBVIB 1,3,5 & 7
CL2 WILL BE CONNECTED TO TBAI 10
CL3 WILL BE CONNECTED TO TBAI 14

△	CHANGE DESCRIPTION
1	GENERAL REVISION MCGREGOR 10/16/13
2	AS BUILT MCGREGOR 10/31/13
3	SEE SHEET 5 MCGREGOR 12/30/13
4	SEE SHEET 3 MCGREGOR 1/31/14
5	REVISE TBFU MCGREGOR 5/1/14
6	ADD LINE FILTER MCGREGOR 10/2/14
7	SEE ECN14-593 MCGREGOR 12/16/14
8	SEE ECN15-37 MCGREGOR 1/22/15
9	SEE ECN15-196 N.DERRINGER 4/16/2015
10	SEE ECN15-400 M.SEIBEL 8/13/15
11	SEE ECN15-466 M.SEIBEL 9/29/15
12	SEE ECN15-470 M.SEIBEL 10/5/15
13	SEE ECN15-483 M.SEIBEL 10/13/15
14	SEE ECN15-497 M.SEIBEL 10/21/15
15	SEE ECN15-507 M.SEIBEL 10/21/15
16	SEE ECN16-10 M.J.BRILL 1/15/16

DR. MCGREGOR	R1000 CONTROL PANEL
CK. M.P.ZOWACKI	WIRING DIAGRAM SHEET 2
DES.AP. M.P.ZOWACKI	
ENG.AP. E.KLIMEK	
MFG.AP. N/R	
CAST.AP. N/R	
DATE 7/12/13	
S.O. D11200M10	
SCALE N.T.S.	
SIMILAR TO	
PROCESS SPEC	
ASSOCIATE PLANT IDENTIFICATION	
SHEET 4 OF 12	
AUTOCAD GENERATED DRAWING	
XC- SP1351	REV 16

THE CONTENTS OF THIS DOCUMENT ARE THE EXCLUSIVE PROPERTY OF FS-ELLIOTT CO., LLC AND CONTAIN CONFIDENTIAL AND PROPRIETARY INFORMATION AND MAY NOT BE USED, DISTRIBUTED OR DUPLICATED WITHOUT THE PRIOR WRITTEN CONSENT OF FS-ELLIOTT CO., LLC. THIS INFORMATION IS PROVIDED SUBJECT TO THE EXPRESS CONDITION THAT IT SHALL NOT BE USED, DISTRIBUTED OR DUPLICATED, IN WHOLE OR IN PART, OR USED FOR THE BENEFIT OF ANYONE OTHER THAN FS-ELLIOTT CO., LLC. FS-ELLIOTT CO., LLC HEREBY RESERVES ANY AND ALL RIGHTS AVAILABLE TO IT UNDER ANY AND ALL APPLICABLE LAWS, INCLUDING BUT NOT LIMITED TO, THOSE RIGHTS INCLUDED IN ANY CONFIDENTIALITY AGREEMENT BETWEEN THE RECIPIENT OF THIS INFORMATION AND FS-ELLIOTT CO., LLC.

© 2015 FS-ELLIOTT COMPANY, LLC.

SUPERSEDES
SUPERSEDED BY

XC-SP1351

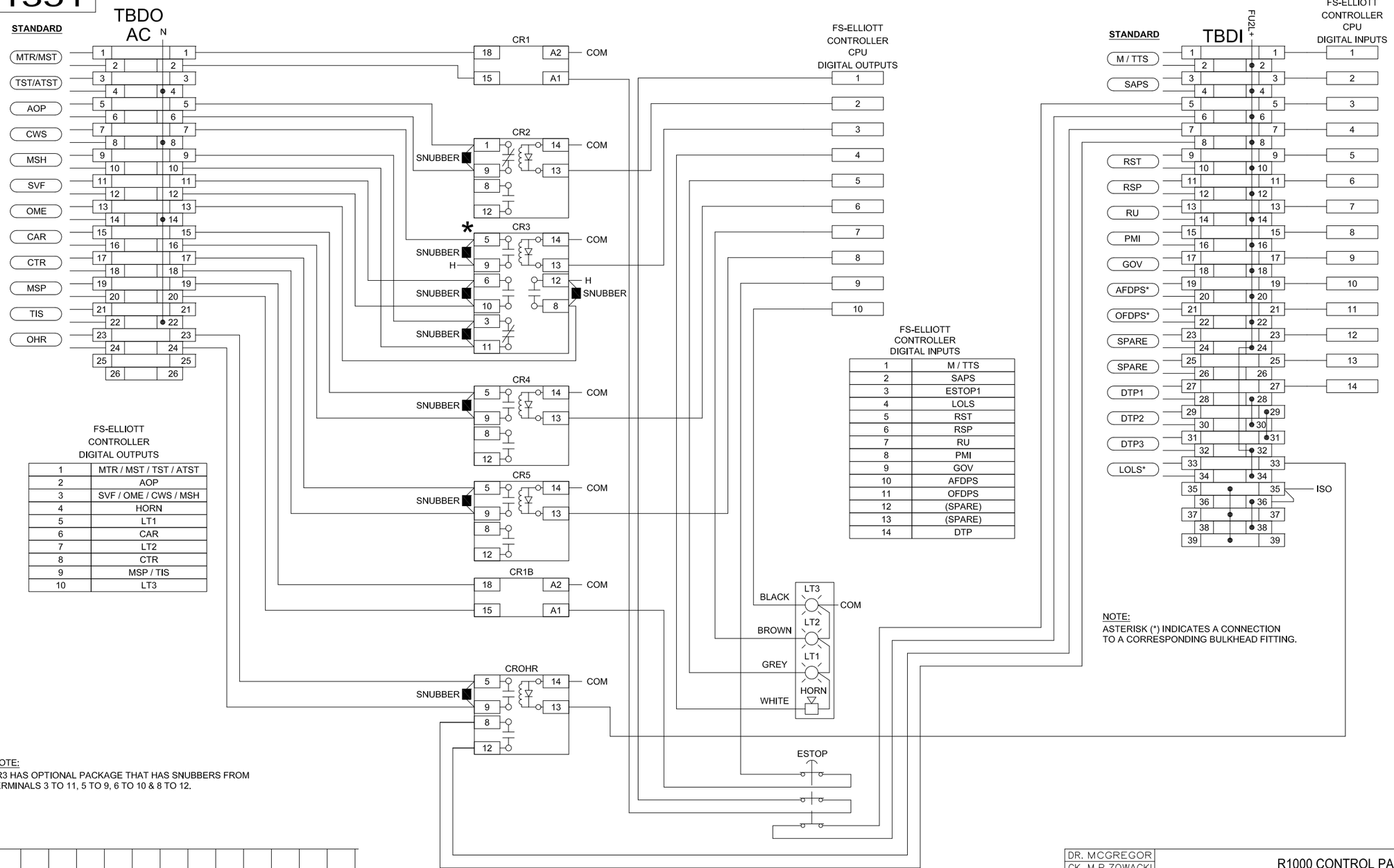

FS-ELLIOTT CONTROLLER DIGITAL OUTPUTS

1	MTR / MST / TST / ATST
2	AOP
3	SVF / OME / CWS / MSH
4	HORN
5	LT1
6	CAR
7	LT2
8	CTR
9	MSP / TIS
10	LT3

FS-ELLIOTT CONTROLLER DIGITAL INPUTS

1	M / TTS
2	SAPS
3	ESTOP1
4	LOLS
5	RST
6	RSP
7	RU
8	PMI
9	GOV
10	AFDPS
11	OFDPS
12	(SPARE)
13	(SPARE)
14	DTP

NOTE:
ASTERISK (*) INDICATES A CONNECTION TO A CORRESPONDING BULKHEAD FITTING.

* NOTE:
CR3 HAS OPTIONAL PACKAGE THAT HAS SNUBBERS FROM TERMINALS 3 TO 11, 5 TO 9, 6 TO 10 & 8 TO 12.

△	CHANGE DESCRIPTION
1	GENERAL REVISION MCGREGOR 10/16/13
2	AS BUILT MCGREGOR 10/31/13
3	ADD ASTERISK NOTE MCGREGOR 12/30/13
4	SEE SHEET 3 MCGREGOR 1/31/14
5	ADD SIGNAL GROUND TERMINALS MCGREGOR 5/1/14
6	SEE SHEET 3 MCGREGOR 10/2/14
7	SEE ECN14-593 MCGREGOR 12/16/14
8	SEE ECN15-37 MCGREGOR 1/22/15
9	SEE ECN15-196 N.DERRINGER 4/16/2015
10	SEE ECN15-400 M.SEIBEL 8/13/15
11	SEE ECN15-466 M.SEIBEL 9/29/15
12	SEE ECN15-470 M.SEIBEL 10/5/15
13	SEE ECN15-483 M.SEIBEL 10/13/15
14	SEE ECN15-497 M.SEIBEL 10/21/15
15	SEE ECN15-507 M.SEIBEL 10/21/15
16	SEE ECN16-10 M.J.BRILL 1/15/16

DR. MCGREGOR	R1000 CONTROL PANEL
CK. M.P.ZOWACKI	WIRING DIAGRAM
DES.AP. M.P.ZOWACKI	SHEET 3
ENG.AP. E.KLIMEK	
MFG.AP. N / R	
CAST.AP. N / R	
DATE 7/12/13	
S.O. D11200M10	
SCALE N.T.S.	
SIMILAR TO	
PROCESS SPEC	
ASSOCIATE PLANT IDENTIFICATION	
SHEET 5 OF 12	

THE CONTENTS OF THIS DOCUMENT ARE THE EXCLUSIVE PROPERTY OF FS-ELLIOTT CO., LLC AND CONTAIN CONFIDENTIAL AND PROPRIETARY INFORMATION AND MAY NOT BE USED, DISTRIBUTED OR DUPLICATED WITHOUT THE PRIOR WRITTEN CONSENT OF FS-ELLIOTT CO., LLC. THIS INFORMATION IS PROVIDED SUBJECT TO THE EXPRESS CONDITION THAT IT SHALL NOT BE USED, DISTRIBUTED OR DUPLICATED, IN WHOLE OR IN PART, OR USED FOR THE BENEFIT OF ANYONE OTHER THAN FS-ELLIOTT CO., LLC. FS-ELLIOTT CO., LLC HEREBY RESERVES ANY AND ALL RIGHTS AVAILABLE TO IT UNDER ANY AND ALL APPLICABLE LAWS, INCLUDING BUT NOT LIMITED TO, THOSE RIGHTS INCLUDED IN ANY CONFIDENTIALITY AGREEMENT BETWEEN THE RECIPIENT OF THIS INFORMATION AND FS-ELLIOTT CO., LLC.

FS ELLIOTT

© 2015 FS-ELLIOTT COMPANY, LLC.

AUTOCAD GENERATED DRAWING

XC- SP1351 REV 16

SUPERSEDED BY

SUPERSEDES

XC-SP1351

STANDARD PACKAGE - P300, P400 AND P600+ FRAMES

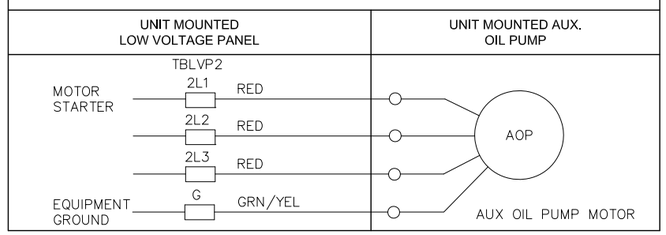

STANDARD PACKAGE - P500, P600 AND P700 FRAMES

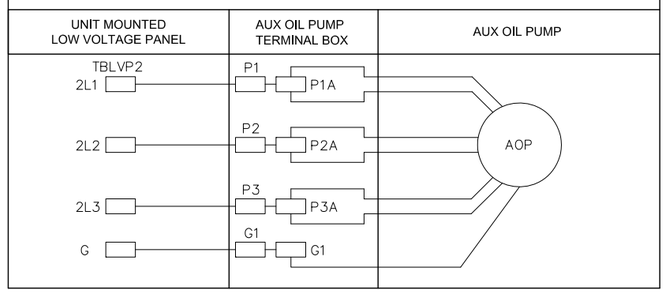

ALL FRAMES

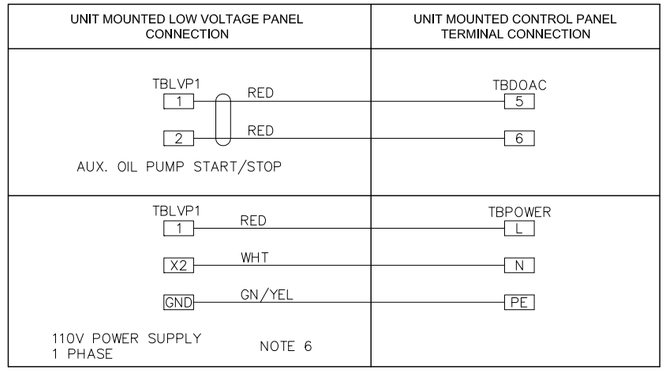

ALL FRAMES

MOTOR MONITORING PACKAGE

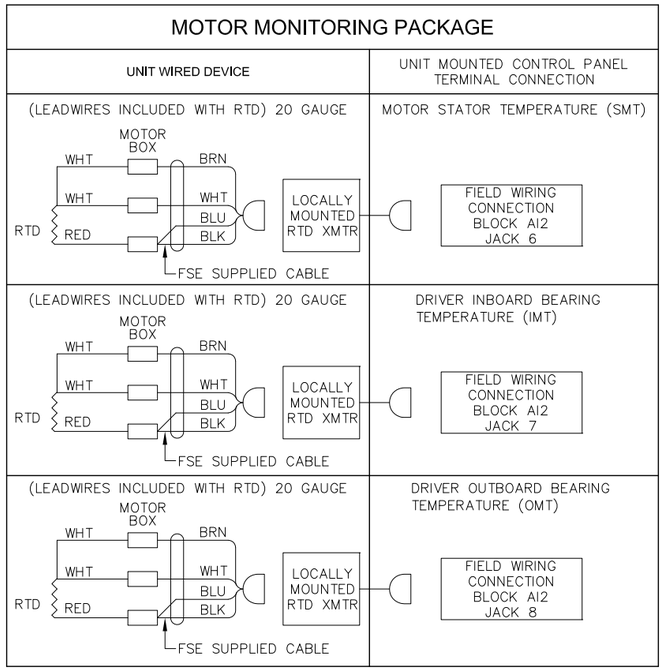

SYMBOLS

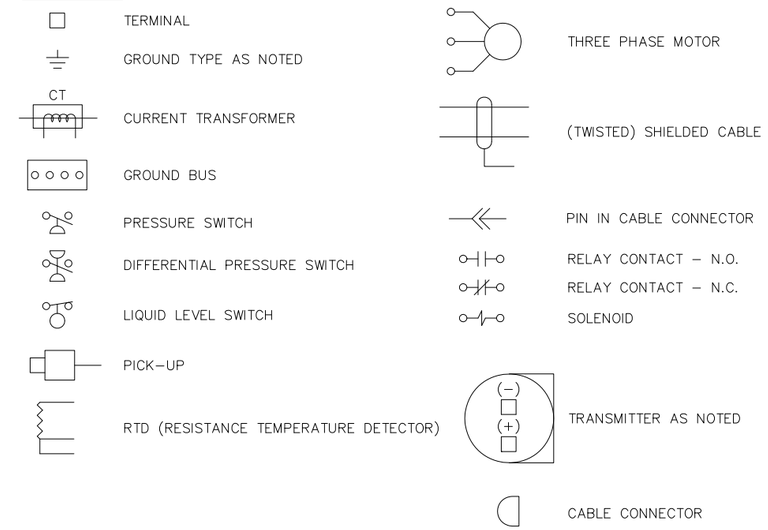

NOTES:

1. ALL CONTACT INPUTS AND OUTPUTS (EXCEPT AS NOTED) ARE POWERED BY THE CONTROL PANEL WITH 24 VDC.
2. FIELD DEVICE MUST BE POWERED BY CUSTOMER, MAXIMUM CURRENT 10 AMP AT 120VAC OR 5 AMP AT 220VAC (INDUCTIVE) OR 120 VDC.
3. PROPER GROUNDING TECHNIQUES SHOULD BE USED TO PREVENT NOISE INTERFERENCE AND DAMAGE TO CIRCUIT BOARDS.
4. POWER SUPPLY TO CONTROL PANEL SHOULD BE A SEPARATE POWER SOURCE WITH CONSTANT VOLTAGE SUPPLY. NOTE THAT MAIN MOTOR STARTING WILL CAUSE VOLTAGE DROPS TO CONTROL PANEL POWER SUPPLY IF COMMON SOURCE IS USED.
5. ALL PAINT MUST BE REMOVED FROM PANEL CONNECTION POINT.
6. VIBRATION EXTENSION CABLES MUST BE INSTALLED WITH 3 TURNS THROUGH A BROAD SPECTRUM FERRITE CORE WHICH SHALL BE INSTALLED INSIDE THE CONTROL PANEL. THE 3 WIRES CONNECTED TO TBPWR MUST BE INSTALLED WITH 3 TURNS THROUGH A BROAD SPECTRUM FERRITE CORE.

△	CHANGE DESCRIPTION
6	SEE SHEET 3 MCGREGOR 10/2/14
7	SEE ECN14-593 MCGREGOR 12/16/14
8	SEE ECN15-37 MCGREGOR 1/22/15
9	SEE ECN15-196 N.DERRINGER 4/16/2015
10	SEE ECN15-400 M.SEIBEL 8/13/15
11	SEE ECN15-466 M.SEIBEL 9/29/15
12	SEE ECN15-470 M.SEIBEL 10/5/15
13	SEE ECN15-483 M.SEIBEL 10/13/15
14	SEE ECN15-497 M.SEIBEL 10/21/15
15	SEE ECN15-507 M.SEIBEL 10/21/15
16	SEE ECN16-10 M.J.BRILL 1/15/16

DR. MCGREGOR	R1000 CONTROL PANEL CONNECTION DIAGRAMS
CK. M.P.ZOWACKI	
DES.AP. M.P.ZOWACKI	
ENG.AP. E.KLIMEK	
MFG.AP. N / R	
CAST.AP. N / R	
DATE 7/12/13	
S.O. D11200M10	
SCALE N.T.S.	
SIMILAR TO	
PROCESS SPEC	ASSOCIATE PLANT IDENTIFICATION
	SHEET 6 OF 12

THE CONTENTS OF THIS DOCUMENT ARE THE EXCLUSIVE PROPERTY OF FS-ELLIOTT CO., LLC AND CONTAIN CONFIDENTIAL AND PROPRIETARY INFORMATION AND MAY NOT BE USED, DISTRIBUTED OR DUPLICATED WITHOUT THE PRIOR WRITTEN CONSENT OF FS-ELLIOTT CO., LLC. THIS INFORMATION IS PROVIDED SUBJECT TO THE EXPRESS CONDITION THAT IT SHALL NOT BE USED, DISTRIBUTED OR DUPLICATED, IN WHOLE OR IN PART, OR USED FOR THE BENEFIT OF ANYONE OTHER THAN FS-ELLIOTT CO., LLC. FS-ELLIOTT CO., LLC HEREBY RESERVES ANY AND ALL RIGHTS AVAILABLE TO IT UNDER ANY AND ALL APPLICABLE LAWS, INCLUDING BUT NOT LIMITED TO, THOSE RIGHTS INCLUDED IN ANY CONFIDENTIALITY AGREEMENT BETWEEN THE RECIPIENT OF THIS INFORMATION AND FS-ELLIOTT CO., LLC.

FS-ELLIOTT®

© 2015 FS-ELLIOTT COMPANY, LLC.

AUTOCAD GENERATED DRAWING

XC- SP1351 REV 16

SUPERSEDED BY

SUPERSEDES

XC-SP1351

ALL FRAMES

STANDARD PACKAGE

UNIT WIRED DEVICE	UNIT MOUNTED CONTROL PANEL TERMINAL CONNECTION

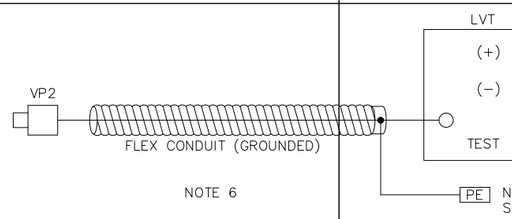

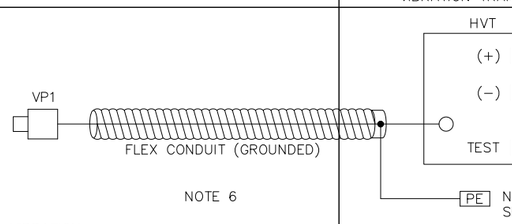

IF VALVE MOUNTED AND WIRED BY FS-ELLIOTT

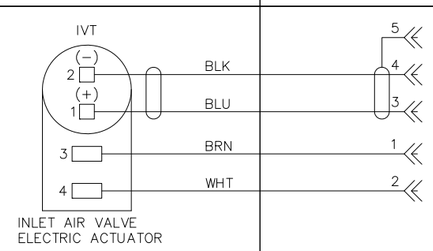

IF VALVE MOUNTED AND WIRED BY FS-ELLIOTT

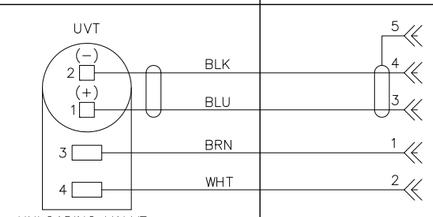

ALL FRAMES

MOTOR SPACE HEATER PACKAGE (MSH)

UNIT MOUNTED MOTOR CONNECTION	UNIT MOUNTED LOW VOLATGE PANEL TERMINAL CONNECTION

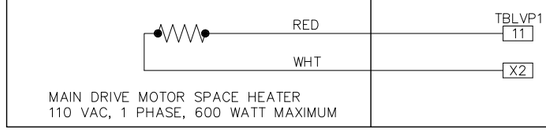

UNIT MOUNTED CONTROL PANEL TERMINAL CONNECTION	UNIT MOUNTED LOW VOLTAGE PANEL CONNECTION

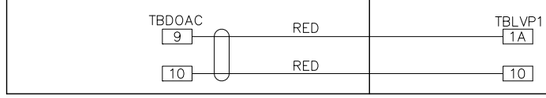

2ND HIGH SPEED VIBRATION TRANSMITTER PACKAGE

UNIT WIRED DEVICE	UNIT MOUNTED CONTROL PANEL TERMINAL CONNECTION

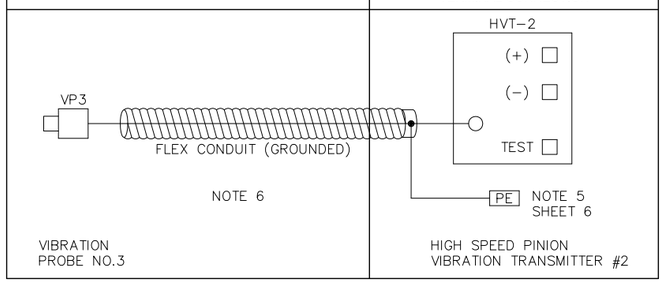

CONVENIENCE PACKAGE

UNIT WIRED DEVICE	UNIT MOUNTED CONTROL PANEL TERMINAL CONNECTION

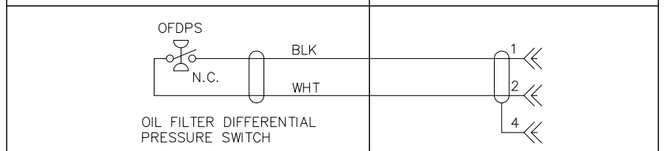

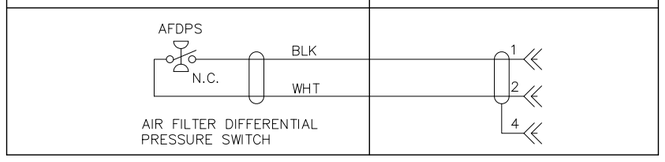

P300, P400, P500 FRAMES

SOUND ENCLOSURE PACKAGE

UNIT MOUNTED LOW VOLTAGE PANEL	SOUND ENCLOSURE

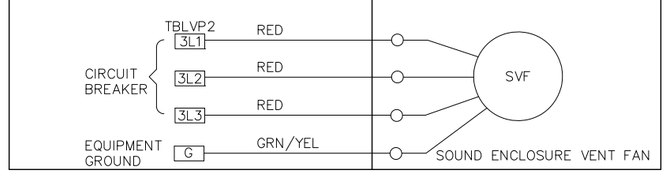

UNIT MOUNTED LOW VOLTAGE PANEL	UNIT MOUNTED CONTROL PANEL

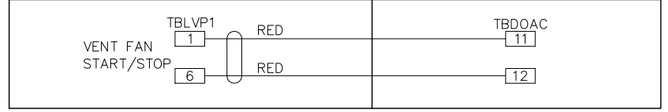

CHANGE DESCRIPTION	
6	SEE SHEET 3 MCGREGOR 10/2/14
7	SEE ECN14-593 MCGREGOR 12/16/14
8	SEE ECN15-37 MCGREGOR 1/22/15
9	SEE ECN15-196 N.DERRINGER 4/16/2015
10	SEE ECN15-400 M.SEIBEL 8/13/15
11	SEE ECN15-466 M.SEIBEL 9/29/15
12	SEE ECN15-470 M.SEIBEL 10/5/15
13	SEE ECN15-483 M.SEIBEL 10/13/15
14	SEE ECN15-497 M.SEIBEL 10/21/15
15	SEE ECN15-507 M.SEIBEL 10/21/15
16	SEE ECN16-10 M.J.BRILL 1/15/16

DR. MCGREGOR	R1000 CONTROL PANEL CONNECTION DIAGRAMS
CK. M.P.ZOWACKI	
DES.AP. M.P.ZOWACKI	
ENG.AP. E.KLIMEK	
MFG.AP. N/R	
CAST.AP. N/R	
DATE 7/12/13	
S.O. D11200M10	
SCALE N.T.S.	
SIMILAR TO	
PROCESS SPEC	
ASSOCIATE PLANT IDENTIFICATION	
SHEET 7 OF 12	
XC- SP1351	REV 16

THE CONTENTS OF THIS DOCUMENT ARE THE EXCLUSIVE PROPERTY OF FS-ELLIOTT CO., LLC AND CONTAIN CONFIDENTIAL AND PROPRIETARY INFORMATION AND MAY NOT BE USED, DISTRIBUTED OR DUPLICATED WITHOUT THE PRIOR WRITTEN CONSENT OF FS-ELLIOTT CO., LLC. THIS INFORMATION IS PROVIDED SUBJECT TO THE EXPRESS CONDITION THAT IT SHALL NOT BE USED, DISTRIBUTED OR DUPLICATED, IN WHOLE OR IN PART, OR USED FOR THE BENEFIT OF ANYONE OTHER THAN FS-ELLIOTT CO., LLC. FS-ELLIOTT CO., LLC HEREBY RESERVES ANY AND ALL RIGHTS AVAILABLE TO IT UNDER ANY AND ALL APPLICABLE LAWS, INCLUDING BUT NOT LIMITED TO, THOSE RIGHTS INCLUDED IN ANY CONFIDENTIALITY AGREEMENT BETWEEN THE RECIPIENT OF THIS INFORMATION AND FS-ELLIOTT CO., LLC.

© 2015 FS-ELLIOTT COMPANY, LLC.

AUTOCAD GENERATED DRAWING

SUPERSEDED BY

SUPERSEDES

XC-SP1351

P600+ FRAME

OIL HEATER AND LOW OIL LEVEL SWITCH PACKAGE

UNIT MOUNTED DEVICE	UNIT MOUNTED CONTROL PANEL TERMINAL CONNECTION

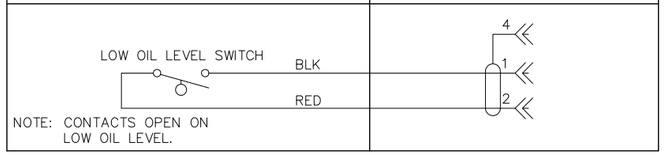

UNIT MOUNTED LOW VOLTAGE PANEL CONNECTION	UNIT MOUNTED CONTROL PANEL TERMINAL CONNECTION

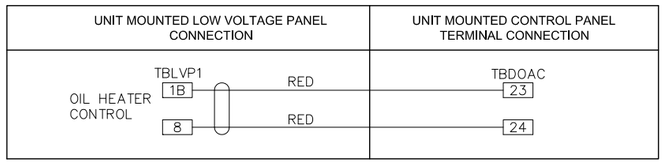

UNIT MOUNTED LOW VOLTAGE PANEL CONNECTION	UNIT MOUNTED DEVICE

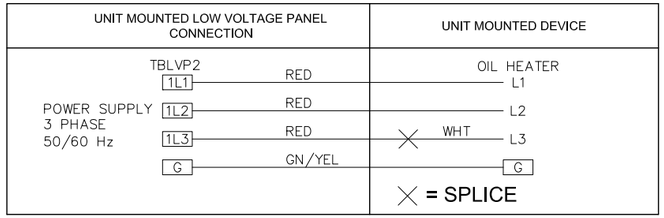

575 VOLT OIL HEATER

OIL HEATER AND LOW OIL LEVEL SWITCH PACKAGE

UNIT MOUNTED DEVICE	UNIT MOUNTED LOW VOLTAGE PANEL TERMINAL CONNECTION

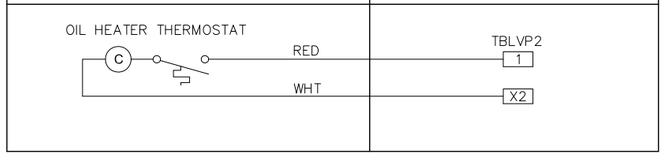

P300, P400, P500, P600 & P700 FRAMES

OIL HEATER AND LOW OIL LEVEL SWITCH PACKAGE

UNIT MOUNTED OIL HEATER	UNIT MOUNTED CONTROL PANEL TERMINAL CONNECTION

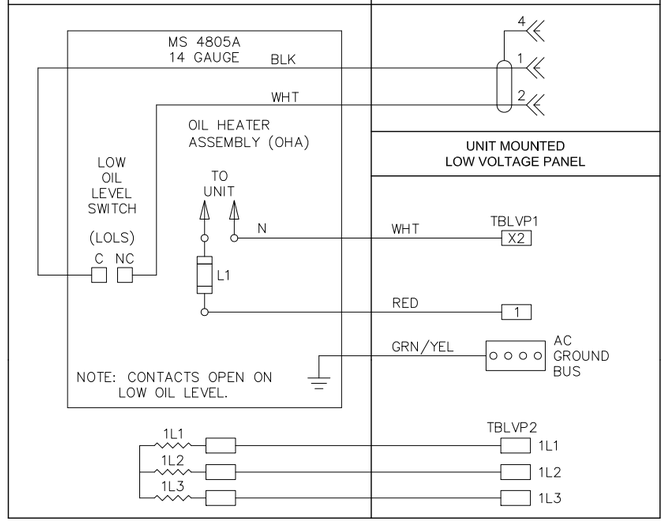

P300 FRAME

UNIT MOUNTED STARTER PANEL CONNECTION	UNIT MOUNTED LOW VOLTAGE PANEL TERMINAL CONNECTION

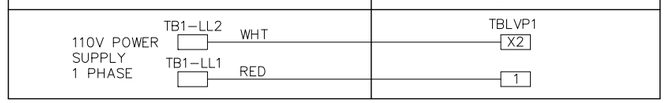

UNIT MOUNTED STARTER PANEL CONNECTION	UNIT MOUNTED LOW VOLTAGE PANEL TERMINAL CONNECTION

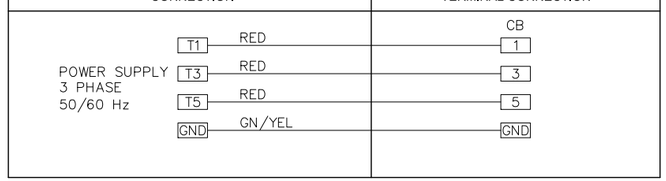

P300 FRAME

MOUNTED LOW VOLTAGE STARTER PACKAGE

UNIT MOUNTED STARTER PANEL CONNECTION	UNIT MOUNTED CONTROL PANEL TERMINAL CONNECTION

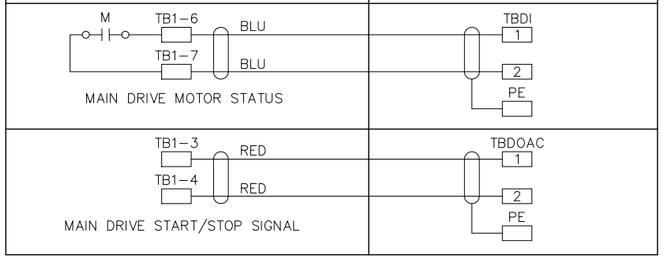

LOW VOLTAGE STARTER MOTOR WIRING

UNIT MOUNTED MOTOR STARTER PANEL	MOTOR

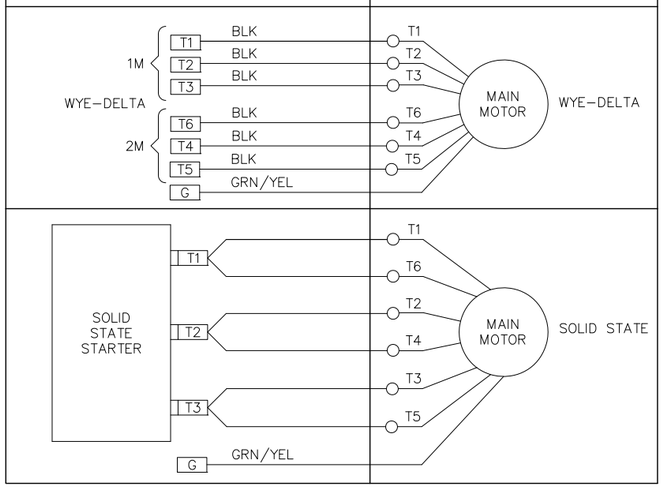

DR. MCGREGOR	R1000 CONTROL PANEL CONNECTION DIAGRAMS
CK. M.P.ZOWACKI	
DES.AP. M.P.ZOWACKI	
ENG.AP. E.KLIMEK	
MFG.AP. N/R	
CAST.AP. N/R	
DATE 7/12/13	
S.O. D11200M10	
SCALE N.T.S.	
SIMILAR TO	
PROCESS SPEC	
ASSOCIATE PLANT IDENTIFICATION	
SHEET 8 OF 12	

THE CONTENTS OF THIS DOCUMENT ARE THE EXCLUSIVE PROPERTY OF FS-ELLIOTT CO., LLC AND CONTAIN CONFIDENTIAL AND PROPRIETARY INFORMATION AND MAY NOT BE USED, DISTRIBUTED OR DUPLICATED WITHOUT THE PRIOR WRITTEN CONSENT OF FS-ELLIOTT CO., LLC. THIS INFORMATION IS PROVIDED SUBJECT TO THE EXPRESS CONDITION THAT IT SHALL NOT BE USED, DISTRIBUTED OR DUPLICATED, IN WHOLE OR IN PART, OR USED FOR THE BENEFIT OF ANYONE OTHER THAN FS-ELLIOTT CO., LLC. FS-ELLIOTT CO., LLC HEREBY RESERVES ANY AND ALL RIGHTS AVAILABLE TO IT UNDER ANY AND ALL APPLICABLE LAWS, INCLUDING BUT NOT LIMITED TO, THOSE RIGHTS INCLUDED IN ANY CONFIDENTIALITY AGREEMENT BETWEEN THE RECIPIENT OF THIS INFORMATION AND FS-ELLIOTT CO., LLC.

FS ELLIOTT

© 2015 FS-ELLIOTT COMPANY, LLC.

AUTOCAD GENERATED DRAWING

XC- SP1351 REV 16

△	CHANGE DESCRIPTION
6	ADD P300 LVP WIRING MCGREGOR 10/2/14
7	SEE ECN14-593 MCGREGOR 12/16/14
8	SEE ECN15-37 MCGREGOR 1/22/15
9	SEE ECN15-196 N.DERRINGER 4/16/2015
10	SEE ECN15-400 M.SEIBEL 8/13/15
11	SEE ECN15-466 M.SEIBEL 9/29/15
12	SEE ECN15-470 M.SEIBEL 10/5/15
13	SEE ECN15-483 M.SEIBEL 10/13/15
14	SEE ECN15-497 M.SEIBEL 10/21/15
15	SEE ECN15-507 M.SEIBEL 10/21/15
16	SEE ECN16-10 M.J.BRILL 1/15/16

SUPERSEDED BY

SUPERSEDES

XC-SP1351

ALL FRAMES

STANDARD PACKAGE

FIELD WIRING	UNIT MOUNTED CONTROL PANEL TERMINAL CONNECTION
M — MAIN DRIVE MOTOR STATUS – FROM CUSTOMER STARTER	TBDI 1, 2
TO MAIN DRIVE MOTOR STARTER (MAIN DRIVE START/TRIP/STOP SIGNAL DRY CONTACT CLOSURE TO START. USED FOR MAINTAINED DRY CONTACT CLOSURE TO START) (SEE NOTE 2) — AC LINE; AC LOAD CONTROLLER INPUT	TBDOAC 1; 2
MAIN DRIVE MOMENTARY STOP — AC LINE; AC LOAD CONTROLLER INPUT	TBDOAC 19; 20
IF MOTOR MOUNTED AND WIRED IN THE FIELD — NOTE: RUN ANY ONE OF 3 WIRES THRU HOLE OF CT. MOUNT CT TO MAIN DRIVE MOTOR CONDUIT BOX. BLUE, BROWN, MAT, X1 X2 MOTOR AMPS TRANSMITTER; MAIN DRIVE MOTOR; NOTE: CUT OFF FEMALECABLE CONNECTOR	1, 2, 5 — FIELD WIRING CONNECTION BLOCK AI1 JACK 5
	INSTRUMENT COMMON ISOLATED BUS (ISO) — CONNECT TO INSTRUMENT COMMON GROUND BUS OR EARTH GROUND.
COMMON ALARM REMOTE ANNUNCIATION. (CAR)	TBDOAC 15; 16
COMMON TRIP REMOTE ANNUNCIATION. (CTR)	TBDOAC 17; 18
REMOTE START DRY CONTACT CLOSURE TO INITIATE (RST) NOTE 1	TBDI 9; 10
REMOTE STOP DRY CONTACT CLOSURE TO INITIATE (RSP) NOTE 1	TBDI 11; 12
REMOTE UNLOAD DRY CONTACT CLOSURE TO INITIATE (RU) NOTE 1	TBDI 13; 14

P300 FRAME

MOUNTED LOW VOLTAGE STARTER PACKAGE

FIELD WIRING	UNIT MOUNTED MOTOR STARTER PANEL
CIRCUIT PROTECTION AND DISCONNECT PROVIDED BY CUSTOMER (SEE NOTE 14)	L1(A), L2(B), L3(C)
EQUIPMENT GROUND — GRN/YEL	COMMON AC GROUND BUS

△	CHANGE DESCRIPTION
6	NO CHANGES THIS SHEET MCGREGOR 10/2/14
7	SEE ECN14-593 MCGREGOR 12/16/14
8	SEE ECN15-37 MCGREGOR 1/22/15
9	SEE ECN15-196 N.DERRINGER 4/16/2015
10	SEE ECN15-400 M.SEIBEL 8/13/15
11	SEE ECN15-466 M.SEIBEL 9/29/15
12	SEE ECN15-470 M.SEIBEL 10/5/15
13	SEE ECN15-483 M.SEIBEL 10/13/15
14	SEE ECN15-497 M.SEIBEL 10/21/15
15	SEE ECN15-507 M.SEIBEL 10/21/15
16	SEE ECN16-10 M.J.BRILL 1/15/16

DR. MCGREGOR	R1000 CONTROL PANEL
CK. M.P.ZOWACKI	CONNECTION DIAGRAMS FIELD WIRED DEVICES
DES.AP. M.P.ZOWACKI	
ENG.AP. E.KLIMEK	
MFG.AP. N/R	
CAST.AP. N/R	
DATE 7/12/13	
S.O. D11200M10	
SCALE N.T.S.	
SIMILAR TO	
PROCESS SPEC	
ASSOCIATE PLANT IDENTIFICATION	
SHEET 9 OF 12	
XC- SP1351	REV 16

THE CONTENTS OF THIS DOCUMENT ARE THE EXCLUSIVE PROPERTY OF FS-ELLIOTT CO., LLC AND CONTAIN CONFIDENTIAL AND PROPRIETARY INFORMATION AND MAY NOT BE USED, DISTRIBUTED OR DUPLICATED WITHOUT THE PRIOR WRITTEN CONSENT OF FS-ELLIOTT CO., LLC. THIS INFORMATION IS PROVIDED SUBJECT TO THE EXPRESS CONDITION THAT IT SHALL NOT BE USED, DISTRIBUTED OR DUPLICATED, IN WHOLE OR IN PART, OR USED FOR THE BENEFIT OF ANYONE OTHER THAN FS-ELLIOTT CO., LLC. FS-ELLIOTT CO., LLC HEREBY RESERVES ANY AND ALL RIGHTS AVAILABLE TO IT UNDER ANY AND ALL APPLICABLE LAWS, INCLUDING BUT NOT LIMITED TO, THOSE RIGHTS INCLUDED IN ANY CONFIDENTIALITY AGREEMENT BETWEEN THE RECIPIENT OF THIS INFORMATION AND FS-ELLIOTT CO., LLC.

© 2015 FS–ELLIOTT COMPANY, LLC.

AUTOCAD GENERATED DRAWING

SUPERSEDED BY

SUPERSEDES

XC-SP1351

ALL FRAMES

CONVENIENCE PACKAGE

AIR FILTER DIFFERENTIAL PRESSURE SWITCH

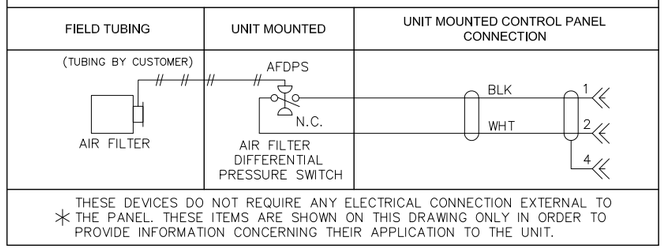

✳ THESE DEVICES DO NOT REQUIRE ANY ELECTRICAL CONNECTION EXTERNAL TO THE PANEL. THESE ITEMS ARE SHOWN ON THIS DRAWING ONLY IN ORDER TO PROVIDE INFORMATION CONCERNING THEIR APPLICATION TO THE UNIT.

COOLING WATER SOLENOID PACKAGE

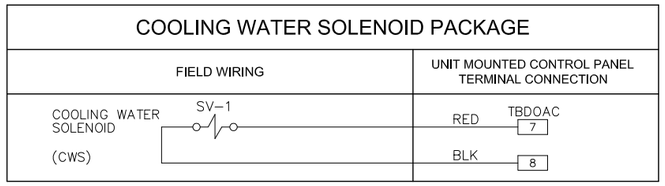

INTERSTAGE SENSING PACKAGE

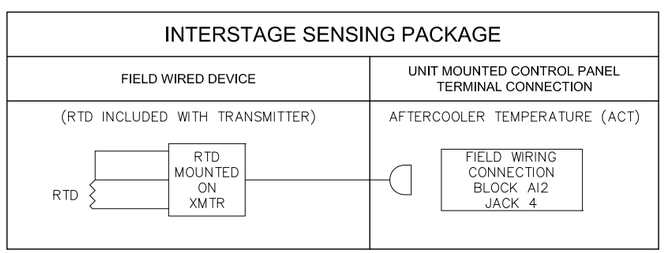

ALL FRAMES

DRAIN TRAP CONDENSATE ALARM PACKAGE

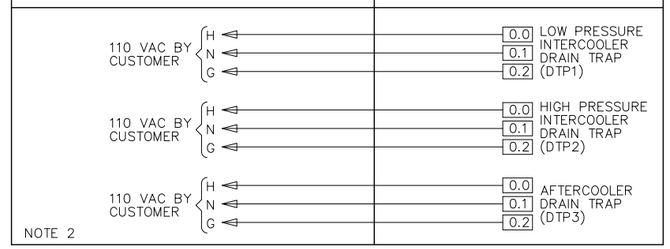

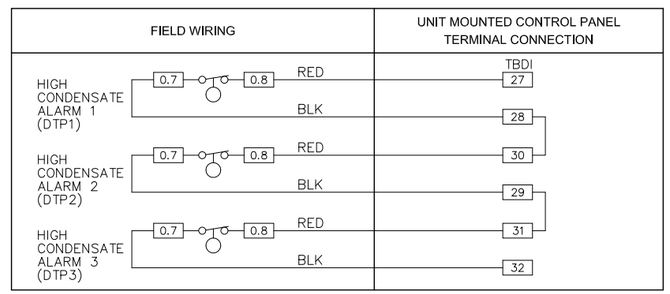

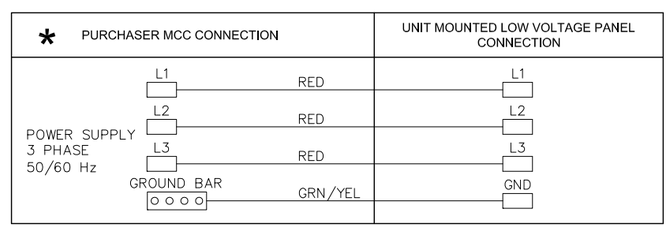

✳ - ONLY USED WITH STAND-ALONE STARTER.

VALVE MOUNTED I/P OPTION

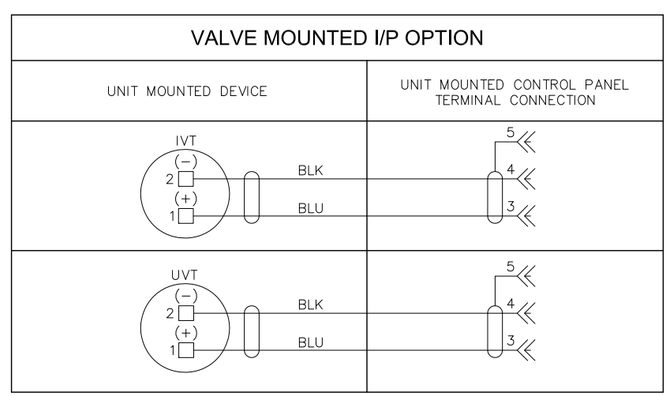

ALL FRAMES

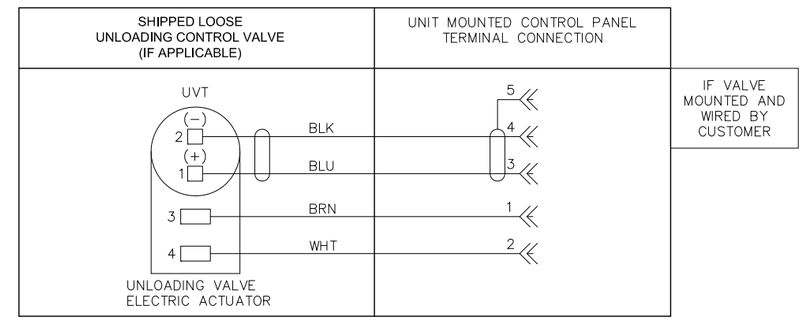

LOW VOLTAGE STARTER MOTOR WIRING

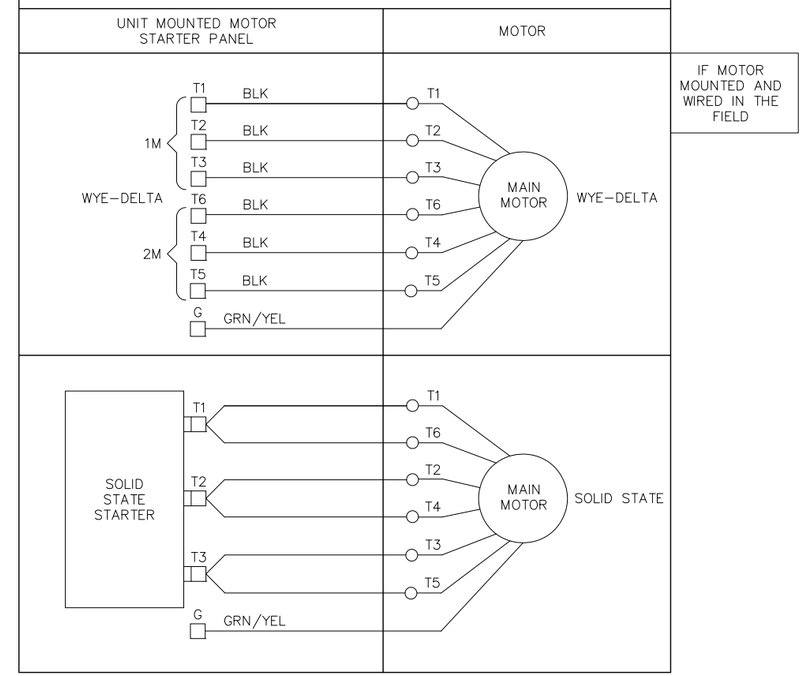

DR. MCGREGOR	R1000 CONTROL PANEL
CK. M.P.ZOWACKI	CONNECTION DIAGRAM
DES.AP. M.P.ZOWACKI	FIELD WIRED DEVICES
ENG.AP. E.KLIMEK	
MFG.AP. N/R	
CAST.AP. N/R	
DATE 7/12/13	
S.O. D11200M10	
SCALE N.T.S.	
SIMILAR TO	
PROCESS SPEC	

THE CONTENTS OF THIS DOCUMENT ARE THE EXCLUSIVE PROPERTY OF FS-ELLIOTT CO., LLC AND CONTAIN CONFIDENTIAL AND PROPRIETARY INFORMATION AND MAY NOT BE USED, DISTRIBUTED OR DUPLICATED WITHOUT THE PRIOR WRITTEN CONSENT OF FS-ELLIOTT CO., LLC. THIS INFORMATION IS PROVIDED SUBJECT TO THE EXPRESS CONDITION THAT IT SHALL NOT BE USED, DISTRIBUTED OR DUPLICATED, IN WHOLE OR IN PART, OR USED FOR THE BENEFIT OF ANYONE OTHER THAN FS-ELLIOTT CO., LLC. FS-ELLIOTT CO., LLC HEREBY RESERVES ANY AND ALL RIGHTS AVAILABLE TO IT UNDER ANY AND ALL APPLICABLE LAWS, INCLUDING BUT NOT LIMITED TO, THOSE RIGHTS INCLUDED IN ANY CONFIDENTIALITY AGREEMENT BETWEEN THE RECIPIENT OF THIS INFORMATION AND FS-ELLIOTT CO., LLC.

ASSOCIATE PLANT IDENTIFICATION

SHEET 10 OF 12

FS-ELLIOTT®

© 2015 FS-ELLIOTT COMPANY, LLC.

AUTOCAD GENERATED DRAWING

XC- SP1351 REV 16

SUPERSEDED BY

SUPERSEDES

△	CHANGE DESCRIPTION
6	ADD STAND-ALONE STARTER NOTE MCGREGOR 10/2/14
7	SEE ECN14-593 MCGREGOR 12/16/14
8	SEE ECN15-37 MCGREGOR 1/22/15
9	SEE ECN15-196 N.DERRINGER 4/16/2015
10	SEE ECN15-400 M.SEIBEL 8/13/15
11	SEE ECN15-466 M.SEIBEL 9/29/15
12	SEE ECN15-470 M.SEIBEL 10/5/15
13	SEE ECN15-483 M.SEIBEL 10/13/15
14	SEE ECN15-497 M.SEIBEL 10/21/15
15	SEE ECN15-507 M.SEIBEL 10/21/15
16	SEE ECN16-10 M.J.BRILL 1/15/16

XC-SP1351

STANDARD WIRING

FEATURES	TAG NO.	FROM ITEM	FROM TERM	TO ITEM	TO TERM	MATERIAL SPEC. NO.	WIRE GAUGE	WIRE COLOR	FRAME *
MOTOR AMPS TRANSMITTER (MAT) ALL FRAMES	3	MAT	X1(+)	FSE SUPPLIED CABLE	PIN 1		16	BLUE	3,4,5,6,6+,7
		MAT	X2(−)		PIN 2		16	BROWN	3,4,5,6,6+,7
		N/A	N/A		PIN 5		18	SHLD	3,4,5,6,6+,7
AUX. OIL PUMP (AOP) P300, P400 &P600+	T1	AOP	THREE LEADS	LVP	2L1	SEE NOTE 10	14	RED	3,4,6+
	T2	AOP		LVP	2L2		14	RED	3,4,6+
	T3	AOP		LVP	2L3		14	RED	3,4,6+
	G	AOP	G	LVP	GRN		14	GRN/YEL	3,4,6+
AUX. OIL PUMP (AOP) P500, P600 & P700	P1A	AOP	THREE LEADS	LVP	2L1	SEE NOTE 10	14	RED	5,6,7
	P2A	AOP		LVP	2L2		14	RED	5,6,7
	P3A	AOP		LVP	2L3		14	RED	5,6,7
	G1	AOP	G	LVP	G1		14	GRN/YEL	5,6,7

* – 3, 4, 5, 6, 6+, 7 DENOTE COMPRESSOR FRAME SIZES P300, P400, P500, P600, P600+, & P700

STANDARD WIRING

FEATURES	TAG NO.	FROM TERM	TO ITEM	MATERIAL SPEC. NO.	WIRE GAUGE	WIRE COLOR	FRAME *
LVT	LVT	VIB.PROBE CONDUIT GROUNDING HUB	SHIELD GROUND	SEE NOTE 10	14	GRN/YEL	3,4,5,6,6+,7
HVT	HVT	VIB.PROBE CONDUIT GROUNDING HUB	SHIELD GROUND	SEE NOTE 10	14	GRN/YEL	3,4,5,6,6+,7

HVT2 OPTION PACKAGE

FEATURES	TAG NO.	FROM TERM	TO ITEM	MATERIAL SPEC. NO.	WIRE GAUGE	WIRE COLOR	FRAME *
HVT2	HVT2	VIB.PROBE CONDUIT GROUNDING HUB	SHIELD GROUND	SEE NOTE 10	14	GRN/YEL	3,4,5,6,6+,7

ELECTRIC VALVE CONFIGURATION (ALL FRAMES)

INLET VANE/ GUIDE VANE ELECTRIC ACTUATOR (IVT/IGV) ALL FRAMES	4	IVT	(−)2	FSE SUPPLIED CABLE	PIN 4		20	BLK	3,4,5,6,6+,7
		IVT	(+)1		PIN 3		20	BLU	3,4,5,6,6+,7
		N/A	N/A		PIN 5		22	SHLD	3,4,5,6,6+,7
		IVT (+)	3		PIN 1		20	BRN	3,4,5,6,6+,7
		IVT (−)	4		PIN 2		20	WHT	3,4,5,6,6+,7
UNLOADING VALVE ELECTRIC ACTUATOR (UVT) ALL FRAMES	6	UVT	(−)2	FSE SUPPLIED CABLE	PIN 4		20	BLK	3,4,5,6,6+,7
		UVT	(+)1		PIN 3		20	BLU	3,4,5,6,6+,7
		N/A	N/A		PIN 5		22	SHLD	3,4,5,6,6+,7
		UVT (+)	3		PIN 1		20	BRN	3,4,5,6,6+,7
		UVT (−)	4		PIN 2		20	WHT	3,4,5,6,6+,7

VALVE MOUNTED I/P CONFIGURATION (ALL FRAMES)

INLET VANE/ GUIDE VANE ACTUATOR (IVT/IGV) ALL FRAMES	4	IVT	(−)2	FSE SUPPLIED CABLE	PIN 4		20	BLK	3,4,5,6,6+,7
		IVT	(+)1		PIN 3		20	BLU	3,4,5,6,6+,7
		N/A	N/A		PIN 5		22	SHLD	3,4,5,6,6+,7
		N/A	3		PIN 1		20	BRN	3,4,5,6,6+,7
		N/A	4		PIN 2		20	WHT	3,4,5,6,6+,7
UNLOADING VALVE ACTUATOR (UVT) ALL FRAMES	6	UVT	(−)2	FSE SUPPLIED CABLE	PIN 4		20	BLK	3,4,5,6,6+,7
		UVT	(+)1		PIN 3		20	BLU	3,4,5,6,6+,7
		N/A	N/A		PIN 5		22	SHLD	3,4,5,6,6+,7
		N/A	3		PIN 1		20	BRN	3,4,5,6,6+,7
		N/A	4		PIN 2		20	WHT	3,4,5,6,6+,7

CONVENIENCE PACKAGE (ALL FRAMES)

FEATURES	TAG NO.	FROM ITEM	FROM TERM	TO ITEM	TO TERM	MATERIAL SPEC. NO.	WIRE GAUGE	WIRE COLOR	FRAME *
AIR FILTER DELTA–P SWITCH (AFDPS)	8	AFDPS	C	FSE SUPPLIED CABLE	PIN 1	SEE NOTE 9	20	BLK	3,4,5,6,6+,7
		AFDPS	NC		PIN 2		20	WHT	3,4,5,6,6+,7
		N/A	N/A		PIN 3		22	SHLD	3,4,5,6,6+,7
OIL FILTER DELTA–P SWITCH (OFDPS)	9	OFDPS	C	FSE SUPPLIED CABLE	PIN 1	SEE NOTE 9	20	BLK	3,4,5,6,6+,7
		OFDPS	NC		PIN 2		20	WHT	3,4,5,6,6+,7
		N/A	N/A		PIN 3		22	SHLD	3,4,5,6,6+,7

MOTOR MONITORING PACKAGE (ALL FRAMES)

FEATURES	TAG NO.	FROM ITEM	FROM TERM	TO ITEM	MATERIAL SPEC. NO.	WIRE GAUGE	WIRE COLOR	FRAME *
MOTOR STATOR TEMPERATURE (SMT)	12	SMT (WHT)	1	FSE SUPPLIED CABLE	SEE NOTE 8	22	BRN (PIN1)	3,4,5,6,6+,7
		SMT (WHT)	2			22	WHT (PIN2)	3,4,5,6,6+,7
		SMT (RED)	3			22	BLU (PIN3)	3,4,5,6,6+,7
		SMT (RED)*	3			22	BLK (PIN4)	3,4,5,6,6+,7
			N/C				SHLD	3,4,5,6,6+,7
MOTOR INBOARD BEARING TEMP. (IMT)	13	IMT (WHT)	1	FSE SUPPLIED CABLE	SEE NOTE 8	22	BRN (PIN1)	3,4,5,6,6+,7
		IMT (WHT)	2			22	WHT (PIN2)	3,4,5,6,6+,7
		IMT (RED)	3			22	BLU (PIN3)	3,4,5,6,6+,7
		IMT (RED)*	3			22	BLK (PIN4)	3,4,5,6,6+,7
			N/C				SHLD	3,4,5,6,6+,7
MOTOR OUTBOARD BEARING TEMP. (OMT)	14	OMT (WHT)	1	FSE SUPPLIED CABLE	SEE NOTE 8	22	BRN (PIN1)	3,4,5,6,6+,7
		OMT (WHT)	2			22	WHT (PIN2)	3,4,5,6,6+,7
		OMT (RED)	3			22	BLU (PIN3)	3,4,5,6,6+,7
		OMT (RED)*	3			22	BLK (PIN4)	3,4,5,6,6+,7
			N/C				SHLD	3,4,5,6,6+,7

* ONLY APPLICABLE IF 4 WIRE RTD IS USED.

MOTOR SPACE HEATER PACKAGE (ALL FRAMES)

FEATURES	TAG NO.	FROM ITEM	FROM TERM	TO ITEM	TO TERM	MATERIAL SPEC. NO.	WIRE GAUGE	WIRE COLOR	FRAME *
MOTOR SPACE HEATER	16	MOTOR	SEE NAMEPLATE	LVP	11	SEE NOTE 12	14	WHT	3,4,5,6,6+,7
				LVP	X2		14	WHT	3,4,5,6,6+,7
				LVP	N/C		14	GRN/YEL	3,4,5,6,6+,7
ON/OFF CONTROL	9	LCP	9	LVP	1A	SEE NOTE 10	14	RED	3,4,5,6,6+,7
	10		10	LVP	10			RED	3,4,5,6,6+,7

WIRING NOTES:

7. RTD WIRING INCLUDED WITH RTD.

8. CABLE (P8650A604) WILL BE USED TO CONNECT MOTOR RTD'S TO THE TEMPERATURE TRANSMITTERS. CUT OFF AND STRIP BACK THE FEMALE CABLE END.

9. INSTRUMENT CABLE, 2 CONDUCTOR (20 AWG, ONE PAIR, RED & BLACK) STRANDED (19x32) TC – TINNED COPPER CONDUCTORS, PVC – POLYVINYL CHLORIDE INSULATION, OVERALL ALUMINUM FOIL–POLYESTER TAPE SHIELD WITH A 22 AWG TINNED COPPER DRAIN WIRE, 100% SHIELD COVERAGE, SUNLIGHT RESISTANT PVC – POLYVINYL CHLORIDE JACKET. APPLICABLE SPECIFICATIONS: UL AND CSA APPROVED, FS–ELLIOTT MATERIAL SPECIFICATION 4840–020.

10. 14 AWG SINGLE CONDUCTOR – THHN/THWN/AWM/MTW STRANDED COPPER WIRE; 600 VOLT RATED INSULATION; 90°C DRY LOCATIONS, 75°C WET LOCATIONS, MOISTURE, HEAT, GASOLINE, AND OIL RESISTANT. APPLICABLE SPECIFICATIONS: UL AND CSA CERTIFIED, FS–ELLIOTT MATERIAL SPECIFICATION 4805A.

11. INPUT/OUTPUT IS POWERED WITH 24 VDC.

△	CHANGE DESCRIPTION
6	NO CHANGES THIS SHEET MCGREGOR 10/2/14
7	SEE ECN14-593 MCGREGOR 12/16/14
8	SEE ECN15-37 MCGREGOR 1/22/15
9	SEE ECN15-196 N.DERRINGER 4/16/2015
10	SEE ECN15-400 M.SEIBEL 8/13/15
11	SEE ECN15-466 M.SEIBEL 9/29/15
12	SEE ECN15-470 M.SEIBEL 10/5/15
13	SEE ECN15-483 M.SEIBEL 10/13/15
14	SEE ECN15-497 M.SEIBEL 10/21/15
15	SEE ECN15-507 M.SEIBEL 10/21/15
16	SEE ECN16-10 M.J.BRILL 1/15/16

DR. MCGREGOR	R1000 CONTROL PANEL WIRE SCHEDULE
CK. M.P.ZOWACKI	
DES.AP. M.P.ZOWACKI	
ENG.AP. E.KLIMEK	
MFG.AP. N / R	
CAST.AP. N / R	
DATE 7/12/13	
S.O. D11200M10	
SCALE N.T.S.	
SIMILAR TO	
PROCESS SPEC	

THE CONTENTS OF THIS DOCUMENT ARE THE EXCLUSIVE PROPERTY OF FS-ELLIOTT CO., LLC AND CONTAIN CONFIDENTIAL AND PROPRIETARY INFORMATION AND MAY NOT BE USED, DISTRIBUTED OR DUPLICATED WITHOUT THE PRIOR WRITTEN CONSENT OF FS-ELLIOTT CO., LLC. THIS INFORMATION IS PROVIDED SUBJECT TO THE EXPRESS CONDITION THAT IT SHALL NOT BE USED, DISTRIBUTED OR DUPLICATED, IN WHOLE OR IN PART, OR USED FOR THE BENEFIT OF ANYONE OTHER THAN FS-ELLIOTT CO., LLC. FS-ELLIOTT CO., LLC HEREBY RESERVES ANY AND ALL RIGHTS AVAILABLE TO IT UNDER ANY AND ALL APPLICABLE LAWS, INCLUDING BUT NOT LIMITED TO, THOSE RIGHTS INCLUDED IN ANY CONFIDENTIALITY AGREEMENT BETWEEN THE RECIPIENT OF THIS INFORMATION AND FS-ELLIOTT CO., LLC.

ASSOCIATE PLANT IDENTIFICATION

SHEET 11 OF 12

FS-ELLIOTT

© 2015 FS–ELLIOTT COMPANY, LLC.

AUTOCAD GENERATED DRAWING

XC- SP1351 REV 16

SUPERSEDED BY

SUPERSEDES

XC-SP1351

MOUNTED LOW VOLTAGE STARTER PACKAGE (P300)

FEATURES	TAG NO.	FROM		TO		MATERIAL SPEC. NO.	WIRE GAUGE	WIRE COLOR	FRAME *
		ITEM	TERM	ITEM	TERM				
MAIN MOTOR (MM) WYE–DELTA	T1A,T1B	MAIN MOTOR	T1A, T1B	STARTER	T1	INCLUDED WITH MAIN MOTOR	N/A	BLK	3
	T2A,T2B	MAIN MOTOR	T2A, T2B	STARTER	T2		N/A	BLK	3
	T3A,T3B	MAIN MOTOR	T3A, T3B	STARTER	T3		N/A	BLK	3
	T4A,T4B	MAIN MOTOR	T4A, T4B	STARTER	T4		N/A	BLK	3
	T5A,T5B	MAIN MOTOR	T5A, T5B	STARTER	T5		N/A	BLK	3
	T6A,T6B	MAIN MOTOR	T6A, T6B	STARTER	T6		N/A	BLK	3
	G	MAIN MOTOR	G	STARTER	GRN	SEE NOTE 13	4	GRN/YEL	3
MAIN MOTOR (MM) SOLID STATE	T1A,T1B	MAIN MOTOR	T1A, T1B	STARTER	T1	INCLUDED WITH MAIN MOTOR	N/A	BLK	3
	T2A,T2B	MAIN MOTOR	T2A, T2B	STARTER	T2		N/A	BLK	3
	T3A,T3B	MAIN MOTOR	T3A, T3B	STARTER	T3		N/A	BLK	3
	T4A,T4B	MAIN MOTOR	T4A, T4B	STARTER	T2		N/A	BLK	3
	T5A,T5B	MAIN MOTOR	T5A, T5B	STARTER	T3		N/A	BLK	3
	T6A,T6B	MAIN MOTOR	T6A, T6B	STARTER	T1		N/A	BLK	3
	G	MAIN MOTOR	G	STARTER	GRN	SEE NOTE 13	4	GRN/YEL	3
MAIN DRIVE MOTOR STATUS	26	R1000 PANEL	TBDI 1	STARTER	TB1–6	SEE NOTE 9	14	BLU	3
			TBDI 2	STARTER	TB1–7		14	BLU	3
MAIN DRIVE MOTOR START/STOP SIGNAL	27	R1000 PANEL	TBDOAC 1	STARTER	TB1–3	SEE NOTE 9	14	RED	3
			TBDOAC 2	STARTER	TB1–4		14	RED	3
110 VAC POWER SUPPLY 1 PHASE	28	LVP	1	STARTER	TB1–LL1	SEE NOTE 9	14	RED	3
			X2	STARTER	TB1–LL2		14	WHT	3
			N/C	STARTER	N/C		14	GRN/YEL	3
POWER SUPPLY 3 PHASE	29	LVP	L1	STARTER	T1	SEE NOTE 15	14	RED	3
			L2	STARTER	T3		14	RED	3
			L3	STARTER	T5		14	RED	3
			GND	STARTER	GND		14	GRN/YEL	3

SOUND ENCLOSURE FAN PACKAGE (P300, P400, P500)

FEATURES	TAG NO.	FROM		TO		MATERIAL SPEC. NO.	WIRE GAUGE	WIRE COLOR	FRAME *
		ITEM	TERM	ITEM	TERM				
SOUND ENCLOSURE FAN ASS'Y. (SFV)	L1	SFV	L1	LVP	3L1	SEE NOTE 10	14	RED	3,4,5
	L2		L2	LVP	3L2			RED	3,4,5
	L3		L3	LVP	3L3			RED	3,4,5
	G		G	LVP	G			GRN/YEL	3,4,5
START/STOP CONTROL	11	LCP	11	LVP	1	SEE NOTE 10	14	RED	3,4,5
	12		12	LVP	6			WHT	3,4,5

OIL HEATER AND LOW OIL LEVEL SWITCH PACKAGE (P300, P400, P500, P600 & P700)

FEATURES	TAG NO.	FROM		TO		MATERIAL SPEC. NO.	WIRE GAUGE	WIRE COLOR	FRAME *
		ITEM	TERM	ITEM	TERM				
OIL HEATER LOLS ASS'Y. (OHA)	15	OHA	C	FSE SUPPLIED CABLE	PIN1		20	BLK	3,4,5,6,7
			NC		PIN2		20	WHT	3,4,5,6,7
					PIN4			SHLD	3,4,5,6,7
			L1(1)		1	SEE NOTE 10	14	RED	3,4,5,6,7
			L2(N)		X2		14	WHT	3,4,5,6,7
			GND		GND		14	GRN/YEL	3,4,5,6,7
			1L1		1L1	SEE NOTE 10	14	RED	3,4,5,6,7
			1L2		1L2		14	RED	3,4,5,6,7
			1L3		1L3		14	RED	3,4,5,6,7

OIL HEATER AND LOW OIL LEVEL SWITCH PACKAGE (P600+)

FEATURES	TAG NO.	FROM		TO		MATERIAL SPEC. NO.	WIRE GAUGE	WIRE COLOR	FRAME *
		ITEM	TERM	ITEM	TERM				
LOLS		LOLS	C	FSE SUPPLIED CABLE	PIN1	SEE NOTE 9	20	BLK	6+
			NC		PIN2		20	RED	6+
					PIN4			SHLD	6+
OIL HEATER ASSEMBLY. (OHA)		OIL HEATER	TBDOAC–23	LVP	1B	SEE NOTE 10	14	RED	6+
			TBDOAC–24		8		14	RED	6+
		LVP	1L1		L1	SEE NOTE 10	14	RED	6+
			1L2		L2		14	RED	6+
			1L3		L3		14	RED	6+
			GND		GND		14	GRN/YEL	6+
		OIL HEATER	TSTAT	LVP	1		14	RED	6+
			COIL		X2		14	WHT	6+

UNIT MOUNTED LOW VOLTAGE PANEL (ALL FRAMES)

FEATURES	TAG NO.	FROM		TO		MATERIAL SPEC. NO.	WIRE GAUGE	WIRE COLOR	FRAME *
		ITEM	TERM	ITEM	TERM				
AUX. OIL PUMP START/STOP	30	R1000 PANEL	TBDOAC 5	LVP	1	SEE NOTE 9	14	RED	3,4,5,6,7
			TBDOAC 6	LVP	2		14	RED	3,4,5,6,7
110 VAC POWER SUPPLY	31	R1000 PANEL	TBPOWER L	LVP	1	SEE NOTE 9	14	RED	3,4,5,6,7
			TBPOWER N	LVP	X2		14	WHT	3,4,5,6,7
			TBPOWER PE	LVP	GND		14	GRN/YEL	3,4,5,6,7

WIRING NOTES:

12. 10 AWG SINGLE CONDUCTOR – THHN/THWN/AWM/MTW STRANDED COPPER WIRE; 600 VOLT RATED INSULATION; 90°C DRY LOCATIONS, 75°C WET LOCATIONS, MOISTURE, HEAT, GASOLINE, AND OIL RESISTANT. APPLICABLE SPECIFICATIONS: UL AND CSA CERTIFIED. MOTOR SPACE HEATER CONTACT WIRING.

13. GROUND WIRE W4805–02–04 GREEN W/YELLOW STRIPE.

14. COORDINATED CIRCUIT PROTECTION AND DISCONNECT SWITCH IS TO BE PROVIDED BY CUSTOMER. DISCONNECTING MEANS SHALL BE LOCATED IN SIGHT FROM THE CONTROLLER AND SHALL DISCONNECT CONTROLLER FROM ALL POWER.
(CAUTION: ALL POWER MUST BE DISCONNECTED AND LOCKED OUT BEFORE WORKING INSIDE THE STARTER ENCLOSURE.)

15. 12 AWG SINGLE CONDUCTOR – THHN/THWN/AWM/MTW STRANDED COPPER WIRE; 600 VOLT RATED INSULATION; 90°C DRY LOCATIONS, 75°C WET LOCATIONS, MOISTURE, HEAT, GASOLINE, AND OIL RESISTANT. APPLICABLE SPECIFICATIONS: UL AND CSA CERTIFIED.

CHANGE	DESCRIPTION
6	ADD LVP-AOP WIRE SCHEDULE REVISE CABLES 26, 27 & 29 MCGREGOR 10/2/14
7	SEE ECN14-593 MCGREGOR 12/16/14
8	SEE ECN15-37 MCGREGOR 1/22/15
9	SEE ECN15-196 N.DERRINGER 4/16/2015
10	SEE ECN15-400 M.SEIBEL 8/13/15
11	SEE ECN15-466 M.SEIBEL 9/29/15
12	SEE ECN15-470 M.SEIBEL 10/5/15
13	SEE ECN15-483 M.SEIBEL 10/13/15
14	SEE ECN15-497 M.SEIBEL 10/21/15
15	SEE ECN15-507 M.SEIBEL 10/21/15
16	SEE ECN16-10 M.J.BRILL 1/15/16

DR. MCGREGOR	R1000 CONTROL PANEL
CK. M.P.ZOWACKI	WIRE SCHEDULE
DES.AP. M.P.ZOWACKI	
ENG.AP. E.KLIMEK	
MFG.AP. N/R	
CAST.AP. N/R	
DATE 7/12/13	
S.O. D11200M10	
SCALE N.T.S.	
SIMILAR TO	
PROCESS SPEC	ASSOCIATE PLANT IDENTIFICATION
	SHEET 12 OF 12

THE CONTENTS OF THIS DOCUMENT ARE THE EXCLUSIVE PROPERTY OF FS-ELLIOTT CO., LLC AND CONTAIN CONFIDENTIAL AND PROPRIETARY INFORMATION AND MAY NOT BE USED, DISTRIBUTED OR DUPLICATED WITHOUT THE PRIOR WRITTEN CONSENT OF FS-ELLIOTT CO., LLC. THIS INFORMATION IS PROVIDED SUBJECT TO THE EXPRESS CONDITION THAT IT SHALL NOT BE USED, DISTRIBUTED OR DUPLICATED, IN WHOLE OR IN PART, OR USED FOR THE BENEFIT OF ANYONE OTHER THAN FS-ELLIOTT CO., LLC. FS-ELLIOTT CO., LLC HEREBY RESERVES ANY AND ALL RIGHTS AVAILABLE TO IT UNDER ANY AND ALL APPLICABLE LAWS, INCLUDING BUT NOT LIMITED TO, THOSE RIGHTS INCLUDED IN ANY CONFIDENTIALITY AGREEMENT BETWEEN THE RECIPIENT OF THIS INFORMATION AND FS-ELLIOTT CO., LLC.

FS-ELLIOTT

© 2015 FS–ELLIOTT COMPANY, LLC.

AUTOCAD GENERATED DRAWING

XC- SP1351 REV 16

SUPERSEDED BY

SUPERSEDES

TP1663

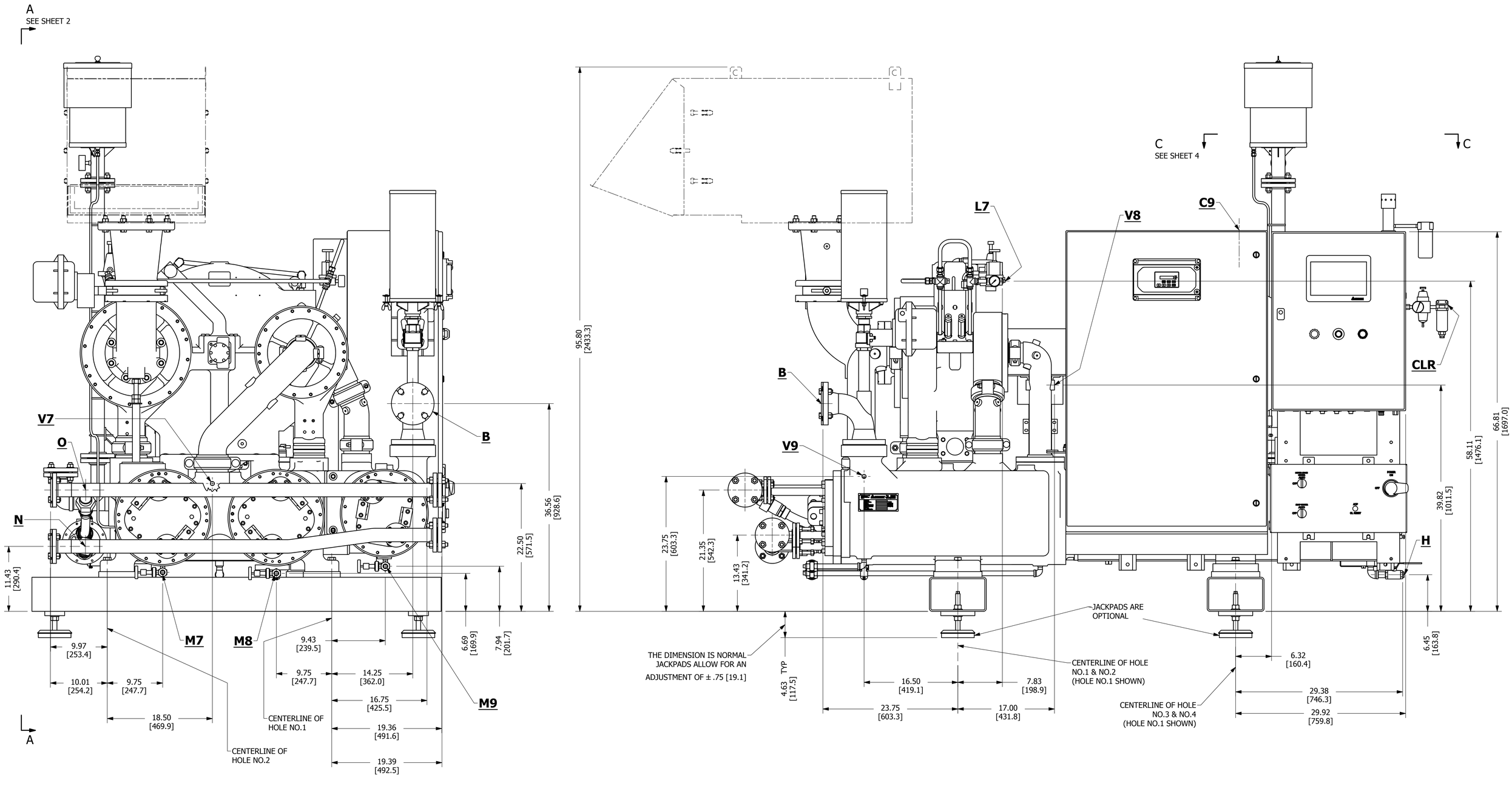

REVISION HISTORY

REV	DESCRIPTION	ZONE	AP
1	ON SHEET 1, ZONE "B-8" DIMS WERE 95.00 & 36.44 ADDED 57.44 DIM TO SHEET 2. ON SHEET 2 IN ZONE "B-2" DIM WAS 32.59. B.AIRGOOD 1/27/2014		

UNLESS OTHERWISE NOTED DIMENSIONS ARE IN INCHES.
DIMENSIONS SHOWN IN BRACKETS [ ] ARE IN MILLIMETERS

WORKING TOLERANCES UNLESS OTHERWISE SPECIFIED

CASTING			MACHINING	FABRICATION
CLASS 1	CLASS 2	CLASS 3	± .01 THRU 2.00 ± .015 OVER 2.00 THRU 10.00 ± .03 OVER 10.00	± .12 THRU 24.00 ± .24 OVER 24.00
± .06 THRU 6.00 ± .12 OVER 6.00 THRU 12.00 ± .18 OVER 12.00 THRU 24.00 ± .24 OVER 24.00 ADD .04 FOR PARTING SPLIT	± .12 THRU 6.00 ± .24 OVER 6.00 THRU 24.00 ± .38 OVER 24.00 THRU 60.00 ± .50 OVER 60.00 ADD .06 FOR PARTING SPLIT	± .24 THRU 24.00 ± .38 OVER 24.00 THRU 60.00 ± .50 OVER 60.00 ADD .12 FOR PARTING SPLIT		

PROCESS SPEC:

ANGLES THRU 1/4" ± 2˚ - ANGLES OVER 1/4" ± 1/2˚

SURFACE ROUGHNESS

MACHINING	CASTING
125 MICRO-INCHES	C -

DRILLED HOLES WITHOUT DEPTH SPECIFIED IS A THRU HOLE.
WHEN DEPTH IS NOT SPECIFIED FOR ⌊__⌋ SPOTFACE, MINIMAL CLEANUP IS REQUIRED

THIRD ANGLE PROJECTION

DR: B.AIRGOOD
CK: D.SMITH
SUP. AP: N/R
ENG. AP: M.TURSKY
AP: N/R
AP: N/R
DATE: 7/21/2014
S.O.: D11200M10
ASSY:
SIMILAR TO:

UNIT OUTLINE

R1000 3 STAGE PNEUMATIC & ELECTRIC VALVES
W STARTER PANEL, WO SOUND ENCLOSURE

USED ON: P300

THE CONTENTS OF THIS DOCUMENT ARE THE EXCLUSIVE PROPERTY OF FS-ELLIOTT CO., LLC AND CONTAIN CONFIDENTIAL AND PROPRIETARY INFORMATION AND MAY NOT BE USED, DISTRIBUTED OR DUPLICATED WITHOUT THE PRIOR WRITTEN CONSENT OF FS-ELLIOTT CO., LLC. THIS DOCUMENT IS PROVIDED SUBJECT TO THE EXPRESS CONDITION THAT IT SHALL NOT BE USED, DISTRIBUTED OR DUPLICATED, IN WHOLE OR IN PART, OR USED FOR THE BENEFIT OF ANYONE OTHER THAN FS-ELLIOTT CO., LLC. FS-ELLIOTT CO., LLC HEREBY RESERVES ANY AND ALL RIGHTS AVAILABLE TO IT UNDER ANY AND ALL APPLICABLE LAWS, INCLUDING BUT NOT LIMITED TO, THOSE RIGHTS INCLUDED IN ANY CONFIDENTIALITY AGREEMENT BETWEEN THE RECIPIENT OF THIS INFORMATION AND FS-ELLIOTT CO., LLC.

FS-ELLIOTT®

© 2014 FS-ELLIOTT CO., LLC

INVENTOR GENERATED DRAWINGS

SCALE:
SHEET: 1 OF 4

SIZE	DRAWING	REV
E	TP1663	1

TP1663

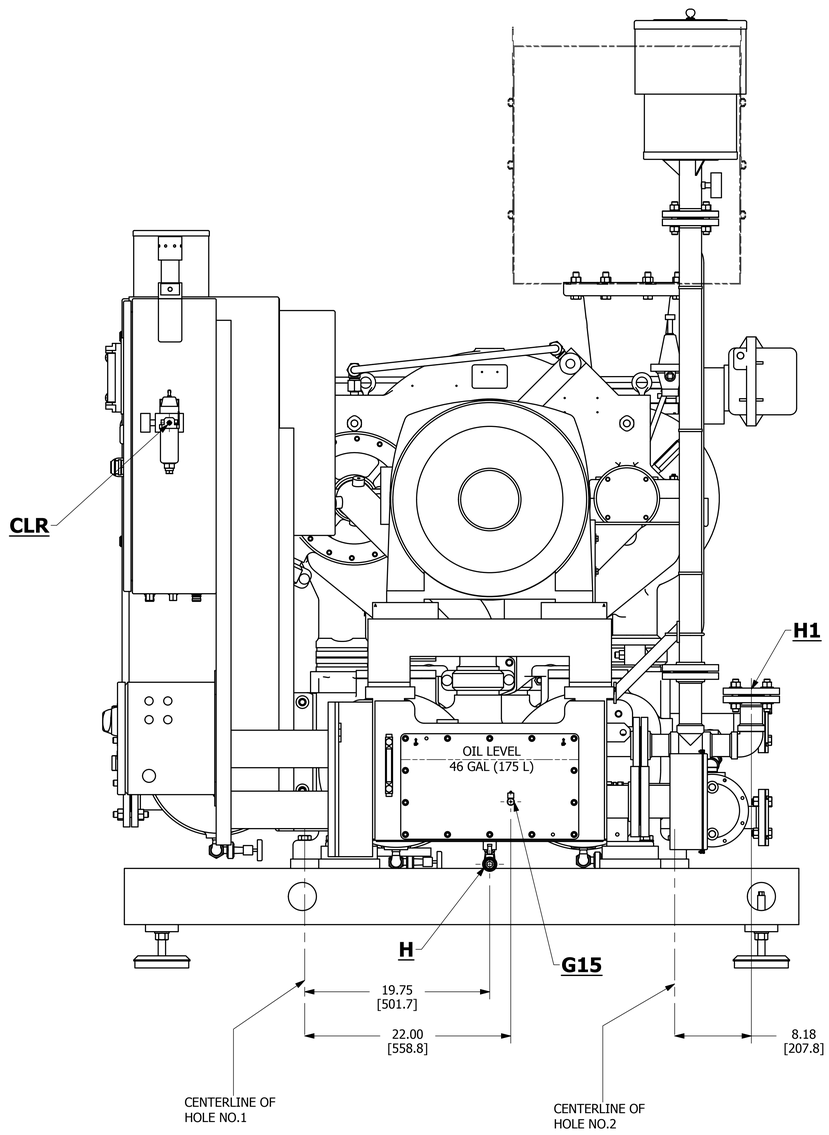

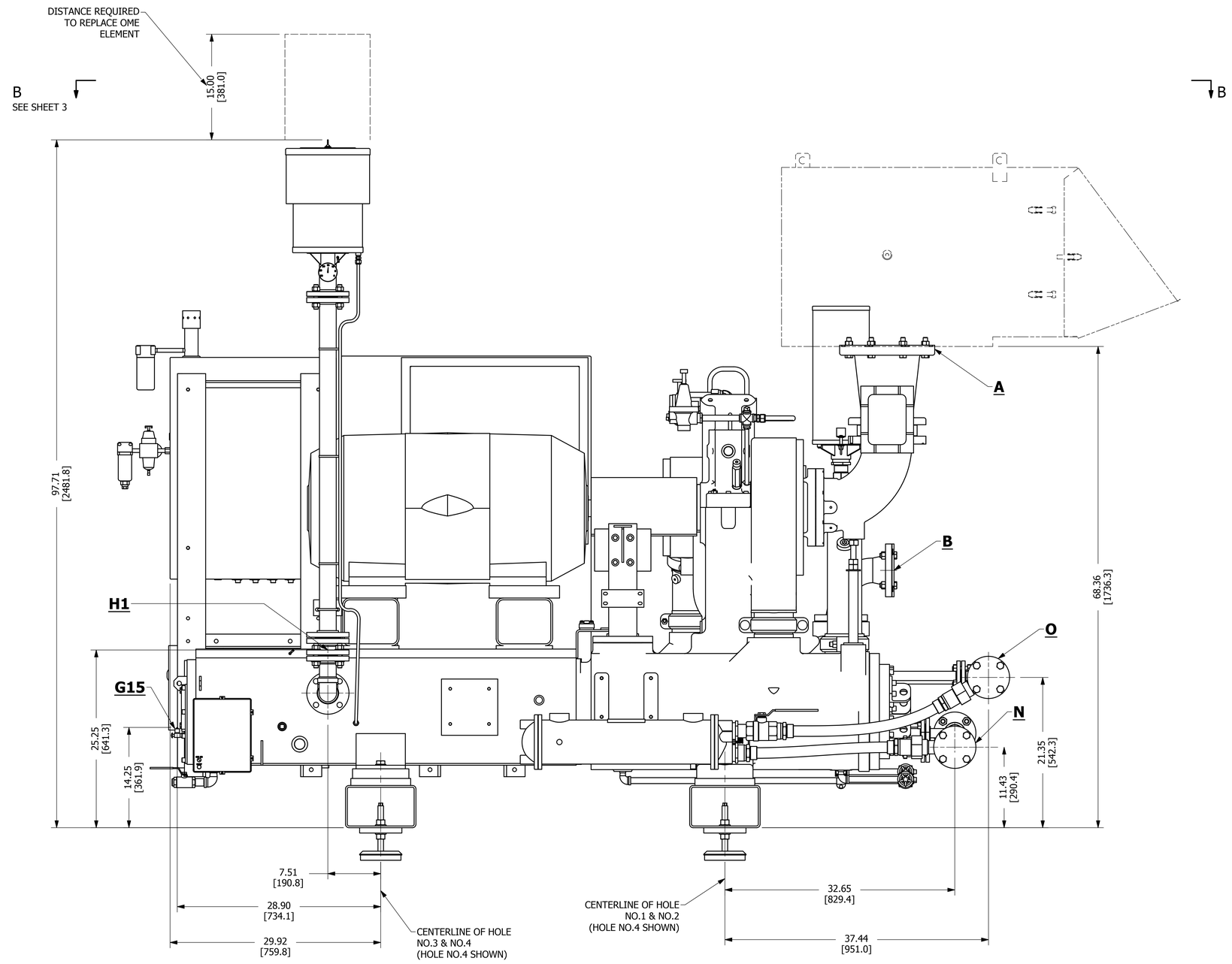

VIEW A-A
SCALE .16 : 1

REVISION HISTORY

REV	DESCRIPTION	ZONE	AP
1	SEE SHEET 1 FOR DETAILS.		

UNIT OUTLINE

R1000 3 STAGE PNEUMATIC & ELECTRIC VALVES
W STARTER PANEL, WO SOUND ENCLOSURE

USED ON: P300

CK: D.SMITH
DATE: 7/21/2014
S.O.: D11200M10
ASSY:
SIMILAR TO:

THE CONTENTS OF THIS DOCUMENT ARE THE EXCLUSIVE PROPRIETY OF FS-ELLIOTT CO., LLC AND CONTAIN PROPRIETARY INFORMATION AND MAY NOT BE USED, DISTRIBUTED OR DUPLICATED WITHOUT THE PRIOR WRITTEN CONSENT OF FS-ELLIOTT CO., LLC. THIS INFORMATION IS PROVIDED SUBJECT TO THE EXPRESS CONDITION THAT IT SHALL NOT BE USED, DISTRIBUTED OR DUPLICATED, IN WHOLE OR IN PART, OR USED FOR THE BENEFIT OF ANYONE OTHER THAN FS-ELLIOTT CO., LLC. FS-ELLIOTT CO., LLC HEREBY RESERVES ANY AND ALL RIGHTS AVAILABLE TO IT UNDER ANY AND ALL APPLICABLE LAWS, INCLUDING BUT NOT LIMITED TO, THOSE RIGHTS INCLUDED IN ANY CONFIDENTIALITY AGREEMENT BETWEEN THE RECIPIENT OF THIS INFORMATION AND FS-ELLIOTT CO., LLC.

SCALE:
SHEET: 2 OF 4

FS-ELLIOTT

© 2014 FS-ELLIOTT CO., LLC

INVENTOR GENERATED DRAWINGS

SIZE	DRAWING	REV
E	TP1663	1

TP1663

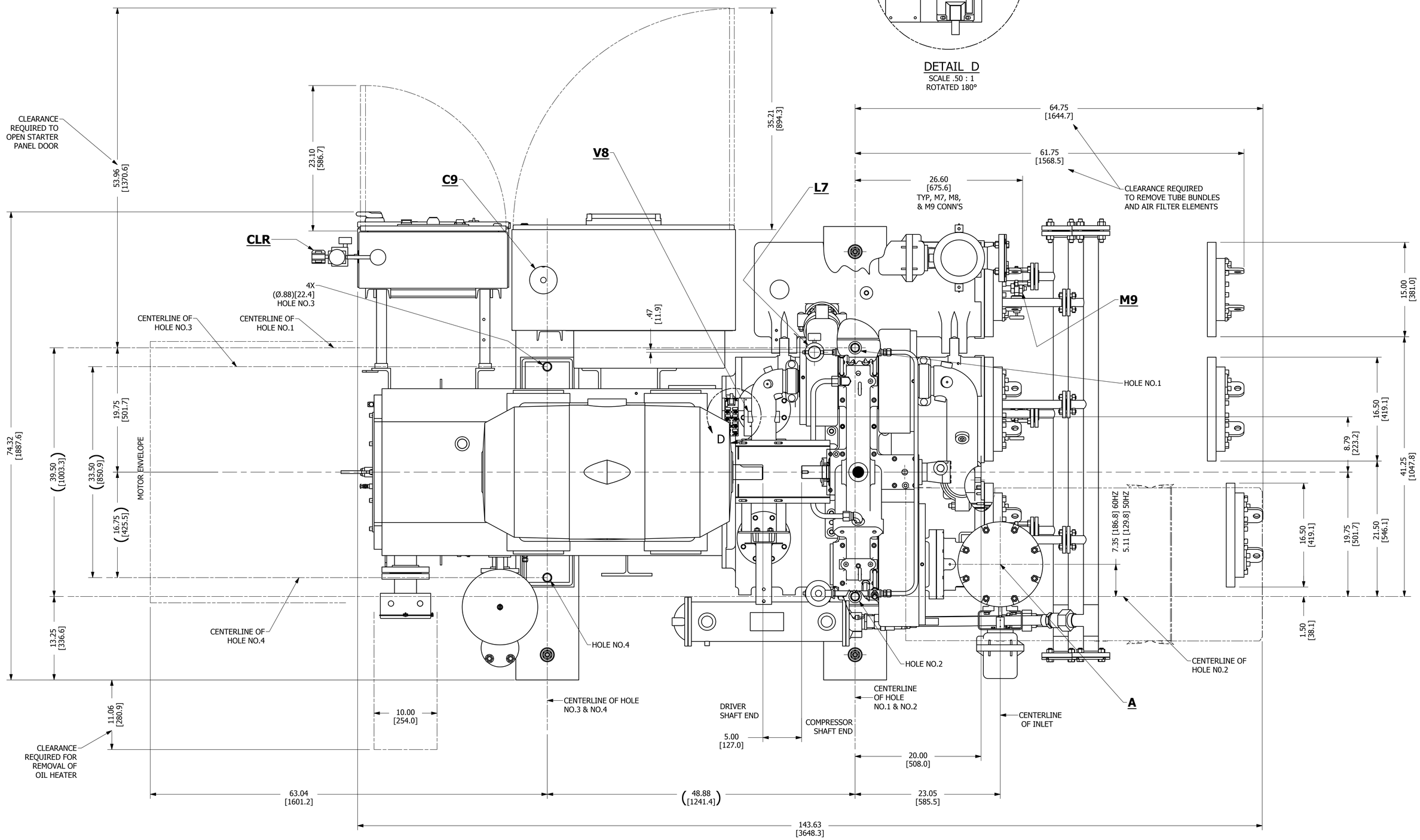

VIEW B-B
SCALE .18 : 1

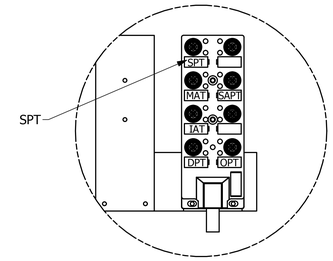

DETAIL D
SCALE .50 : 1
ROTATED 180°

REVISION HISTORY			
REV	DESCRIPTION	ZONE	AP
1	SEE SHEET 1 FOR DETAILS.		

UNIT OUTLINE

R1000 3 STAGE PNEUMATIC & ELECTRIC VALVES
W STARTER PANEL, WO SOUND ENCLOSURE

USED ON: P300

CK: D.SMITH
DATE: 7/21/2014
S.O.: D11200M10
ASSY:
SIMILAR TO:

THE CONTENTS OF THIS DOCUMENT ARE THE EXCLUSIVE PROPERTY OF FS-ELLIOTT CO., LLC AND CONTAIN CONFIDENTIAL AND PROPRIETARY INFORMATION AND MAY NOT BE USED, DISTRIBUTED OR DUPLICATED WITHOUT THE PRIOR WRITTEN CONSENT OF FS-ELLIOTT CO., LLC. THIS INFORMATION IS PROVIDED SUBJECT TO THE EXPRESS CONDITION THAT IT SHALL NOT BE USED, DISTRIBUTED OR DUPLICATED, IN WHOLE OR IN PART, OR USED FOR THE BENEFIT OF ANYONE OTHER THAN FS-ELLIOTT CO., LLC. FS-ELLIOTT CO., LLC HEREBY RESERVES ANY AND ALL RIGHTS AVAILABLE TO IT UNDER ANY AND ALL APPLICABLE LAWS, INCLUDING BUT NOT LIMITED TO, THOSE RIGHTS INCLUDED IN ANY AGREEMENT OR ANY AGREEMENT BETWEEN THE RECIPIENT OF THIS INFORMATION AND FS-ELLIOTT CO., LLC.

SCALE:
SHEET: 3 OF 4

FS-ELLIOTT

© 2014 FS-ELLIOTT CO., LLC

INVENTOR GENERATED DRAWINGS

SIZE	DRAWING	REV
E	TP1663	1

TP1663

SYMBOL	DESCRIPTION	NOMINAL SIZE	OD FLG	DIA BC	HOLE SIZE	NO. HOLES	FLG THK	RAISED FACE DIA & HEIGHT	REMARKS
A	COMPRESSOR INLET	8"-150	13.50[342.9]	11.75[298.5]	1.12[28.4]	8	.88[22.4]	10.62[269.7] X .06[1.5]	
B	COMPRESSOR DISCHARGE	3"-150	7.50[190.5]	6.00[152.4]	.94[23.9]	4	.94[23.9]	5.00[127.0] X .06[1.5]	
C2	FIELD WIRING ENTERANCE	Ø.88 [22.4]	AC WIRING						
C2-1	FIELD WIRING ENTERANCE	Ø.88 [22.4]	DC WIRING						
C3	FIELD WIRING ENTERANCE	Ø.88 [22.4]	HCI WIRING						
C9	FIELD WIRING ENTERANCE	4.38 [111.1]	STARTER PANEL POWER SUPPLY						
CLR	PANEL COOLING SYSEM	1/4" NPT	25 SCFM @ 80 TO 125 PSI (CLEAN DRY AIR)						
CWS	COOLING WATER SOLENOID	Ø.88 [22.4]							
G15	OIL SAMPLING VALVE	1/4" NPT							
H	OIL RESERVOIR DRAIN	3/4" NPT	MALE (CAPPED)						
H1	OIL FILL CONNECTION	2" -150							
L7	SUPPLY PRESSURE	(SEE NOTE 7)							
M7	INTERCOOLER DRAIN (L.P.)	1/2" NPT							
M8	INTERCOOLER DRAIN (H.P.)	1/2" NPT							
M9	AFTERCOOLER DRAIN	1/2" NPT							
N	COOLING WATER INLET	2" -150							
O	COOLING WATER OUTLET	2" -150							
SPT	SYSTEM AIR PRESSURE	PINN CONN.							
V7	DRAIN TRAP VENT CONNECTION	1/2" NPT	REQUIRED IF OPTIONAL DRAIN TRAPS ARE USED						
V8	DRAIN TRAP VENT CONNECTION	1/2" NPT	REQUIRED IF OPTIONAL DRAIN TRAPS ARE USED						
V9	DRAIN TRAP VENT CONNECTION	1/2" NPT	REQUIRED IF OPTIONAL DRAIN TRAPS ARE USED						

NOTES:

1. THE COMPRESSOR AIR INLET PIPING SHOULD BE CONSTRUCTED OF MATERIALS THAT ARE CORROSION RESISTANT OR HAVE SUITABLE INTERNAL COATING.

2. COMPRESSOR AIR INLET MUST BE PROTECTED AGAINST ENTRY OF ABRASIVE OR CORROSIVE MATERIALS, WATER & SNOW.

3. APPROXIMATE WEIGHT OF UNIT LESS DRIVER: 8300 LB [3765 KG].

4. FOR DRIVER WEIGHT, DIMENSIONS & CONNECTIONS SEE DRIVER DATA SHEET.

5. ALL CONNECTING PIPING & HARDWARE MUST BE SUPPLIED BY PURCHASER.

6. ALL FLANGE BOLT HOLES TO STRADDLE CENTERLINES.

7. L7 AIR SUPPLY CONNECTION: CUSTOMER TO SUPPLY CLEAN, DRY AIR AT PRESSURE AND FLOW BELOW:
- PNEUMATIC ACTUATED CONTROL VALVES: 1/2" NPT, 29 SCFM AT 70 TO 125 PSIG
- ELECTRIC ACTUATED CONTROL VALVES: 3/8" NPT, 10 SCFM AT 10 TO 125 PSIG

8. ALL DIMENSIONS ± .50 [12.7] UNLESS OTHERWISE STATED.

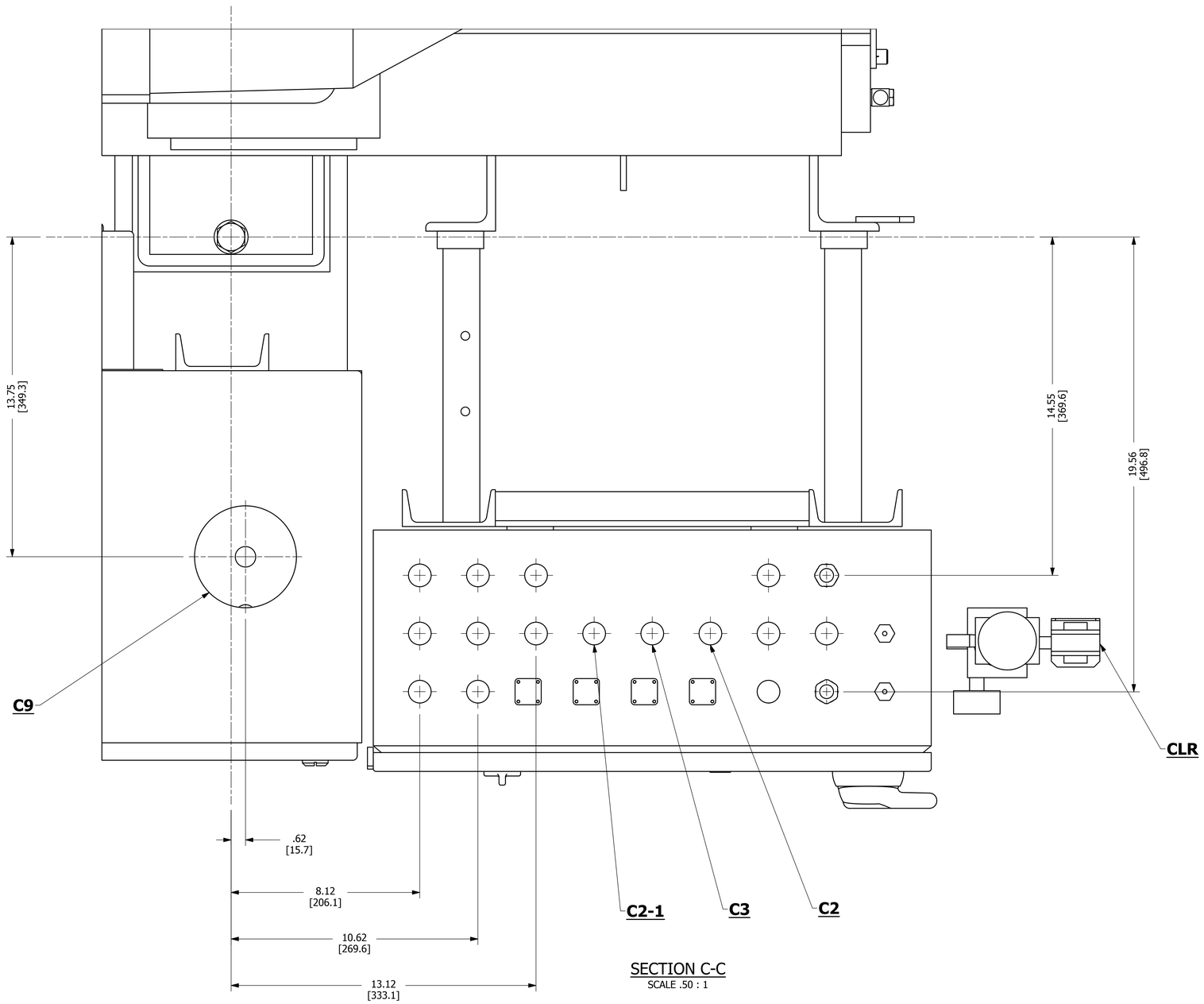

SECTION C-C
SCALE .50 : 1

REVISION HISTORY

REV	DESCRIPTION	ZONE	AP
1	SEE SHEET 1 FOR DETAILS.		

UNIT OUTLINE
R1000 3 STAGE PNEUMATIC & ELECTRIC VALVES
W STARTER PANEL, WO SOUND ENCLOSURE

USED ON: P300

CK: D.SMITH
DATE: 7/21/2014
S.O.: D11200M10
ASSY:
SIMILAR TO:

THE CONTENTS OF THIS DOCUMENT ARE THE EXCLUSIVE PROPERTY OF FS-ELLIOTT CO., LLC AND CONTAIN TRADE SECRET AND PROPRIETARY INFORMATION AND MAY NOT BE USED, DISTRIBUTED OR DUPLICATED WITHOUT THE PRIOR WRITTEN CONSENT OF FS-ELLIOTT CO., LLC. THIS INFORMATION IS PROVIDED SUBJECT TO THE EXPRESS CONDITION THAT IT SHALL NOT BE USED, DISTRIBUTED OR DUPLICATED, IN WHOLE OR IN PART, OR USED FOR THE BENEFIT OF ANYONE OTHER THAN FS-ELLIOTT CO., LLC. FS-ELLIOTT CO., LLC HEREBY RESERVES ANY AND ALL RIGHTS AVAILABLE TO IT UNDER ANY AND ALL APPLICABLE LAWS, INCLUDING BUT NOT LIMITED TO, THOSE RIGHTS INCLUDED IN ANY CONFIDENTIALITY AGREEMENT BETWEEN THE RECIPIENT OF THIS INFORMATION AND FS-ELLIOTT CO., LLC.

FS-ELLIOTT®

© 2014 FS-ELLIOTT CO., LLC

INVENTOR GENERATED DRAWINGS

SCALE:
SHEET: 4 OF 4

SIZE	DRAWING	REV
E	TP1663	1

TP2246

NOTES:

1. ✳ INDICATED SHIPPED LOOSE ITEMS THAT ARE SUPPLIED BY FS-ELLIOTT COMPANY AND ARE MOUNTED, PIPED AND WIRED BY CUSTOMER.
2. ✳✳ INDICATES ITEMS THAT ARE SUPPLIED, MOUNTED OR PIPED AND WIRED BY THE CUSTOMER.
3. SEE UNIT OUTLINE FOR LETTER DESIGNATED CUSTOMER CONNECTION SIZES AND LOCATIONS.

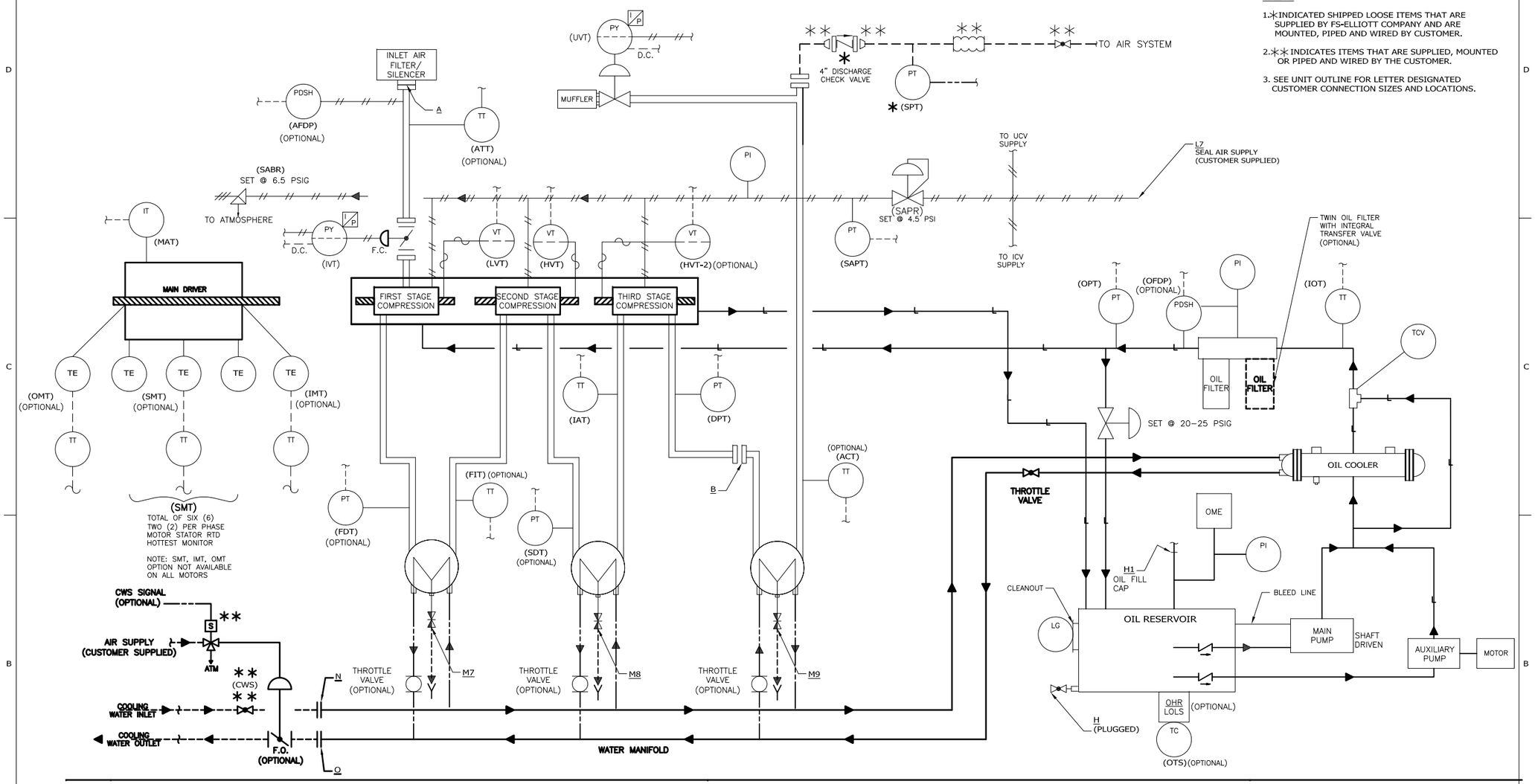

LEGEND

- FS-ELLIOTT WATER PIPING
- FS-ELLIOTT LUBE PIPING
- FS-ELLIOTT COMPRESSOR AIR PIPING
- CUSTOMER PIPING/TUBING
- FS-ELLIOTT CONTROL PIPING
- CUSTOMER CONTROL WIRING
- FS-ELLIOTT WIRING
- ELECTROMAGNETIC SIGNAL (GUIDED)
- ELECTROMAGNETIC SIGNAL (NOT GUIDED)
- EXPANSION JOINT
- OPEN DRAIN
- V-NOTCH VALVE FOR CONTINUOUS DRAIN
- OHR LOLS — OIL RESERVOIR HEATER/LOW OIL LEVEL SWITCH
- M — ELECTRIC ACTUATOR
- TRAP
- HEAT EXCHANGER
- GLOBE VALVE
- PRESSURE CONTROL VALVE
- INLET GUIDE VANE
- CHECK VALVE
- PRESSURE RELIEF VALVE
- THERMOSTATIC CONTROL VALVE
- INTERIOR PANEL MOUNTED INSTRUMENT
- UNIT MOUNTED INSTRUMENT
- BALL VALVE
- BUTTERFLY VALVE

INSTRUMENT ABBREVIATIONS

LG – LEVEL GUAGE
LSL – LEVEL SWITCH (LOW)
TE – RTD
VT – VIBRATION TRANSMITTER
LSH – LEVEL SWITCH (HIGH)
PS – PRESSURE TRANSMITTER
PSL – PRESSURE SWITCH (LOW)
PY – CURRENT TO PRESSURE TRANSDUCER
TC – TEMPERATURE CONTROLLER
IT – CURRENT TRANSMITTER
TT – TEMPERATIRE TRANSMITTER
TCV – TEMPERATURE CONTROL VALVE
PI – PRESSURE INDICATOR
PDSH – DIFFERENTIAL PRESSURE SWITCH
TSH – TEMPERATURE SWITCH (HIGH)

DEVICE NOMENCLATURE

PACKAGES	SYMBOL	DESCRIPTION
STANDARD PACKAGE	DPT	FINAL STAGE DISCHARGE PRESSURE TRANSMITTER
	HVT	HIGH SPEED PINION VIBRATION
	LVT	LOW SPEED PINION VIBRATION
	IAT	FINAL INTERSTAGE TEMPERATURE RTD / TRANSMITTER
	IOT	INLET OIL TEMPERATURE RTD / TRANSMITTER
	IVT	INLET VALVE ACTUATOR
	MAT	MOTOR AMP TRANSMITTER
	OPT	OIL INLET PRESSURE TRANSMITTER
	SAPT	SEAL AIR PRESSURE TRANSMITTER
	UVT	UNLOADING VALVE ACTUATOR
	SPT	SYSTEM AIR PRESSURE TRANSMITTER
OIL RESERVOIR HEATER & LEVEL SWITCH PACKAGE	LOLS	LOW OIL LEVEL PROTECTION
	OHR/OTS	OIL RESERVOIR HEATER/OIL RESERVOIR HEATER THERMOSTAT
FILTER MONITORING PACKAGE	AFDP	INLET AIR FILTER DIFFERENTIAL PRESSURE SWITCH
	OFDP	OIL FILTER DIFFERENTIAL PRESSURE SWITCH
COOLING WATER SIGNAL	CWS	COOLING WATER SOLENOID VALVE SIGNAL (CONTROL SIGNAL ONLY IS STANDARD)
MOTOR TEMPERATURE PACKAGE	SMT	MOTOR STATOR TEMPERATURE RTD / TRANSMITTER
	IMT	MOTOR INBOARD BEARING TEMPERATURE RTD / TRANSMITTER
	OMT	MOTOR OUTBOARD BEARING TEMPERATURE RTD / TRANSMITTER
INTERSTAGE SENSING PACKAGE	ACT	AFTERCOOLER AIR TEMPERATURE RTD / TRANSMITTER
	FIT	FIRST INTERSTAGE TEMPERATURE RTD / TRANSMITTER
	FDT	FIRST STAGE DISCHARGE PRESSURE TRANSMITTER
	SDT	SECOND STAGE DISCHARGE PRESSURE TRANSMITTER
ADDITIONAL VIBRATION PROBE PKG	HVT-2	HIGH SPEED VIBRATION (3RD STAGE)
AMBIENT AIR PACKAGE	ATT	AMBIENT AIR TEMPERATURE TRANSMITTER

OPTIONAL INTERCOOLER DRAIN TRAP

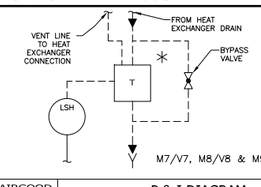

REV	DESCRIPTION	ZONE	AP
0A	NO REVISIONS REQD TO DRAWING DUE TO FILTER MONITORING PACKAGE ADDITION		

REVISION HISTORY

DR: B.AIRGOOD
CK: M.TURSKY
SUP. AP: N/R
ENG. AP: M.TURSKY
AP: N/R
AP: N/R
DATE: 9/11/2014
S.O.: D11200M10
SIMILAR TO:

P & I DIAGRAM
3 STAGE W/ R1000 PANEL
(PNEUMATIC VALVES)

USED ON: P300

THIS DRAWING AND ALL INFORMATION SHOWN THEREON IS THE EXCLUSIVE PROPERTY OF FS-ELLIOTT COMPANY, LLC AND IS PROVIDED SUBJECT TO THE EXPRESS CONDITION THAT THE DRAWING IS NOT TO BE REPRODUCED IN WHOLE OR IN PART, OR USED FOR THE BENEFIT OF ANYONE OTHER THAN FS-ELLIOTT COMPANY, LLC, AND NO INFORMATION SHOWN IN THIS DRAWING MAY BE DISCLOSED OR USED IN ANY WAY.

© 2014 FS-ELLIOTT COMPANY, LLC

INVENTOR GENERATED DRAWINGS

SCALE: NTS	SIZE E	DRAWING TP2246	REV 0A
SHEET: 1 OF 1			