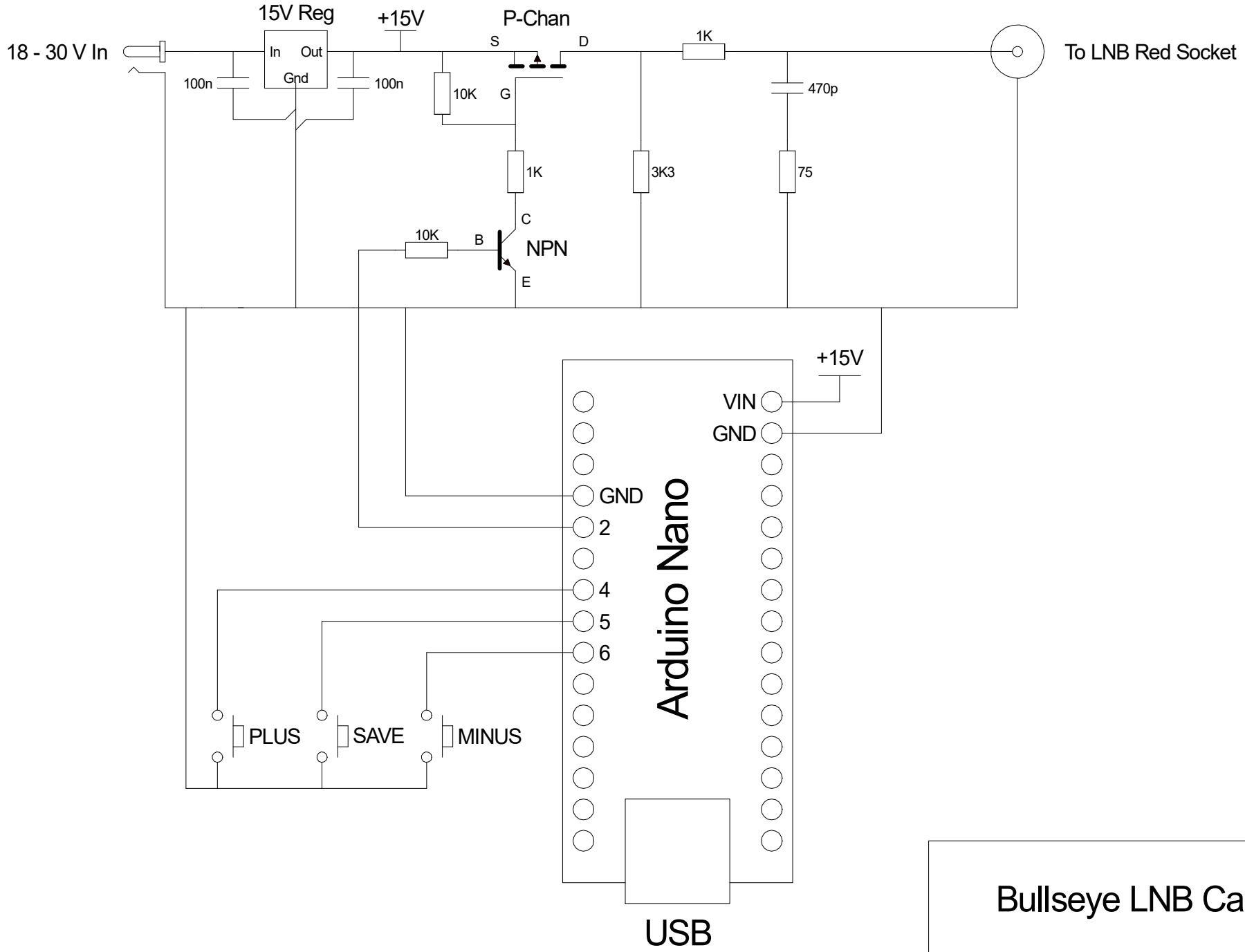

Bullseye LNB Calibrator

schematic.skf	10/06/21	cJd