PWR(LIN SBC)

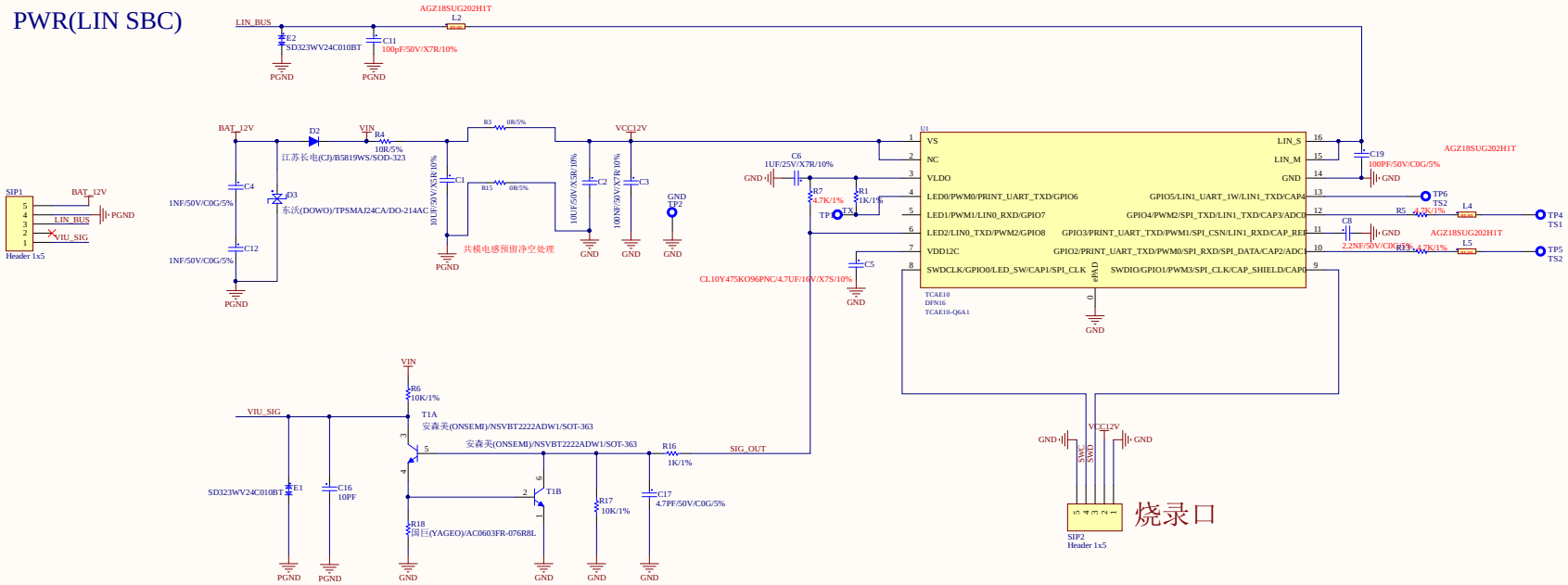
LIN_BUS
AGZ18SUG202H1T
L2
E2
SD323WV24C010BT
C11
100pF/50V/X7R/10%
PGND
BAT_12V
D2
VIN
R4
10R/5%
江苏长电(CJ)/B5819WS/SOD-323
R3
0R/5%
VCC12V
C4
1NF/50V/C0G/5%
D3
东沃(DOWO)/TPSMAJ24CA/DO-214AC
C12
C1
10UF/50V/X5R/10%
R15
C2
10UF/50V/X5R/10%
C3
100NF/50V/X7R/10%
共模电感预留净空处理
GND
TP2
SIP1
Header 1x5
LIN_BUS
VIU_SIG
U1
TCAE10
DFN16
TCAE10-Q6A1
VS
NC
VLDO
LED0/PWM0/PRINT_UART_TXD/GPIO6
LED1/PWM1/LIN0_RXD/GPIO7
LED2/LIN0_TXD/PWM2/GPIO8
VDD12C
SWDCLK/GPIO0/LED_SW/CAP1/SPI_CLK
LIN_S
LIN_M
GND
GPIO5/LIN1_UART_1W/LIN1_TXD/CAP4
GPIO4/PWM2/SPI_TXD/LIN1_TXD/CAP3/ADC0
GPIO3/PRINT_UART_TXD/PWM1/SPI_CSN/LIN1_RXD/CAP_REF
GPIO2/PRINT_UART_TXD/PWM0/SPI_RXD/SPI_DATA/CAP2/ADC1
SWDIO/GPIO1/PWM3/SPI_CLK/CAP_SHIELD/CAP0
C6
1UF/25V/X7R/10%
R7
4.7K/1%
R1
1K/1%
TP1
TX
C5
CL10Y475KO96PNC/4.7UF/16V/X7S/10%
C19
100PF/50V/C0G/5%
TP6
TS2
R5
4.7K/1%
L4
TP4
TS1
C8
2.2NF/50V/C0G/5%
R12
4.7K/1%
L5
TP5
TS2
VIU_SIG
R6
10K/1%
T1A
安森美(ONSEMI)/NSVBT2222ADW1/SOT-363
T1B
R16
1K/1%
SIG_OUT
R17
10K/1%
C17
4.7PF/50V/C0G/5%
E1
C16
10PF
R18
国巨(YAGEO)/AC0603FR-076R8L
SIP2
Header 1x5
SWC
SWD
烧录口