3.1.5
AI generalization
ability of an AImodel(3.1.7)to adapt and perform well on previously unseen data during inference

3.1.6
AI method
type of AI model(3.1.7)

EXAMPLE1 Deep neural network.

EXAMPLE 2 K-nearest neighbour.

EXAMPLE3 Support vector machine.

3.1.7
AI model
construct containing logical operations,arithmetical operations or a combination of both to generate an inference or prediction based on input data or information without being completely defined by human knowledge

Note 1 to entry:Inference is using a model to understand the relation between predictors and a target.Prediction is using a model to generate a prediction (values close to the real seen or unseen targets)based on the inputs.

3.1.8
AI model validation
evaluation of the performance of different AI model(3.1.7)candidates through testing

Note 1 to entry:There are three terms,"AImodel validation","validation"and"safety validation",that aredistinguished in this document.AI model validation originates from the validation data used by the Al community,validation originates from classic system development and safety validation originates from the ISO 26262 series.

Note 2 to entry:The AI model validation is executed using the AI validation dataset.

3.1.9
AI post-processing
any processing that is applied to the output of an AI model (3.1.7) for the purpose of mapping the raw output/s to a more contextually relevant and consumable format

EXAMPLE1 A non-maximum suppression and thresholding for a bounding-box generation that serves to remove bounding boxes of low relevance and duplicates.

EXAMPLE2 The outputs of a mixture density network are combined with a physical model (ahybrid model).

Note 1 to entry:AI post-processing also includes any data conversion that is used to bring the output into a common format for better comparability.

Note 2 to entry:AI post-processing can have a positive or a negative impact on the safety-related properties of the output of the AI system (3.1.17).

3.1.10
AI predictability
ability of the AI system (3.1.17) to produce trusted predictions

Note 1 to entry:Trusted predictions means that the predications are accurate and that this claim is supported by statistical evidence.

3.1.11
AI pre-processing
any processing that is applied to the input of an AImodel(3.1.Z)

3.1.12
AI reliability
ability of the Alelement(3.1.3)to perform the AI task (3.1.18) without Alerror(3.4.1) under stated conditions and for a specified period of time

©ISO 2024-All rights reserved

3.1.13
AI resilience
ability of the Al element(3.1.3)to recover and continue performing the AI task (3.1.18)after the occurrence of an Al error(3.4.1).

3.1.14
AI robustness
ability to maintain an acceptable level of performance under the presence of semantically insignificant but reasonably expected changes to the input

EXAMPLE]In image datatheseinsignificant input changes can stem from naturally-induced imagecorruptions or sensor noise.

3.1.15
AI safety
absence of unreasonable risk(**3.3.10**)due to Al errors(3.4.1)caused by faultsand functional insufficiencies

Note 1 to entry:This definition only applies in the context of this document.The term"AI safety"is commonly understood to have a broader meaning which includes ethics,value alignment,long-term considerations,etc.

3.1.16
AI safety requirement
safety requirement(3.3.14) of an Alelement (3.1.3)

3.1.17
AI system
item or element that utilises one or more AImodels (3.1.7)

EXAMPLE An AI system consisting of the Al component(3.1.1)"deep neural network for bounding box generation (AI model)"and of the AI component"non-maximum suppressionalgorithm(Alpost-processing (3.1.9)Al component)".

Note 1 to entry:The AI system can use various AImethods (3.1.6)and can utilize different AI technologies (3.1.19).

Note 2to entry:The boundaries of the AI systemare determined during the definition ofAI system architecture.

Note 3 to entry:The AI system can contain one or more AI components.

Note 4 to entry:The term"AI system"serves in this document as the top level of abstraction of the content to be developed in conformity to the corresponding standard.As such it is possible in adistributed development that what one party considers to be an Al component,theother party considers to be an AI system,as for thelatter it represents the top level of the content they develop.

Note 5 to entry:See 6.3 for an elaborationof the relationship of the differentabstraction layers of the ISO 26262 series, ISO/IEC22989 and this document with each other.

3.1.18
AI task
action required by the Al element(3.1.3)to achieve a specific goal

Note 1 to entry:Examples of AI tasks include classification,regression,ranking,clustering and dimensionality reduction.

Note 2 to entry:The AI task can be seen as a semantic description of the AI model(3.1.7).

[SOURCE:ISO/IEC 22989:2022,3.1.35,modified—"task"has been replaced with "AI task","by the AI element"has been added,"<artificial intelligence>"has been removed;and the Notes to entries have been modified.]

3.1.19
AI technology
any technology used within the lifecycle of an AI system (3.1.17) to design,develop,train,test,validate and implement the AI model(3.1.7)

EXAMPLE Examples of AI technologies are provided in 6.6

©ISO 2024-All rights reserved

3.1.20
AI testing
testing the AI system (3.1.17)or AI model(3.1.7)to estimate the expected performance and generalization capability in the field

Note 1 to entry:The AI testing is executed using an Al test dataset.

Note 2 to entry:See also ISO 26262-1:2018,3.169.

3.1.21
AI system safety validation
confirmation that an AI safety requirement(3.1.16)allocated to the Al system(3.1.17)is fulfilled

Note 1 to entry:In other standards,validation indicates that requirements are suitable for the intended use.In this document,the term is intentionally used in a different way that is common in the ML community,i.e.to verify the implementation of the requirement.

3.1.22
bias
undesired,systematic difference in the AI systems(3.1.17)predictions with respect to particular classes of inputs incomparison with others due to potential incorrect learning process

EXAMPLE The classes of inputs can refer to images of objects and people in the context of computer vision.

Note 1 to entry:Bias can arise from an undesired systematic difference within the dataset,from limitations within the training process,or from limitations within the AImodel(3.1.7) capability itself to accurately reflect the dataset.

[SOURCE:ISO/IEC 22989:2022,3.5.4,modified —the definition was adapted to the AI context,Note 1 to entry was replaced,the EXAMPLE was added.]

3.1.23
control element
element (3.5.4) controlling the execution of the AI task(3.1.18)by theAl element(3.1.3)and other Al element-related operations like updates

Note 1 to entry:The control element can control non-AI elements as well.

3.1.24
data pre-processing
part of the AI workflow that transforms raw dataso they are usable as the input to create the AImodel(3.1.7)

Note 1 to entry:Pre-processing can include reformatting,removal of outliers and duplicates,and ensuring the completeness of the dataset.

3.1.25
encompassing system
item which contains the AI system(3.1.17)

3.1.26
ground truth
set of dataset annotations that are taken to be correct

Note 1 to entry:Individual annotations are derived from information external to the dataset.

Note 2 to entry:Individual annotations may be refined as new information becomes available.

[SOURCE:ISO/IEC 2382-37:2022,37.09.34]

©ISO 2024-All rights reserved

3.1.27
hyperparameter
parameters of the used AI technologies (3.1.19)that affect both the performance of the AI model(3.1.7)and its learning process

Note 1 to entry:Hyperparameters are selected prior to training and can be used to help estimate model parameters (3.1.35).

Note 2 to entry:Examples of hyperparameters include the number of network layers,the width of each layer,the type of activation function,the optimization method,the learning rate for neural networks,the choice of kernel function in a support vector machine,the number of leaves or the depth ofa tree,the number of clusters in K-means clustering,the maximum number of iterations of the expectation maximization algorithm and the number of Gaussians in a Gaussian mixture.

[SOURCE:ISO/IEC 22989:2022,3.3.4,modified—The term has been redefined to be applicable to all kinds of AI methods,not only machine learning.]

3.1.28
input space
set of possible input values

Note 1 to entry:See semantic input space(3.1.34) and syntactic input space(3.1.36) for ways an input space can be specified.

3.1.29
machine learning
ML
process of optimizing model parameters through computational techniques,such that the model's behaviour aligns with data or experience and enables prediction beyond the training set

EXAMPLE Learning from experience can meantrying to represent non-static data like simulation,reinforcement learning environment,etc.

[SOURCE:ISO/IEC 22989:2022,3.3.5,modified—"Reflects the data or experience"was replaced with "aligns with data or experience and enables prediction beyond the training set",the EXAMPLE was added.]

3.1.30
MLalgorithm
algorithm to optimizeparameters of a MLmodel(3.1.31) from data according to given criteria

EXAMPLE Consider solvinga univariate linear function $y=\theta_0+\theta_1 x$where y is an output or result,x is an input, θ_0 is an intercept (the value of y where x=0)and $\theta_1$is a weight.In ML,the process of determining the intercept and weights for a linear function is known as linear regression.

[SOURCE:ISO/IEC 22989:2022,3.3.6,modified—"determine"was replaced with "optimize".]

3.1.31
ML model
mathematical construct that generates an inference or prediction based on input data or information and comprises a functionality that is created by machine learning(3.1.29)

EXAMPLE If a univariate linear function ($y=\theta_0+\theta_1 x$)has been trained using linear regression,the resulting model can be$y=3+7x$.

Note 1 to entry:A MLmodel results from training based on a MLalgorithm(3.1.30).

[SOURCE:ISO/IEC 22989:2022,3.3.7,modified—"And comprises a functionality that is created by machine learning"was added to distinguish from other mathematical constructs.]

©ISO 2024-All rights reserved

3.1.32
ML model training

iterative process to optimize a MLmodel's (3.1.31)input and output behaviour on a given training dataset with the intention to improve its quality (e.g.Al accuracy,AI robustness (3.1.14),generalization capability, run time),based ona MLalgorithm(3.1.30)that can adapt ML model parameters,hyperparameters (3.1.27), cost function or the model structures itself

[SOURCE:ISO/IEC22989:2022,3.3.15,modified to elaborate the procedure and intention.]

3.1.33
safety-related AI element

Al element(3.1.3)that contributes to the achievement of an AI safety requirement (3.1.16)allocated to the AI system or can contribute to the violation of an AI safety requirement allocated to the AI system or can contribute to both

3.1.34
semantic input space

set of possible input values on asemantic level

EXAMPLE The semantic input space acquired bya camera sensor can be described as consisting ofstreet images containing lane markers of different colours,orientation and degradations that appear in different lighting and weather conditions.

Note 1 to entry:The semantic values correspond and conform to abstract semantic concepts expected within the input space.

3.1.35
semantic output space

set of possible output values on a semantic level

3.1.36
syntactic input space

set of possible input values ona syntactic level

EXAMPLE The syntactic input space acquired by a camera sensor can be described as an RGB image array of integers.

Note 1 to entry:The syntactic values can correspond and conform to the output values froma low-level sensor.

3.1.37
syntactic output space

set of possible output values on a syntactic level

3.1.38
trained ML model

ML model(3.1.31) with a set of model parameters as result of ML model training (3.1.32)

[SOURCE:ISO/IEC 22989:2022,3.3.14,modified—"ML model with a set of model parameters as"added as part of the term.]

3.2 Data-related definitions

3.2.1
AI test dataset

dataset used to estimate the performance and generalization capability of an AI model or an AI system

Note 1 to entry:See Clause 11 for more details.

3.2.2
AI validation dataset

dataset used to compare the performance of different candidate AI models (3.1.7)

©ISO 2024-All rights reserved

3.2.3
dataset insufficiency
insufficiency of the dataset regarding data-related safety properties under consideration

Note 1 to entry:Dataset insufficiency includes data integrity errors and data distribution errors.

3.2.4
field monitoring dataset
dataset collected after the release of the AI system (3.1.17) while the product is in operation and used specifically for field monitoring of the performance of theAI system

3.2.5
hybrid dataset
dataset comprising data elements that are both real-world data elements and synthetic data elements

3.2.6
in distribution data
data whose features relevant to the AI task (3.1.18) are present and sufficiently well represented in the training dataset

Note 1 to entry:In distribution,input does not guarantee correctness of AI model output.

3.2.7
metadata
data that provides additional information about the data element or dataset but is usually not directly involved in the training process

Note 1 to entry:Some metadata(e.g.ground truth)is also used for training.

3.2.8
out of distribution data
data containing features relevant for the AI task(3.1.18),either absent or not sufficiently well represented in the training dataset (3.2.12),that can result in an AI error (3.4.1)

Note 1to entry:Out of distribution (OOD)refers to data or inputs that fall outside the scope ofwhat an AI or MLmodel was trained on or is designed to handle.When an AI system encounters OOD data,it can struggle to make accurate predictions or decisions because it lacks the necessary knowledge and experience to handle such inputs effectively. 0OD data can lead to unexpected or unreliable model behaviour.

3.2.9
real-world dataset
dataset comprising data elements that have been created by real world acquisitions

3.2.10
safety-related KPI
key performance indicator relevant for the achievement of AI safety (3.1.15)

3.2.11
synthetic dataset
dataset comprising data elements that have been created artificially

Note 1 to entry:"Created artificially"implies that the data was not directly collected from something that happened in the real world.Additionally,the data does not necessarily represent something that already happened in the real world.

3.2.12
trainingdataset
dataset used to train an MLmodel(3.1.31)

[SOURCE:ISO/IEC 22989:2022,3.3.16,modified—definition reworked to contain the term "dataset"]

©ISO 2024-All rights reserved

3.3 General safety-related definitions

3.3.1
assurance
grounds for justified confidence that a claim has been or will be achieved

[SOURCE:ISO/IEC/IEEE15026-1:2019]

3.3.2
assurance argument
reasoned,auditable artefact created supporting the contention that its top-level claim (or set of claims)is satisfied,including systematic arguments,its underlying evidence and explicit assumptions that support the claim(S)

Note 1 to entry:An assurance argument contains the following and their relationships:

-one or more claimsabout properties;

— arguments that logically link the evidence and any assumptionsto the claim(s);

-a body of evidence and possible assumptions supporting these arguments for the claim(s);

— justification of the choice of top-level claim and the method of reasoning.

[SOURCE:ISO/IEC/IEEE15026-1:2019,modified—"argumentation"replaced with "arguments"]

3.3.3
claim
true-false statement about the limitations on the values of an unambiguously defined property—called the claim's property-and limitations on the uncertainty of the property's values falling within these limitations during the claim's duration of applicability under stated conditions

Note 1 to entry:Uncertainties may also be associated with the duration of applicability and the stated conditions.

Note 2 to entry:A claim can contain the following:

— property of the system-of-interest;

-limitations on the value of the property associated with the claim (e.g.on its range);

-limitations on the uncertainty of the property value meeting its limitations;

— limitations on the duration of the claim's applicability;

— duration-related uncertainty;

— limitations on conditions associated with the claim;

— condition-related uncertainty.

Note 3 to entry:The term"limitations"is used to fit the many situations that can exist.Values can be a single value or multiple single values,a range of values or multiple ranges of values,and can be multi-dimensional.The boundaries of these limitations are sometimes not sharp,e.g.they caninvolve probability distributions and can be incremental.

[SOURCE:ISO/IEC/IEEE15026-1:2019]

3.3.4
undesired safety-related behaviour at the vehicle level
hazardous behaviour,RFIM prevention issue(3.3.9) or malfunctioning behaviour that can cause a hazard

©ISO 2024-All rights reserved

3.3.5
hazard
potential source of harm

[SOURCE:ISO 26262-1:2018,3.75,modified—"caused bymalfunctioning behaviour of the item"and Note 1 to entry deleted.]

3.3.6
influencing factor
factor contributing to theachievement or the absence of a safety-related property(3.3.13)

3.3.7
misuse
usage in a way not intended by the manufacturer or the service provider

[SOURCE:ISO 21448:2022,3.17 modified—The Note to entry and EXAMPLEs were deleted.]

3.3.8
reasonably foreseeable indirect misuse
RFIM
reasonably foreseeable misuse which leads to a reduced controllability of the hazardous behaviour,to a potentially increased severity of an occurring accident or a combination of both

[SOURCE:ISO 21448:2022,3.17 modified—The term was taken from Note 5 to entry of 3.17 and is now explicitly defined.]

3.3.9
RFIM prevention issue
inability to prevent or detect and mitigate a reasonably foreseeable indirect misuse(3.3.8)

3.3.10
risk
combination of the probability of occurrence of harm and the severity of that harm

Note 1 to entry:Other forms of risk definitions exist,e.g.risk for other topics like the riskofa project to fail,etc.This document focuses on the risk regarding safety.Hence this definition was chosen.

Note 2 to entry:The resulting risk evaluation of an error of an Al component is typically equivalent to the evaluation of the potential to lead to a violation of a safety requirement allocated to the AI system.The evaluation can be quantitative as well as qualitative,depending on the safety requirement.

[SOURCE:ISO 26262-1:2018,3.128,modified-Notes 1 and 2 to entry were added.]

3.3.11
AI safety measure
activity or technical solution to avoid,detector control Al errors(3.4.1),to mitigate theirharmful effects or a combination thereof

EXAMPLE AI safety analysis.

Note 1 to entry:Safety measures include architectural measures.

Note 2 to entry:The Al safety measures include safety measures ofAlelements (3.1.3)as defined in the ISO 26262series as well as measures to address functional insufficiencies in conformity to ISO 21448(e.g.functional modifications addressing SOTIF-related risks).

©ISO 2024-All rights reserved

3.3.12
safety validation
assurance,based on examination and tests,that the safety goals are adequate and have been achieved with a sufficient level of integrity

Note 1 to entry:There are three terms,"AI model validation","validation"and "safety validation",that are distinguished in this document.AI model validation originates from the validation data used by the AI community, validation originates from classic system development and safety validation originates from the ISO 26262 series.The three validation meanings are not the same.

[SOURCE:ISO 26262-1:2018,modified-Note 1 to entry was replaced.]

3.3.13
safety-related property
property impacting safety

3.3.14
safety requirement
requirement related to safety

EXAMPLE1 SOTIF requirement.

EXAMPLE2 Functional safety requirement.

EXAMPLE3 Technical safety requirement.

Note 1 to entry:This includes,but is not limited to,safety requirements motivated by functionalsafety as well as SOTIE.

3.3.15
work product
work product of the safety lifecycle that can be used as evidence within a safety assurance argument

3.4 Safety:Root cause-,error-and failure-related definitions

3.4.1
AI error
one or more discrepancies between computed,observed or measured values or conditions of the Al element (3.1.3)and the true,specified or theoretically correct values or conditions of the Al element

Note 1 to entry:AnAl error can be a single discrepancy or a sequenceof discrepancies.

Note 2 to entry:AnAl error can be an error caused by a fault.Faults are typically addressed by the ISO 26262 series.

Note 3 to entry:AnAl error can be an output insufficiency caused by a functional insufficiency.

3.4.2
AI triggering condition
specific conditions of a scenario that serve as an initiator for a subsequent Al error(3.4.1)

Note 1 to entry:Functional insufficiencies or faults are themselves not AI triggering conditions but are potentially activated by them thus leading to the occurrence of an Al error.

3.4.3
contributing AI error
Al error(3.4.1)which can lead to a violation of an AI safety requirement (3.1.16) allocated to the AI system (3.1.17),either by itself or in combinationwith one or more other Al errors

3.4.4
AI error rate
probability density of Al error(3.4.1)occurrence divided by probability of no AI error occurring until the measuring point

Note 1 to entry:Measurement units can include errors per h,errors per km,etc.

©ISO 2024-Allrightsreserved

Note 2 to entry:This is an analogue definition to the failure rate.

3.4.5
functional insufficiency
insufficiency ofspecification (3.4.6)or performance insufficiency

Note 1 to entry:A functional insufficiency activated by a triggering condition leads,per definition,to either an output insufficiency,a hazardous behaviour,a RFIM prevention issue or a combination of these.

[SOURCE:ISO 21448:2022,3.8,modified-The EXAMPLEs,Figures and Notes to entry have been removed. Note to entry 1 has been added.]

3.4.6
insufficiency of specification
specification,possibly incomplete,contributing to either a hazardous behaviour or an RFIM prevention issue (3.3.9) when activated byone or more triggering conditions

Note 1 to entry:An insufficiency of specification activated by a triggering condition leads per definition to either an output insufficiency,a hazardous behaviour,an RFIM prevention issue ora combination ofthese.

Note 2to entry:More details can be found in 6.7.1.

[SOURCE:ISO 21448:2022,3.12,modified-The EXAMPLEs and Notes to entry have been removed.A new Note to entry has been added for clarification.]

3.4.7
output insufficiency
incorrect output ofan element as a result ofa triggering condition activating a functional insufficiency (3.4.5) of the element,contributingto either a hazardous behaviour,a RFIM prevention issue(3.3.9)or both

[SOURCE:ISO 21448:2022,3.8,modified-The term was taken from Note 6 to entry and explicitly defined.]

3.4.8
safety-related AI error
Alerror(3.4.1)of a safety-related Al element(3.1.33)

3.4.9
safety-related fault
fault of a safety-related AI element (3.1.3)

3.4.10
systematic error
error due to a systematic fault

3.5 Miscellaneous definitions

3.5.1
architectural measure
technical solution implemented by the Al element (3.1.3) to detect and mitigate or tolerate AI errors(3.4.1) in order to uphold the ability to execute the AI task (3.1.18) in a safe manner or to achieve or maintain a dedicated operating mode in case of Al errors without unreasonable risk (3.3.10)

EXAMPLE1 Addition of output layers in the AI model for classification.AI models can make incorrect predictions that can lead to hazardous behaviour.Therefore,it would be beneficial for a model to be cautious in situations where it is uncertain about its predictions.One way to accomplish this is to design AI models by adding output layer(s)to represent reject class or reject option.Such models assess their confidence in each prediction and have the option to abstain from making a prediction when they are likely to make incorrect predictions.

EXAMPLE2 Addition of redundant Al components(3.1.1).

Note 1 to entry:Architectural measures have a tangible impact on the AI system (3.1.17)or AI component and can enhance or modify the architecture of Al system or AI component.

©ISO 2024-All rights reserved

Note 2 to entry:If an architectural artefact is used during development [e.g.using a saliency map to argue the explainability of the system)butis removed for system deployment,this is not considered an architectural measure.

3.5.2
component
non-system level element that is logically or technically separable and is comprised of more than one hardware part or one or more software units or a combination of hardware part(s)and software unit(S)

EXAMPLE Amicrocontroller.

Note 1 to entry:A component is a part of a system.

[SOURCE:ISO 26262-1:2018,modified—"Or a combination of hardware part(s)and software unit(s)" was added.]

3.5.3
development measure
appropriate process step(s)(activity)for the development of an AI system (3.1.17)or an AI component(3.1.1) that facilitates fulfillingAI safety requirements(3.1.16) and/or enhancing the AI properties

Note 1 to entry:When analysing an AI system or Al component,specific activity used duringor after the training of the AI component can be a development measure.See 10.4 for moredetails.

3.5.4
element
system,components (system,hardware or software),hardware parts or software units

[SOURCE:ISO 26262-1:2018,modified—"System"added to the components and both Note 1 and Note 2 to entry removed.]

3.5.5
item
system or combination of systems,to which ISO 26262 is applied,that implements a function or part of a function at the vehicle level

[SOURCE:ISO 26262-1:2018,modified-Note 1 to entry removed.]

3.5.6
off-board
property indicating that a given task is external to the vehicle system

3.5.7
on-board
property indicating that agiventask is internal to the vehicle system

3.5.8
testing
process of planning,preparing and operating or exercising an item or element to verify that it satisfies specified requirements,to detect safety anomalies,to validate that requirements are suitable in the given context and to create confidence in its behaviour

Note 1 to entry:"To create confidence in its behaviour"also includes evaluating the performance ofthe element or item.

[SOURCE:ISO 26262-1:2018,modified-Note 1 to entry was added]

©ISO 2024-All rights reserved

3.5.9
validation
confirmation,through the provision of objective evidence,that the requirements for a specific intended use or application have been fulfilled

Note 1 to entry:There are three terms,"AI model validation","validation"and "safety validation",that are distinguished in this document.AI model validation originates from the validation data used by the AI community, validation originates from classic system development and safety validation originates from ISO 26262.The three validation meanings are not the same.

[SOURCE:ISO/IEC22989:2022,3.5.18,modified—Note 1 to entry was added]

3.5.10
verification
confirmation,through the provision of objective evidence,that specified requirements have been fulfilled

EXAMPLE The typical verification activitiescan be classifiedas follows:

— verification review,walk-through,inspection;

-verification testing;

— simulation;

— prototyping;

-analysis (safety analysis,control flow analysis,data flow analysis,etc.)

Note 1 to entry:Verification only provides assurance thata product conforms to its specification.

[SOURCE:ISO/IEC22989:2022,3.5.18,modified—EXAMPLE was added]

4 Abbreviated terms

ACP assurance claim point

ADS automated driving system

AI artificial intelligence

ASIL automotive safety integrity level

DFA dependent failure analysis

DLC dataset lifecycle

DNN deep neural network

E/E electrical/electronic

FMEA failure mode and effects analysis

FN false negative

FP false positive

FPS frames per second

GSN goal structuring notation

HARA hazard analysis and riskassessment

© ISO 2024-All rights reserved

HAZOP hazard and operability study

HMI human machine interface

KPI key performance indicator

ID in distribution

ML machine learning

NN neural network

ODD operational design domain

00D out of distribution

OTA over the air

PFD probability of failure on demand

PWM pulse width modulation

RFDM reasonably foreseeable direct misuse

RFIM reasonably foreseeable indirect misuse

SOTIF safety of the intended functionality

TN true negative

TP true positive

5 Requirements for conformity

5.1 Purpose

This clause describes how to:

a)achieve conformity to this document;

b)interpret the applicability of each clause;

c)interpret the tables and figuresused in this document.

5.2 General requirements

When claiming conformity to this document,each requirement shall be met,unless one ofthe following applies:

a)tailoring of the safety activities as defined in Clause 6 or in accordance with ISO 26262-2 has been performed that shows that the requirement does not apply;

b)a rationale is available that the non-conformity is acceptable,and the rationale has been evaluated in accordance with this document and ISO 26262-2,when applicable.

The results of safety activities are given as work products."Prerequisites"are information which shall be available as work products of a previous phase or from an external source.Given that certain requirements of a clause depend on the automotive safety integrity level (ASIL)or may be tailored,certain work products

©ISO 2024-All rights reserved

may not be needed as prerequisites.A summary of the normative parts of this document is provided in **Annex A.**

NOTE External sources are used in this document to refer to work products that are the result of activities outside of the defined AI safety lifecycle,such as input received from the development process of the encompassing system and interpretations of tables and figures.

Tables and figures can be normative or informative depending on their context.Tables and figures that are referenced by normative requirements are considered normative unless it is explicitly specified otherwise. Other tables and figures are only informative.

If it is possible to fulfil a requirement with a different combination of methods,a rationale is provided that the chosen combination of methods fulfil the requirement.

6 AI within the contextof roadvehicles system safety engineeringand basic concepts

6.1 Application of the ISO 26262 series for the development of AI systems

This document is intended to be applied in combination with the ISO 26262 series to specifically address the safety of AI systems.

-For AI components that are not AI models,or do not contain AI models,the ISO 26262 series can be applied by itself.

-For Al components that are AImodels,or that contain AI models,the ISO 26262 series can be tailored and applied in combinationwith this document (see Figure 6-1).

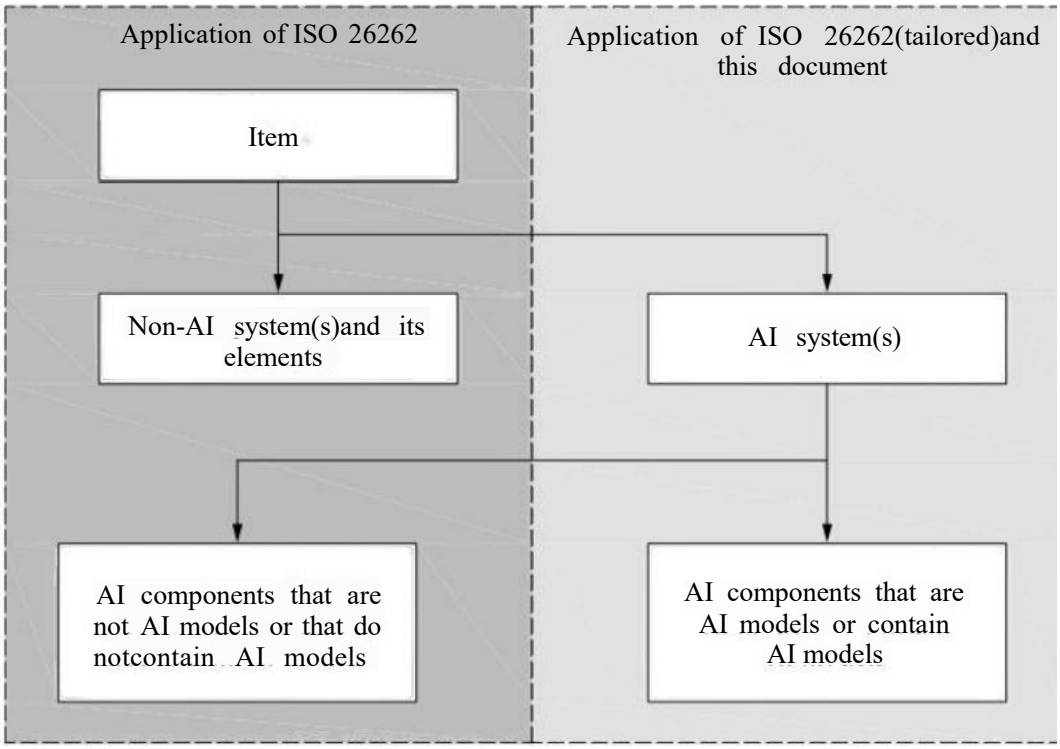

Figure 6-1-Visualizationof the applicability of the ISO 26262 series and this document to the item and its elements

NOTE See AnnexC for a possible tailoring of ISO 26262-4 and ISO 26262-6 for ML.

©ISO 2024-All rights reserved

6.2 Interactions with encompassing system-level safety activities

An example interaction of AI system development with the encompassing system development based on the ISO 26262 series and ISO 21448 can be found in Table 6-1 and in Table 6-2.These tables also include remarks regarding the interactionand the applicability of the corresponding standards with thisdocument and the development of the Al elements.

NOTE1 ISO 21448 is applicable to intended functionalities where proper situational awareness is essential to safety and where such situational awareness is derived from complex sensors and processing algorithms.This applies in particular tofunctionalities of emergency intervention systems and systems that have SAE levels of driving automation from 1 to 5.However,this document applies to allAI systems whose errors can impact safety independent of the vehicle-levelfunctionality.Systems can utilize Al technologies that do not fall within the scope of ISO 21448 but that do fall within the scope of this document.

NOTE2 Althoughthis document and ISO 21448 both focus on functional insufficiencies,conformity to onedoes not automatically imply conformity tothe other.

During the encompassing system architecture design phase,encompassing system requirements are decomposed and allocated to the AI systems as well as other elements of the encompassing system.

Table 6-1—Example interaction of the AI element development in conformity to this document and with the ISO 26262 series

ISO 26262:2018	Interaction of the AI system with the encompassing system (the AI system is not an item)	AI system:System component consisting of hardware and software components	AI component:Conventionala hardware component	Al component:AI model implemented by software component(s)
Part 2,Clause 5:Overall safety management		Adapted to also address the management of Al safety	Directly applicable	Adapted to also address the management of AI safety
Part 2,Clause 6:Project dependentsafety management	The management of the Al safety is part of the safety management of the encompassing system	Adapted to also address the management of AI safety	Directly applicable	Adapted to also address the management of AI safety
Part 2,Clause 7: Safety management regarding production, operation,service and decommissioning	The management of the Al safety is part of the safety management of theencompassing system	Adapted to also address the management of Al safety	Directly applicable	Adapted to also address the management of Al safety
Part 3,Clause 5: Item definition	Potential sourceof input space specification			
Part 3,Clause 6:Hazardanalysis and risk assessment				
Part 3,Clause 7:Functional safety concept	Potential source of safety requirements allocated to the AI system			
Part 4,Clause 6:Technical safety concept	Potential source of safety requirements allocated to the AI system	Applicable (tailoring can benecessary)	Hardware safety requirements are derived from technical safety requirements allocated to the AI system	Software safety requirements are derived from technical safety requirements allocated to the AI system
Conventional hardware is hardware that is not specifically designed to implement an AI model,e.g.CPUs,GPUs or FPGAs.				

©ISO 2024-All rights reserved

Table 6-1(continued)

ISO 26262:2018	Interaction of the AI system with the encompassing system (the AI system is not an item)	AI system:System component consistingof hardwareand software components	AI component:Conventionalahardware component	AI component:AI model implemented by software component(s)
Part 4,Clause 7:System and item integration and testing	Al system as a system component to be integratedinto the encompassing system	Integration of the hardware and software components of the AI system (tailoring can be necessary)		
Part 4,Clause 8:Safety validation	Potential source of additional validation strategies and requirements		—	
Part 5:Product development at the hardware level	Potential source of hardware safety requirements allocated to the Alelements	Applicable(tailoring can be necessary)	Applicable	Refinement of hardware-software interface
Par 6:Product development at the software level	Potential source of software safety requirementsallocated to the Al elements	Applicable (tailoring can be necessary)	Refinement of hardware-software interface	Applicable (tailoring can be necessary)
Part 7:Production, operation,service and decommissioning	AI elements can be part of the production process	Potential source of requirements and work products relevant for production,operation, service and decommissioning	Potential source of requirements and work products relevantfor production,operation, service and decommissioning	Potential source of requirements and work products relevant for production,operation, service and decommissioning
Conventional hardware is hardware that is not specifically designed to implement an AI model,e.g.CPUs,GPUs or FPGAs.				

Table 6-2-Example interactions with ISO21448

ISO 21448:2022,Clause	Interaction of the AI system development with encompassing system activities,motivated by ISO 21448:2022
Clause 5:Specification and design	Clause 5 activities: —provide the interfaces of the AI system with the encompassingsystem; determine the semantic input space; provide the functionality required by the AI system; provide safety requirements allocated to the Al system,including,but not limited to,safety-related KPIs. Activities of this document: provide triggering conditions and functional insufficiencies of the Al system; provide achieved safety-related KPIs; provide a description of deployment measures required to support the AI and data lifecycles.
Clause 6:Identification and evaluation of hazards	Clause 6 is a potential source of safety requirements,including,but notlimited to,safety-related KPIs,allocated to the AI system.

©ISO 2024-All rights reserved

Table 6-2(continued)

ISO 21448:2022,Clause	Interaction of the AI system development with encompassing system activities,motivated by ISO 21448:2022
Clause 7:Identification and evaluation of potential functional insufficiencies and potentialtriggering conditions	Clause 7 activities: a potential source of safety requirements allocated to the AI system; a potential source of AI triggering conditions. Activities of this document: provide potential triggering conditions of the AI system.
Clause 8:Functional modifications addressing SOTIF-related risks	Activities of this document: modification request to the encompassing system in case safety requirements allocated to the AI system cannot be fulfilled.
Clause 9:Definition ofthe verification and validation strategy	Clause 9 is a potential source of safety-related KPIs,allocated to the AI system.
Clause 10:Evaluationof known scenarios	Activities of thisdocument: provide triggering conditions of the AI system and the associated Al error modes,error patterns or a combination of both; provide achieved safety-related KPIs.
Clause 11:Evaluation of unknown scenarios	This document provides means to achieve safety-related KPIs.
Clause 12:Evaluation of the achievement of the SOTIF	This document provides a safety assurance argument for the Al systemwhich can be used within the evaluation of the achievement of the SOTIF.
Clause 13:Operation phase activities	This document provides the Al system requirements to the encompassing system regarding the operation phase.

During development and as part of continuous assurance activities during operation,it can become necessary to adjust the safety requirements allocated to the AI system leading to an iterative feedback cycle to the encompassing system safety concept and safety requirements.Iterations of the requirements are triggered for example if:

-an AI system that is capable of fulfilling its assigned safety requirements and associated safety-related properties cannot be feasibly developed (e.g.due to inherent performance limitations in the ML algorithm used);

—suitable training data and test data cannot be found;

-evidence to demonstrate that the safety requirements and associated safety-related properties are fulfilled cannot be collected with sufficient confidence.

In each of these cases,changes to the encompassing system safety concept can be defined,leading to a set of updated,realisable requirements on the AI system.

NOTE3 Measures on the encompassing system safety concept to reduce the safety load of an Al system towards better feasibilitycan be(see also 10.5):

— restrictions inthe ODD;

—implementation of diversity such as different processing algorithms or sensing modalities;

-implementation of redundancysuch as multiple hardware components in parallel;

©ISO 2024-All rights reserved

— a combination of the aforementioned measures.

Once the AI system has reached an adequate level of performance in relation to the safety requirements,the AI system can be integrated into the encompassing system including evidence to support the achievement of the safety requirements.This can result in the need for further iterations of the AI safety life cycle,for example,due to the following conditions:

—Integration tests of the encompassing system reveal previously undiscovered faults or functional insufficiencies in the AI system that requireadditional development cycles.

-The encompassing system assurance case requires additional evidence to support safety claims related to theAI system that require additional effort to collect the required evidence.

Collected field data and observations made during operation related to the performance of the AI system (e.g.increased number of false positive errors under certain traffic conditions or an increased rate of out-of-distribution inputs)can indicate changes in the input space.It may not be possible to address these changes by refining the safety requirements on the AI system or through additional development activities.Changes may need to be made at the encompassing system level.This can lead to changes in the safety requirements assigned to the AI system anda repetition of the safety life cycle.

6.3 Mapping of abstractionlayers between the ISO26262 series,ISO/IEC22989 and this document

The ISO 26262 series uses the following levels of abstraction:item,system,component,software unit and hardware part.The relationship between these is visualized in Figure 6-2(ISO 26262-10:2018,Figure 3). It is typically used when a given requirement can be applied on different levels of abstraction,e.g.on hardware components as well as on hardware parts.An example item composition is shown in Figure 6-3 (ISO 26262-10:2018,Figure 4).

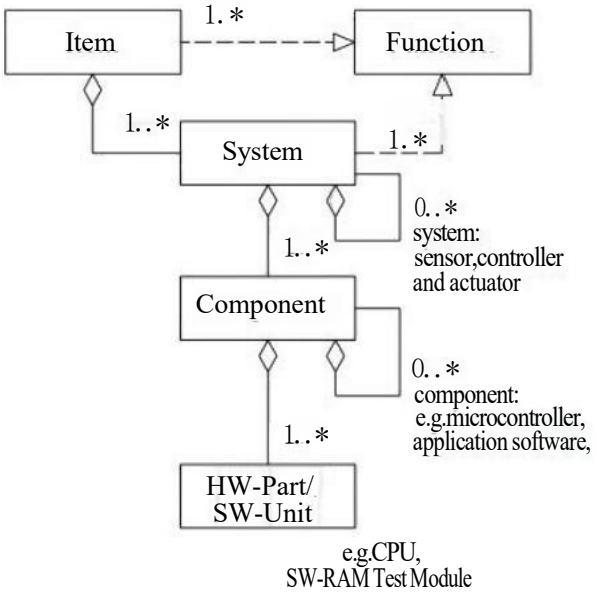

Key

realization:one instance is realized by another instance(e.g.a function or part of a function is realized by an item)

aggregation:one instance has a set of other instances (e.g.a system has a set ot components)

NOTE1 Depending on the context,the term “element"can apply to the entities "system”,"component”,"hardware part"and "software unit"in this chart,according to ISO 26262-1:2018,3.41.

NOTE2 "*"means N elements are possible,where Nis a positive integernumber.

Figure 6-2-Relationship of item,system,component,hardware partand software unit

©ISO 2024-All rights reserved

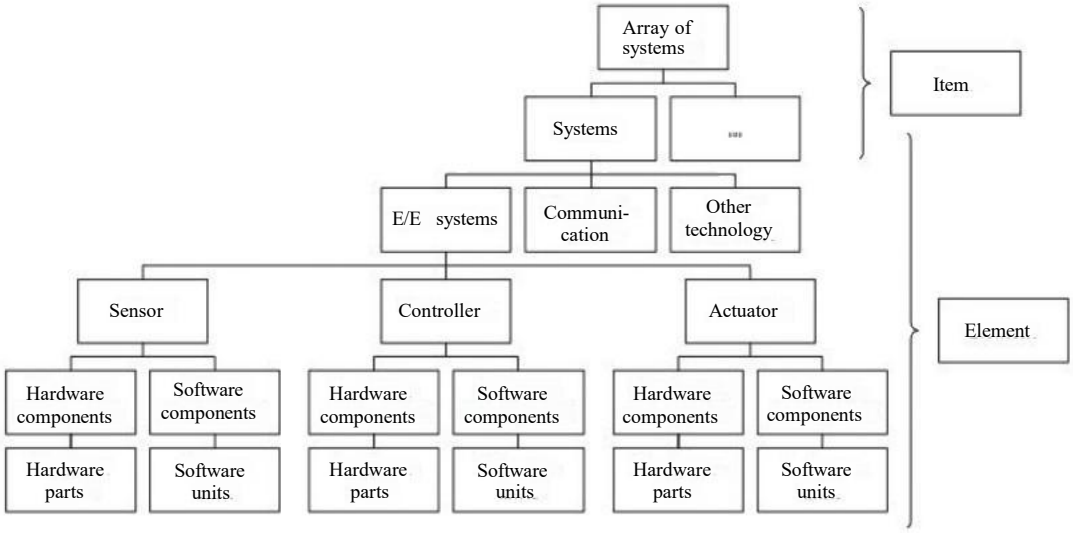

Figure 6-3-Example item composition

ISO/IEC 22989 uses the following abstraction layers:AI system and AI components,where the AI system consists of AI components.ISO/IEC 22989 does not explicitly state if a given AI component can itself consist of AI components.In this document this is possible.The Al component can be an AI model,a conventional element,i.e.an element not considered to be an AI model,or a combination of both.The AI system contains at least one AI model and realizes the AI task.Figure6-4 uses the same notation as Figure 6-2 to visualise the relationship between AI system and AI components.

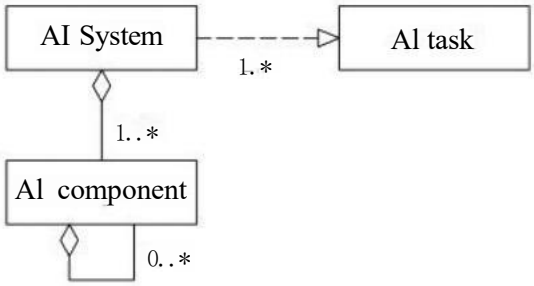

Key

realization:one instance is realized by another instance

aggregation:one instance has a set of other instances

NOTE1 Depending on the context,the term"AI element"can apply to "AI system"and"AI component".

NOTE 2 "*"means N elements are possible,where Nis a positive integernumber.

Figure 6-4-Relationship of AI system and AI component

This document uses terms from both ISO/IEC22989and ISO 26262-1.The terms from the different standards do not map one-to-one.So,depending on the context,multiple mappings are possible as shown in Table 6-3.

©ISO 2024-All rights reserved