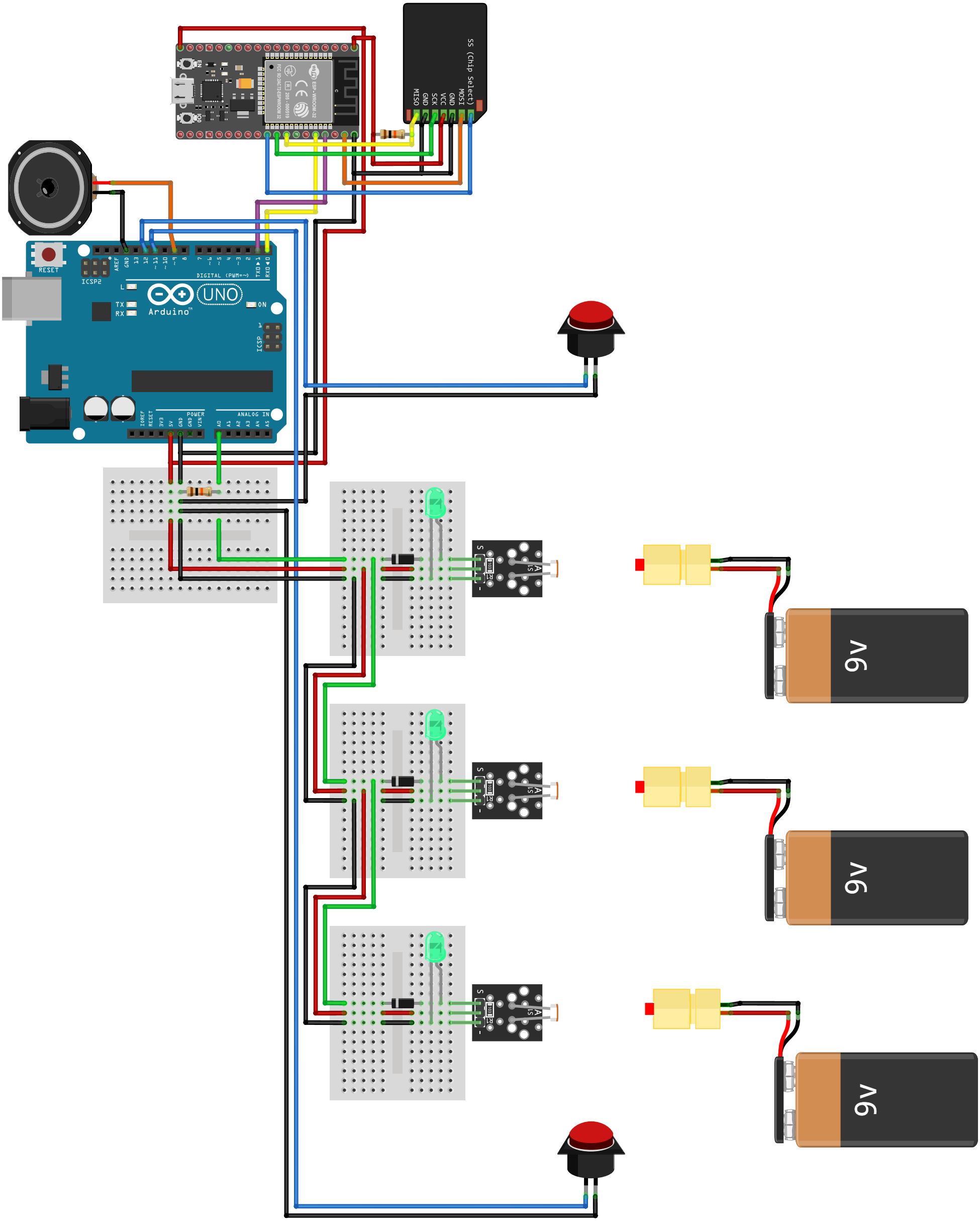
SS (Chip Select)
MOSI
GND
VCC
SCK
GND
MISO
ESP-WROOM-32
RESET
ICSP2
DIGITAL (PWM=~)
UNO
Arduino
ICSP
POWER
ANALOG IN
9v
9v
9v

fritzing

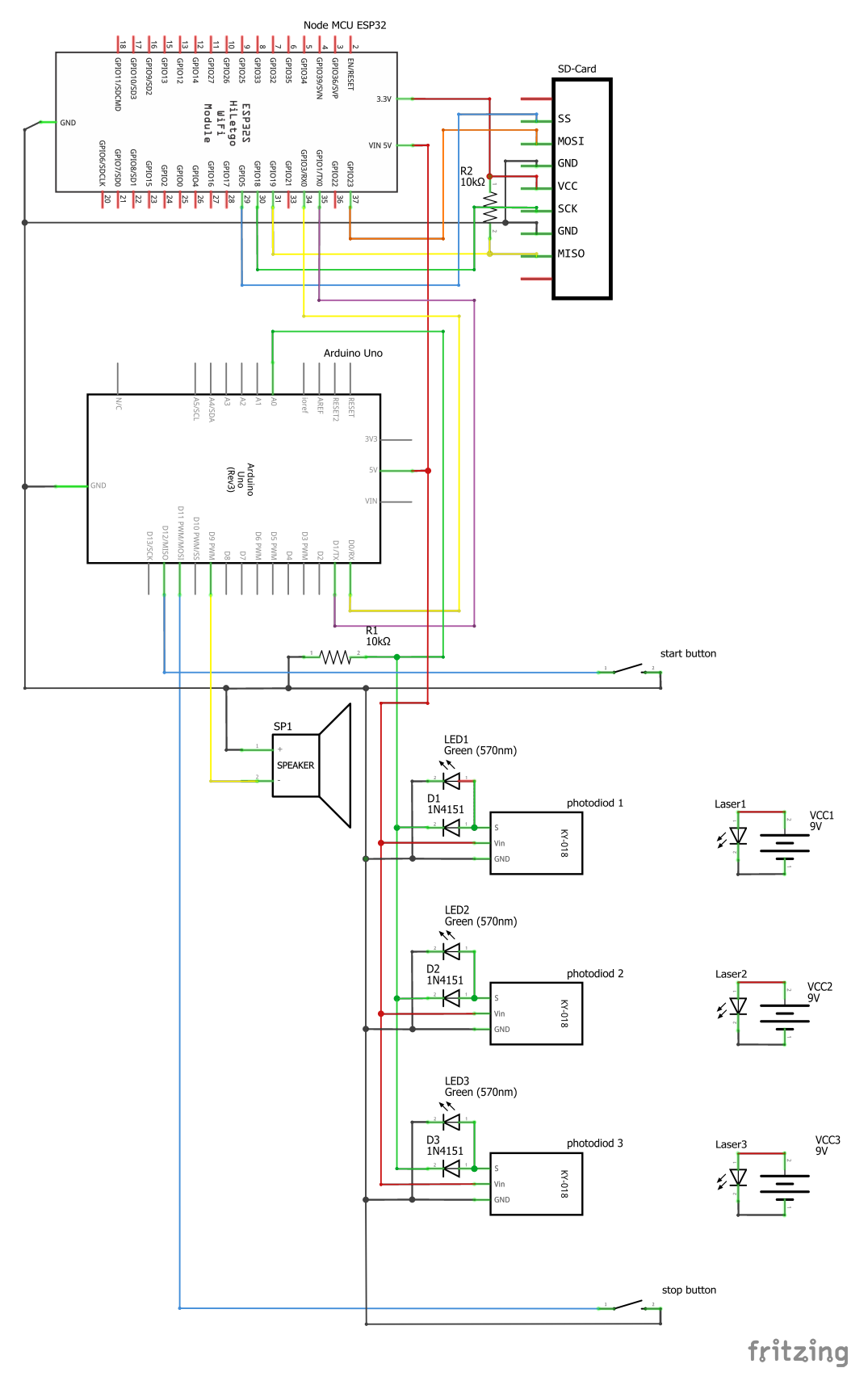
Node MCU ESP32
ESP32S HiLetgo WiFi Module
GND
3.3V
VIN 5V
SD-Card
SS
MOSI
GND
VCC
SCK
GND
MISO
R2
10kΩ
Arduino Uno
Arduino Uno (Rev3)
GND
3V3
5V
VIN
R1
10kΩ
start button
SP1
SPEAKER
LED1
Green (570nm)
D1
1N4151
photodiod 1
KY-018
Laser1
VCC1
9V
LED2
Green (570nm)
D2
1N4151
photodiod 2
KY-018
Laser2
VCC2
9V
LED3
Green (570nm)
D3
1N4151
photodiod 3
KY-018
Laser3
VCC3
9V
stop button
fritzing