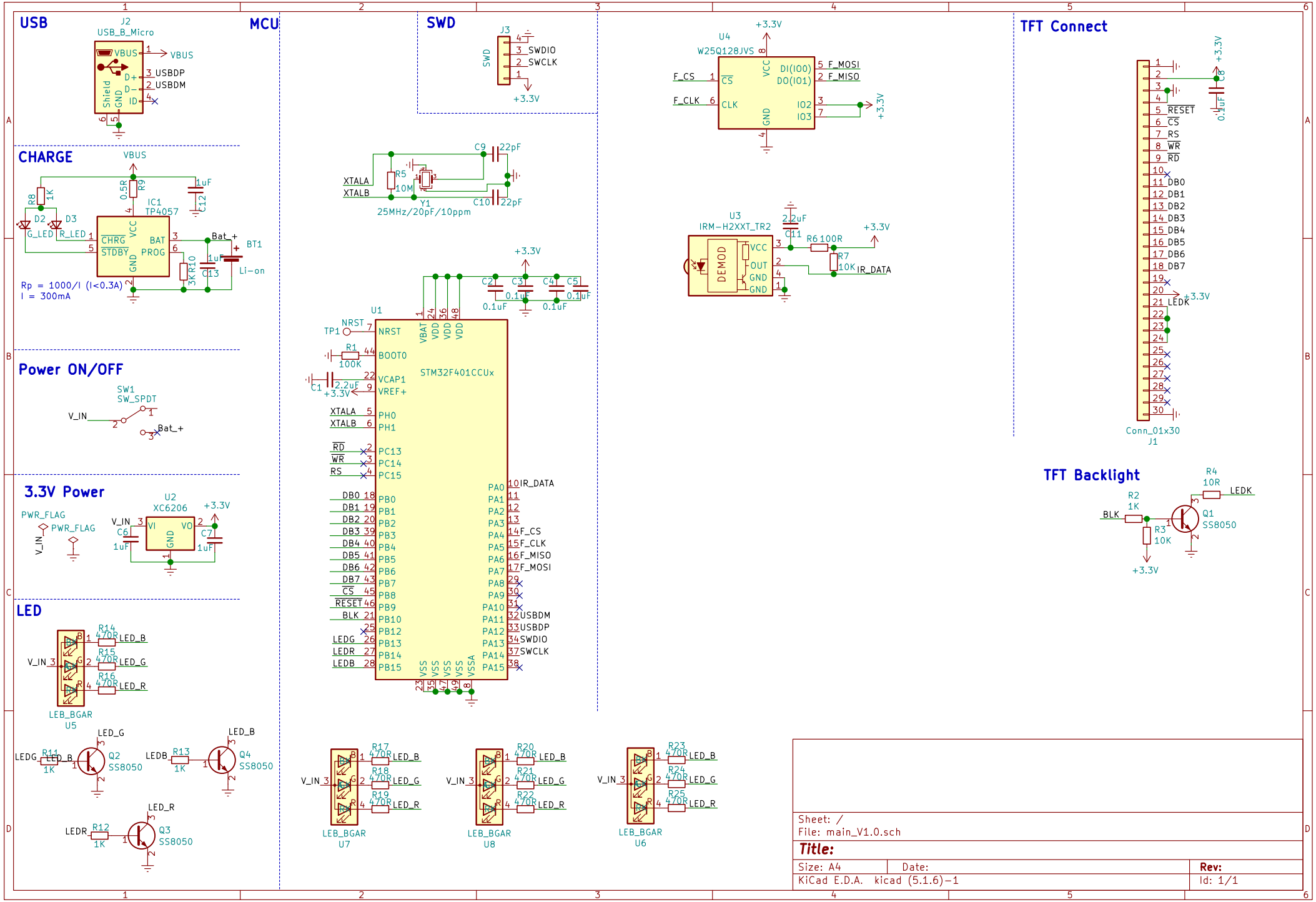
USB
J2
USB_B_Micro
VBUS
USBDP
USBDM
Shield
GND
MCU
SWD
J3
SWDIO
SWCLK
+3.3V
U4
W25Q128JVS
F_CS
F_CLK
F_MOSI
F_MISO
CS
CLK
DI(IO0)
DO(IO1)
IO2
IO3
VCC
GND
TFT Connect
RESET
CS
RS
WR
RD
DB0
DB1
DB2
DB3
DB4
DB5
DB6
DB7
LEDK
Conn_01x30
J1
CHARGE
IC1
TP4057
R8
1K
R9
0.5R
C12
1uF
D2
G_LED
D3
R_LED
CHRG
STDBY
BAT
PROG
Bat_+
BT1
Li-on
C13
1uF
R10
3K
Rp = 1000/I (I<0.3A)
I = 300mA
XTALA
XTALB
R5
10M
Y1
25MHz/20pF/10ppm
C9
22pF
C10
22pF
U3
IRM-H2XXT_TR2
DEMOD
VCC
OUT
GND
C11
2.2uF
R6 100R
R7
10K
IR_DATA
U1
STM32F401CCUx
NRST
TP1
R1
100K
BOOT0
VCAP1
VREF+
C1
2.2uF
PH0
PH1
PC13
PC14
PC15
PB0
PB1
PB2
PB3
PB4
PB5
PB6
PB7
PB8
PB9
PB10
PB12
PB13
PB14
PB15
PA0
PA1
PA2
PA3
PA4
PA5
PA6
PA7
PA8
PA9
PA10
PA11
PA12
PA13
PA14
PA15
VBAT
VDD
VSS
VSSA
C2
C3
C4
C5
0.1uF
Power ON/OFF
SW1
SW_SPDT
V_IN
Bat_+
3.3V Power
PWR_FLAG
U2
XC6206
VI
VO
GND
C6
1uF
C7
1uF
LED
R14
470R
R15
470R
R16
470R
LED_B
LED_G
LED_R
LEB_BGAR
U5
LEDG
LEDB
LEDR
Q2
SS8050
Q4
SS8050
Q3
SS8050
R12
1K
R13
1K
R17
R18
R19
R20
R21
R22
R23
R24
R25
U7
U8
U6
TFT Backlight
R4
10R
R2
1K
R3
10K
BLK
Q1
SS8050
Sheet: /
File: main_V1.0.sch
Title:
Size: A4
Date:
Rev:
KiCad E.D.A. kicad (5.1.6)-1
Id: 1/1