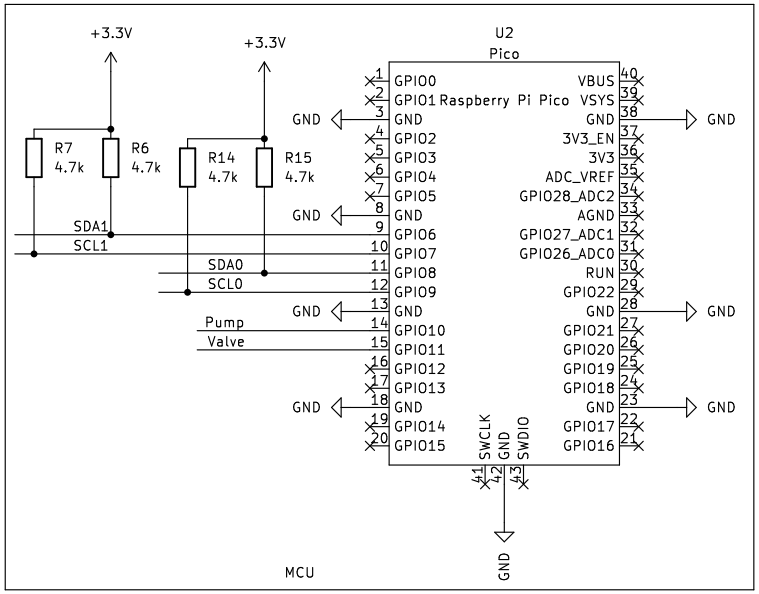
+3.3V
+3.3V
U2
Pico
R7
4.7k
R6
4.7k
R14
4.7k
R15
4.7k
GND
GND
GND
GND
GND
GND
GND
GND
SDA1
SCL1
SDA0
SCL0
Pump
Valve
GPIO0
GPIO1
GND
GPIO2
GPIO3
GPIO4
GPIO5
GND
GPIO6
GPIO7
GPIO8
GPIO9
GND
GPIO10
GPIO11
GPIO12
GPIO13
GND
GPIO14
GPIO15
VBUS
VSYS
GND
3V3_EN
3V3
ADC_VREF
GPIO28_ADC2
AGND
GPIO27_ADC1
GPIO26_ADC0
RUN
GPIO22
GND
GPIO21
GPIO20
GPIO19
GPIO18
GND
GPIO17
GPIO16
SWCLK
GND
SWDIO
GND
MCU

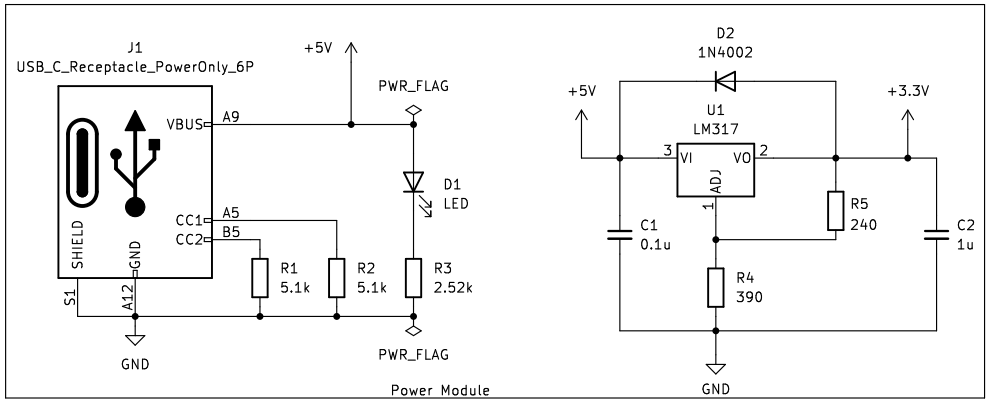
J1
USB_C_Receptacle_PowerOnly_6P
+5V
PWR_FLAG
VBUS
A9
D1
LED
CC1
CC2
A5
B5
SHIELD
GND
S1
A12
R1
5.1k
R2
5.1k
R3
2.52k
GND
PWR_FLAG
D2
1N4002
+5V
+3.3V
U1
LM317
VI
VO
ADJ
R5
240
C1
0.1u
C2
1u
R4
390
GND
Power Module

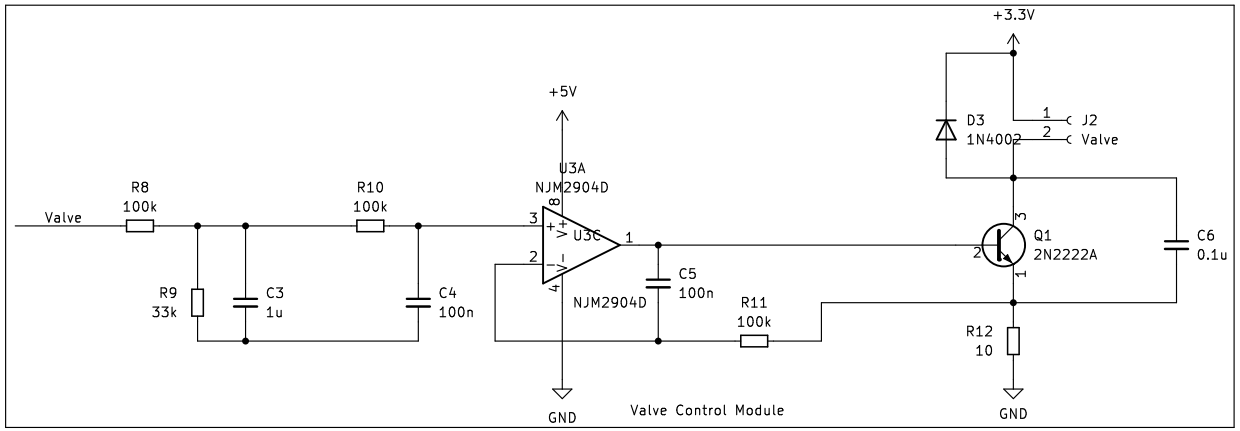
+3.3V
+5V
D3
1N4002
J2
Valve
Valve
R8
100k
R10
100k
U3A
NJM2904D
U3C
Q1
2N2222A
C6
0.1u
R9
33k
C3
1u
C4
100n
C5
100n
NJM2904D
R11
100k
R12
10
GND
GND
Valve Control Module

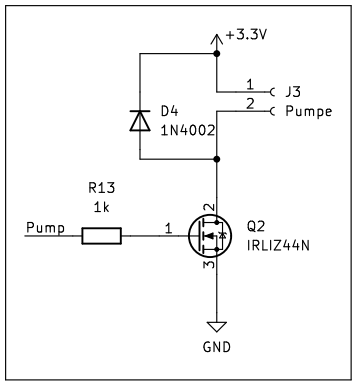
+3.3V
J3
Pumpe
D4
1N4002
R13
1k
Pump
Q2
IRLIZ44N
GND

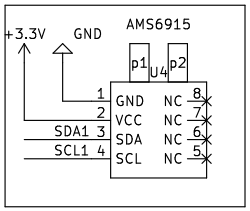
+3.3V
GND
AMS6915
p1
U4
p2
GND
VCC
SDA
SCL
NC
NC
NC
NC
SDA1
SCL1

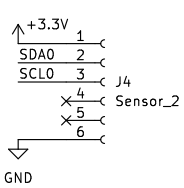
+3.3V
SDA0
SCL0
J4
Sensor_2
GND