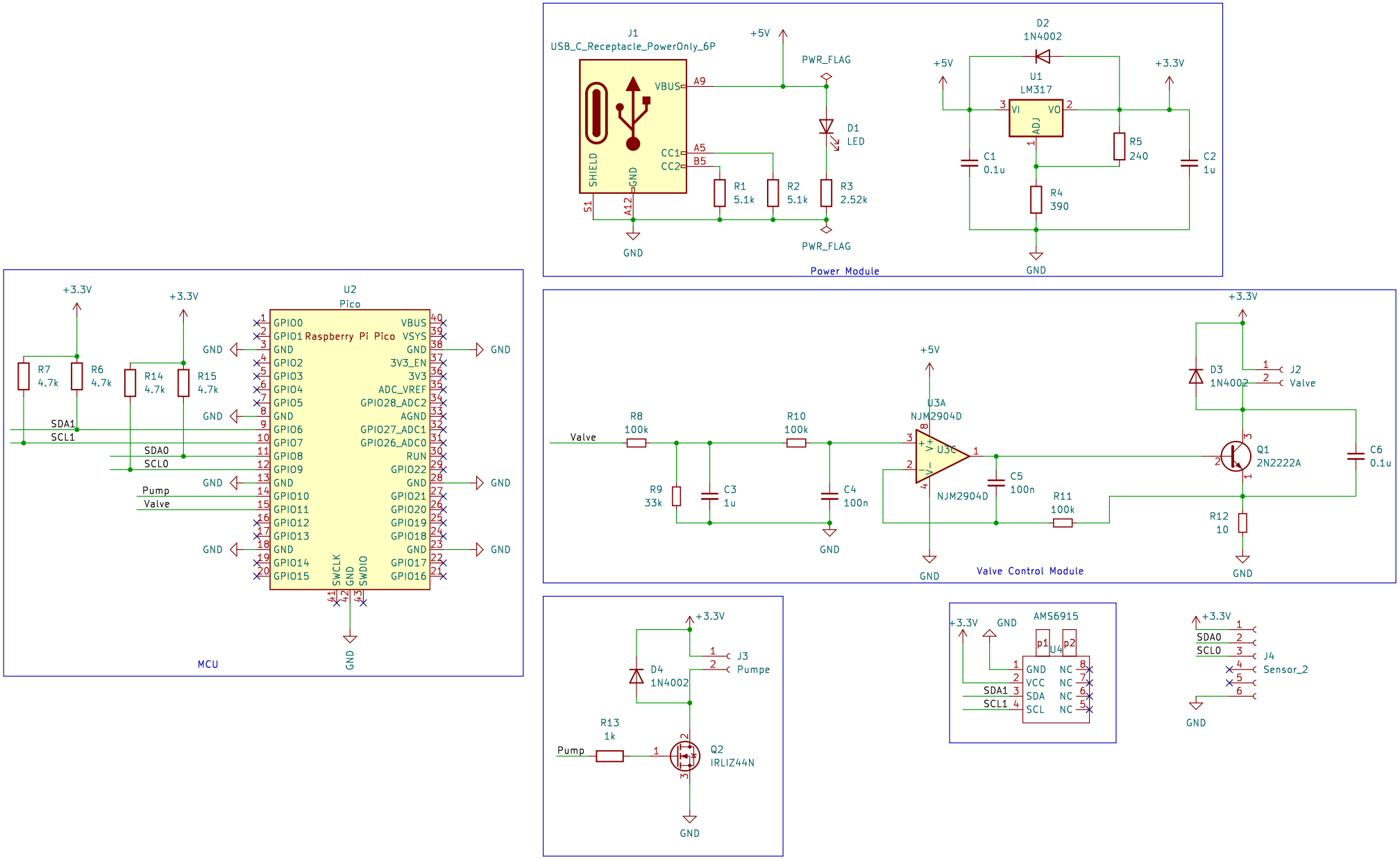
J1
USB_C_Receptacle_PowerOnly_6P
VBUS
A9
CC1
A5
CC2
B5
SHIELD
GND
S1
A12
+5V
PWR_FLAG
D1
LED
R1
5.1k
R2
5.1k
R3
2.52k
GND
PWR_FLAG
Power Module
D2
1N4002
+5V
+3.3V
U1
LM317
VI
VO
ADJ
C1
0.1u
R5
240
C2
1u
R4
390
GND
U2
Pico
Raspberry Pi Pico
GPIO0
GPIO1
GND
GPIO2
GPIO3
GPIO4
GPIO5
GND
GPIO6
GPIO7
GPIO8
GPIO9
GND
GPIO10
GPIO11
GPIO12
GPIO13
GND
GPIO14
GPIO15
VBUS
VSYS
GND
3V3_EN
3V3
ADC_VREF
GPIO28_ADC2
AGND
GPIO27_ADC1
GPIO26_ADC0
RUN
GPIO22
GND
GPIO21
GPIO20
GPIO19
GPIO18
GND
GPIO17
GPIO16
SWCLK
GND
SWDIO
+3.3V
R7
4.7k
R6
4.7k
R14
4.7k
R15
4.7k
SDA1
SCL1
SDA0
SCL0
Pump
Valve
MCU
Valve
R8
100k
R9
33k
C3
1u
R10
100k
C4
100n
+5V
U3A
NJM2904D
U3C
NJM2904D
C5
100n
R11
100k
D3
1N4002
J2
Valve
Q1
2N2222A
C6
0.1u
R12
10
Valve Control Module
D4
1N4002
J3
Pumpe
R13
1k
Pump
Q2
IRLIZ44N
AMS6915
U4
p1
p2
GND
VCC
SDA
SCL
NC
SDA1
SCL1
SDA0
SCL0
J4
Sensor_2