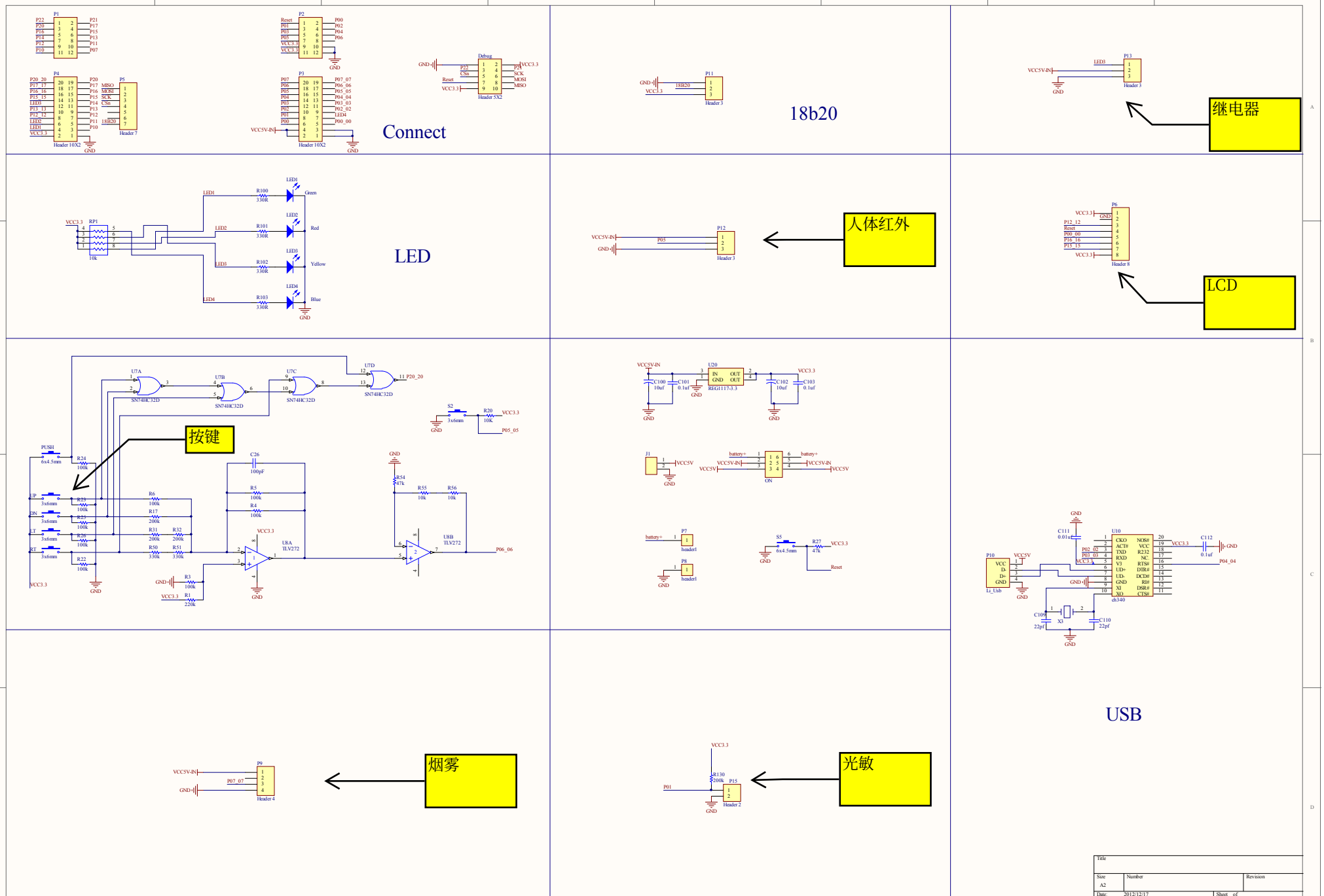

Title		
Size: A2	Number	Revision
Date: 2012/12/17		Sheet of
File: E:\zigbee_NJZB5BB-V20-A.SchDoc		Drawn By: