Passive Filter Design

I. Low-Pass Filter Design

The purpose of the first part of the experiment is to design and analyze an RL low-pass filter. First, by deriving the circuit's transfer function, we study its frequency response characteristics and calculate the cutoff frequency. Then, we verify the theoretical calculations using LTspice simulation and observe the circuit's response at different frequencies.

1. Task 1: Deriving the Transfer Function of the RL Low-Pass Filter

Task 1 requires analyzing the transfer function of the given RL low-pass filter circuit (as shown in Fig.1).

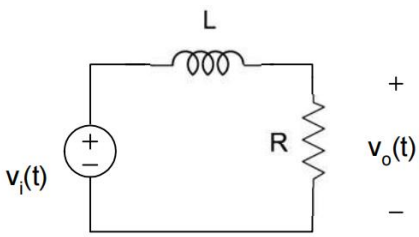

Fig.1 RL Low-Pass Filter Circuit

According to the transfer function formula:

$$H(s) = \frac{V_o(s)}{V_i(s)} \tag{1}$$

Since the resistor and inductor are in series, the output voltage can be expressed as:

$$V_o(s) = V_i(s) \cdot \frac{Z_R}{Z_R + Z_L} \tag{2}$$

By substituting the expressions for the resistor and inductor impedances, the transfer function is obtained as:

$$H(s) = \frac{R}{R + j\omega L} \tag{3}$$

2. Task 2: Calculating the Cutoff Frequency

The cutoff frequency is defined as the frequency at which the transfer function amplitude decreases by 3 dB. Based on this definition, the cutoff frequency can be calculated using the amplitude's maximum value divided by $\sqrt{2}$. Based on the transfer function, the amplitude is given by:

$$|H(j\omega)| = \frac{R}{\sqrt{R^2 + (\omega L)^2}} \tag{4}$$

From this, we can solve for:

$$\omega_c = \frac{R}{L} \tag{5}$$

Substituting the given values $R = 100\Omega$, $L = 1\text{mH}$, we get:

$$\omega_c = \frac{100}{1\times10^{-3}} = 10^5 \text{rad/s} \tag{6}$$

The cutoff frequency is:

$$f_c = \frac{\omega_c}{2\pi} = \frac{10^5}{2\pi} \approx 15915.5\,\text{Hz} \tag{7}$$

3. Task 3: LTspice Simulation

To verify the correctness of the theoretical calculations, the circuit from Fig.1 is built in LTspice, as shown in Fig.2.

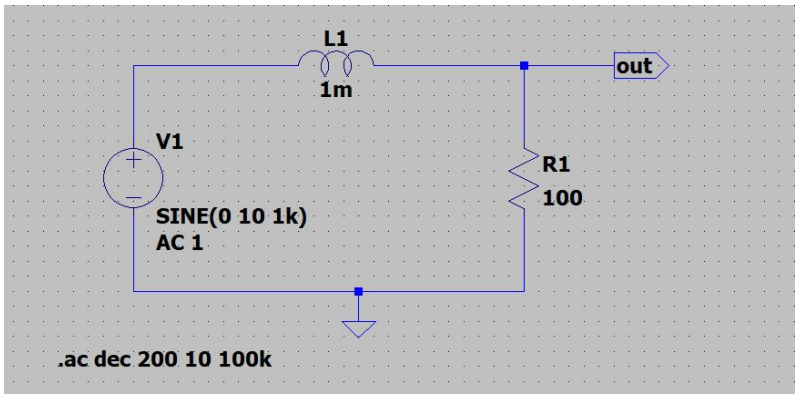

Fig.2 LTspice Low-Pass Filter Circuit Setup

An AC analysis is performed on the circuit in LTspice, with the frequency range set from 10 Hz to 100 kHz and the number of frequency points set to 200 points per decade. After running the simulation, the magnitude and phase response plots are obtained (as shown in Fig.3).

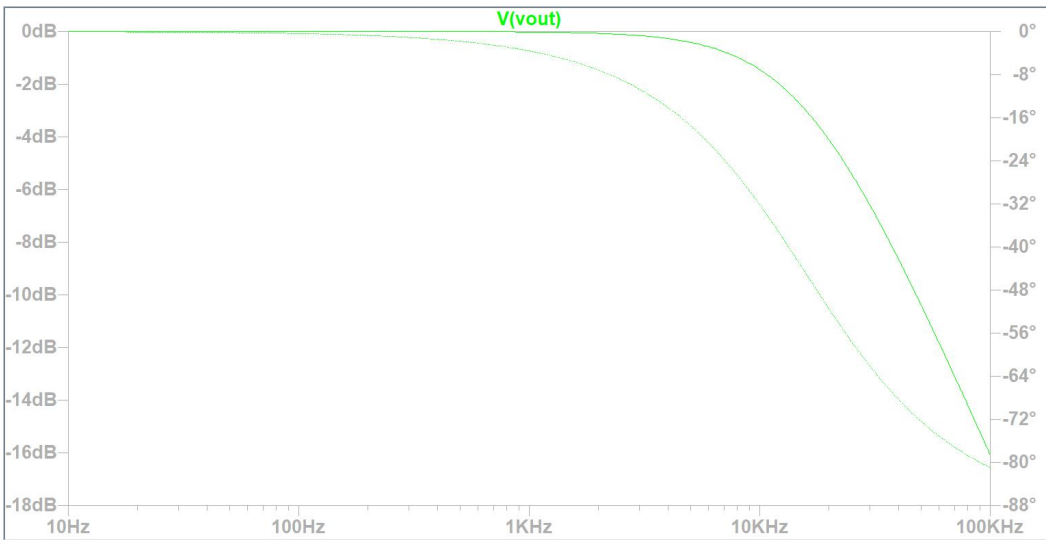

Fig.3 Magnitude and Phase Response Plots

To precisely observe the cutoff frequency, the cursor function in LTspice is used to find the point where the amplitude decreases by 3 dB. That is, the frequency corresponding to the -3 dB point on the Y-axis in the magnitude response plot corresponds to the cutoff frequency, as shown in Fig.4.

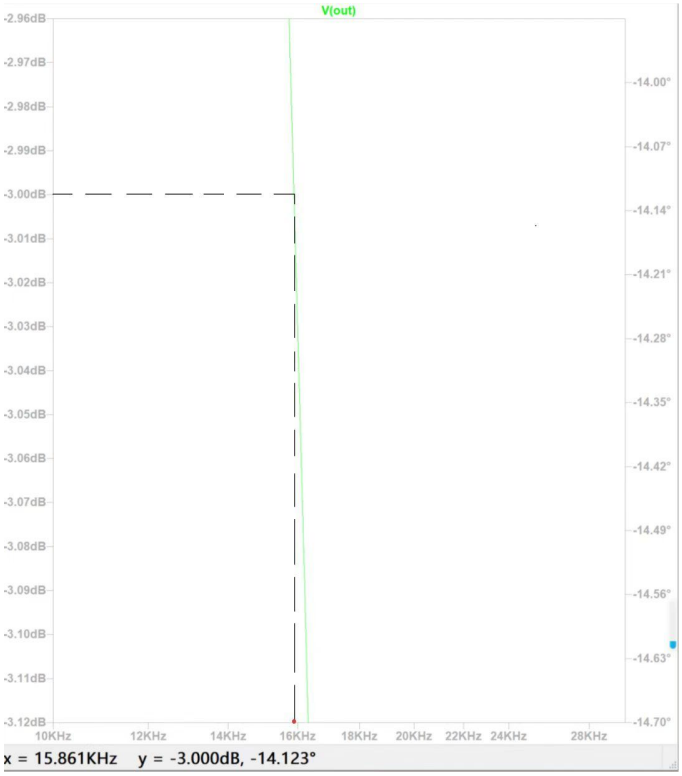

Fig.4 Cutoff Frequency Illustration

As seen in the figure, the frequency at which the amplitude decreases by 3 dB is approximately 15.86 kHz, which closely matches the theoretical calculation. Since the theoretical calculation and simulation results are consistent, this indirectly verifies the correctness of the conclusion.

Similarly, from the image, it can be seen that the low-pass filter takes advantage of the characteristic of the inductive impedance being smaller at low frequencies and higher at high frequencies, allowing it to filter out high-frequency signals and thereby achieve the function of removing high-frequency noise.

II. High-Pass Filter Design

The second part of the experiment requires designing and analyzing a high-pass filter. First, the transfer function and cutoff frequency are derived theoretically for the given TL high-pass filter. Then, the circuit is simulated using LTspice to observe its magnitude response and the position of the cutoff frequency.

1. Task 4: Deriving the Transfer Function

Task 4 requires analyzing the transfer function of the given RL high-pass filter circuit (as shown in Fig.5).

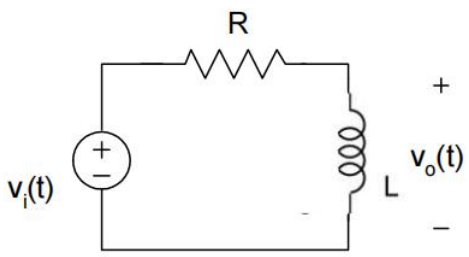

Fig.5 RL High-Pass Filter Circuit

Since the resistor and inductor are in series, based on the transfer function formula (1), and using the voltage divider method, the transfer function can be expressed as:

$$H(s) = \frac{V_o(s)}{V_i(s)} = \frac{Z_L}{Z_L+Z_R} = \frac{j\omega L}{j\omega L+R} \tag{8}$$

Further analysis shows that when the frequency is very high, the output voltage is nearly equal to the input voltage, meaning the signal can pass through completely. Conversely, when the frequency is low, the inductive impedance increases, filtering out the low-frequency signals.

2. Task 5: Calculating the Cutoff Frequency

Using formula (5), and substituting the values from Task 5, the cutoff frequency is calculated as:

$$\omega_c = \frac{50}{1\times10^{-3}} = 5 \times 10^4 \mathrm{rad/s} \tag{9}$$

Converting this to Hertz:

$$f_c = \frac{\omega_c}{2\pi} = \frac{5\times10^4}{2\pi} \approx 7.96\,\mathrm{kHz} \tag{10}$$

3. Task 6: LTspice Simulation

Similarly, to verify the theoretical calculations, the given circuit from Fig.5 is built in LTspice, as shown in Fig.6.

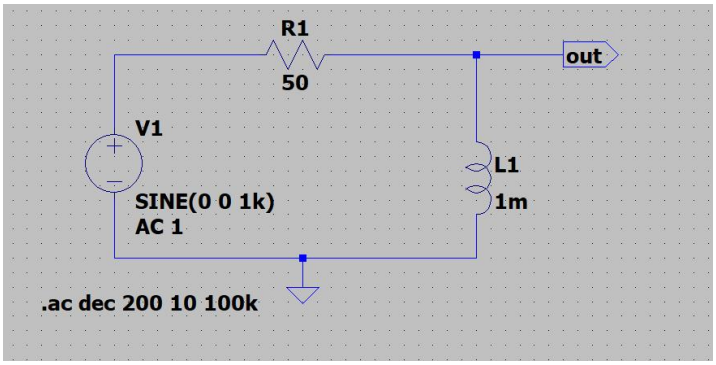

Fig.6 LTspice High-Pass Filter Circuit Setup

An AC analysis is performed on the circuit in LTspice, with the frequency range set from 10 Hz to 100 kHz, and 200 points per decade. After running the simulation, the output magnitude and phase response plots are obtained (as shown in Fig.7).

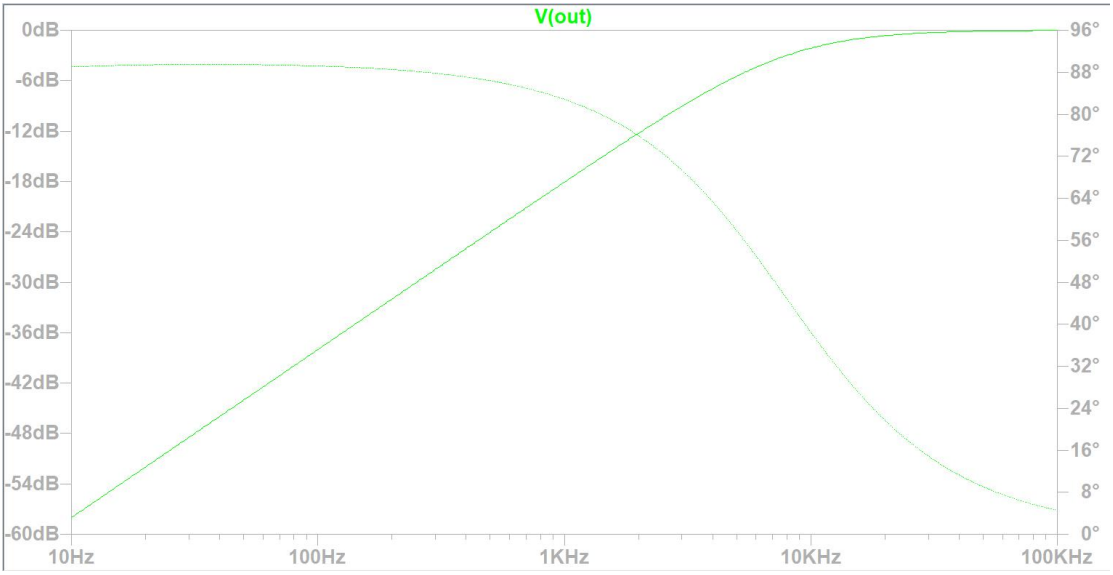

Fig.7 Magnitude and Phase Response Plots

To precisely observe the cutoff frequency, the cursor function in LTspice is used to find the point where the amplitude decreases by 3 dB. That is, the frequency corresponding to the -3 dB point on the Y-axis in the magnitude response plot corresponds to the cutoff frequency, as shown in Fig.8.

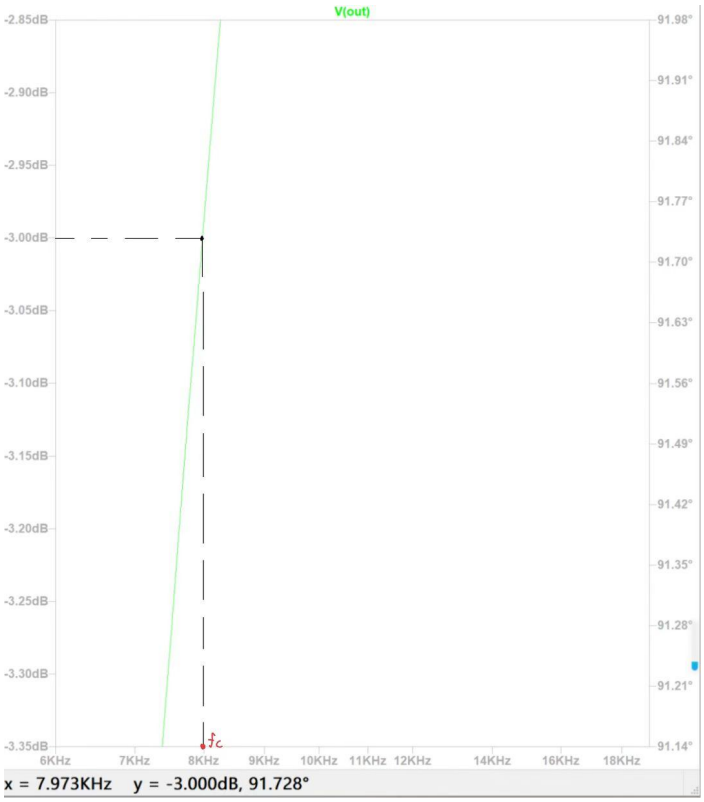

Fig.8 Cutoff Frequency Illustration

From the figure, it can be seen that the frequency at which the amplitude decreases by 3 dB is approximately 7.97 kHz, which closely matches the theoretical result in equation (10). Since the theoretical calculations and simulation results are consistent, this verifies the correctness of the conclusion.

4. Task 7: LTspice Setup of RLC Circuit and Simulation

Task 7 requires using LTspice to build and simulate the RLC circuit shown in Fig.9.

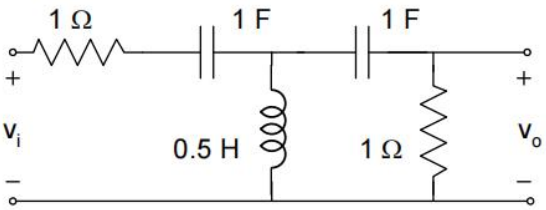

Fig.9 Task 7 Given RLC Circuit

The LTspice circuit setup is shown in Fig.10.

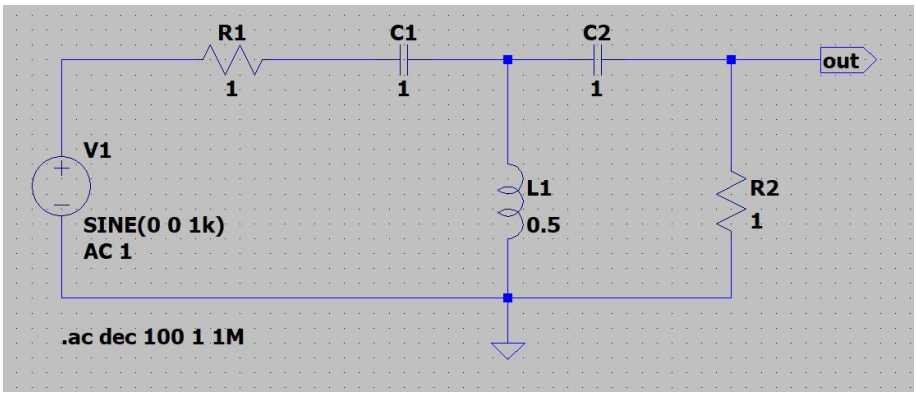

Fig.10 LTspice Task 7 Circuit Setup

An AC analysis is performed on the circuit in LTspice, with the frequency range set from 1 Hz to 1 MHz, and 100 points per decade. After running the simulation, the output magnitude and phase response plots are obtained (as shown in Fig.11).

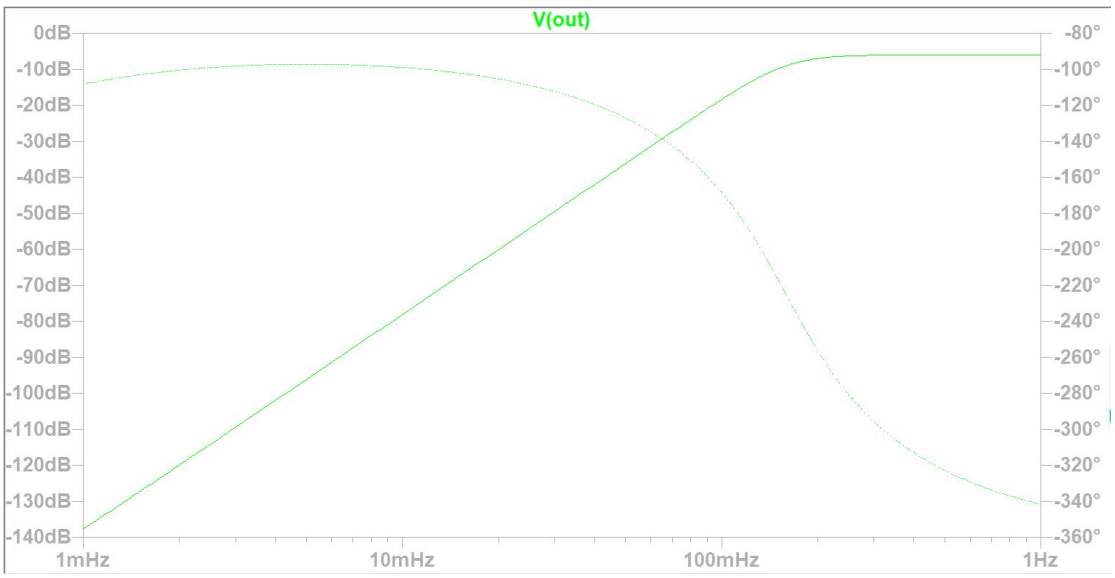

Fig.11 Magnitude and Phase Response Plots

To precisely observe the cutoff frequency, the cursor function in LTspice is used to find the point where the amplitude decreases by 3 dB. That is, the frequency corresponding to the -9 dB point on the Y-axis in the magnitude response plot corresponds to the cutoff frequency, as shown in Fig.12.

Fig.12 Cutoff Frequency Illustration

From the figure, it can be seen that the frequency at which the amplitude decreases by 3 dB is approximately 159.8 mHz, which is the cutoff frequency.

III. Band-Pass Filter Design

The third part of the experiment requires deriving the transfer function for the given band-pass filter, and then using LTspice to construct and simulate the circuit to observe its cutoff frequency and bandwidth.

1. Task 8: Deriving the Transfer Function

Task 8 requires analyzing the transfer function of the given band-pass filter circuit (as shown in Fig.13).

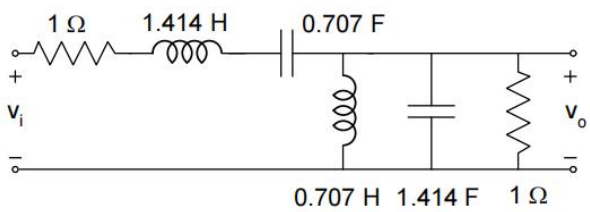

Fig.13 Band-Pass Filter Circuit

Based on the impedance of the inductor, capacitor, and resistor, and using the voltage divider theorem, the output voltage can be calculated as:

$$v_o = v_i \cdot \frac{Z_C}{Z_R+Z_L+Z_C} = v_i \cdot \frac{1}{1+1.414s+\frac{1}{s\cdot 0.707}} \tag{11}$$

Substituting into the transfer function formula (1), we obtain the transfer function expressed as:

$$H(s) = \frac{1}{1+1.414s+\frac{1}{s\cdot 0.707}} \tag{12}$$

Considering the complex variable $s = jw$, the transfer function can be written as:

$$H(j\omega) = \frac{\frac{1}{j\omega 0.707}}{1+1.414j\omega+\frac{1}{j\omega 0.707}} \tag{13}$$

2. Task 9: LTspice Circuit Setup and Calculating the Cutoff Frequency and Bandwidth

Task 9 requires using LTspice to build and simulate the RLC circuit shown in Fig.13. The LTspice circuit setup is shown in Fig.14.

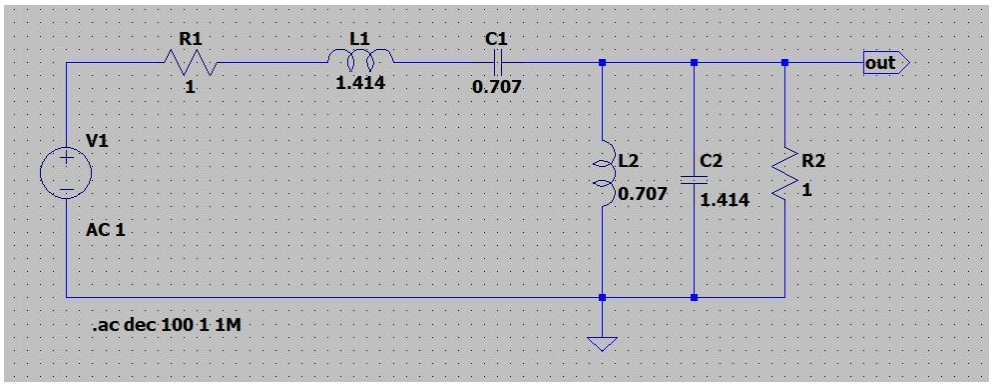

Fig.14 LTspice Task 9 Circuit Setup

An AC analysis is performed on the circuit in LTspice, with the frequency range set from 1 Hz to 1 MHz, and 100 points per decade. After running the simulation, the output magnitude and phase response plots are obtained (as shown in Fig.15).

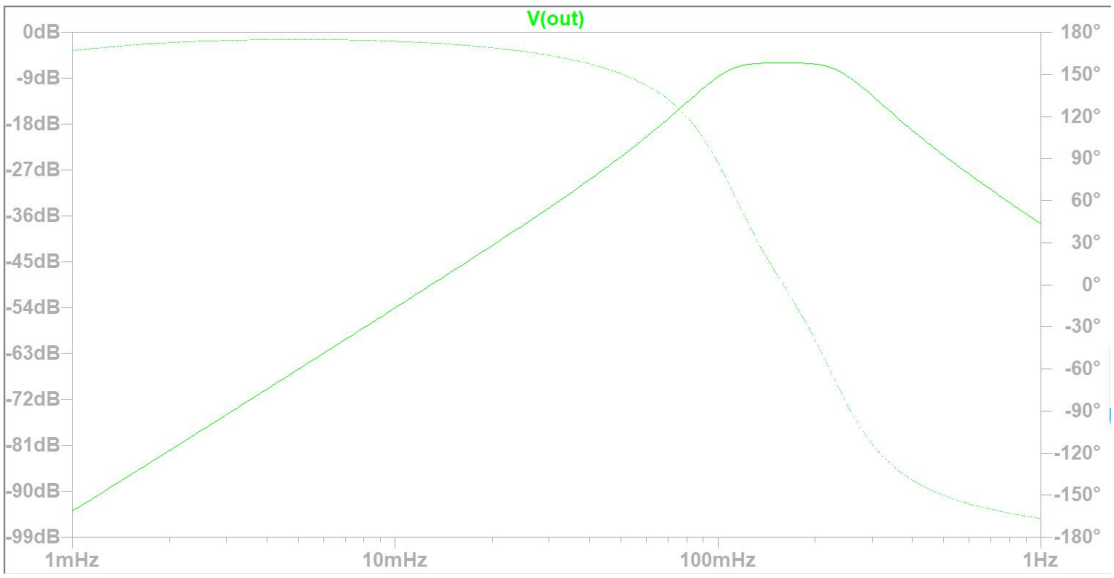

Fig.15 Magnitude and Phase Response Plots

It can be seen that the filter has two cutoff frequencies. It is evident that the transfer function of the band-pass filter is a combination of the low-pass filter and the high-pass filter. Through the combination of inductors, capacitors, and resistors, it allows signals within a specific frequency range to pass through, while signals outside this range are attenuated.

To precisely observe the cutoff frequencies, the cursor function in LTspice is used to find the points where the amplitude decreases by 3 dB. That is, the two X-axis values corresponding to the Y-axis at -9 dB represent the low and high cutoff frequencies, as shown in Fig.16.

Fig.16 Cutoff Frequency Illustration

The low cutoff frequency is approximately 98.786 mHz, and the high cutoff frequency is approximately 256.901 mHz.

So, $\omega_1 = 0.621\text{rad/s}$ and $\omega_2 = 1.610\text{rad/s}$.

Using the formula for the filter's bandwidth:

$$\Delta f = f_2 - f_1 \tag{14}$$

Substituting the values, we get:

$$f_2 - f_1 = 256.901\,\text{mHz} - 98.786\,\text{mHz} = 0.1581\,\text{Hz} \tag{15}$$

Converting to angular frequency, the bandwidth is:

$$\omega_2 - \omega_1 = 1.610\text{rad/s} - 0.621\text{rad/s} \approx 0.993\text{rad/s} \tag{16}$$