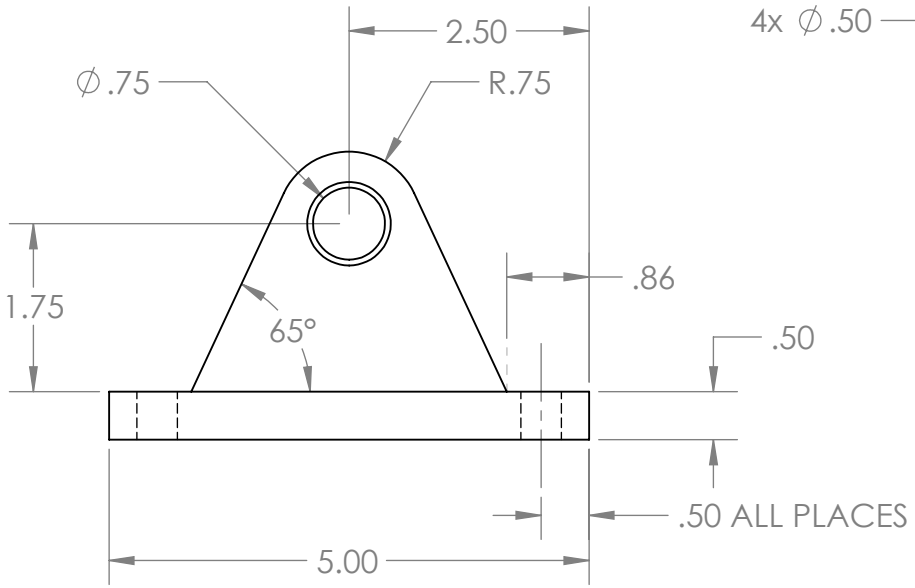

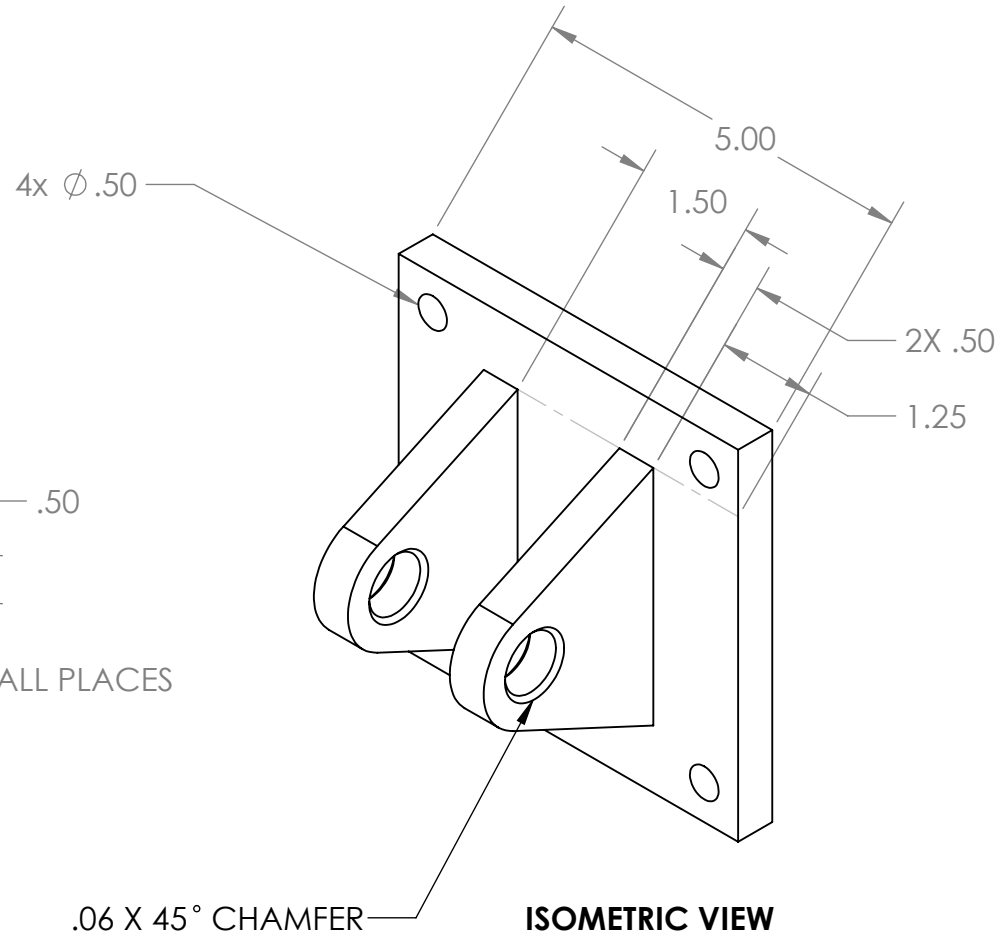

ISOMETRIC VIEW

BUILD BRACKET IN 3-D

USE FLATSHOT TO CREATE FRONT, RIGHT, AND TOP VIEWS