Wet Pipe Risers

FPST 1373

Riser Practical Exam

- Conduct inspection
  - Identify main components and state their function
    - If certain components require supervision then state such
- Conduct alarm test
- Conduct main control valve test
- Conduct valve assessment/main drain test

Components

- Check valve
  - “shotgun riser”
  - shotgun riser video

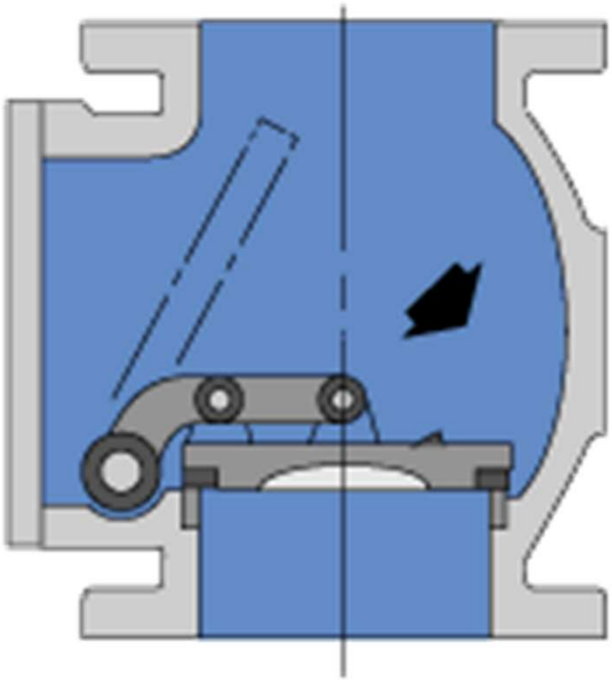

Components

- Alarm check valve
  - Alarm check valve riser video

Components

- Main control valve
  - Supervised
    - Electrical
    - Mechanical
  - Indicating

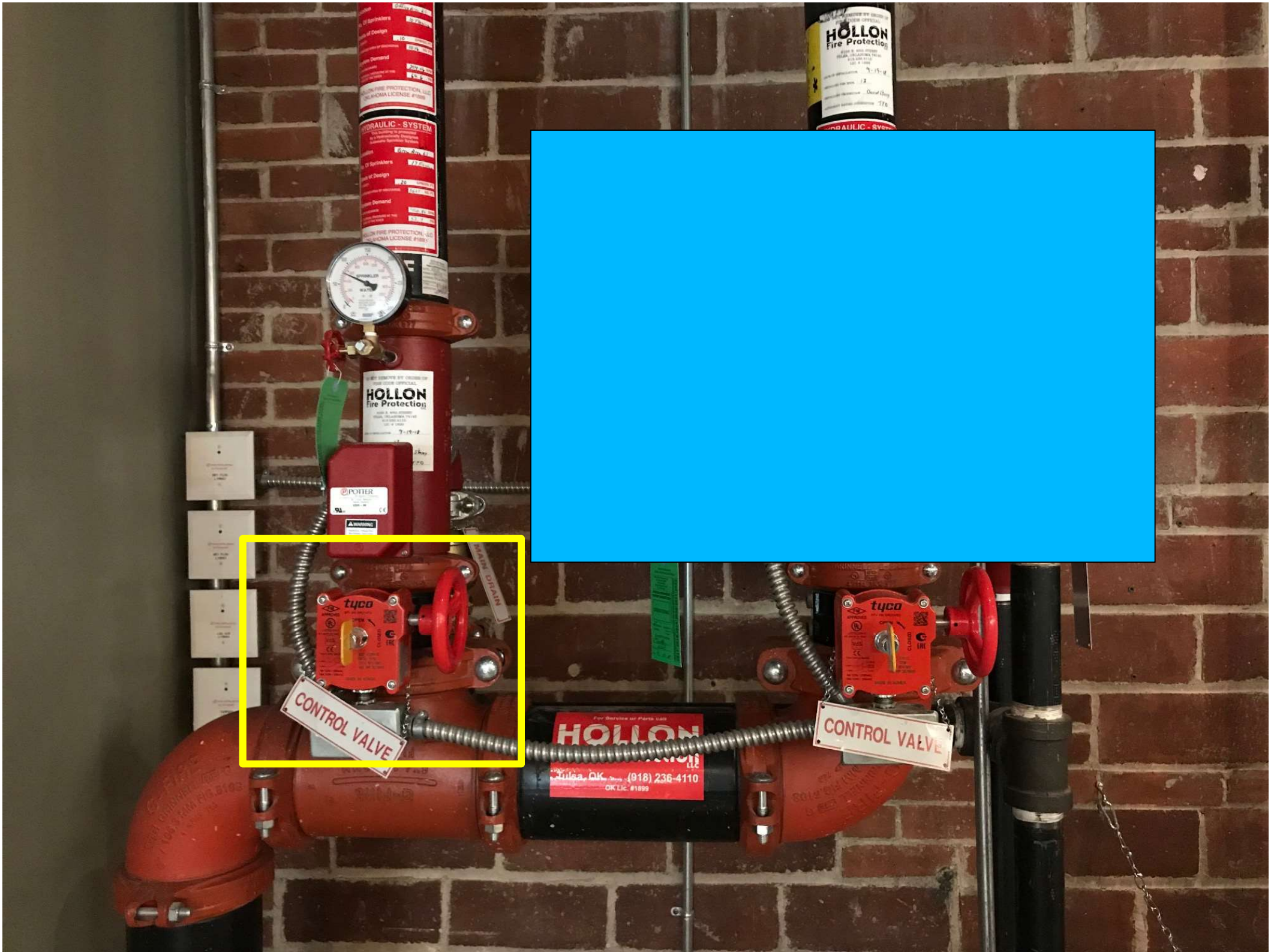
HOLLON
Fire Protection
HYDRAULIC - SYSTEM
POTTER
WARNING
MAIN DRAIN
tyco
CONTROL VALVE
CONTROL VALVE
HOLLON
Tulsa, OK
(918) 236-4110
OK Lic. #1899

Control Valves

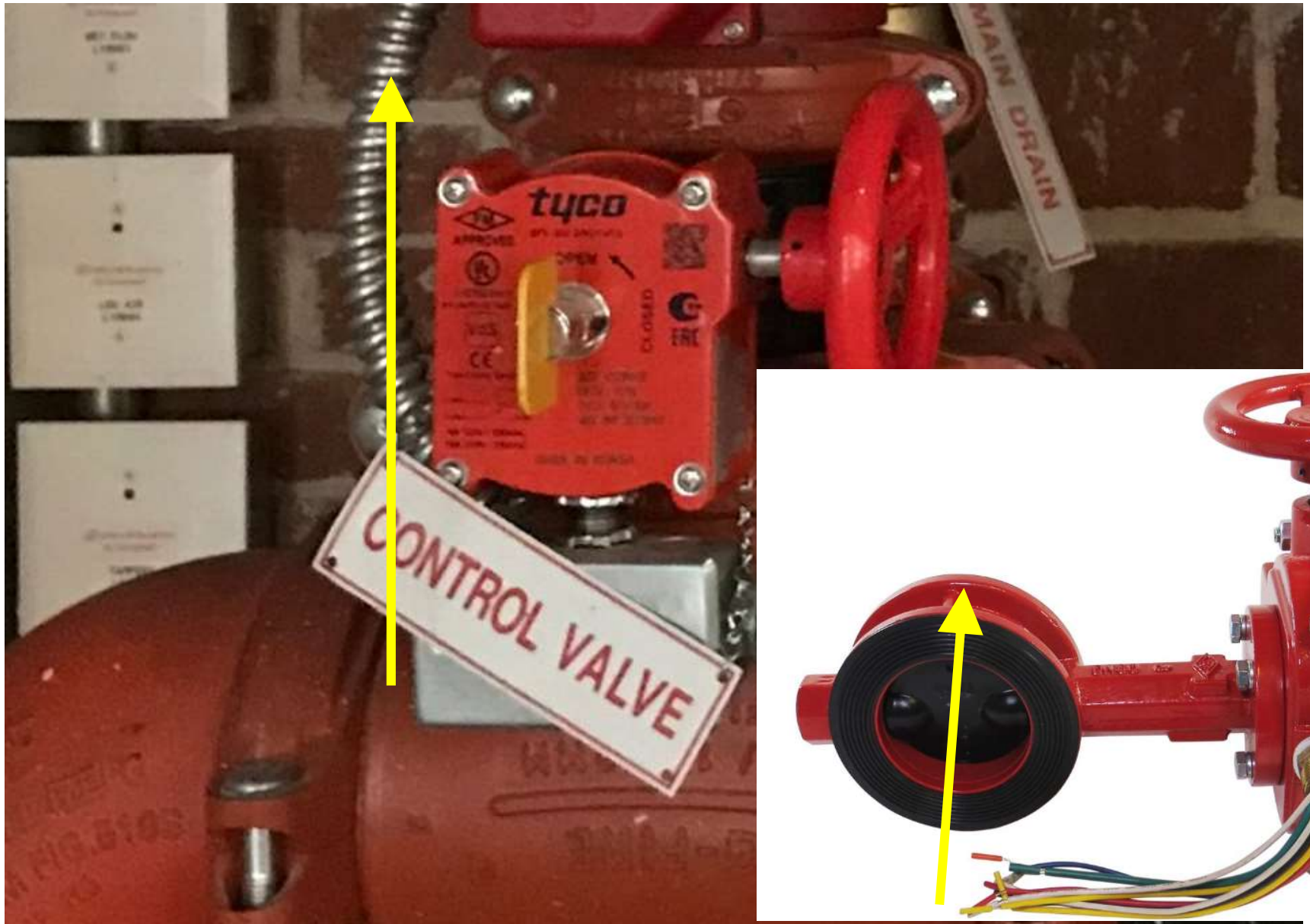

Supervised?

Components

- Pressure gages
  - Supply
  - System
  - Gage valves

Components

- Main drain
  - Empty the system for service
  - Main concern…where's the water going to go?

Components

- Water flow alarm
  - Pressure switch
  - Vane type
    - Prone to leaking and breaking
  - Water motor gong

Components

- Retard chamber
  - Prevent false alarms from pressure surges
- Alarm line valve
  - N.O.
- Alarm test valve
  - N.C.

Components

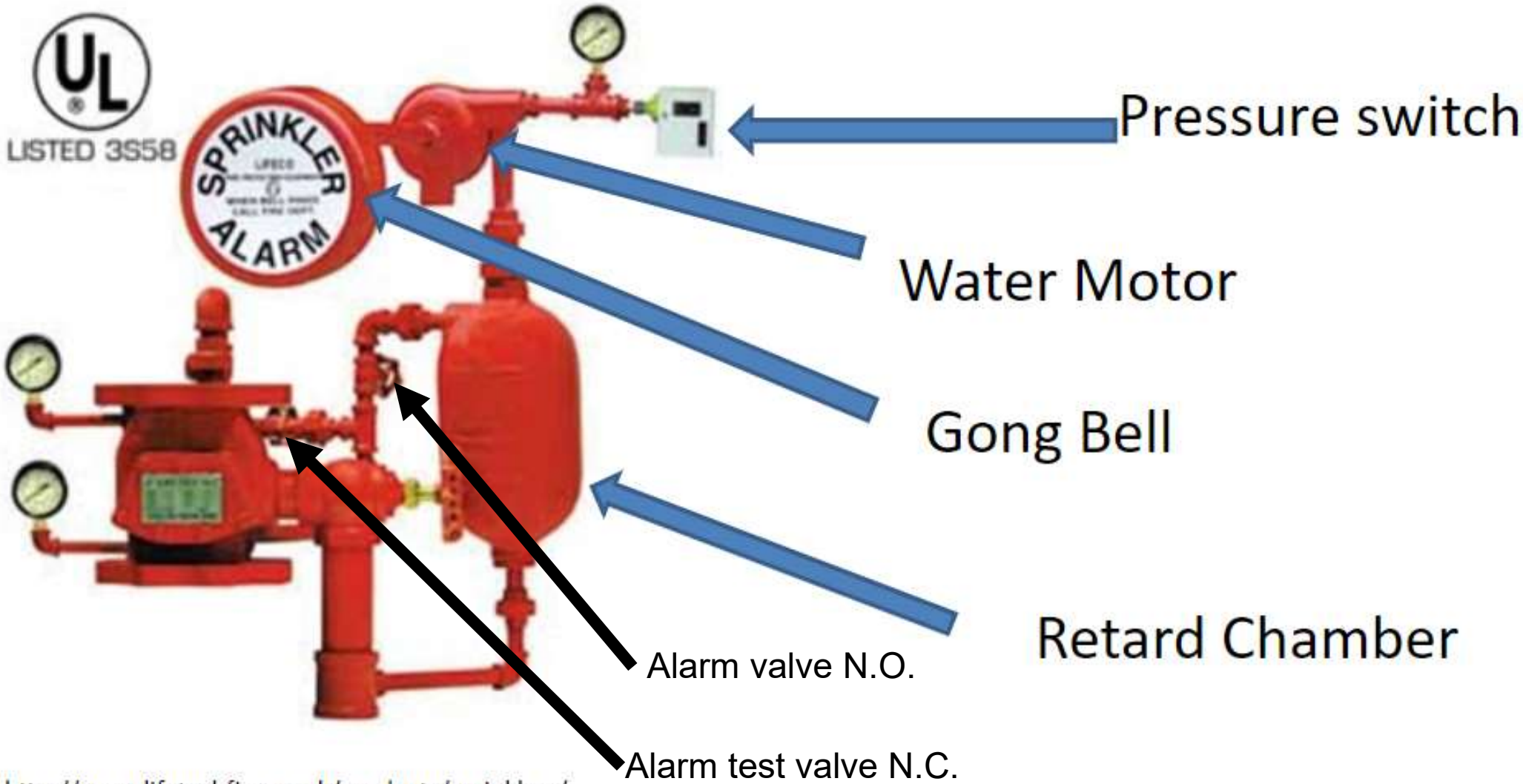

http://www.lifetechfire.co.uk/products/sprinklers/wetalarm_pic.jpg

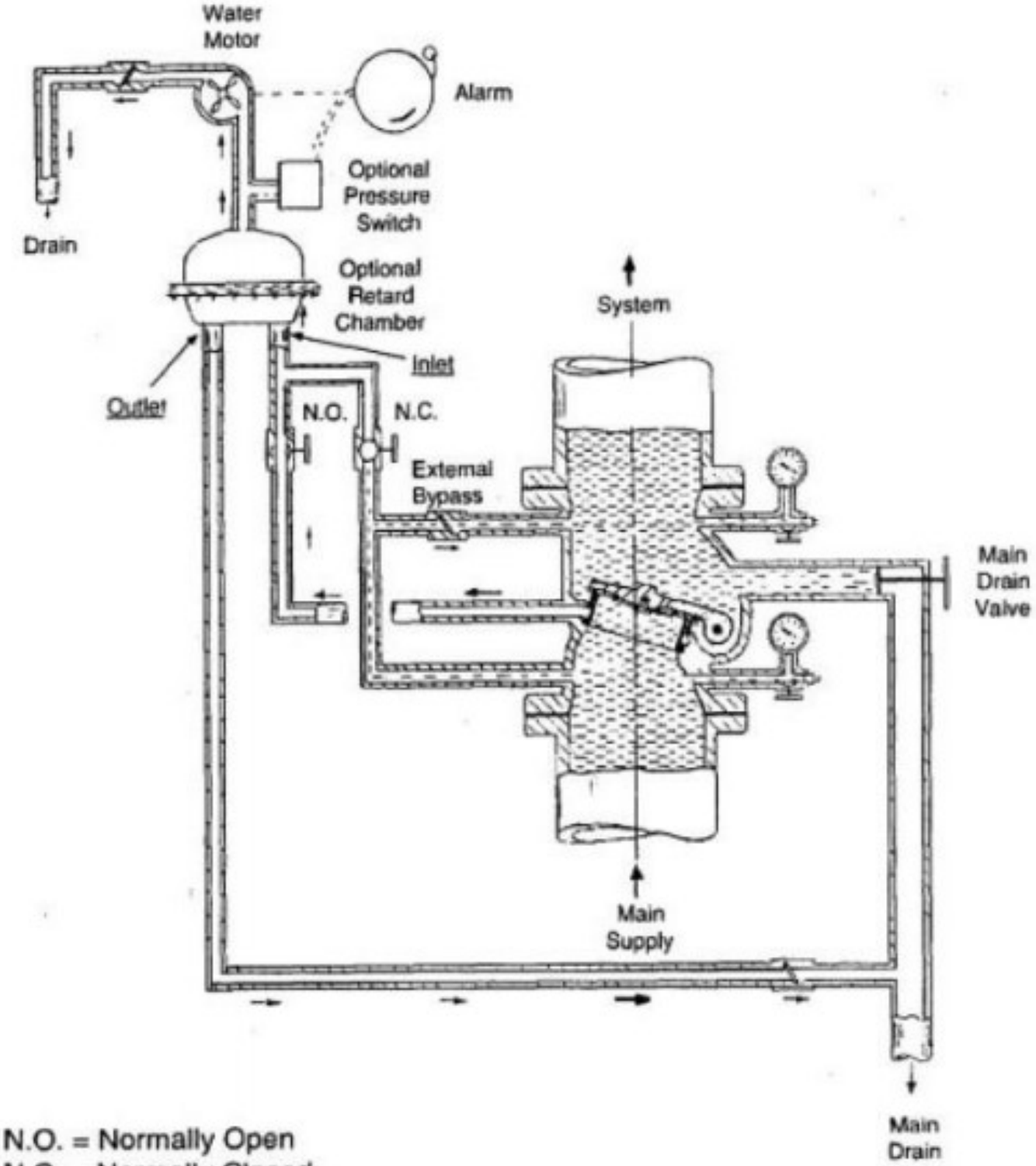

N.O. = Normally Open
N.C. = Normally Closed

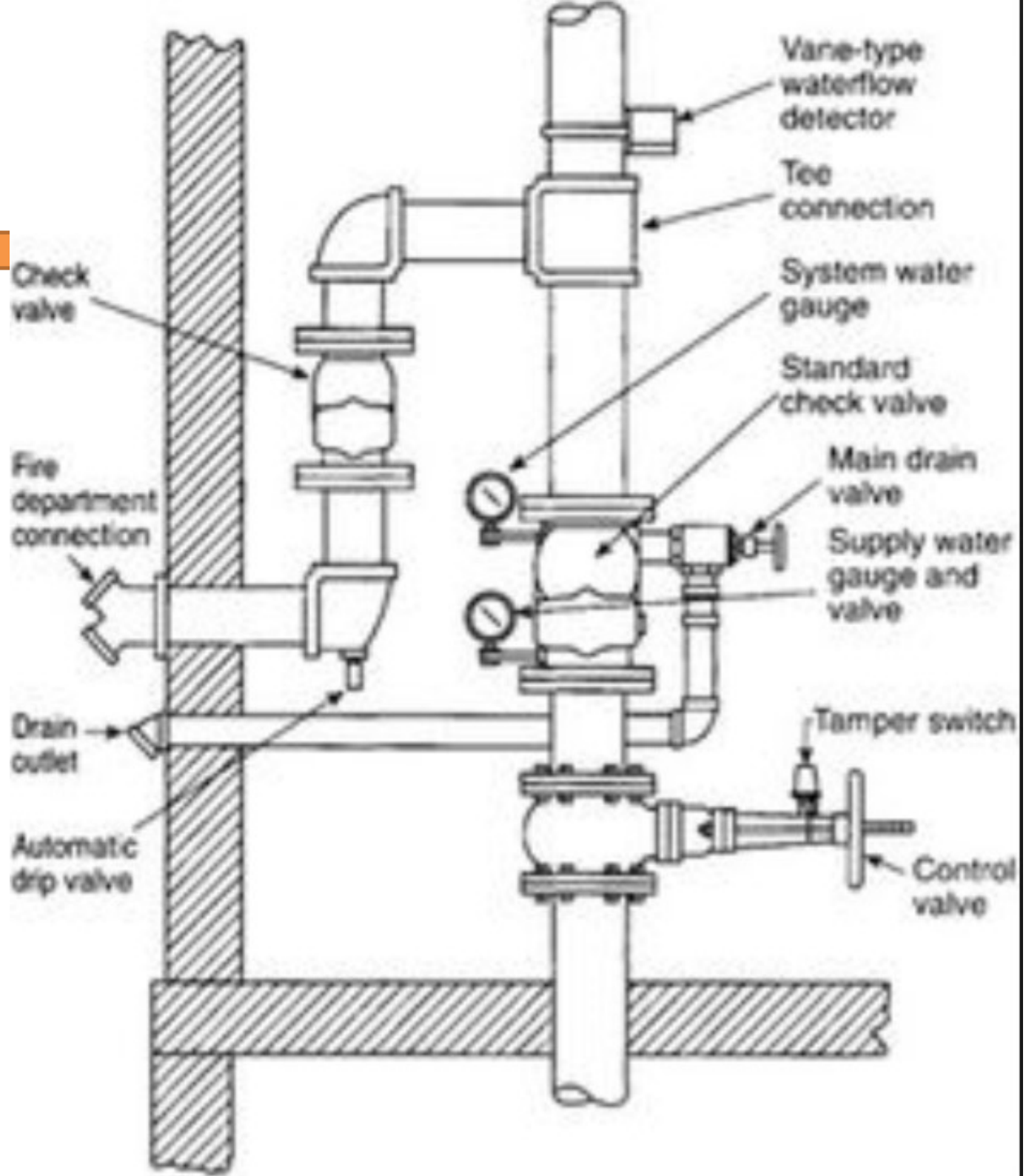
Vane-type waterflow detector
Tee connection
System water gauge
Standard check valve
Main drain valve
Supply water gauge and valve
Check valve
Fire department connection
Drain outlet
Automatic drip valve
Tamper switch
Control valve

11

main drain valve

10

alarm check valve

4

retard chamber

7

system pressure gage

6

alarm pressure switch

14

water supply

9

water motor gong

3

Fire department connection

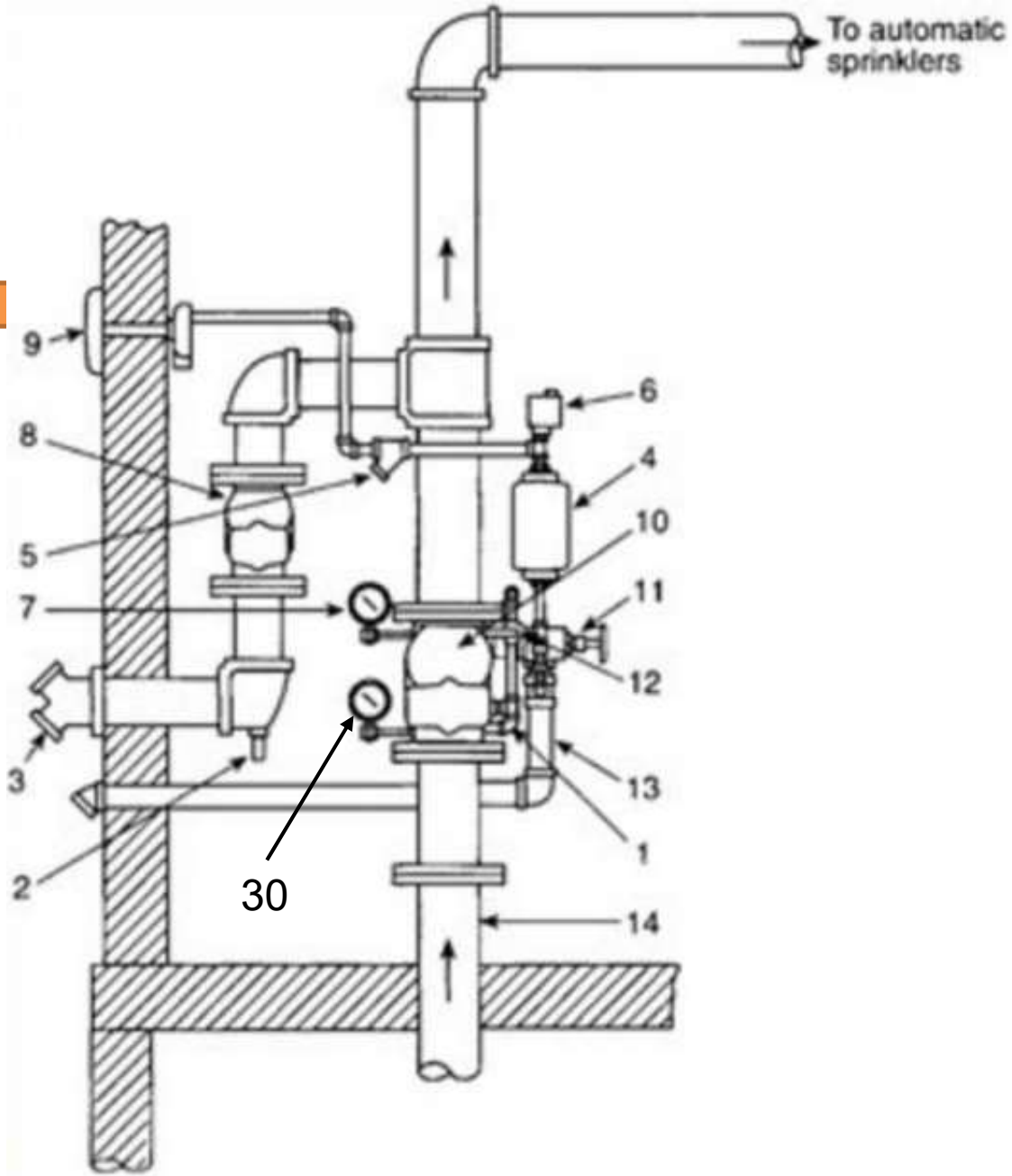

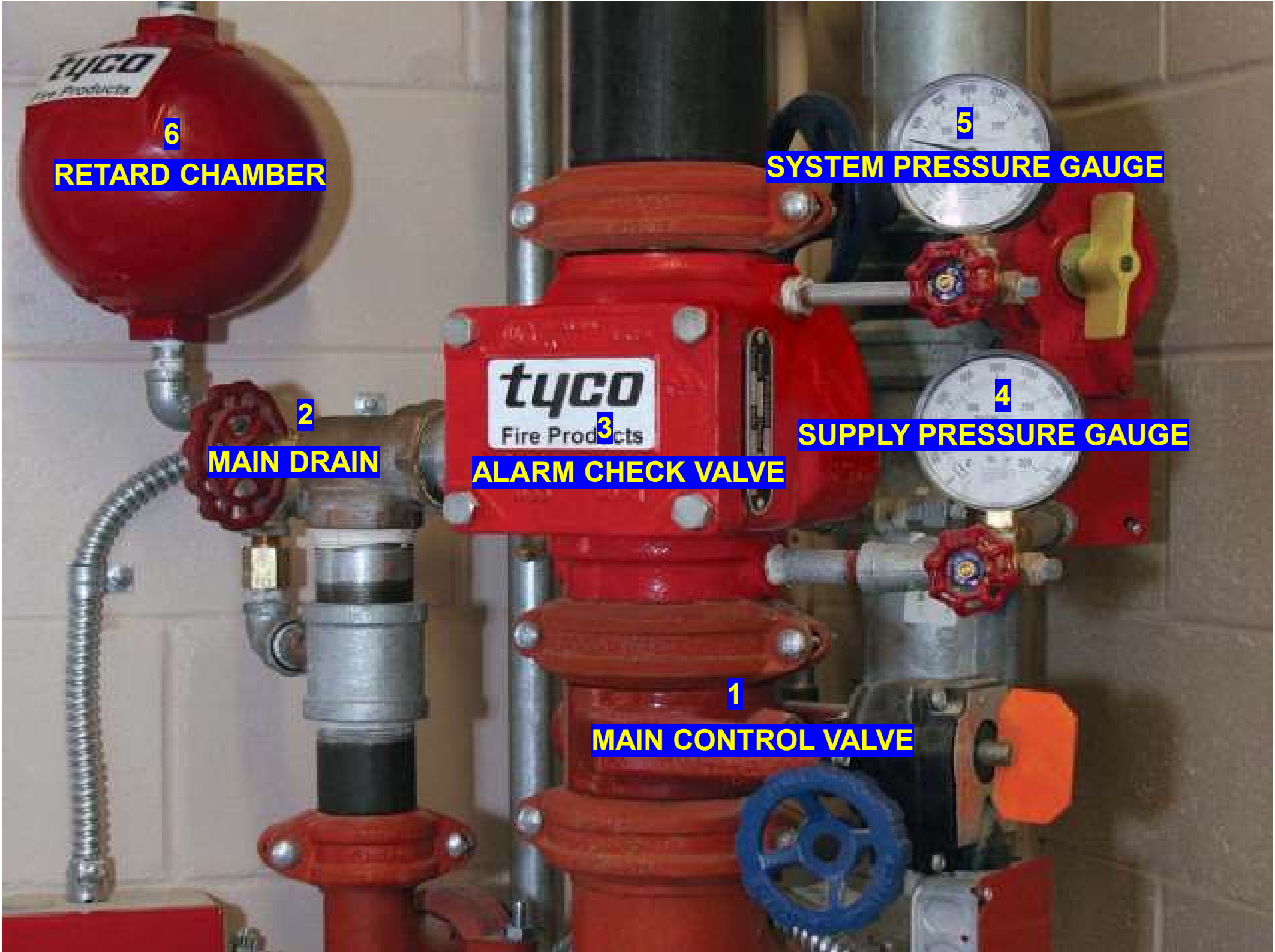
6
RETARD CHAMBER
5
SYSTEM PRESSURE GAUGE
2
MAIN DRAIN
3
ALARM CHECK VALVE
4
SUPPLY PRESSURE GAUGE
1
MAIN CONTROL VALVE

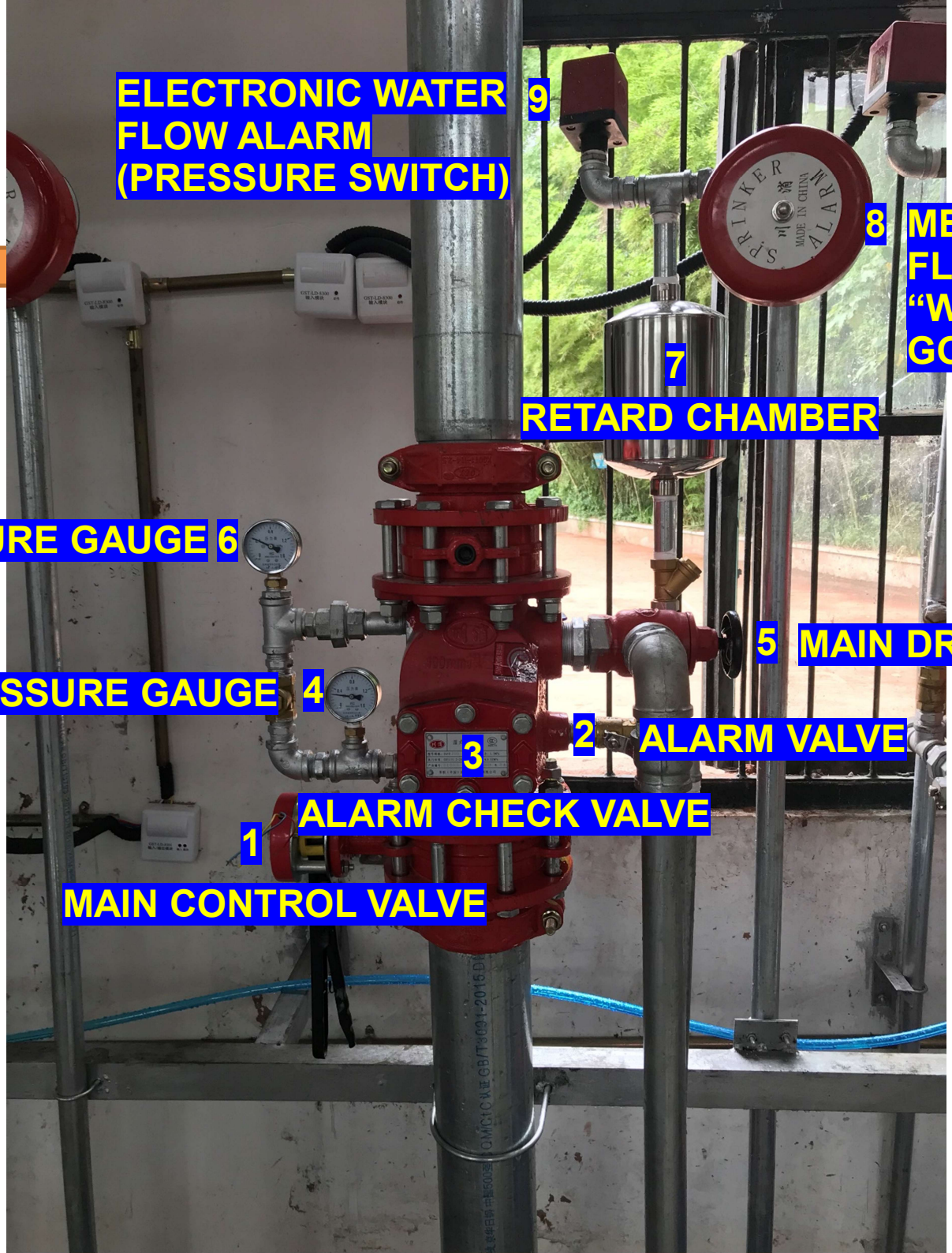
ELECTRONIC WATER FLOW ALARM (PRESSURE SWITCH) 9
8 MECHANICAL WATER FLOW ALARM "WATER MOTOR GONG"
7
RETARD CHAMBER
SYSTEM PRESSURE GAUGE 6
5 MAIN DRAIN
SUPPLY PRESSURE GAUGE 4
2 ALARM VALVE
3
ALARM CHECK VALVE
1
MAIN CONTROL VALVE

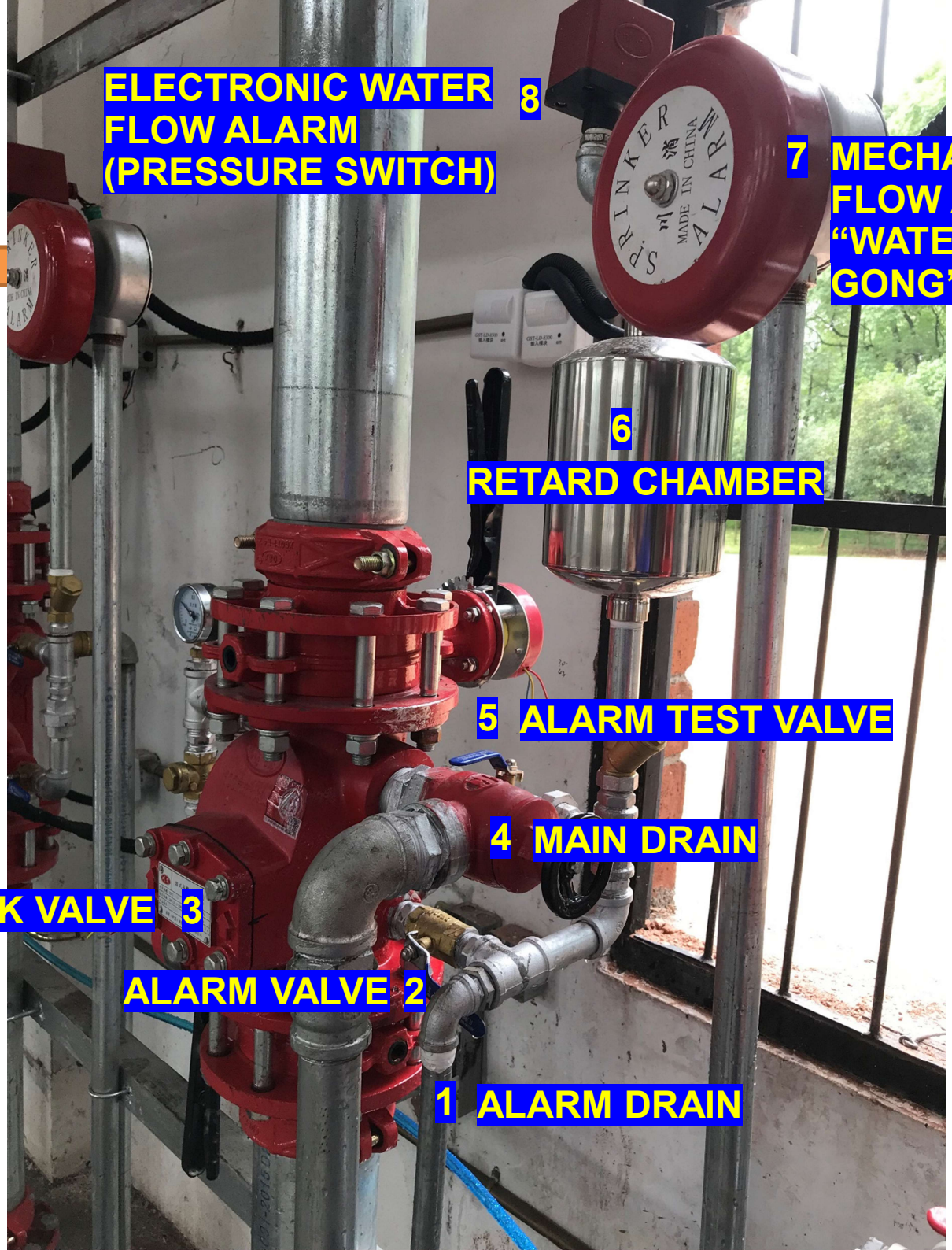
ELECTRONIC WATER FLOW ALARM (PRESSURE SWITCH) 8
7 MECHANICAL WATER FLOW ALARM "WATER MOTOR GONG"
6 RETARD CHAMBER
5 ALARM TEST VALVE
4 MAIN DRAIN
ALARM CHECK VALVE 3
ALARM VALVE 2
1 ALARM DRAIN

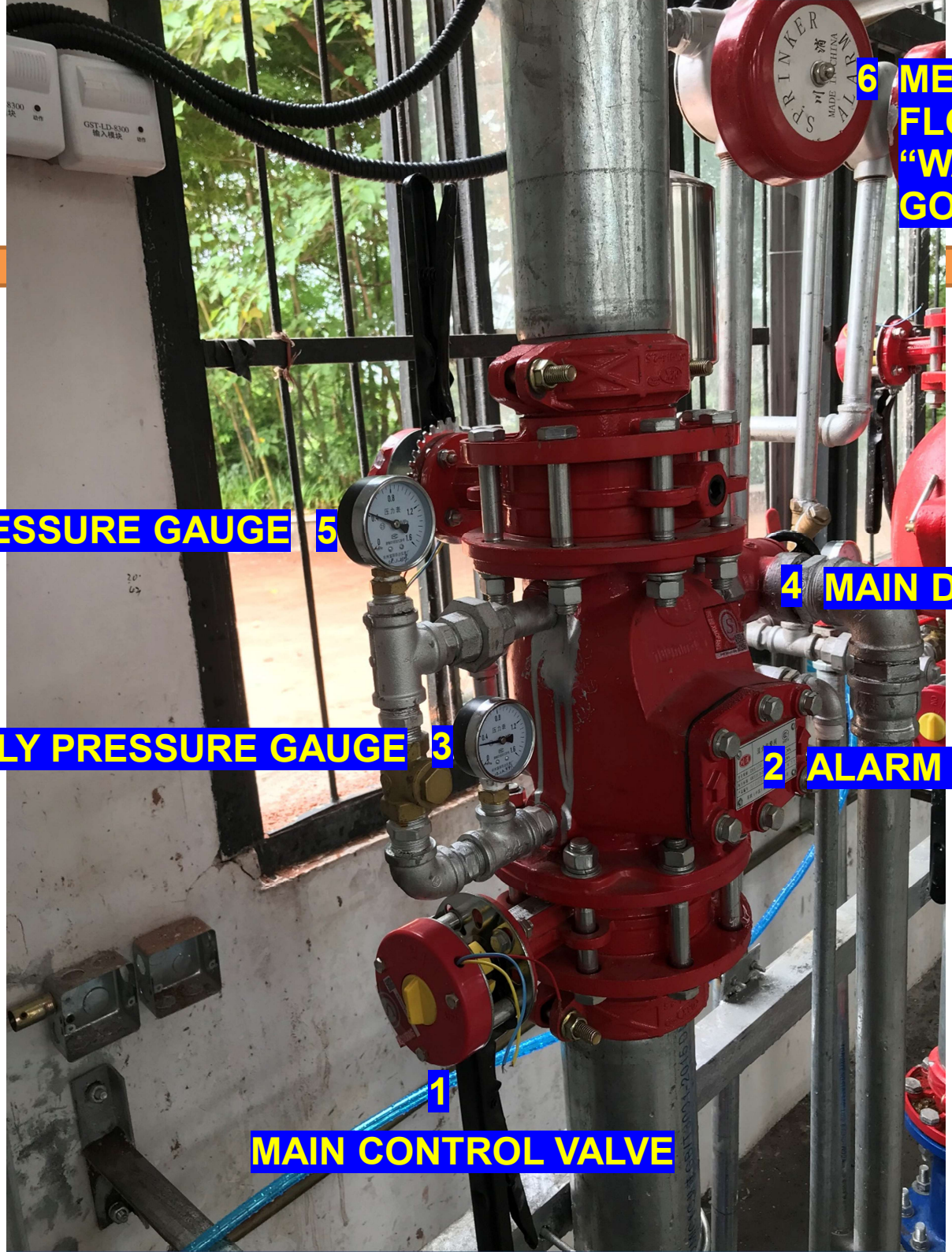
6 MECHANICAL WATER FLOW ALARM "WATER MOTOR GONG"
SYSTEM PRESSURE GAUGE 5
4 MAIN DRAIN
SUPPLY PRESSURE GAUGE 3
2 ALARM CHECK VALVE
1
MAIN CONTROL VALVE

Riser Practical Exam

- Conduct inspection
  - Identify main components and state their function
    - If certain components require supervision then state such
- Conduct alarm test
- Conduct main control valve test
- Conduct valve assessment/main drain test

Riser Practical Exam Procedure

- Notify, Notify, Notify
  - “Notify” Alarm Co, “Notify” Fire Department, “Notify” building occupants
- Inspection (Identify system parts and function and identify important missing items) (20)
  - Indicating Control Valve and Function and supervision
  - Main Drain and Function
  - Alarm Test Valve and Function
  - Alarm Line Valve and Function and supervision
  - Alarm (Check) Check Valve and Function
  - Retard Chamber and Function
  - Water Flow Switch (Water Motor Gong) and Function
  - Water Flow Switch (Electronic Pressure Switch) and Function
  - Alarm Line Drain and Function
  - Water Supply Pressure Gauge and Function
  - System Pressure Gauge

Riser Practical Exam Procedure

- Water flow Alarm Test
  - Frequency (electronic – semi-annually; mechanical - quarterly)
  - Locate Inspector's Test Valve in the lab
  - Student must identify that ITV is required to be used
  - Identify water discharge location (precautions)
  - Open alarm test valve
  - Measure time to alarm
  - Record time and compare to last test

Riser Practical Exam Procedure

- Main Control Valve Test
  - Frequency annually
  - Close valve
  - Discuss checking valve supervision status
  - Open valve
  - Discuss checking valve supervision status
  - Record findings

Riser Practical Exam Procedure

- Main Drain/Valve Assessment Test
  - Frequency annually
  - Record Static Pressure
  - Operate valve to full open
  - Record Residual Pressure
  - Close valve
  - Check Return to Static Pressure
- Notify, Notify, Notify
  - “Notify” Alarm Co, “Notify” Fire Department, “Notify” building occupants