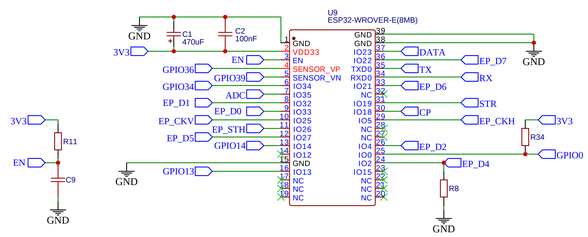

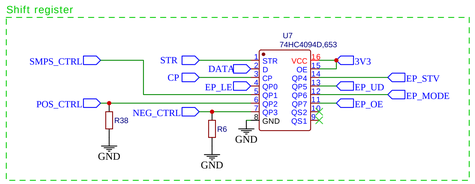

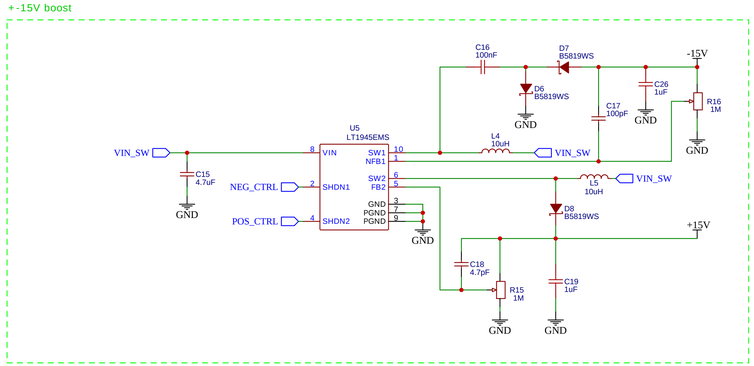

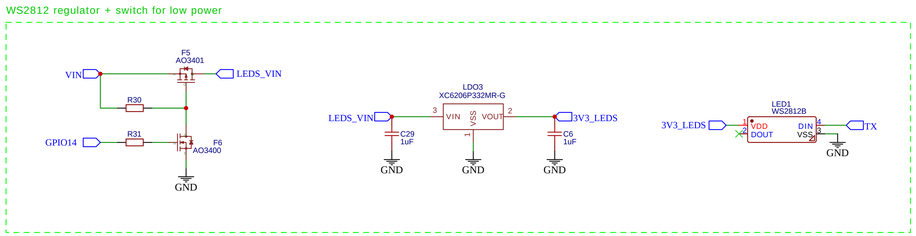

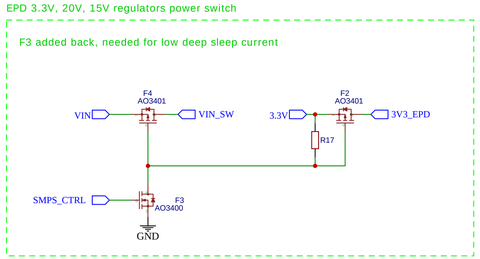

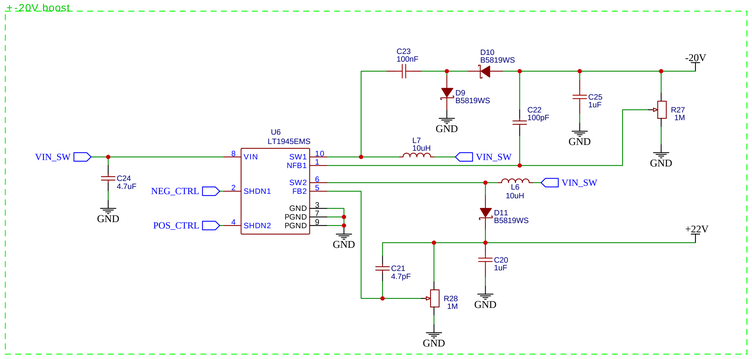

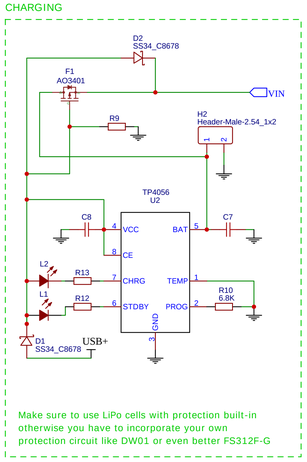

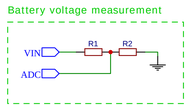

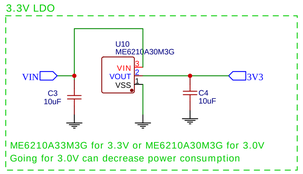

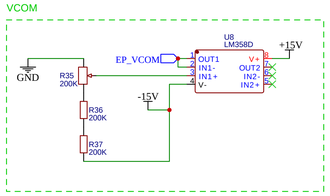

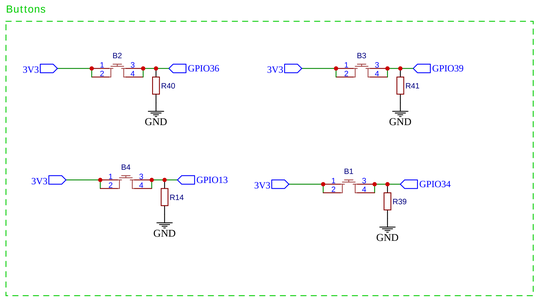

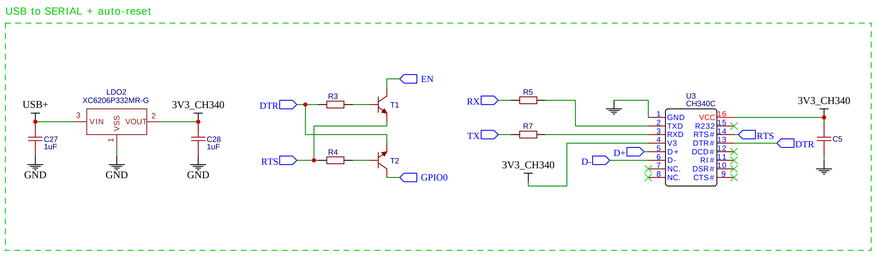

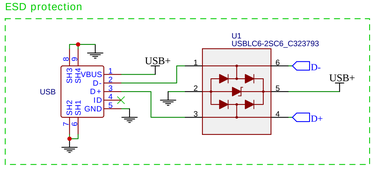

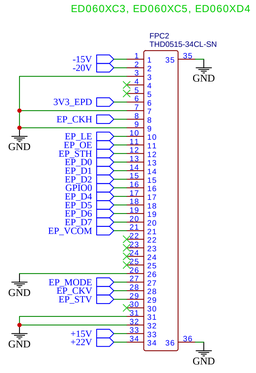

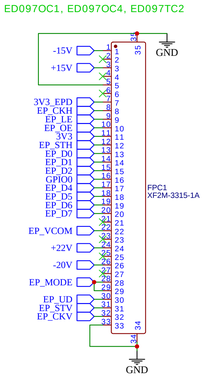

TITLE: 9.7in E-ink ESP32 controller	REV: 1.1
EasyEDA / Company:	Sheet: 1/1
Date: 2020-07-12	Drawn By: NiceThings