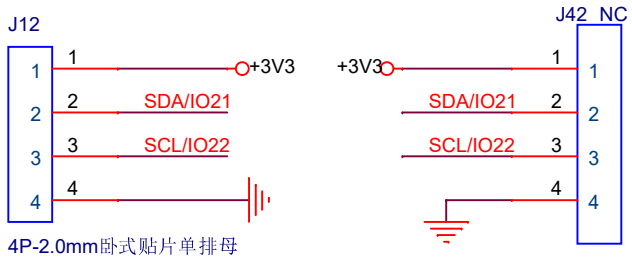

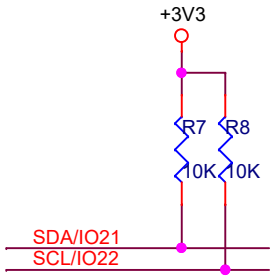

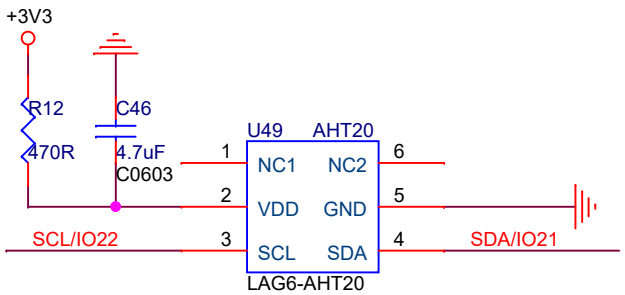

BMP280

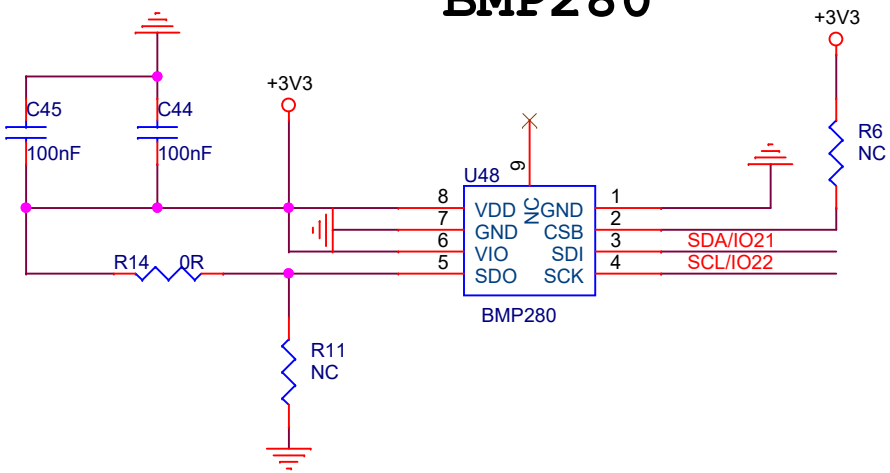

Title	<Title>	
Size A	Document Number <Doc>	Rev <RevCode>
Date: Wednesday, November 25, 2020	Sheet 1 of 1	