ESP32-C6

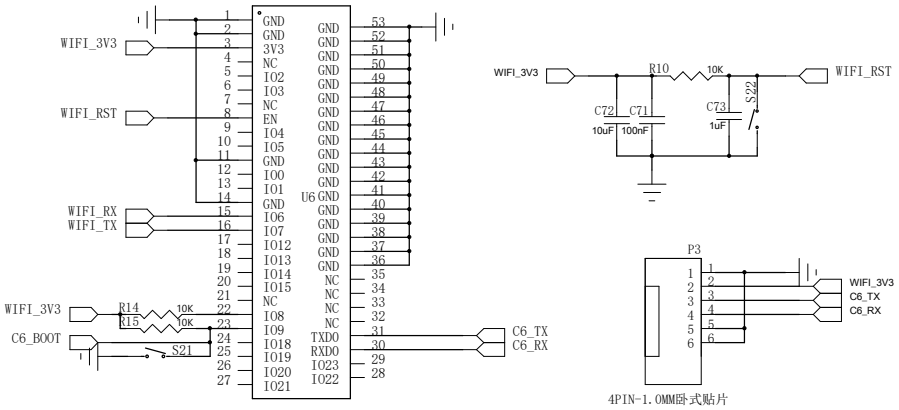

POWER

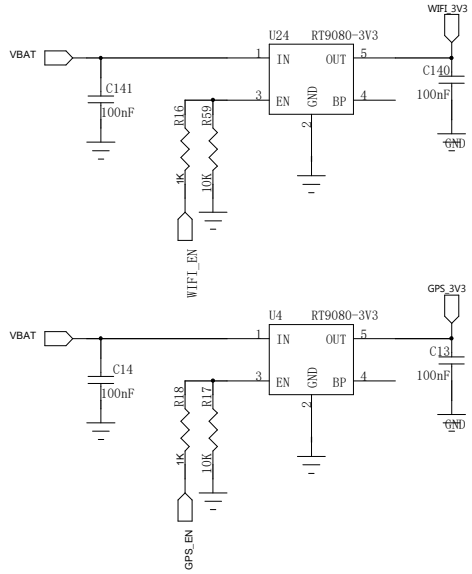

矩阵按键

I2C Address:0x34

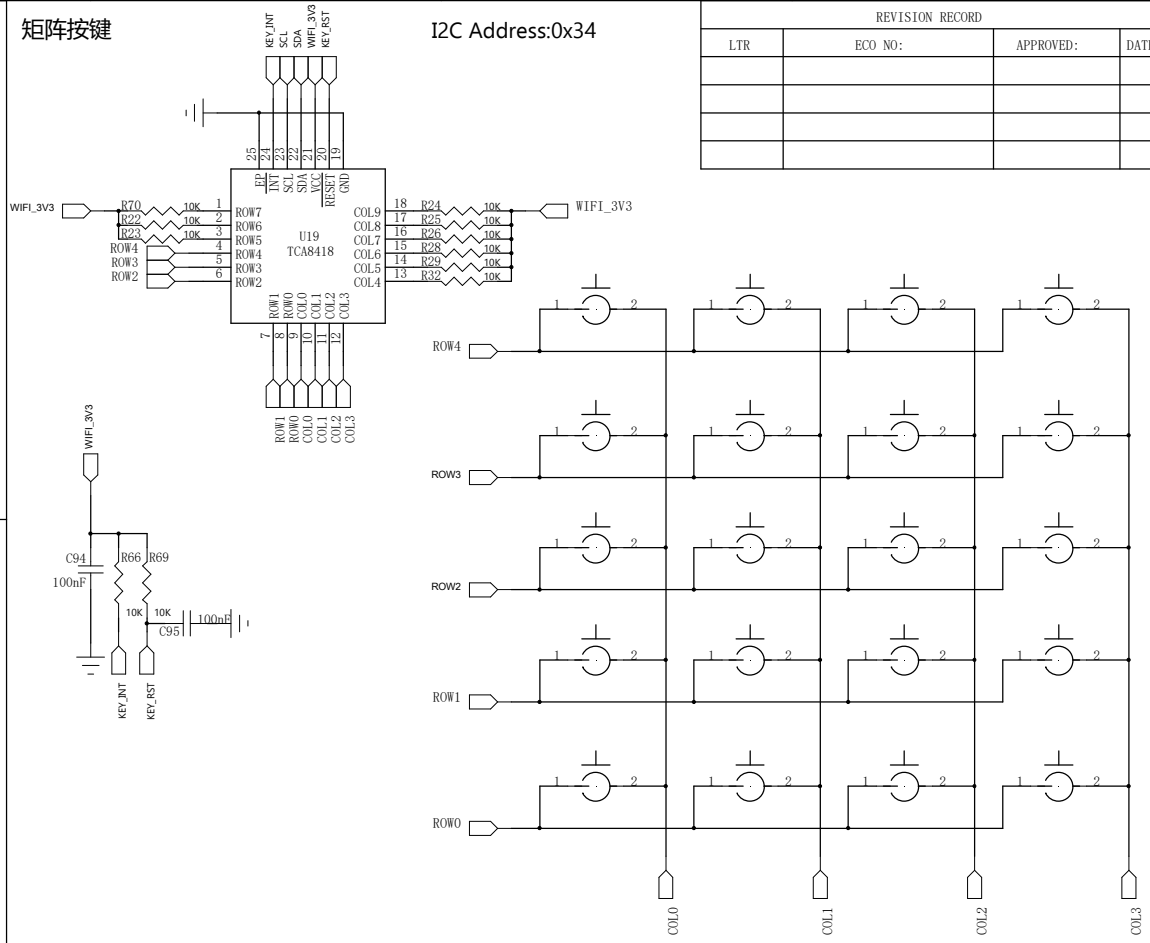

REVISION RECORD			
LTR	ECO NO:	APPROVED:	DATE:

COMPANY:			
TITLE:			
CODE:	SIZE: B	DRAWING NO:	REV:
SCALE:		SHEET: 1 OF 2	

DRAWN:	DATED:
CHECKED:	DATED:
QUALITY CONTROL:	DATED:
RELEASED:	DATED:

LED背光

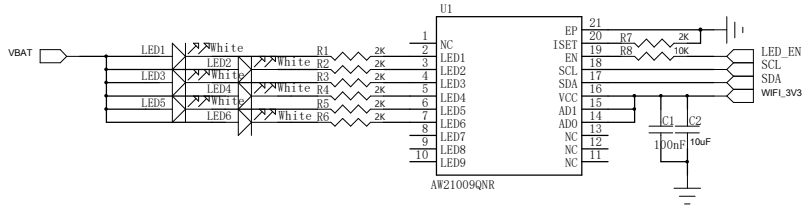

I2C Address:0x25

IO扩展

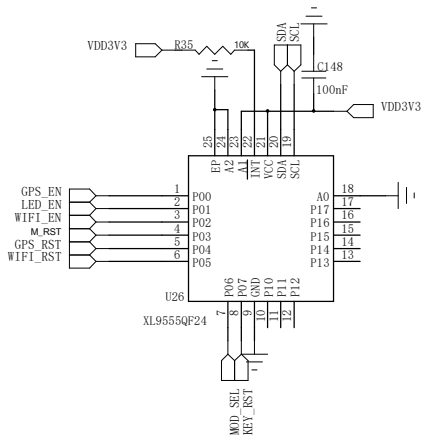

I2C Address:0x22

温湿度计

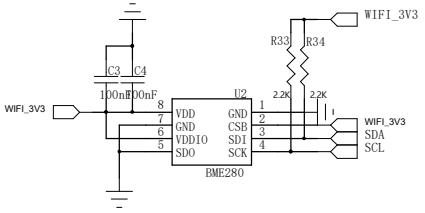

I2C Address:0x76

震动马达

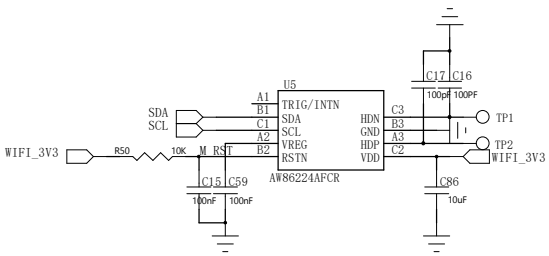

I2C Address:0x58

GPS

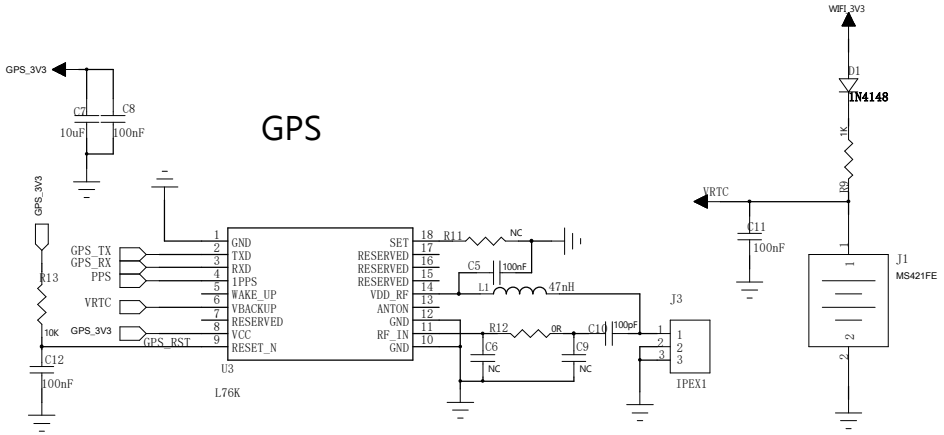

红外发射

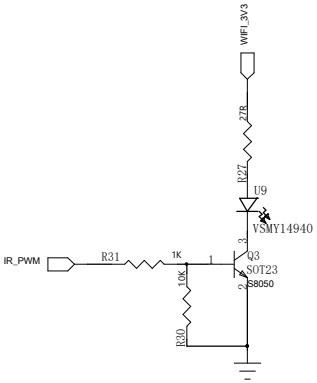
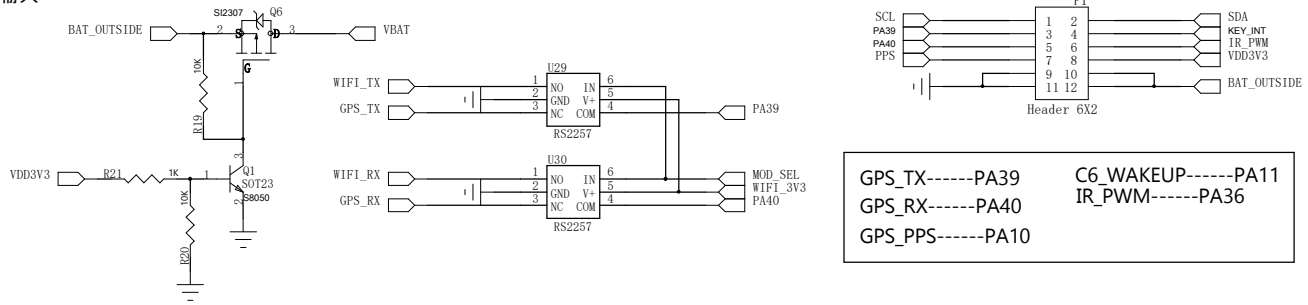
输入