接口

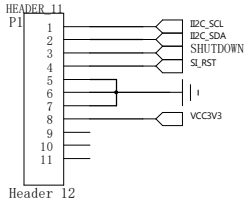
HEADER_11
P1
1
2
3
4
5
6
7
8
9
10
11
II2C_SCL
II2C_SDA
SHUTDOWN
SI_RST
VCC3V3
Header 12

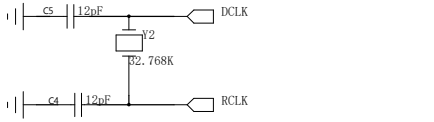
C5
12pF
DCLK
Y2
32.768K
C4
12pF
RCLK

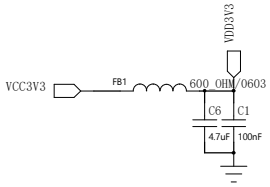
VDD3V3
VCC3V3
FB1
600 OHM/0603
C6
C1
4.7uF
100nF

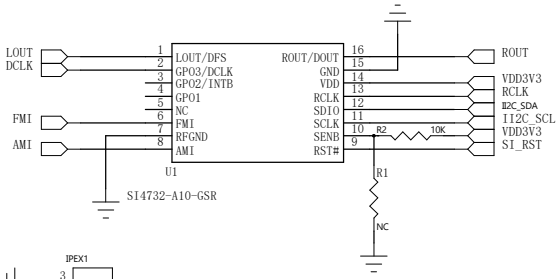
LOUT
DCLK
FMI
AMI
1
2
3
4
5
6
7
8
LOUT/DFS
GP03/DCLK
GP02/INTB
GP01
NC
FMI
RFGND
AMI
ROUT/DOUT
GND
VDD
RCLK
SDIO
SCLK
SENB
RST#
16
15
14
13
12
11
10
9
R2
10K
ROUT
VDD3V3
RCLK
II2C_SDA
II2C_SCL
VDD3V3
SI_RST
U1
SI4732-A10-GSR
R1
NC

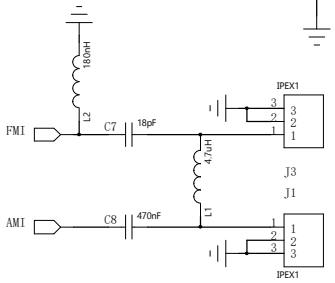
180nH
L2
FMI
C7
18pF
IPEX1
J3
4.7uH
L1
AMI
C8
470nF
J1
IPEX1

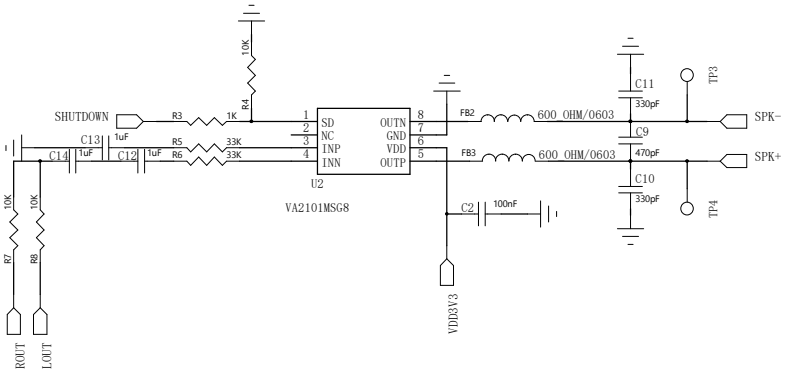
10K
R4
SHUTDOWN
R3
1K
C13
1uF
C14
1uF
C12
1uF
R5
33K
R6
33K
SD
NC
INP
INN
OUTN
GND
VDD
OUTP
U2
VA2101MSG8
FB2
600 OHM/0603
FB3
600 OHM/0603
C11
330pF
C9
470pF
C10
330pF
TP3
TP4
SPK-
SPK+
C2
100nF
VDD3V3
10K
R7
10K
R8
ROUT
LOUT