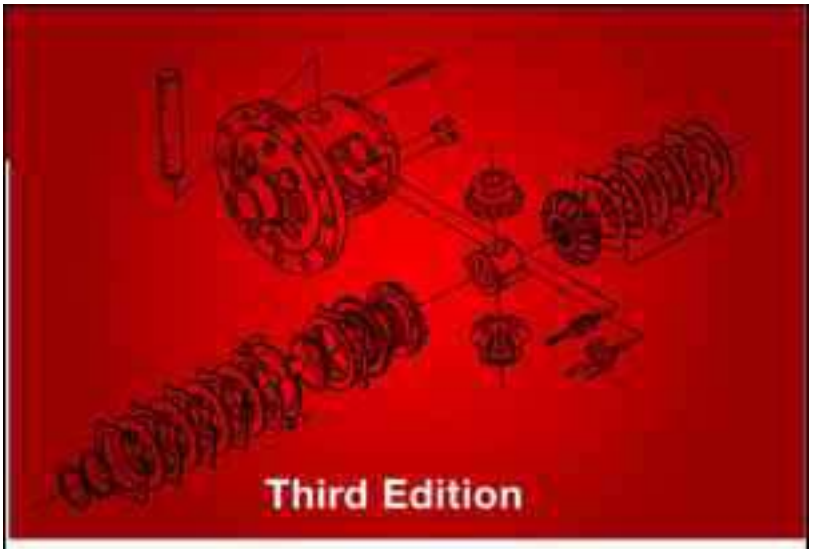

Third Edition

THEORY OF MACHINES

S S RATTAN

THEORY OF
MACHINES

ABOUT THE AUTHOR

S S Rattan is currently serving as a Professor in the Department of Mechanical Engineering at the National Institute of Technology, Kurukshetra. He did his post-graduation in Mechanical Engineering from Punjab Engineering College, Chandigarh, in 1981. Since then he has been engaged in teaching and research. He obtained his PhD degree from Kurukshetra University in 1995. He has authored several research papers which have been published in national and international journals as well as in the proceedings of conferences in India and abroad. Besides these, Dr Rattan is the author of two other books titled *Strength of Materials* and *Fluid Mechanics and Fluid Machines*. He is also a member of the Indian Society of Theoretical and Applied Mechanics.

THEORY OF MACHINES

S S Rattan
Professor of Mechanical Engineering
National Institute of Technology
Kurukshetra

Tata McGraw Hill Education Private Limited
NEW DELHI

McGraw-Hill Offices

New Delhi New York St Louis San Francisco Auckland Bogotá Caracas
Kuala Lumpur Lisbon London Madrid Mexico City Milan Montreal
San Juan Santiago Singapore Sydney Tokyo Toronto

Tata McGraw Hill

Published by the Tata McGraw Hill Education Private Limited,
7 West Patel Nagar, New Delhi 110 008.

Copyright © 2009 by Tata McGraw Hill Education Private Limited.
No part of this publication may be reproduced or distributed in any form or by any means, electronic, mechanical, photocopying, recording, or otherwise or stored in a database or retrieval system without the prior written permission of the publishers. The program listing (if any) may be entered, stored and executed in a computer system, but they may not be reproduced for publication.

This edition can be exported from India only by the publishers,
Tata McGraw Hill Education Private Limited.

ISBN 13: **978-0-07-014477-4**
ISBN 10: **0-07-014477-X**

Managing Director: *Ajay Shukla*

General Manager: Publishing—SEM & Tech Ed: *Vibha Mahajan*
Manager—Sponsoring: *Shalini Jha*
Assoc. Sponsoring Editor: *Suman Sen*
Executive—Editorial Services: *Sohini Mukherjee*
Sr. Production Manager: *P L Pandita*

General Manager: Marketing—Higher Education: *Michael J Cruz*
Sr. Product Manager: SEM & Tech Ed: *Biju Ganesan*

General Manager—Production: *Rajender P Ghansela*
Asst. General Manager—Production: *B L Dogra*

Information contained in this work has been obtained by Tata McGraw Hill, from sources believed to be reliable. However, neither Tata McGraw Hill nor its authors guarantee the accuracy or completeness of any information published herein, and neither Tata McGraw Hill nor its authors shall be responsible for any errors, omissions, or damages arising out of use of this information. This work is published with the understanding that Tata McGraw Hill and its authors are supplying information but are not attempting to render engineering or other professional services. If such services are required, the assistance of an appropriate professional should be sought.

Typeset at Bukprint India, B-180A, Guru Nanak Pura, Laxmi Nagar-110 092 and printed at Gopal Jee Enterprises, 190/5 Main Road, Maujpur, Delhi 110 053

Cover: SDR Printers

RLXZRRAFRBZXL

The McGraw·Hill Companies

In
the memory of
My Father

CONTENTS

Preface *xv*
List of Reviewers *xvii*
Visual Walkthrough *xviii*

1. Mechanisms and Machines **1**

1.1 Mechanism and Machine *1*
1.2 Types of Constrained Motion *2*
1.3 Rigid and Resistant Bodies *3*
1.4 Link *3*
1.5 Kinematic Pair *3*
1.6 Types of Joints *5*
1.7 Degrees of Freedom *5*
1.8 Classification of Kinematic Pairs *6*
1.9 Kinematic Chain *6*
1.10 Linkage, Mechanism and Structure *7*
1.11 Mobility of Mechanisms *7*
1.12 Equivalent Mechanisms *14*
1.13 The Four-bar Chain *18*
1.14 Mechanical Advantage *23*
1.15 Transmission Angle *23*
1.16 The Slider-crank Chain *27*
1.17 Double Slider-crank Chain *30*
1.18 Miscellaneous Mechanisms *32*
Summary *34*
Exercises *35*

2. VelocityAnalysis **38**

2.1 Absolute and Relative Motions *38*
2.2 Vectors *38*
2.3 Addition and Subtraction of Vectors *39*
2.4 Motion of a Link *40*
2.5 Four-link Mechanism *41*
2.6 Velocity Images *42*
2.7 Angular Velocity of Links *43*
2.8 Velocity of Rubbing *43*
2.9 Slider-crank Mechanism *44*
2.10 Crank- and Slotted-lever Mechanism *54*
2.11 Algebraic Methods *62*
2.12 Instantaneous Centre (I-Centre) *64*
2.13 Kennedy's Theorem *65*

2.14 Locating I-Centres *66*
2.15 Angular-velocity-ratio Theorem *68*
2.16 Centrode *74*
Summary *76*
Exercises *76*

3. Acceleration Analysis **79**

3.1 Acceleration 79
3.2 Four-link Mechanism *81*
3.3 Acceleration of Intermediate and Offset Points *83*
3.4 Slider-crank Mechanism *85*
3.5 Coriolis Acceleration Component *97*
3.6 Crank and Slotted-lever Mechanism *99*
3.7 Algebraic Methods *110*
3.8 Klein's Construction *112*
3.9 Velocity and Acceleration from Displacement–time Curve *113*
3.10 Centre of Curvature *114*
3.11 Hartmann Construction *115*
3.12 Euler–Savary Equation *116*
3.13 Bobillier Construction *118*
3.14 Cubic of Stationary Curvature *120*
Summary *121*
Exercises *122*

4. Computer-aided Analysis of Mechanisms **124**

4.1 Four-link Mechanism *124*
4.2 Use of Complex Algebra *131*
4.3 The Vector Method *132*
4.4 Slider-crank Mechanism *136*
4.5 Coupler Curves *140*
Summary *142*
Exercises *143*

5. Graphical and Computer-aided Synthesis of Mechanisms **144**

Part A: Graphical Methods
5.1 Pole *144*
5.2 Relative Pole *146*
5.3 Function Generation by Relative Pole Method *148*
5.4 Inversion Method *151*
5.5 Function Generation by Inversion Method *151*
5.6 Path Generation *155*
5.7 Motion Generation (Rigid-body Guidance) *158*
Part B: Computer-aided Synthesis of Mechanisms
5.8 Function Generation *159*
5.9 Chebychev Spacing *166*
5.10 Path Generation *169*

5.11 Motion Generation (Rigid-body Guidance) *175*
Summary *179*
Exercises *179*

6. Lower Pairs **181**

6.1 Pantograph *181*
6.2 Straight-line Mechanisms *182*
6.3 Engine Indicators *190*
6.4 Automobile Steering Gears *194*
6.5 Types of Steering Gears *195*
6.6 Hooke's Joint *198*
6.7 Double Hooke's Joint *205*
Summary *206*
Exercises *207*

7. Cams **209**

7.1 Types of Cams *209*
7.2 Types of Followers *212*
7.3 Definitions *213*
7.4 Follower Displacement Programming *214*
7.5 Derivatives of Follower Motion *215*
7.6 High-speed Cams *216*
7.7 Undercutting *216*
7.8 Motions of the Follower *217*
7.9 Layout of Cam Profiles *223*
7.10 Cams with Specified Contours *232*
7.11 Analysis of a Rigid Eccentric Cam *241*
7.12 Analysis of an Elastic Cam System *244*
7.13 Spring Surge, Unbalance and Wind Up *246*
Summary *247*
Exercises *247*

8. Friction **250**

8.1 Kinds of Friction *250*
8.2 Laws of Friction *251*
8.3 Coefficient of Friction *251*
8.4 Inclined Plane *252*
8.5 Screw Threads *256*
8.6 Screw Jack *262*
8.7 Wedge *265*
8.8 Pivots and Collars *268*
8.9 Friction Clutches *274*
8.10 Rolling Friction *285*
8.11 Anti-friction Bearings *285*
8.12 Greasy Friction *286*
8.13 Greasy Friction at a Journal *286*

8.14 Friction Axis of a Link *287*
8.15 Film Friction *290*
8.16 Mitchell Thrust Bearing *291*
Summary *292*
Exercises *293*

9. Belts, Ropes and Chains **296**

9.1 Belt and Rope Drives *296*
9.2 Open- and Crossed-belt Drives *298*
9.3 Action of Belts on Pulleys *298*
9.4 Velocity Ratio *299*
9.5 Slip *299*
9.6 Material for Belts and Ropes *301*
9.7 Crowing of Pulleys *301*
9.8 Types of Pulleys *302*
9.9 Law of Belting *304*
9.10 Length of Belt *304*
9.11 One (Stepped) Pulleys *307*
9.12 Ratio of Friction Tensions *310*
9.13 Power Transmitted *312*
9.14 Centrifugal Effect on Belts *315*
9.15 Maximum Power Transmitted by a Belt *316*
9.16 Initial Tension *320*
9.17 Creep *324*
9.18 Chains *325*
9.19 Chain Length *326*
9.20 Angular Speed Ratio *327*
9.21 Classification of Chains *328*
Summary *329*
Exercises *330*

10. Gears **332**

10.1 Classification of Gears *333*
10.2 Gear Terminology *337*
10.3 Law of Gearing *342*
10.4 Velocity of Sliding *343*
10.5 Forms of Teeth *343*
10.6 Cycloidal Profile Teeth *343*
10.7 Involute Profile Teeth *345*
10.8 Interchangeable Gears *348*
10.9 Non-standard Gears *348*
10.10 Path of Contact *349*
10.11 Arc of Contact *350*
10.12 Number of Pairs of Teeth in Contact (Contact Ratio) *351*
10.13 Interference in Involute Gears *354*
10.14 Minimum Number of Teeth *355*

10.15 Interference Between Rack and Pinion *360*
10.16 Undercutting *361*
10.17 Comparison of Cycloidal and Involute Tooth Forms *362*
10.18 Helical and Spiral Gears *362*
10.19 Terminology of Helical Gears *364*
10.20 Velocity Ratio and Centre Distance of Helical Gears *364*
10.21 Helical Gear Forces and Efficiency *365*
10.22 Worm and Worm Gear *369*
10.23 Terminology of Worm Gears *370*
10.24 Velocity Ratio and Centre Distance of Worm Gears *370*
10.25 Efficiency of Worm Gears *371*
10.26 Bevel Gears *372*
Summary *374*
Exercises *375*

11. Gear Trains **378**

11.1 Simple Gear Train *378*
11.2 Compound Gear Train *379*
11.3 Reverted Gear Train *380*
11.4 Planetary or Epicyclic Gear Train *381*
11.5 Analysis of Epicyclic Gear Train *382*
11.6 Torques in Epicyclic Trains *390*
11.7 Sun and Planet Gear *394*
11.8 Bevel Epicyclic Gear *397*
11.9 Compound Epicyclic Gear *399*
11.10 Automotive Transmission Gear Trains *400*
11.11 Differentials *405*
Summary *407*
Exercises *407*

12. Static Force Analysis **410**

12.1 Constraint and Applied Forces *410*
12.2 Static Equilibrium *410*
12.3 Equilibrium of Two- and Three-force Members *411*
12.4 Member With Two Forces and a Torque *412*
12.5 Equilibrium of Four-force Members *412*
12.6 Force Convention *413*
12.7 Free-body Diagrams *413*
12.8 Superposition *414*
12.9 Principle of Virtual Work *426*
12.10 Friction in Mechanisms *428*
Summary *431*
Exercises *432*

13. Dynamic Force Analysis **434**

13.1 D′alembert's Principle *434*

13.2 Equivalent Offset Inertia Force *435*
13.3 Dynamic Analysis of Four-link Mechanisms *435*
13.4 Dynamic Analysis of Slider-crank Mechanisms *437*
13.5 Velocity and Acceleration of a Piston *437*
13.6 Angular Velocity and Angular Acceleration of Connecting Rod *439*
13.7 Engine Force Analysis *440*
13.7 Turning Moment on Crankshaft *441*
13.8 Dynamically Equivalent System *445*
13.9 Inertia of the Connecting Rod *446*
13.10 Inertia Force in Reciprocating Engines (Graphical Method) *449*
13.11 Turning-moment Diagrams *458*
13.12 Fluctuation of Energy *460*
13.13 Flywheels *461*
13.14 Dimensions of Flywheel Rims *469*
13.15 Punching Presses *471*
Summary *474*
Exercises *474*

14. Balancing **477**

14.1 Static Balancing *477*
14.2 Dynamic Balancing *480*
14.3 Transference of a Force From One Plane to Another *480*
14.4 Balancing of Several Masses in Different Planes *481*
14.5 Force Balancing of Linkages *488*
14.6 Balancing of Reciprocating Mass *490*
14.7 Balancing of Locomotives *492*
14.8 Effects of Partial Balancing in Locomotives *492*
14.9 Secondary Balancing *496*
14.10 Balancing of Inline Engines *497*
14.11 Balancing of V-engines *509*
14.12 Balancing of W, V-8 and V-12 Engines *513*
14.13 Balancing of Radial Engines *515*
14.14 Balancing Machines *520*
14.15 Field Balancing *524*
Summary *526*
Exercises *527*

15. Brakes and Dynamometers **530**

15.1 Types of Brakes *530*
15.2 Block or Shoe Brake *530*
15.3 Band Brake *536*
15.4 Band and Block Brake *541*
15.5 Internal Expanding Shoe Brake *544*
15.6 Effect of Braking *547*
15.7 Types of Dynamometers *549*
15.8 Prony Brake Dynamometer *550*

15.9 Rope Brake Dynamometer *550*
15.10 Belt Transmission Dynamometer *551*
15.11 Epicyclic-train Dynamometer *552*
15.12 Bevis–Gibson Torsion Dynamometer *553*
15.13 Automotive Propulsion *553*
Summary *556*
Exercises *556*

16. Governors **559**

16.1 Types of Governors *559*
16.2 Watt Governor (Simple Conical Governor) *560*
16.3 Porter Governor *562*
16.4 Proell Governor *566*
16.5 Hartnell Governor *569*
16.6 Hartung Governor *574*
16.7 Wilson–Hartnell Governor (Radial-spring Governor) *575*
16.8 Pickering Governor *578*
16.9 Spring-controlled Gravity Governor *579*
16.10 Inertia Governor *580*
16.11 Sensitiveness of a Governor *582*
16.12 Hunting *582*
16.13 Isochronism *583*
16.14 Stability *583*
16.15 Effort of a Governor *583*
16.16 Power of a Governor *585*
16.17 Controlling Force *589*
Summary *594*
Exercises *594*

17. Gyroscope **597**

17.1 Angular Velocity *597*
17.2 Angular Acceleration *597*
17.3 Gyroscopic Torque (Couple) *599*
17.4 Gyroscopic Effect on Aeroplanes *601*
17.5 Gyroscopic Effect on Naval Ships *602*
17.6 Stability of an Automobile *605*
17.7 Stability of a Two-wheel Vehicle *610*
17.8 Rigid Disc at an Angle Fixed to a Rotating Shaft *612*
Summary *613*
Exercises *613*

18. Vibrations **615**

18.1 Definitions *615*
18.2 Types of Vibrations *616*
18.3 Basic Features of Vibrating Systems *616*
18.4 Degrees of Freedom *617*

Section-I (Longitudinal Vibrations) *618*
18.5 Free Longitudinal Vibrations *618*
18.6 Displacement, Velocity and Acceleration *623*
18.7 Inertia Effect of the Mass of Spring *624*
18.8 Damped Vibrations *629*
18.9 Logarithmic Decrement *633*
18.10 Forced Vibrations *636*
18.11 Forced-damped Vibrations *638*
18.12 Magnification Factor *641*
18.13 Vibration Isolation and Transmissibility *644*
18.14 Forcing Due to Unbalance *646*
18.15 Forcing Due to Support Motion *648*
Section II (Transverse Vibrations) *650*
18.16 Single Concentrated Load *650*
18.17 Uniformly Loaded Shaft *651*
18.18 Shaft Carrying Several Loads *654*
18.19 Whirling of Shafts *657*
Section III (Torsional Vibration) *659*
18.20 Free Torsional Vibrations (Single Rotor) *659*
18.21 Inertia Effect of Mass of Shaft *660*
18.22 Multifilar Systems *661*
18.23 Free Torsional Vibrations (Two-rotor System) *666*
18.24 Free Torsional Vibrations (Three-rotor System) *667*
18.25 Torsionally Equivalent Shaft *668*
18.26 Free Torsional Vibrations of Geared System *671*
Summary *673*
Exercises *674*

19. Automatic Control **677**

19.1 Open and Closed-loop Control (Unmonitored and Monitored Control) *677*
19.2 Amplification *678*
19.3 Actuator (Servomotor) *678*
19.4 Transducer *678*
19.5 Block Diagrams *678*
19.6 Lag in Response *679*
19.7 Damping *680*
19.8 First-order System Response *680*
19.9 Second-order System Response *682*
19.10 Transfer Function *682*
19.11 Transfer Function Relationships *685*
Summary *686*
Exercises *686*

Appendix I ***687***
Appendix II ***702***
Index ***705***

PREFACE

Mechanisms and machines have considerable fascination for most students of mechanical engineering since the theoretical principles involved have immediate applications to practical problems. The main objective of writing this book has been to give a clear understanding of the concepts underlying engineering design. A sincere effort has been made to maintain the physical perceptions in the various derivations and to give the shortest comprehending solution to a variety of problems. The parameters kept in mind while writing the book are the coverage of contents, prerequisite knowledge of students, lucidity of writing, clarity of diagrams and the variety of solved and unsolved numerical problems.

The book is meant to be useful to the degree-level students of mechanical engineering as well as those preparing for AMIE and various other competitive examinations. However, diploma-level students will also find the book to be highly useful. The book will also benefit postgraduate students to some extent as it also contains advanced topics like curvature theory, analysis of rigid and elastic cam systems, complex number and vector methods, force balancing of linkages and field balancing. The salient features of the book are

- Concise and compact covering all major topics
- Presentation of concepts in a logical, innovative and lucid manner
- Evolving the basic theory from simple and readily understood principles
- A balanced presentation of the graphical and analytical approaches
- Computer programs in user-friendly C-language
- Large number of solved examples
- Summary, review questions as well as a number of unsolved problems at the end of each chapter
- An appendix containing objective-type questions
- Another appendix containing important relations and results

It is expected that the students using this book might have completed a course in applied mechanics. The book is divided broadly into two sections, kinematics and dynamics of machines. Kinematics involves study from the geometric point of view to know the displacement, velocity and acceleration of various components of mechanisms, whereas dynamics is the study of the effects of the applied and inertia forces. Chapters 1 to 11 are devoted to the study of the kinematics and the rest to that of dynamics. **Chapter 1** introduces the concepts of mechanisms and machines. **Chapters 2 and 3** describe graphical methods of velocity and acceleration analysis whereas the analytical approach is discussed in **Chapter 4**. Synthesis or designing of mechanisms is important to have the desirable motion of various components of machinery—the detail procedures for the same, both graphical and analytical, are given in **Chapter 5**. Various types of mechanisms with higher number of links are discussed in **Chapter 6**. Friction in various components of machines is very important as it affects their efficiency and is described in **Chapter 8**. Cams, belts, gears, gear trains are meant to transmit power from one shaft to another and are discussed in **chapters 7, 9, 10 and 11** respectively.

Forces are mainly of static and dynamic nature. **Chapters 12 and 13** are devoted to their effects on the components of the mechanisms. **Chapter 13** also includes the topic of flywheels which are essential components for rotary machines to regulate speeds. Speed regulation is also affected by governors which are described in **Chapter 16**. Unbalanced forces and vibrations in various components of rotating machines are mostly undesirable since the efficiency is reduced. A detailed study of these is undertaken in **chapters 14 and 18**. Brakes are essential for any moving components of machinery and are discussed in **Chapter 15**.

Moving bodies like aeroplanes, ships, two- and four-wheelers, etc., experience gyroscopic effect while taking turns. It is described in **Chapter 17**. Automatic control of machinery is very much desirable these days and an introduction of the same is given in **Chapter 19**.

The first edition of the book aimed at providing the fundamentals of the subject in a simple manner for easy comprehension by students. Simple mathematical methods were preferred instead of more elegant but less obvious methods so that those with limited mathematical skills could easily understand the expositions. However, to make the book more purposeful and acceptable to a wider section of users, the second edition also consisted of methods involving vector and complex numbers usually preferred by those who excel in mathematical skills. Such methods frequently lead to computer-aided solutions of the problems. The computer programs were rewritten in the more user-friendly C language. A Summary of each chapter was added at the end and theoretical questions were added to the exercises. One appendix containing objective-type questions was also included. All the previous figures were redrawn.

The present edition is aimed at making the book more exhaustive. Many more worked examples as well as unsolved problems have been added. Many new sections have been added in most of the chapters apart from rewriting some previous sections. Another appendix containing important relations and results has also been added. Effort has been made to remove all sorts of errors and misprints as far as possible. In spite of addition of a large amount of material, care has been taken to let the book remain concise and compact. Hints to most of the numerical problems at the end of each chapter have been provided at the publisher's website of the book for the benefit of average and weak students. Full solutions of the same are available to the faculty members at the same site. The facility can be availed by logging on to http://www.mhhe.com/rattan/tom3e.

I am grateful to all those teachers and students who pointed out errors and mistakes of the previous editions and also gave many valuable suggestions. I acknowledge the efforts of the editorial staff of Tata McGraw Hill Education Private Limited for bringing out the new edition in an excellent format.

Finally, I make an affectionate acknowledgement to my wife, Neena, and my children, Ravneet and Jasmeet, for their patience, support and putting up with it all so cheerfully. But for their sacrifice, I would not have been able to complete this work in the most satisfying way.

For further improvement of the book, readers are requested to post their comments and suggestions at ss_rattan@hotmail.com.

S S Rattan

LIST OF REVIEWERS

S S Pathak	*IEC College of Engineering and Technology* *Noida, Uttar Pradesh*
L D Garg	*Punjab Engineering College* *Chandigarh, Punjab*
K S Sajikumar	*College of Engineering* *Trivandrum, Kerala*
K R Arun Prasad	*SRM Institute of Science and Technology* *Chennai, Tamil Nadu*
G Balaji	*PSNA College of Engineering and Technology* *Dindigul, Tamil Nadu*
Monoj Barai	*Future Institute of Engineering and Management* *Kolkata, West Bengal*
N P Mukherjee	*Dr B C Roy Engineering College* *Durgapur, West Bengal*
Uday V Asolekar	*Vidyawardhini's College of Engineering and Technology, Mumbai University* *Thane, Maharashtra*
P V Srihari	*R V College of Engineering* *Bangalore, Karnataka*

VISUAL WALKTHROUGH

Introduction at the beginning of each chapter sums up the aim and contents of the chapter.

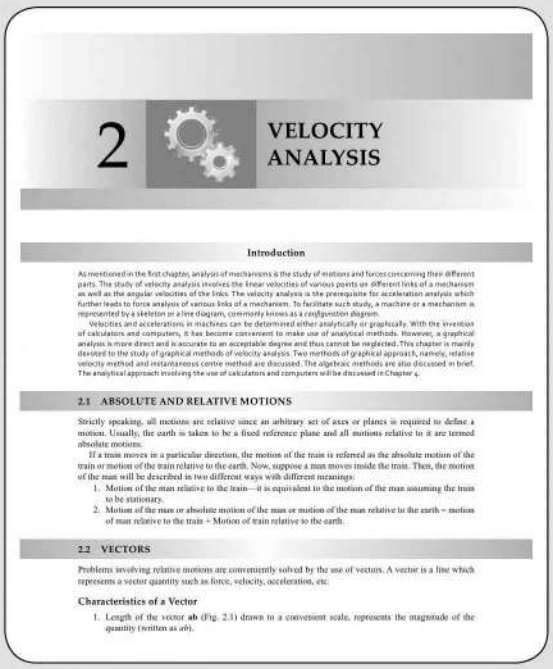

2 VELOCITY ANALYSIS

Introduction

As mentioned in the first chapter, analysis of mechanisms is the study of motions and forces concerning their different parts. The study of velocity analysis involves the linear velocities of various points on different links of a mechanism as well as the angular velocities of the links. The velocity analysis is the prerequisite for acceleration analysis which further leads to force analysis of various links of a mechanism. To facilitate such study, a machine or a mechanism is represented by a skeleton or a line diagram, commonly known as a configuration diagram.

Velocities and accelerations in machines can be determined either analytically or graphically. With the invention of calculators and computers, it has become convenient to make use of analytical methods. However, a graphical analysis is more direct and is accurate to an acceptable degree and thus cannot be neglected. This chapter is mainly devoted to the study of graphical methods of velocity analysis. Two methods of graphical approach, namely, relative velocity method and instantaneous centre method are discussed. The algebraic methods are also discussed in brief. The analytical approach involving the use of calculators and computers will be discussed in Chapter 4.

2.1 ABSOLUTE AND RELATIVE MOTIONS

Strictly speaking, all motions are relative since an arbitrary set of axes or planes is required to define a motion. Usually, the earth is taken to be a fixed reference plane and all motions relative to it are termed absolute motions.

If a man moves in a particular direction, the motion of the train is referred as the absolute motion of the train or motion of the train relative to the earth. Now, suppose a man moves inside the train. Then, the motion of the man will be described in two different ways with different meanings:

1. Motion of the man relative to the train—it is equivalent to the motion of the man assuming the train to be stationary.
2. Motion of the man or absolute motion of the man or motion of the man relative to the earth = motion of man relative to the train + Motion of train relative to the earth.

2.2 VECTORS

Problems involving relative motions are conveniently solved by the use of vectors. A vector is a line which represents a vector quantity such as force, velocity, acceleration, etc.

Characteristics of a Vector

1. Length of the vector **ab** (Fig. 2.1) drawn to a convenient scale, represents the magnitude of the quantity (written as *ab*).

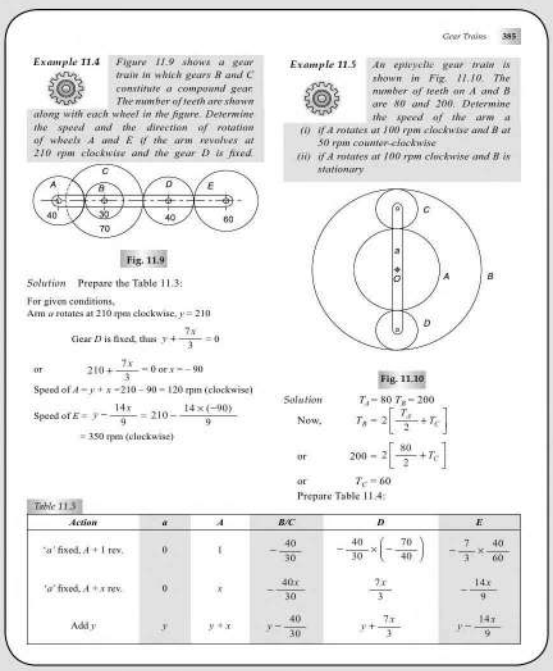

Gear Trains 385

Example 11.4 *Figure 11.9 shows a gear train in which gears B and C constitute a compound gear. The number of teeth are shown along with each wheel in the figure. Determine the speed and the direction of rotation of wheels A and E if the arm revolves at 210 rpm clockwise and the gear D is fixed.*

Fig. 11.9

Solution Prepare the Table 11.3:

For given conditions,
Arm *a* rotates at 210 rpm clockwise, $y = 210$

Gear *D* is fixed, thus $y + \frac{7x}{3} = 0$

or $210 + \frac{7x}{3} = 0$ or $x = -90$

Speed of $A = y + x = 210 - 90 = 120$ rpm (clockwise)

Speed of $E = y - \frac{14x}{9} = 210 - \frac{14 \times (-90)}{9}$

$= 350$ rpm (clockwise)

Example 11.5 *An epicyclic gear train is shown in Fig. 11.10. The number of teeth on A and B are 80 and 200. Determine the speed of the arm a*

(i) if A rotates at 100 rpm clockwise and B at 50 rpm counter-clockwise

(ii) if A rotates at 100 rpm clockwise and B is stationary

Fig. 11.10

Solution $T_A = 80$ $T_B = 200$

Now, $T_B = 2\left[\frac{T_A}{2} + T_C\right]$

or $200 = 2\left[\frac{80}{2} + T_C\right]$

or $T_C = 60$

Prepare Table 11.4:

Table 11.3

Action	a	A	B/C	D	E
'a' fixed, $A + 1$ rev.	0	1	$-\frac{40}{30}$	$-\frac{40}{30} \times \left(-\frac{70}{40}\right)$	$-\frac{7}{3} \times \frac{40}{60}$
'a' fixed, $A + x$ rev.	0	x	$-\frac{40x}{30}$	$\frac{7x}{3}$	$-\frac{14x}{9}$
Add y	y	$y + x$	$y - \frac{40}{30}$	$y + \frac{7x}{3}$	$y - \frac{14x}{9}$

A variety of solved examples are given to reinforce the concepts.

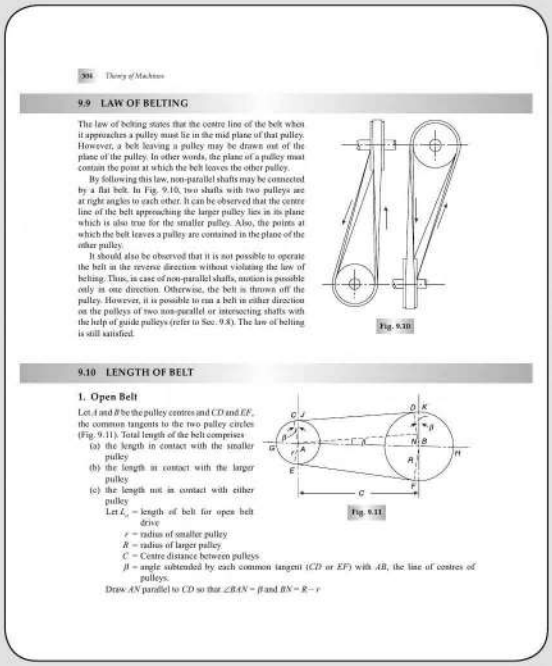

304 Theory of Machines

9.9 LAW OF BELTING

The law of belting states that the centre line of the belt when it approaches a pulley must lie in the mid plane of that pulley. However, a belt leaving a pulley may be drawn out of the plane of the pulley. In other words, the plane of a pulley must contain the point at which the belt leaves the other pulley.

By following this law, non-parallel shafts may be connected by a flat belt. In Fig. 9.10, two shafts with two pulleys are at right angles to each other. It can be observed that the centre line of the belt approaching the larger pulley lies in its plane which is also true for the smaller pulley. Also, the points at which the belt leaves a pulley are contained in the plane of the other pulley.

It should also be observed that it is not possible to operate the belt in the reverse direction without violating the law of belting. Thus, in case of non-parallel shafts, motion is possible only in one direction. Otherwise, the belt is thrown off the pulley. However, it is possible to run a belt in either direction on the pulleys of two non-parallel or intersecting shafts with the help of guide pulleys (refer to Sec. 9.8). The law of belting is still satisfied.

Fig. 9.10

9.10 LENGTH OF BELT

1. Open Belt

Let A and B be the pulley centres and CD and EF, the common tangents to the two pulley circles (Fig. 9.11). Total length of the belt comprises

(a) the length in contact with the smaller pulley

(b) the length in contact with the larger pulley

(c) the length not in contact with either pulley

Fig. 9.11

Let L_o = length of belt for open belt drive

r = radius of smaller pulley

R = radius of larger pulley

C = Centre distance between pulleys

β = angle subtended by each common tangent (CD or EF) with AB, the line of centres of pulleys.

Draw AN parallel to CD so that $\angle BAN = \beta$ and $BN = R - r$

Each chapter has a concise and comprehensive treatment of topics with emphasis on fundamental concepts.

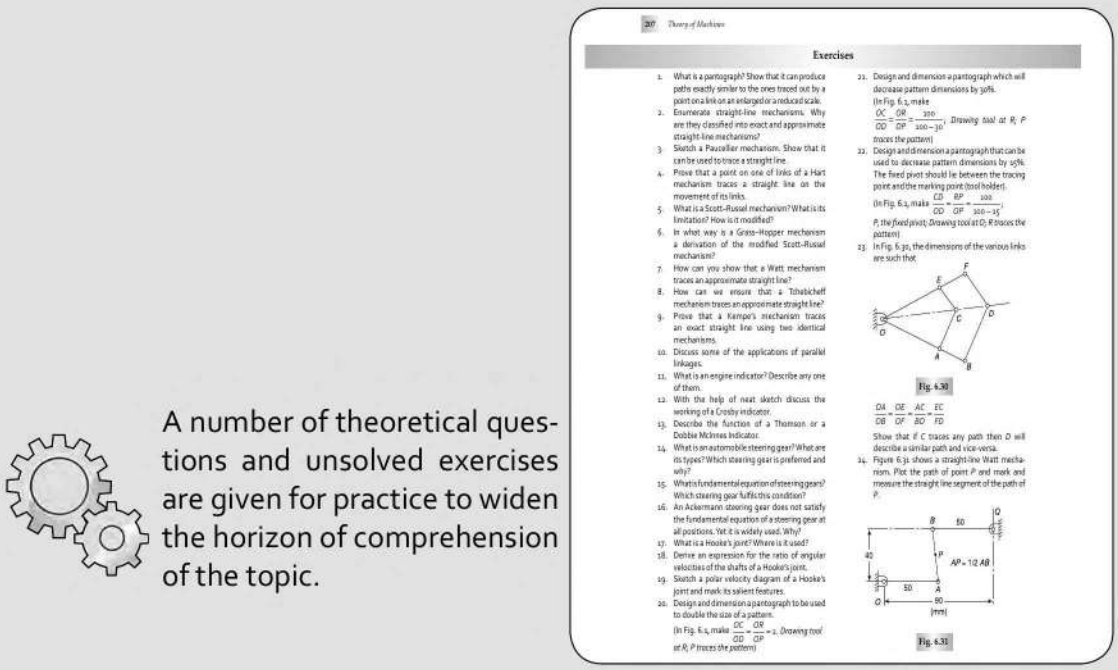

207 Theory of Machines

Exercises

1. What is a pantograph? Show that it can produce paths exactly similar to the ones traced out by a point on a link on an enlarged or a reduced scale.
2. Enumerate straight-line mechanisms. Why are they classified into exact and approximate straight-line mechanisms?
3. Sketch a Peaucellier mechanism. Show that it can be used to trace a straight line.
4. Prove that a point on one of links of a Hart mechanism traces a straight line on the movement of its links.
5. What is a Scott–Russel mechanism? What is its limitation? How is it modified?
6. In what way is a Grass-Hopper mechanism a derivation of the modified Scott–Russel mechanism?
7. How can you show that a Watt mechanism traces an approximate straight line?
8. How can we ensure that a Tchebicheff mechanism traces an approximate straight line?
9. Prove that a Kempe's mechanism traces an exact straight line using two identical mechanisms.
10. Discuss some of the applications of parallel linkages.
11. What is an engine indicator? Describe any one of them.
12. With the help of neat sketch discuss the working of a Crosby indicator.
13. Describe the function of a Thomson or a Dobbie McInnes Indicator.
14. What is an automobile steering gear? What are its types? Which steering gear is preferred and why?
15. What is fundamental equation of steering gears? Which steering gear fulfils this condition?
16. An Ackermann steering gear does not satisfy the fundamental equation of a steering gear at all positions. Yet it is widely used. Why?
17. What is a Hooke's joint? Where is it used?
18. Derive an expression for the ratio of angular velocities of the shafts of a Hooke's joint.
19. Sketch a polar velocity diagram of a Hooke's joint and mark its salient features.
20. Design and dimension a pantograph to be used to double the size of a pattern.
    (In Fig. 6.1, make $\frac{OC}{OD} = \frac{OR}{OP} = 2$. *Drawing tool at R, P traces the pattern*)
21. Design and dimension a pantograph which will decrease pattern dimensions by 30%.
    (In Fig. 6.2, make $\frac{OC}{OD} = \frac{OR}{OP} = \frac{100}{100-30}$. *Drawing tool at R, P traces the pattern*)
22. Design and dimension a pantograph that can be used to decrease pattern dimensions by 25%. The fixed pivot should lie between the tracing point and the marking point (tool holder).
    (In Fig. 6.2, make $\frac{CD}{OD} = \frac{BP}{OP} = \frac{100}{100-25}$.
    P, the fixed pivot. Drawing tool at D, R traces the pattern)
23. In Fig. 6.30, the dimensions of the various links are such that

Fig. 6.30

$$\frac{DA}{DB} = \frac{OE}{OF} = \frac{AC}{BD} = \frac{EC}{FD}$$

Show that if C traces any path then D will describe a similar path and vice-versa.

24. Figure 6.31 shows a straight-line Watt mechanism. Plot the path of point P and mark and measure the straight line segment of the path of P.

Fig. 6.31

A number of theoretical questions and unsolved exercises are given for practice to widen the horizon of comprehension of the topic.

A Summary at the end of each chapter recapitulates the inferences for quick revision.

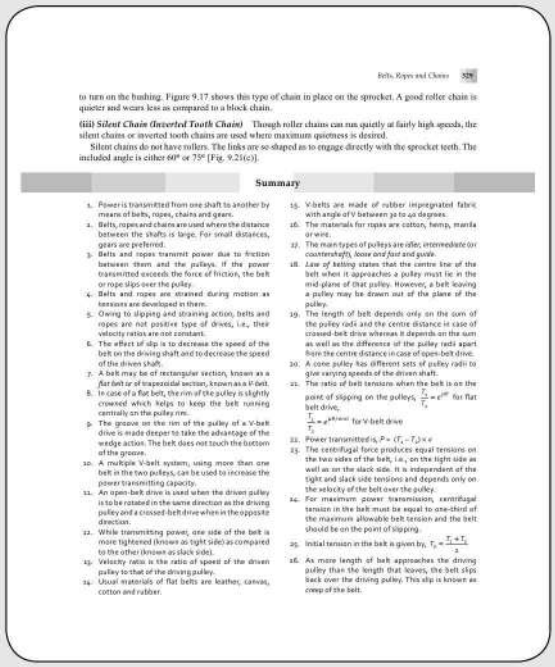

Belts, Ropes and Chains 529

to turn on the bushing. Figure 9.17 shows this type of chain in place on the sprocket. A good roller chain is quieter and wears less as compared to a block chain.

(iii) *Silent Chain (Inverted Tooth Chain)* Though roller chains can run quietly at fairly high speeds, the silent chains or inverted tooth chains are used where maximum quietness is desired.

Silent chains do not have rollers. The links are so shaped as to engage directly with the sprocket teeth. The included angle is either 60° or 75° [Fig. 9.21(c)].

Summary

1. Power is transmitted from one shaft to another by means of belts, ropes, chains and gears.
2. Belts, ropes and chains are used where the distance between the shafts is large. For small distances, gears are preferred.
3. Belts and ropes transmit power due to friction between them and the pulleys. If the power transmitted exceeds the force of friction, the belt or rope slips over the pulley.
4. Belts and ropes are strained during motion as tensions are developed in them.
5. Owing to slipping and straining action, belts and ropes are not positive type of drives, i.e., their velocity ratios are not constant.
6. The effect of slip is to decrease the speed of the belt on the driving shaft and to decrease the speed of the driven shaft.
7. A belt may be of rectangular section, known as a *flat belt* or of trapezoidal section, known as a V-belt.
8. In case of a flat belt, the rim of the pulley is slightly crowned which helps to keep the belt running centrally on the pulley rim.
9. The groove on the rim of the pulley of a V-belt drive is made deeper to take the advantage of the wedge action. The belt does not touch the bottom of the groove.
10. A multiple V-belt system, using more than one belt in the two pulleys, can be used to increase the power transmitting capacity.
11. An open-belt drive is used when the driven pulley is to be rotated in the same direction as the driving pulley and a crossed-belt drive when in the opposite direction.
12. While transmitting power, one side of the belt is more tightened (known as tight side) as compared to the other (known as slack side).
13. Velocity ratio is the ratio of speed of the driven pulley to that of the driving pulley.
14. Usual materials of flat belts are leather, canvas, cotton and rubber.
15. V-belts are made of rubber impregnated fabric with angle of V between 30 to 40 degrees.
16. The materials for ropes are cotton, hemp, manila or wire.
17. The main types of pulleys are idler, intermediate (or *countershaft*), *loose and fast* and *guide*.
18. *Law of belting* states that the centre line of the belt when it approaches a pulley must lie in the mid-plane of that pulley. However, a belt leaving a pulley may be drawn out of the plane of the pulley.
19. The length of belt depends only on the sum of the pulley radii and the centre distance in case of crossed-belt drive whereas it depends on the sum as well as the difference of the pulley radii apart from the centre distance in case of open-belt drive.
20. A cone pulley has different sets of pulley radii to give varying speeds of the driven shaft.
21. The ratio of belt tensions when the belt is on the point of slipping on the pulleys, $\frac{T_1}{T_2} = e^{\mu\theta}$ for flat belt drive,
$\frac{T_1}{T_2} = e^{\mu\theta/\sin\alpha}$ for V-belt drive
22. Power transmitted is, $P = (T_1 - T_2) \times v$
23. The centrifugal force produces equal tensions on the two sides of the belt, i.e., on the tight side as well as on the slack side. It is independent of the tight and slack side tensions and depends only on the velocity of the belt over the pulley.
24. For maximum power transmission, centrifugal tension in the belt must be equal to one-third of the maximum allowable belt tension and the belt should be on the point of slipping.
25. Initial tension in the belt is given by, $T_0 = \frac{T_1 + T_2}{2}$
26. As more length of belt approaches the driving pulley than the length that leaves, the belt slips back over the driving pulley. This slip is known as *creep* of the belt.

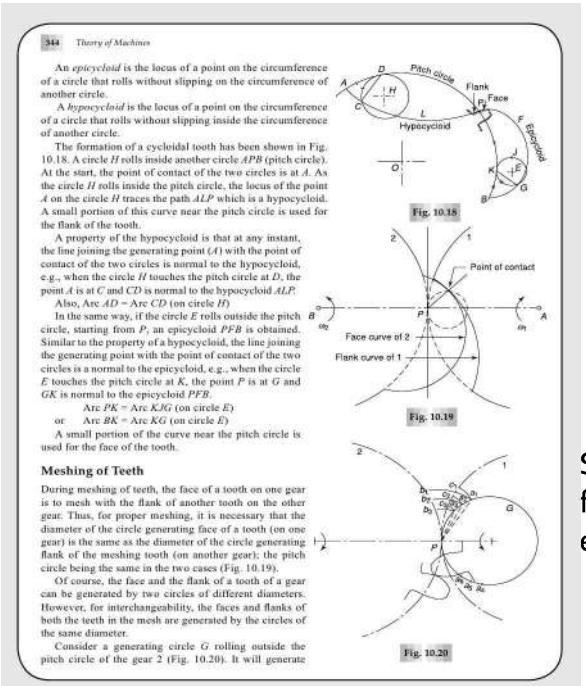

344 Theory of Machines

An *epicycloid* is the locus of a point on the circumference of a circle that rolls without slipping on the circumference of another circle.

A *hypocycloid* is the locus of a point on the circumference of a circle that rolls without slipping inside the circumference of another circle.

The formation of a cycloidal tooth has been shown in Fig. 10.18. A circle H rolls inside another circle APB (pitch circle). At the start, the point of contact of the two circles is at A. As the circle H rolls inside the pitch circle, the locus of the point A on the circle H traces the path ALP which is a hypocycloid. A small portion of this curve near the pitch circle is used for the flank of the tooth.

A property of the hypocycloid is that at any instant, the line joining the generating point (A) with the point of contact of the two circles is normal to the hypocycloid, e.g., when the circle H touches the pitch circle at D, the point A is at C and CD is normal to the hypocycloid ALP.

Also, Arc AD = Arc CD (on circle H)

In the same way, if the circle E rolls outside the pitch circle, starting from P, an epicycloid PFB is obtained. Similar to the property of a hypocycloid, the line joining the generating point with the point of contact of the two circles is a normal to the epicycloid, e.g., when the circle E touches the pitch circle at K, the point P is at G and GK is normal to the epicycloid PFB.

Arc PK = Arc KJG (on circle E)

or Arc BK = Arc KG (on circle E)

A small portion of the curve near the pitch circle is used for the face of the tooth.

Meshing of Teeth

During meshing of teeth, the face of a tooth on one gear is to mesh with the flank of another tooth on the other gear. Thus, for proper meshing, it is necessary that the diameter of the circle generating face of a tooth (on one gear) is the same as the diameter of the circle generating flank of the meshing tooth (on another gear); the pitch circle being the same in the two cases (Fig. 10.19).

Of course, the face and the flank of a tooth of a gear can be generated by two circles of different diameters. However, for interchangeability, the faces and flanks of both the teeth in the mesh are generated by the circles of the same diameter.

Consider a generating circle G rolling outside the pitch circle of the gear 2 (Fig. 10.20). It will generate

Fig. 10.18

Fig. 10.19

Fig. 10.20

Simple diagrams are given for easy visualization of the explanations.

The instantaneous centre of rotation of the link AB is at I for the given configuration of the governor. It is because the motion of its two points A and B relative to the link is known. The point A oscillates about the point O and B moves in a vertical direction parallel to the axis. Lines perpendicular to the direction of these motions locates the point I.

Considering the equilibrium of the left-hand half of the governor and taking moments about I,

$$mr\omega^2 a = mg\,c + \frac{Mg \pm f}{2}(c+b)$$

or $$mr\omega^2 = mg\frac{c}{a} + \frac{Mg \pm f}{2}\left(\frac{c}{a} + \frac{b}{a}\right)$$

$$= mg\tan\theta + \frac{Mg \pm f}{2}(\tan\theta + \tan\beta)$$

$$= \tan\theta\left[mg + \frac{Mg \pm f}{2}(1+k)\right] \qquad \left(\text{taking } k = \frac{\tan\beta}{\tan\theta}\right)$$

or $$= \frac{r}{h}\left[mg + \frac{Mg \pm f}{2}(1+k)\right]$$

or $$\omega^2 = \frac{1}{mh}\left(\frac{2mg + (Mg \pm f)(1+k)}{2}\right)$$

or $$\left(\frac{2\pi N}{60}\right)^2 = \frac{g}{h}\left(\frac{2mg + (Mg \pm f)(1+k)}{2mg}\right)$$

$$N^2 = \frac{895}{h}\left(\frac{2mg + (Mg \pm f)(1+k)}{2mg}\right)$$

(Taking $g = 9.81$ m/s^2)

A porter governor

Anumberofphotographs are given to emphasize the factual shape of various components.

An Appendix containing multiple choice questions is given at the end to help students prepare for competitive examinations.

Appendix I — OBJECTIVE-TYPE QUESTIONS

Chapter 1 Mechanisms and Machines

1.1 The lead screw of a lathe with nut is a
(a) rolling pair (b) screw pair (c) turning pair (d) sliding pair

1.2 In a kinematic pair, when the elements have surface contact while in motion, it is a
(a) higher pair (b) closed pair (c) lower pair (d) unclosed pair

1.3 In a kinematic chain, a ternary joint is equivalent to
(a) two binary joints (b) three binary joints (c) one binary joint

1.4 In a four-link mechanism, the sum of the shortest and the longest link is less than the sum of the other two links. It will act as a drag-crank mechanism if
(a) the longest link is fixed
(b) the shortest link is fixed
(c) any link adjacent to the shortest link is fixed

1.5 In a four-link mechanism, the sum of the shortest and the longest link is less than the sum of the other two links. It will act as a crank-rocker mechanism if
(a) the link opposite to the shortest link is fixed
(b) the shortest link is fixed
(c) any link adjacent to the shortest link is fixed

Appendix II — IMPORTANT RELATIONS AND RESULTS

1. For degree of freedom of mechanisms,
   - *Kutzbach's criterion,* $F = 3(N-1) - 2P_1 - 1P_2$
   - *Gruebler's criterion,* $F = 3(N-1) - 2P_1$
   - *Author's criterion,* $F = N - (2L+1)$ and $P_1 = N + (L-1)$
2. The number of Instantaneous-centres in a mechanism, $N = n(n-1)/2$
3. The angle of the output link of a four-link mechanism, $\varphi = 2\tan^{-1}\left[\dfrac{-B \pm \sqrt{B^2 - 4AC}}{2A}\right]$

   where $B = -2ac\sin\theta$, $A = k - a(d-c)\cos\theta - cd$
   and $2k = a^2 - b^2 + c^2 + d^2$, $C = k - a(d+c)\cos\theta + cd$
4. The angle of the coupler link of four-link mechanism, $\beta = 2\tan^{-1}\left[\dfrac{-E \pm \sqrt{E^2 - 4DF}}{2D}\right]$

   where $D = k^2 - ad(d+b)\cos\theta + bd$
   $E = 2ab\sin\theta$, $F = k^2 - ad(d-b)\cos\theta - bd$ and $2k^2 = a^2 + b^2 - c^2 + d^2$

An Appendix containing important relations is given for ready reference.

1 MECHANISMS AND MACHINES

Introduction

If a number of bodies are assembled in such a way that the motion of one causes constrained and predictable motion to the others, it is known as a *mechanism*. A mechanism transmits and modifies a motion. A *machine* is a mechanism or a combination of mechanisms which, apart from imparting definite motions to the parts, also transmits and modifies the available mechanical energy into some kind of desired work. Thus, a mechanism is a fundamental unit and one has to start with its study.

The study of a mechanism involves its analysis as well as synthesis. *Analysis* is the study of motions and forces concerning different parts of an existing mechanism, whereas *synthesis* involves the design of its different parts. In a mechanism, the various parts are so proportioned and related that the motion of one imparts requisite motions to the others and the parts are able to withstand the forces impressed upon them. However, the study of the relative motions of the parts does not depend on the strength and the actual shapes of the parts.

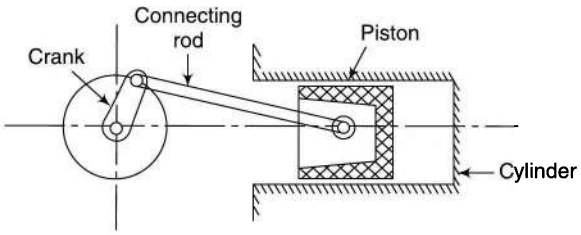

Fig. 1.1

In a reciprocating engine, the displacement of the piston depends upon the lengths of the connecting rod and the crank (Fig. 1.1). It is independent of the bearing strength of the parts or whether they are able to withstand the forces or not. Thus for the study of motions, it is immaterial if a machine part is made of mild steel, cast iron or wood. Also, it is not necessary to know the actual shape and area of the cross section of the part. Thus, for the study of motions of different parts of a mechanism, the study of forces is not necessary and can be neglected. The study of mechanisms, therefore, can be divided into the following disciplines:

Kinematics It deals with the relative motions of different parts of a mechanism without taking into consideration the forces producing the motions. Thus, it is the study, from a geometric point of view, to know the displacement, velocity and acceleration of a part of a mechanism.

Dynamics It involves the calculations of forces impressed upon different parts of a mechanism. The forces can be either static or dynamic. Dynamics is further subdivided into *kinetics* and *statics*. Kinetics is the study of forces when the body is in motion whereas statics deals with forces when the body is stationary.

1.1 MECHANISM AND MACHINE

As mentioned earlier, a combination of a number of bodies (usually rigid) assembled in such a way that the motion of one causes constrained and predictable motion to the others is known as a *mechanism*. Thus, the function of a mechanism is to transmit and modify a motion.

A *machine* is a mechanism or a combination of mechanisms which, apart from imparting definite motions to the parts, also transmits and modifies the available mechanical energy into some kind of desired work. It is neither a source of energy nor a producer of work but helps in proper utilization of the same. The motive power has to be derived from external sources.

A slider-crank mechanism (Fig. 1.2) converts the reciprocating motion of a slider into rotary motion of the crank or vice-versa. However, when it is used as an automobile engine by adding valve mechanism, etc., it becomes a machine which converts the available energy (force on the piston) into the desired energy (torque of the crank-shaft). The torque is used to move a vehicle. Reciprocating pumps, reciprocating compressors and steam engines are other examples of machines derived from the slider-crank mechanism.

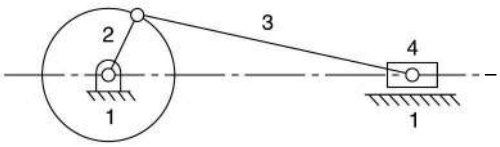

Fig. 1.2

Some other examples of mechanisms are typewriters, clocks, watches, spring toys, etc. In each of these, the force or energy provided is not more than what is required to overcome the friction of the parts and which is utilized just to get the desired motion of the mechanism and not to obtain any useful work.

1.2 TYPES OF CONSTRAINED MOTION

There are three types of constrained motion:

(i) ***Completely constrained motion*** When the motion between two elements of a pair is in a definite direction irrespective of the direction of the force applied, it is known as completely constrained motion. The constrained motion may be linear or rotary. The sliding pair of Fig. 1.3(a) and the turning pair of Fig. 1.3(b) are the examples of the completely constrained motion. In sliding pair, the inner prism can only slide inside the hollow prism. In case of a turning pair, the inner shaft can have only rotary motion due to collars at the ends. In each case the force has to be applied in a particular direction for the required motion.

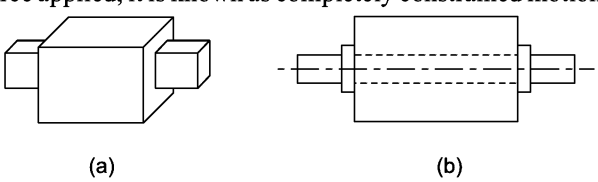

Fig. 1.3

(ii) ***Incompletely constrained motion*** When the motion between two elements of a pair is possible in more than one direction and depends upon the direction of the force applied, it is known as incompletely constrained motion. For example, if the turning pair of Fig. 1.4 does not have collars, the inner shaft may have sliding or rotary motion depending upon the direction of the force applied. Each motion is independent of the other.

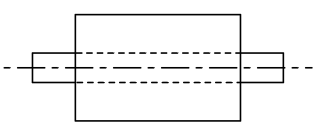

Fig. 1.4

(iii) ***Successfully constrained motion*** When the motion between two elements of a pair is possible in more than one direction but is made to have motion only in one direction by using some external means, it is a successfully constrained motion. For example, a shaft in a footstep bearing may have vertical motion apart from rotary motion (Fig. 1.5). But due to load applied on the shaft it is constrained to move in

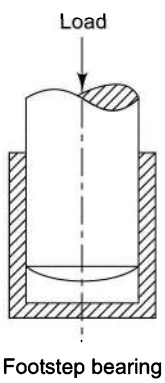

Fig. 1.5

that direction and thus is a successfully constrained motion. Similarly, a piston in a cylinder of an internal combustion engine is made to have only reciprocating motion and no rotary motion due to constrain of the piston pin. Also, the valve of an IC engine is kept on the seat by the force of a spring and thus has successfully constrained motion.

1.3 RIGID AND RESISTANT BODIES

A body is said to be *rigid* if under the action of forces, it does not suffer any distortion or the distance between any two points on it remains constant.

Resistant bodies are those which are rigid for the purposes they have to serve. Apart from rigid bodies, there are some semi-rigid bodies which are normally flexible, but under certain loading conditions act as rigid bodies for the limited purpose and thus are resistant bodies. A belt is rigid when subjected to tensile forces. Therefore, the belt-drive acts as a resistant body. Similarly, fluids can also act as resistant bodies when compressed as in case of a hydraulic press. For some purposes, springs are also resistant bodies.

These days, resistant bodies are usually referred as rigid bodies.

1.4 LINK

A mechanism is made of a number of resistant bodies out of which some may have motions relative to the others. A resistant body or a group of resistant bodies with rigid connections preventing their relative movement is known as a *link*. A link may also be defined as a member or a combination of members of a mechanism, connecting other members and having motion relative to them. Thus, a link may consist of one or more resistant bodies. A slider-crank mechanism consists of four links: frame and guides, crank, connecting-rod and slider. However, the frame may consist of bearings for the crankshaft. The crank link may have a crankshaft and flywheel also, forming one link having no relative motion of these.

A link is also known as *kinematic link* or *element*.

Links can be classified into *binary, ternary* and *quaternary* depending upon their ends on which revolute or turning pairs (Sec. 1.5) can be placed. The links shown in Fig. 1.6 are rigid links and there is no relative motion between the joints within the link.

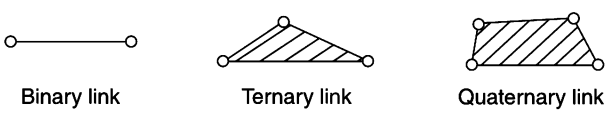

Fig. 1.6

1.5 KINEMATIC PAIR

A kinematic pair or simply a pair is a joint of two links having relative motion between them. In a slider-crank mechanism (Fig. 1.2), the link 2 rotates relative to the link 1 and constitutes a revolute or turning pair. Similarly, links 2, 3 and 3, 4 constitute turning pairs. Link 4 (slider) reciprocates relative to the link 1 and is a sliding pair.

Types of Kinematic Pairs Kinematic pairs can be classified according to

- nature of contact
- nature of mechanical constraint
- nature of relative motion

Kinematic Pairs according to Nature of Contact

(a) Lower Pair A pair of links having surface or area contact between the members is known as a lower pair. The contact surfaces of the two links are similar.

Examples Nut turning on a screw, shaft rotating in a bearing, all pairs of a slider-crank mechanism, universal joint, etc.

(b) Higher Pair When a pair has a point or line contact between the links, it is known as a higher pair. The contact surfaces of the two links are dissimilar.

Examples Wheel rolling on a surface, cam and follower pair, tooth gears, ball and roller bearings, etc.

Kinematic Pairs according to Nature of Mechanical Constraint

(a) Closed Pair When the elements of a pair are held together mechanically, it is known as a closed pair. The two elements are geometrically identical; one is solid and full and the other is hollow or open. The latter not only envelops the former but also encloses it. The contact between the two can be broken only by destruction of at least one of the members.

All the lower pairs and some of the higher pairs are closed pairs. A cam and follower pair (higher pair) shown in Fig. 1.7(a) and a screw pair (lower pair) belong to the closed pair category.

(b) Unclosed Pair When two links of a pair are in contact either due to force of gravity or some spring action, they constitute an unclosed pair. In this, the links are not held together mechanically, e.g., cam and follower pair of Fig. 1.7(b).

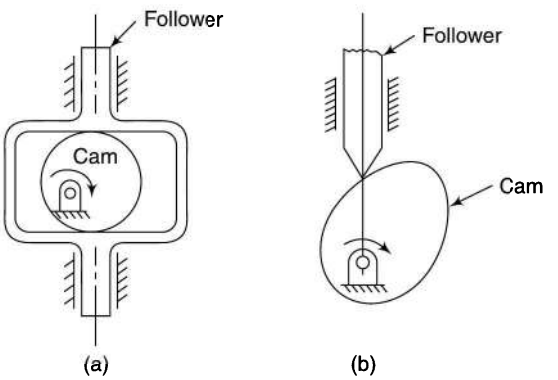

Fig. 1.7

Kinematic Pairs according to Nature of Relative Motion

(a) Sliding Pair If two links have a sliding motion relative to each other, they form a sliding pair.

A rectangular rod in a rectangular hole in a prism is a sliding pair [Fig. 1.8(a)].

(b) Turning Pair When one link has a turning or revolving motion relative to the other, they constitute a turning or revolving pair [Fig. 1.8(b)].

In a slider-crank mechanism, all pairs except the slider and guide pair are turning pairs. A circular shaft revolving inside a bearing is a turning pair.

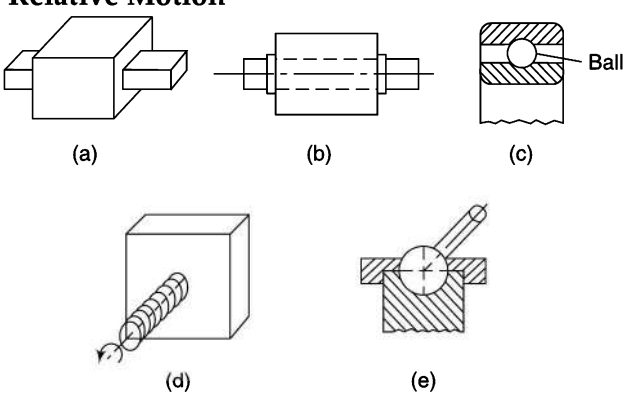

Fig. 1.8

(c) Rolling Pair When the links of a pair have a rolling motion relative to each other, they form a rolling pair, e.g., a rolling wheel on a flat surface, ball and roller bearings, etc. In a ball bearing [Fig. 1.8(c)], the ball and the shaft constitute one rolling pair whereas the ball and the bearing is the second rolling pair.

(d) Screw Pair (Helical Pair) If two mating links have a turning as well as sliding motion between them, they from a screw pair. This is achieved by cutting matching threads on the two links.

The lead screw and the nut of a lathe is a screw pair [Fig. 1.8(d)].

(e) Spherical Pair When one link in the form of a sphere turns inside a fixed link, it is a spherical pair.

The ball and socket joint is a spherical pair [Fig. 1.8(e)].

1.6 TYPES OF JOINTS

The usual types of joints in a chain are

- Binary joint
- Ternary joint
- Quaternary joint

Binary Joint If two links are joined at the same connection, it is called a binary joint. For example, Fig. 1.9 shows a chain with two binary joints named *B*.

Ternary Joint If three links are joined at a connection, it is known as a ternary joint. It is considered equivalent to two binary joints since fixing of any one link constitutes two binary joints with each of the other two links. In Fig. 1.9 ternary links are mentioned as *T*.

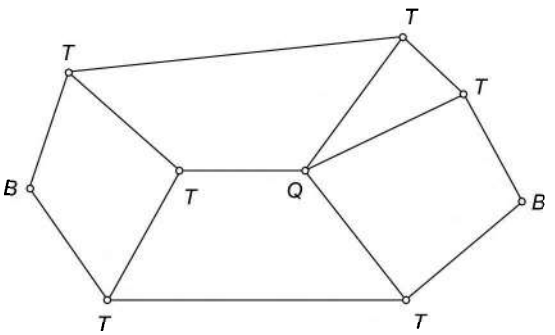

Fig. 1.9

Quaternary Joint If four links are joined at a connection, it is known as a quaternary joint. It is considered equivalent to three binary joints since fixing of any one link constitutes three binary joints. Figure 1.9 shows one quaternary joint.

In general, if n number of links are connected at a joint, it is equivalent to $(n - 1)$ binary joints.

1.7 DEGREES OF FREEDOM

An unconstrained rigid body moving in space can describe the following independent motions (Fig. 1.10):

1. Translational motions along any three mutually perpendicular axes x, y and z
2. Rotational motions about these axes

Thus, a rigid body possesses six degrees of freedom. The connection of a link with another imposes certain constraints on their relative motion. The number of restraints can never be zero (joint is disconnected) or six (joint becomes solid).

Degrees of freedom of a pair is defined as the number of independent relative motions, both translational and rotational, a pair can have.

Degrees of freedom = 6 – Number of restraints

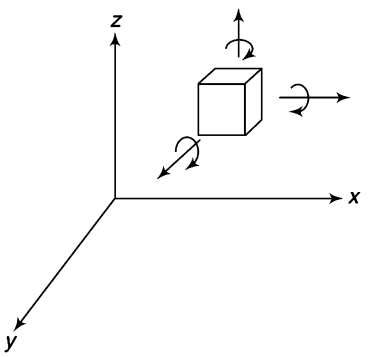

Fig. 1.10

1.8 CLASSIFICATION OF KINEMATIC PAIRS

Depending upon the number of restraints imposed on the relative motion of the two links connected together, a pair can be classified as given in Table 1.1 which gives the possible form of each class.

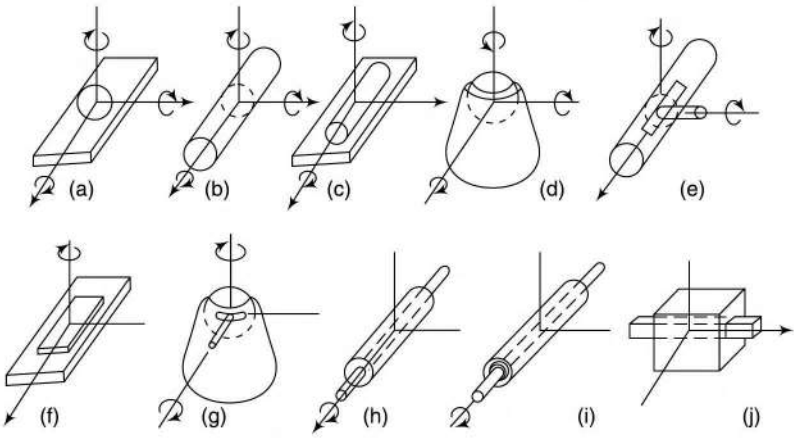

Fig. 1.11

Different forms of each class have also been shown in Fig. 1.11. Remember that a particular relative motion between two links of a pair must be independent of the other relative motions that the pair can have. A screw and nut pair permits translational and rotational motions. However, as the two motions cannot be accomplished independently, a screw and nut pair is a kinematic pair of the fifth class and not of the fourth class.

1.9 KINEMATIC CHAIN

A *kinematic chain* is an assembly of links in which the relative motions of the links is possible and the motion of each relative to the other is definite [Fig.1.12 (a), (b), and (c)].

Table 1.1

Class	Number of Restraints	Form	Restraints on		Kinematic pair	Fig. 1.11
			Translatory motion	Rotary motion		
I	1	1st	1	0	Sphere-plane	a
II	2	1st	2	0	Sphere-cylinder	b
		2nd	1	1	Cylinder-plane	c
III	3	1st	3	0	Spheric	d
		2nd	2	1	Sphere-slotted cylinder	e
		3rd	1	2	Prism-plane	f
IV	4	1st	3	1	Slotted-spheric	g
		2nd	2	2	Cylinder	h
V	5	1st	3	2	Cylinder (collared)	i
		2nd	2	3	Prismatic	j

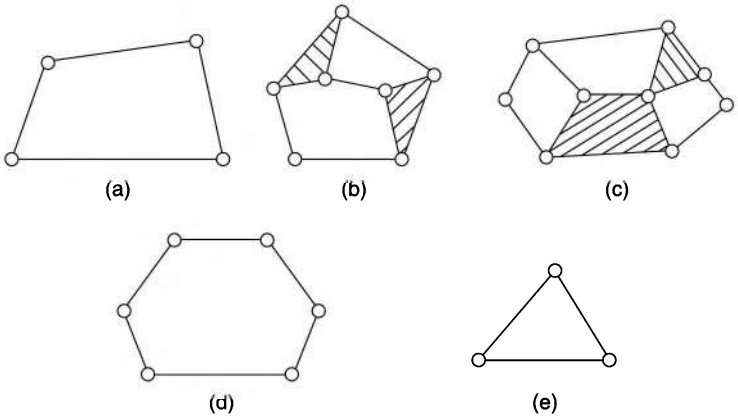

Fig. 1.12

In case the motion of a link results in indefinite motions of other links, it is a *non-kinematic chain* [Fig. 1.12(d)]. However, some authors prefer to call all chains having relative motions of the links as kinematic chains.

A *redundant chain* does not allow any motion of a link relative to the other [Fig. 1.12(e)].

1.10 LINKAGE, MECHANISM AND STRUCTURE

A *linkage* is obtained if one of the links of a kinematic chain is fixed to the ground. If motion of any of the moveable links results in definite motions of the others, the linkage is known as a *mechanism*. However, this distinction between a mechanism and a linkage is hardly followed and each can be referred in place of the other.

If one of the links of a redundant chain is fixed, it is known as a *structure* or *a locked system*. To obtain constrained or definite motions of some of the links of a linkage (or mechanism), it is necessary to know how many inputs are needed. In some mechanisms, only one input is necessary that determines the motions of other links and it is said to have one degree of freedom. In other mechanisms, two inputs may be necessary to get constrained motions of the other links and they are said to have two degrees of freedom, and so on.

The degree of freedom of a structure or a locked system is zero. A structure with negative degree of freedom is known as a *superstructure*.

1.11 MOBILITY OF MECHANISMS

A mechanism may consist of a number of pairs belonging to different classes having different number of restraints. It is also possible that some of the restraints imposed on the individual links are common or general to all the links of the mechanism. According to the number of these general or common restraints, a mechanism may be classified into a different order. A zero-order mechanism will have no such general restrain. Of course, some of the pairs may have individual restraints. A first-order mechanism has one general restraint; a second-order mechanism has two general restraints, and so on, up to the fifth order. A sixth-order mechanism cannot exist since all the links become stationary and no movement is possible.

Expressing the number of degrees of freedom of a linkage in terms of the number of links and the number of pair connections of different types is known as *number synthesis*. *Degrees of freedom* of a mechanism in space can be determined as follows:

Let

N = total number of links in a mechanism

F = degrees of freedom

P_1 = number of pairs having one degree of freedom

P_2 = number of pairs having two degrees of freedom, and so on

In a mechanism, one link is fixed.

Therefore,

Number of movable links = $N - 1$

Number of degrees of freedom of $(N - 1)$ movable links = $6(N - 1)$

Each pair having one degree of freedom imposes 5 restraints on the mechanism, reducing its degrees of freedom by $5P_1$.

Each pair having two degrees of freedom will impose 4 restraints, reducing the degrees of freedom of the mechanism by $4P_2$.

Similarly, other pairs having 3, 4 and 5 degrees of freedom reduce the degrees of freedom of the mechanism. Thus,

$$F = 6(N - 1) - 5P_1 - 4P_2 - 3P_3 - 2P_4 - P_5 \tag{1.1}$$

The above criterion is hardly necessary to find the degrees of freedom, as space mechanisms, especially of the zero order are not practical. Most of the mechanisms are two-dimensional such as a four-link or a slider-crank mechanism in which displacement is possible along two axes (one restraint) and rotation about only one axis (two restraints). Thus, there are three general restraints.

Therefore, for plane mechanisms, the following relation may be used to find the degrees of freedom

$$F = 3(N - 1) - 2P_1 - 1P_2 \tag{1.2}$$

This is known as *Gruebler's criterion* for degrees of freedom of plane mechanisms in which each movable link possesses three degrees of freedom. Each pair with one degree of freedom imposes two further restraints on the mechanisms, thus reducing its degrees of freedom. Similarly, each pair with two degrees of freedom reduces the degrees of freedom of the mechanism at the rate of one restraint each.

Some authors mention the above relation as *Kutzback's criterion* and a simplified relation $[F = 3\,(N–1) - 2P_1]$ which is applicable to linkages with a single degree of freedom only as Gruebler's criterion. However, many authors make no distinction between Kutzback's criterion and Gruebler's criterion.

Thus, for linkages with a single degree of freedom only, $P_2 = 0$

$$F = 3(N - 1) - 2P_1 \tag{1.3}$$

Most of the linkages are expected to have one degree of freedom so that with one input to any of the links, a constrained motion of the others is obtained.

Then,

$$1 = 3(N - 1) - 2P_1$$

or

$$2P_1 = 3N - 4 \tag{1.4}$$

As P_1 and N are to be whole numbers, the relation can be satisfied only if N is even. For possible linkages made of binary links only,

$N = 4$,	$P_1 = 4$	No excess turning pair
$N = 6$,	$P_1 = 7$	One excess turning pair
$N = 8$,	$P_1 = 10$	Two excess turning pairs

and so on.

Thus, with the increase in the number of links, the number of excess turning pairs goes on increasing. Getting the required number of turning pairs from the required number of binary links is not possible. Therefore, the excess or the additional pairs or joints can be obtained only from the links having more than two joining points, i.e., ternary or quaternary links, etc.

For a six-link chain, some of the possible types are Watts six-bar chain, in which the ternary links are directly connected [Fig. 1.13(a)] and Stephenson's six-bar chain, in which ternary links are not directly connected [Fig. 1.13(b)]. Another possibility is also shown in Fig. 1.13(c). However, this chain is not a six-link chain but a four-link chain as links 1, 2 and 3 are, in fact, one link only with no relative motion of these links.

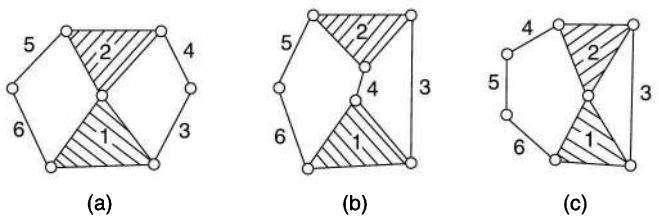

Fig. 1.13

Two excess turning pairs required for an eight-link chain can be obtained by using (apart from binary links):

four ternary links [Figs 1.14(a) and (b)]

two quaternary links [Fig.1.14(c)]

one quaternary and two ternary links [Fig. 1.14(d)].

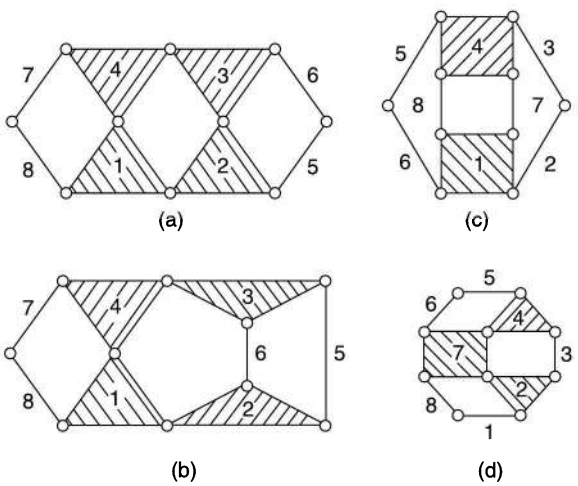

Fig. 1.14

Now, consider the kinematic chain shown in Fig. 1.15. It has 8 links, but only three ternary links. However, the links 6, 7 and 8 constitute a double pair so that the total number of pairs is again 10. The degree of freedom of such a linkage will be

$$F = 3\,(8 - 1) - 2 \times 10$$
$$= 1$$

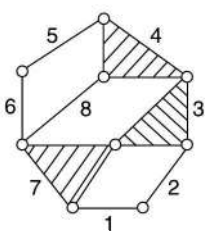

Fig. 1.15

This shows that the number of ternary or quaternary links in a chain can be reduced by providing double joints also.

The following empirical relations formulated by the author provide the degree of freedom and the number of joints in a linkage when the number of links and the number of loops in a kinematic chain are known. These relations are valid for linkages with turning pairs,

$$F = N - (2L + 1) \tag{1.5}$$

$$P_1 = N + (L - 1) \tag{1.6}$$

where

L = number of loops in a linkage.

Thus, for different number of loops in a linkage, the degrees of freedom and the number of pairs are as shown in Table 1.2.

Table 1.2

L	F	P_1
1	$N-3$	N
2	$N-5$	$N+1$
3	$N-7$	$N+2$
4	$N-9$	$N+3$
5	$N-11$	$N+4$
and so on		

For example, if in a linkage, there are 4 loops and 11 links, its degree of freedom will be 2 and the number of joints, 14. Similarly, if a linkage has 3 loops, it will require 8 links to have one degree of freedom, 9 links to have 2 degrees of freedom, 7 links to have –1 degree of freedom, etc.

Sometimes, all the above empirical relations can give incorrect results, e.g., Fig.1.16(a) has 5 links, 6 turning pairs and 2 loops. Thus, it is a structure with zero degree of freedom. However, if the links are arranged in such a way as shown in Fig. 1.16(b), a *double parallelogram linkage* with one degree of freedom is obtained. This is due to the reason that the lengths of the links or other dimensional properties are not considered in these empirical relations. So, exceptions are bound to come with equal lengths or parallel links.

Sometimes, a system may have one or more links which do not introduce any extra constraint. Such links are known as *redundant links* and should not be counted to find the degree of freedom. For example, the mechanism of Fig. 1.16(b) has 5 links, but the function of the mechanism is not affected even if any one of the links 2, 4 or 5 are removed. Thus, the effective number of links in this case is 4 with 4 turning pairs, and thus has one degree of freedom.

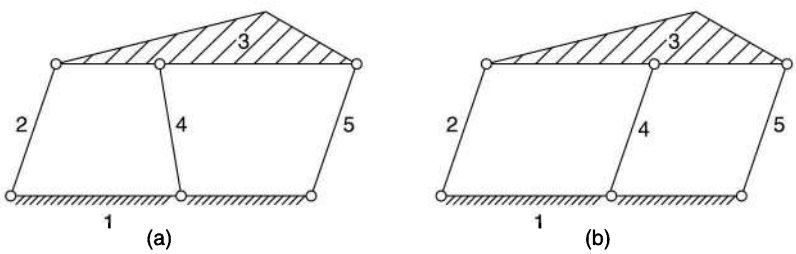

Fig. 1.16

Sometimes, one or more links of a mechanism can be moved without causing any motion to the rest of the links of the mechanism. Such a link is said to have a *redundant degree of freedom.* Thus in a mechanism, it is necessary to recognize such links prior to investigate the degree of freedom of the whole mechanism. For example, in the mechanism shown in Fig. 1.17, roller 3 can rotate about its axis without causing any movement to the rest of the mechanism. Thus, the mechanism represents a redundant degree of freedom.

In case of a mechanism possessing some redundant degree of freedom, the effective degree of freedom is given by

$$F = 3\,(N-1) - 2P_1 - 1P_2 - F_r$$

where F_r is the number of redundant degrees of freedom. Now, as the above mechanism has a cam pair, its degree of freedom must be found from Gruebler's criterion.

Total number of links = 4

Number of pairs with 1 degree of freedom = 3

Number of pairs with 2 degrees of freedom = 1

$$\begin{aligned} F &= 3\,(N-1) - 2P_1 - 1P_2 - F_r \\ &= 3\,(4-1) - 2\times 3 - 1\times 1 - 1 \\ &= 1 \end{aligned}$$

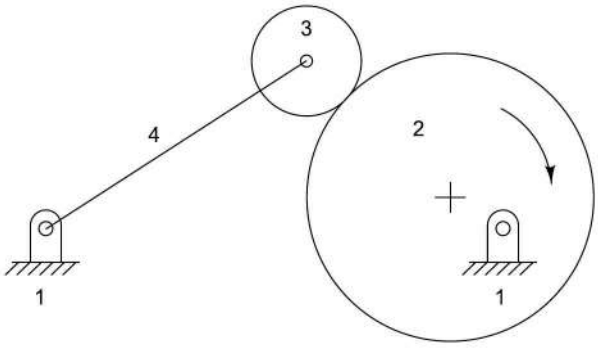

Fig. 1.17

Example 1.1 *For the kinematic linkages shown in Fig. 1.18, calculate the following:*

- *the number of binary links (N_b)*
- *the number of ternary links (N_t)*
- *the number of other (quaternary, etc.) links (N_o)*
- *the number of total links (N)*
- *the number of loops (L)*
- *the number of joints or pairs (P_1)*
- *the number of degrees of freedom (F)*

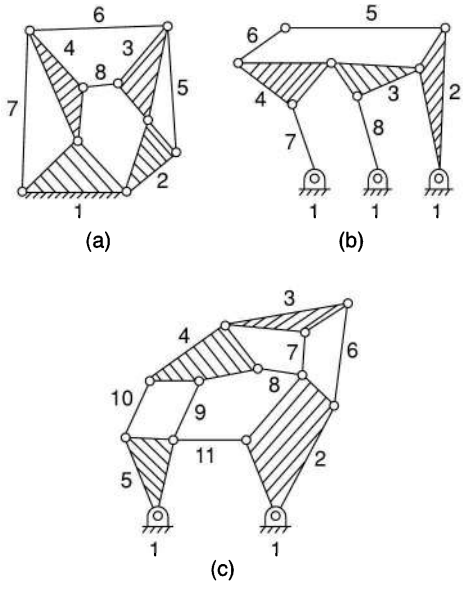

Fig. 1.18

Solution

(a) $N_b = 4;\ N_t = 4;\ N_o = 0;\ N = 8;\ L = 4$

P_1 = 11 by counting

or $P_1 = (N + L - 1) = 11$

$F = 3(N-1) - 2P_1$

$= 3\,(8-1) - 2\times 11 = -1$

or $F = N - (2L + 1)$

$= 8 - (2\times 4 + 1) = -1$

The linkage has negative degree of freedom and thus is a superstructure.

(b) $N_b = 4;\ N_t = 4;\ N_o = 0\ ;\ N = 8\ ;\ L = 3$

$P_1 = 10$ (by counting)

or $P_1 = (N + L - 1) = 10$

$F = N - (2L + 1) = 8 - (2\times 3 + 1) = 1$

or $F = 3(N-1) - 2P_1$

$= 3(8-1) - 2\times 10 = 1$

i.e., the linkage has a constrained motion when one of the seven moving links is driven by an external source.

(c) $N_b = 7\ ;\ N_t = 2\ ;\ N_o = 2\ ;\ N = 11$

$L = 5\ ;\ P_1 = 15$

$F = N - (2L + 1) = 11 - (2\times 5 + 1) = 0$

Therefore, the linkage is a structure.

Example 1.2 *State whether the linkages shown in Fig. 1.19 are mechanisms with one degree of freedom. If not, make suitable changes. The number of links should not be varied by more than 1.*

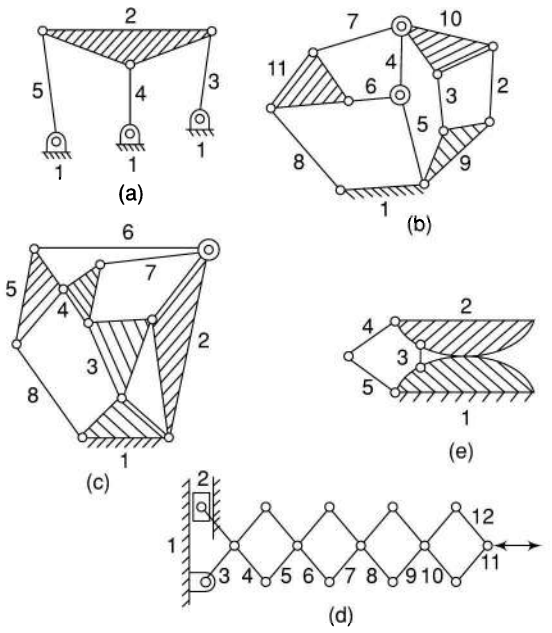

Fig. 1.19

Solution (a) The linkage has 2 loops and 5 links.

$F = N - (2L + 1) = 5 - (2 \times 2 + 1) = 0$

Thus, it is a structure. Referring Table 1.2, for a 2-loop mechanism, n should be six to have one degree of freedom. Thus, one more link should be added to the linkage to make it a mechanism of $F = 1$. One of the possible solutions has been shown in Fig. 1.20(a).

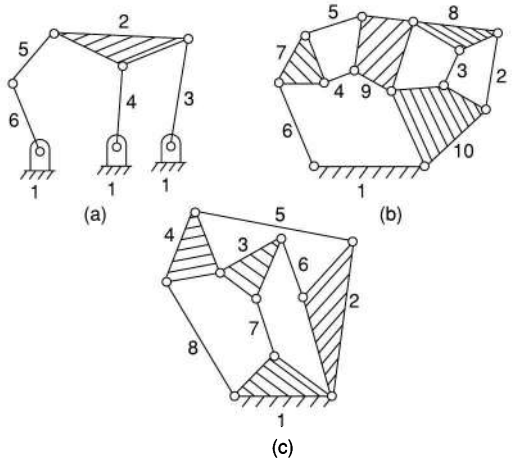

Fig. 1.20

(b) The linkage has 4 loops and 11 links. Referring Table 1.2, it has 2 degrees of freedom. With 4 loops and 1 degree of freedom, the number of links should be 10 and the number of joints 13. Three excess joints can be formed by

6 ternary links or
4 ternary links and 1 quaternary link or
2 ternary links, and 2 quaternary links, or
3 quaternary links, or
a combination of ternary and quaternary links with double joints.

Figure 1.20(b) shows one of the possible solutions.

(c) There are 4 loops and 8 links.

$F = N - (2L +) = 8 - (4 \times 2 + 1) = -1$

It is a superstructure. With 4 loops, the number of links must be 10 to obtain one degree of freedom. As the number of links is not to be increased by more than one, the number of loops has to be decreased. With 3 loops, 8 links and 10 joints, the required linkage can be designed. One of the many solutions is shown in Fig. 1.20(c).

(d) It has 5 loops and 12 links. Referring Table 1.2, it has 1 degree of freedom and thus is a mechanism.

(e) The mechanism has a cam pair, therefore, its degree of freedom must be found from Gruebler's criterion.

Total number of links = 5

Number of pairs with 1 degree of freedom = 5

Number of pairs with 2 degrees of freedom = 1

$F = 3\,(N - 1) - 2P_1 - P_2$

$= 3(5 - 1) - 2 \times 5 - 1 = 1$

Thus, it is a mechanism with one degree of freedom.

Example 1.3 *Determine the degree of freedom of the mechanisms shown in Fig. 1.21.*

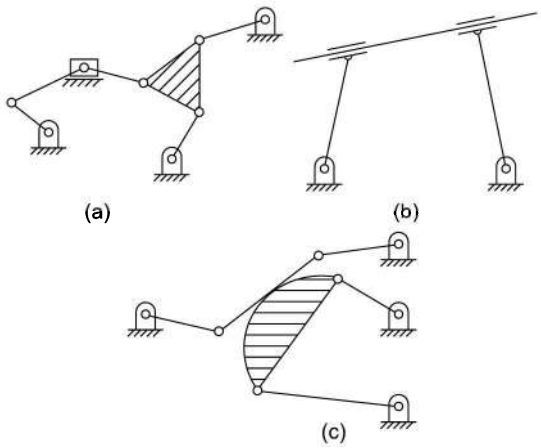

Fig. 1.21

Solution

(a) The mechanism has a sliding pair. Therefore, its degree of freedom must be found from Gruebler's criterion.
Total number of links = 8 (Fig. 1.22)
Number of pairs with 1 degree of freedom = 10
(At the slider, one sliding pair and two turning pairs)
$F = 3\,(N-1) - 2P_1 - P_2$
$= 3(8-1) - 2 \times 10 - 0 = 1$
Thus, it is a mechanism with a single degree of freedom.

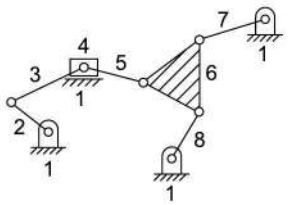

Fig. 1.22

(b) The system has a redundant degree of freedom as the rod of the mechanism can slide without causing any movement in the rest of the mechanism.
$\therefore$ effective degree of freedom
$= 3\,(N-1) - 2P_1 - P_2 - F_r$
$= 3(4-1) - 2 \times 4 - 0 - 1 = 0$
As the effective degree of freedom is zero, it is a locked system.

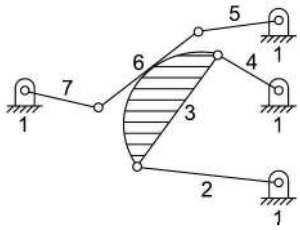

Fig. 1.23

(c) The mechanism has a cam pair. Therefore, its degree of freedom must be found from Gruebler's criterion.
Total number of links = 7 (Fig. 1.23)
Number of pairs with 1 degree of freedom = 8
Number of pairs with 2 degrees of freedom = 1
$F = 3\,(N-1) - 2P_1 - P_2$
$= 3(7-1) - 2 \times 8 - 1 = 1$
Thus, it is a mechanism with one degree of freedom.

Example 1.4 *How many unique mechanisms can be obtained from the 8-link kinematic chain shown in Fig. 1.24?*

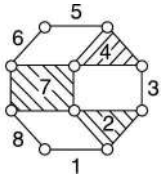

Fig. 1.24

Solution The kinematic chain has 8 links in all. A unique mechanism is obtained by fixing one of the links to the ground each time and retaining only one out of the symmetric mechanisms thus obtained.

The given kinematic chain is symmetric about links 3 or 7. Thus, identical inversions (mechanisms) are obtained if the links 2, 1, 8 or 4, 5, 6 are fixed. In addition, two more unique mechanisms can be obtained from the 8-link kinematic chain as shown in Fig. 1.25.

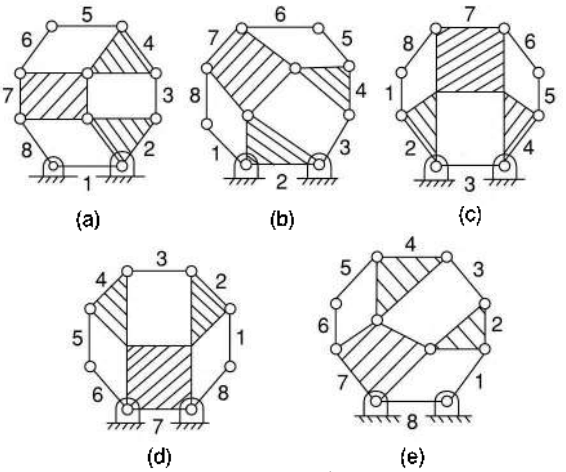

Fig. 1.25

Example 1.5 *A linkage has 11 links and 4 loops. Calculate its degree of freedom and the number of ternary and quaternary links it will have if it has only single turning pairs.*

Solution $F = N - (2L + 1) = 11 - (2 \times 4 + 1) = 2$

$P_1 = N + (L - 1) = 11 + (4 - 1) = 14$

The linkage has 3 excess joints and if all the joints are single turning pairs, the excess joints can be provided either by

- 6 ternary links or
- 4 ternary links and one quaternary link or
- 2 ternary links and two quaternary links or
- 3 quaternary links

1.12 EQUIVALENT MECHANISMS

It is possible to replace turning pairs of plane mechanisms by other types of pairs having one or two degrees of freedom, such as sliding pairs or cam pairs. This can be done according to some set rules so that the new mechanisms also have the same degrees of freedom and are kinematically similar.

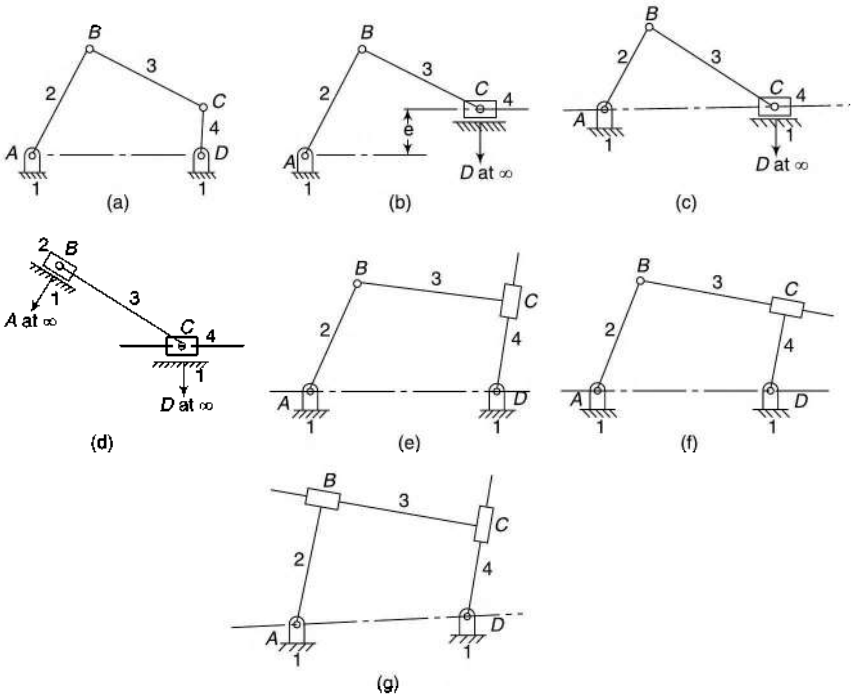

Fig. 1.26

1. Sliding Pairs in Place of Turning Pairs

Figure 1.26(a) shows a four-link mechanism. Let the length of the link 4 be increased to infinity so that D lies at infinity. Now, with the rotation of the link 2, C will have a linear motion perpendicular to the axis of the link 4. The same motion of C can be obtained if the link 4 is replaced by a slider, and guides are provided for its motion as shown in Fig. 1.26(b). In this case, the axis of the slider does not pass through A and there is an eccentricity. Figure 1.26(c) shows a slider-crank mechanism with no eccentricity. In this way, a binary link is replaced by a slider pair.

Note that the axis of the sliding pair must be in the plane of the linkage or parallel to it.

Similarly, the turning pair at A can also be replaced by a sliding pair by providing a slider with guides at B [Fig. 1.26(d)].

In case the axes of the two sliding pairs are in one line or parallel, the two sliders along with the link 3 act as one link with no relative motion among these links. Then the arrangement ceases to be a linkage. Thus, in order to replace two turning pairs in a linkage with sliding pairs, the axes of the sliding pairs must intersect.

In the same way, the turning pairs at B and C can be replaced by sliding pairs by fixing a slider to any of the two links forming the pair [Figs 1.26(e) and (f)]. Figure 1.26(g) shows both of the turning pairs at B and C replaced by sliding pairs.

2. Spring in Place of Turning Pairs

The action of a spring is to elongate or to shorten as it becomes in tension or in compression. A similar variation in length is accomplished by two binary links joined by a turning pair. In Fig. 1.27(a), the length AB varies as OB is moved away or towards point A. Figure 1.27(b) shows a 6-link mechanism in which links 4 and 5 have been shown replaced by a spring.

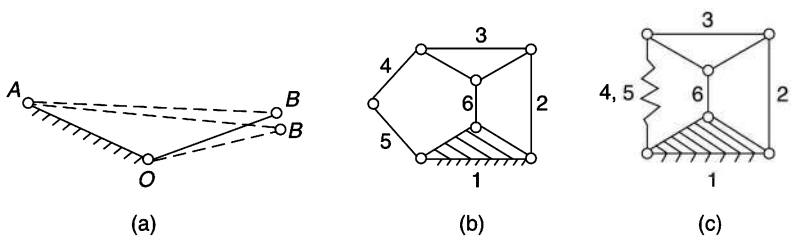

Fig. 1.27

Remember that the spring is not a rigid link but is simulating the action of two binary links joined by a turning pair. Therefore, to find the degree of freedom of such a mechanism, the spring has to be replaced by the binary links.

3. Cam Pair in Place of Turning Pair

A cam pair has two degrees of freedom. For linkages with one degree of freedom, application of Gruebler's equation yields,

$$F = 3(N-1) - 2P_1 - 1P_2$$

or $$1 = 3N - 3 - 2P_1 - 1 \times 1$$

or $$P_1 = \frac{3N-5}{2}$$

This shows that to have one cam pair in a mechanism with one degree of freedom, the number of links and turning pairs should be as below:

$N = 3, \quad P_1 = 2$
$N = 5, \quad P_1 = 5$
$N = 7, \quad P_1 = 8$
$N = 9, \quad P_1 = 11$ and so on.

A comparison of this with linkages having turning pairs only (Table 1.2) indicates that a cam pair can be replaced by one binary link with two turning pairs at each end.

Figure 1.28(a) shows link *CD* (of a four-link mechanism) with two turning pairs at its ends replaced by a cam pair. The centres of curvatures at the point of contact *X* of the two cams lie at *D* and *C*. Figures 1.28(b) and (c) show the link *BC* with turning pairs at *B* and *C* replaced by a cam pair. The centres of curvature at the point of contact *X* lie at *B* and *C* respectively. Figure 1.28(d) shows equivalent mechanism for a disc cam with reciprocating curved-face follower. The centres of curvature of the cam and the follower at the instant lie at *A* and *B* respectively.

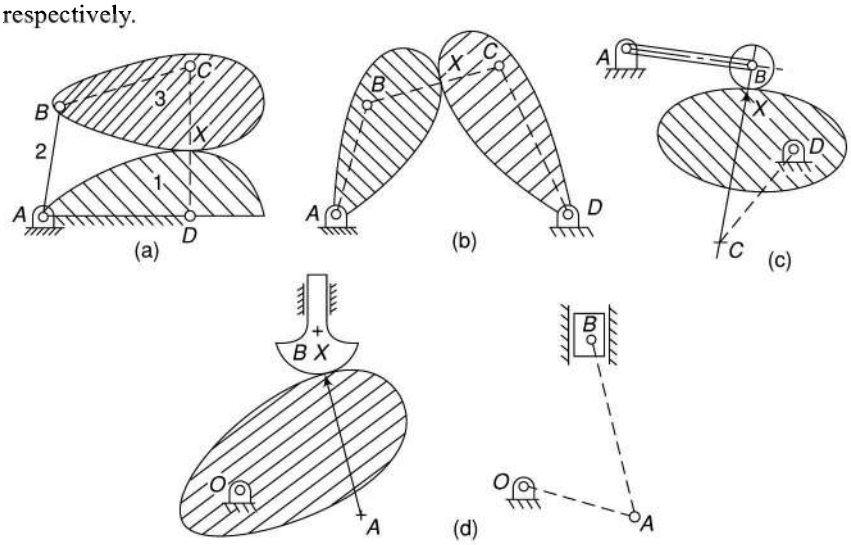

Fig. 1.28

Example 1.6 *Sketch a few slider-crank mechanisms derived from Stephenson's and Watt's six-bar chains.*

Solution Figure 1.29(a) shows a Stephenson's chain in which the ternary links are not directly connected. Thus, any of the binary links 3 or 6 can be replaced by a slider to obtain a slider-crank mechanism as shown in Fig. 1.29(b) and (c).

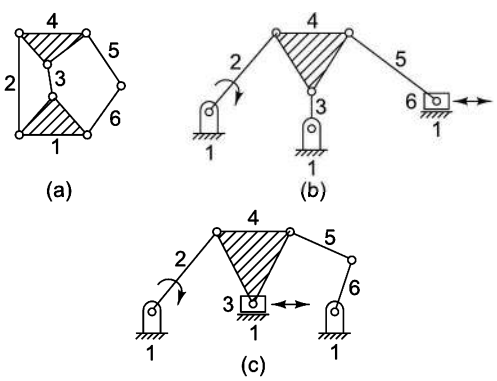

Fig. 1.29

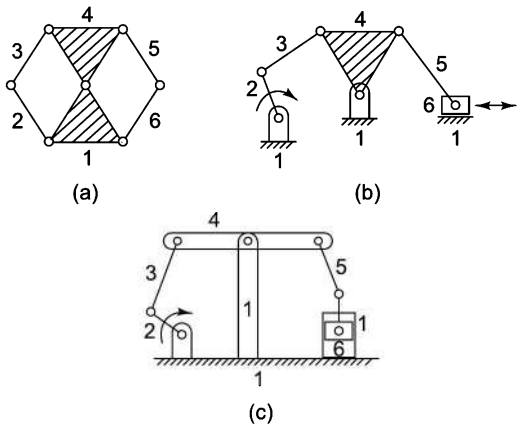

Fig. 1.30

Figure 1.30(a) shows a Watt's chain in which the ternary links are directly connected. Thus, any of the binary links 2 or 6 can be replaced by a slider to obtain a slider-crank mechanism. Figure 1.30 (b) and (c) show two variations of the slider obtained by replacing the binary link 6. The slider-crank mechanism of Fig. 1.30(c) is known as *beam engine*.

Example 1.7 *Sketch the equivalent kinematic chains with turning pairs for the chains shown in Fig. 1.31.*

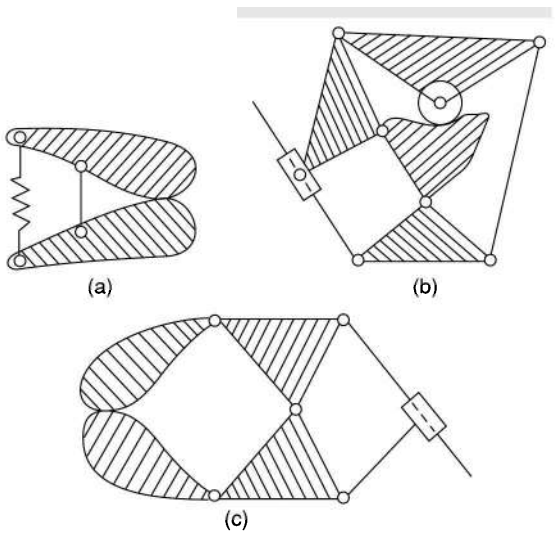

Fig. 1.31

Solution

(a) A spring is equivalent to two binary links connected by a turning pair. A cam pair is equivalent of one binary link with turning pairs at each end. The equivalent chain with turning pairs is shown in Fig. 1.32(a).

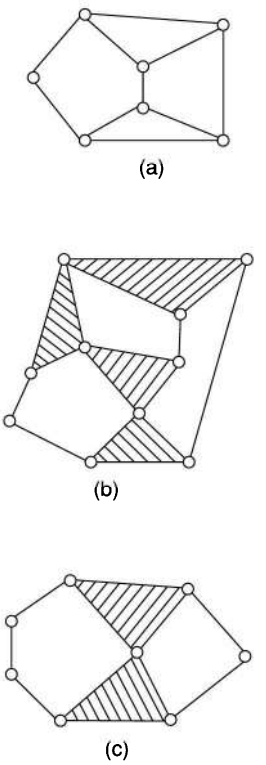

Fig. 1.32

(b) A slider pair can be replaced by one link with a turning pair at the other end. A cam pair with a roller follower can be replaced by a binary link with turning pairs at each end similar to the case of a curved-face follower of Fig. 1.28(d). the equivalent chain is shown in Fig. 1.32(b).

(c) The equivalent chain has been shown in Fig. 1.32(c).

1.13 THE FOUR-BAR CHAIN

A four-bar chain is the most fundamental of the plane kinematic chains. It is a much preferred mechanical device for the mechanisation and control of motion due to its simplicity and versatility. Basically, it consists of four rigid links which are connected in the form of a quadrilateral by four pin-joints. When one of the links is fixed, it is known as a *linkage* or *mechanism*. A link that makes complete revolution is called the *crank*, the link opposite to the fixed link is called the *coupler*, and the fourth link is called a *lever* or *rocker* if it oscillates or another crank, if it rotates.

Note that it is impossible to have a four-bar linkage if the length of one of the links is greater than the sum of the other three. This has been shown in Fig. 1.33 in which the length of link d is more than the sum of lengths of a, b and c, and therefore, this linkage cannot exist.

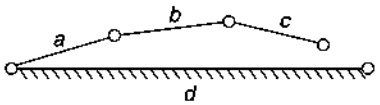

Fig. 1.33

Consider a four-link mechanism shown in Fig. 1.34(a) in which the length a of the link AB is more than d, the length of the fixed link AD. The linkage has been shown in various positions. It can be observed from these configurations that if the link a is to rotate through a full revolution, i.e., if it is to be a crank, then the following conditions must be met:

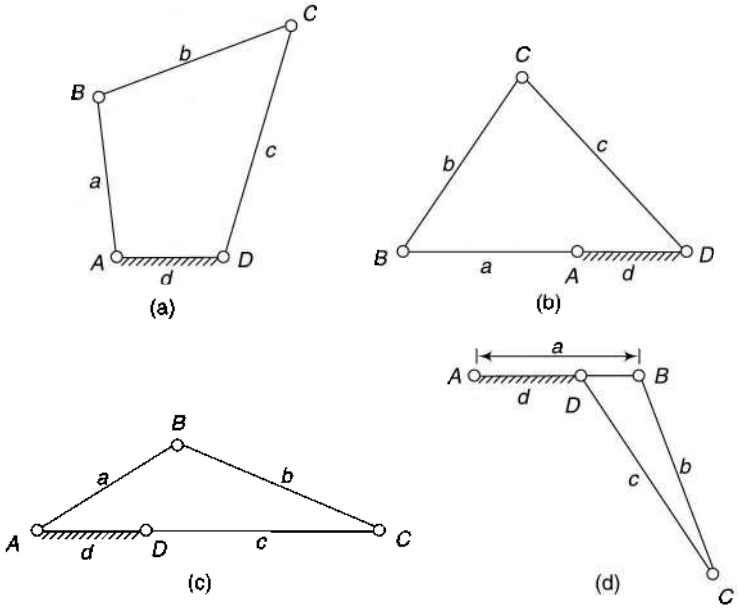

Fig. 1.34

From Fig. 1.34(b), $d + a < b + c$ (i)

From Fig. 1.34(c), $d + c < a + b$ (ii)

From Fig. 1.34(d), $b < c + (a - d)$ or $d + b < c + a$ (iii)

Adding (i) and (ii), $2d + a + c < 2b + a + c$

or $d < b$

Similarly, adding (ii) and (iii), and (iii) and (i) we get

$d < a$

and $d < c$

Thus, d is less than a, b and c, i.e., it is the shortest link if a is to rotate a full circle or act as a crank. The above inequalities also suggest that out of a, b and c, whichever is the longest, the sum of that with d, the shortest link will be less than the sum of the remaining two links. Thus, the necessary conditions for the link a to be a crank is

- the shortest link is fixed, and
- the sum of the shortest and the longest links is less than the sum of the other two links.

In a similar way, it can be shown that if the link c is to rotate through a full circle, i.e., if it is to be a crank then the conditions to be realised are the same as above. Also, it can be shown that if both the links a and c rotate through full circles, the link b also makes one complete revolution relative to the fixed link d.

The mechanism thus obtained is known as *crank-crank* or *double-crank* or *drag-crank mechanism* or *rotary-rotary converter.* Figure 1.35 shows all the three links a, b and c rotating through one complete revolution.

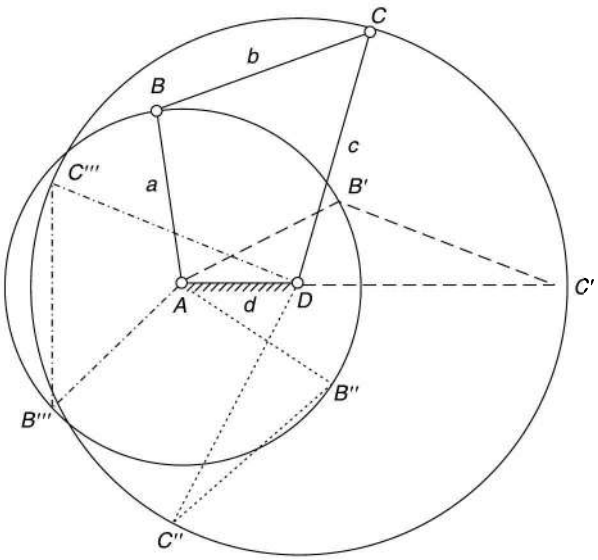

Fig. 1.35

In the above consideration, the rotation of the links is observed relative to the fixed link d. Now, consider the movement of b relative to either a or c. The complete rotation of b relative to a is possible if the angle $\angle ABC$ can be more than 180° and relative to c if the angle $\angle DCB$ more than 180°. From the positions of the links in Fig. 1.35(b) and (c), it is clear that these angles cannot become more than 180° for the above stated conditions.

Now, as the relative motion between two adjacent links remains the same irrespective of which link is fixed to the frame, different mechanisms (known as *inversions*) obtained by fixing different links of this kind of chain will be as follows:

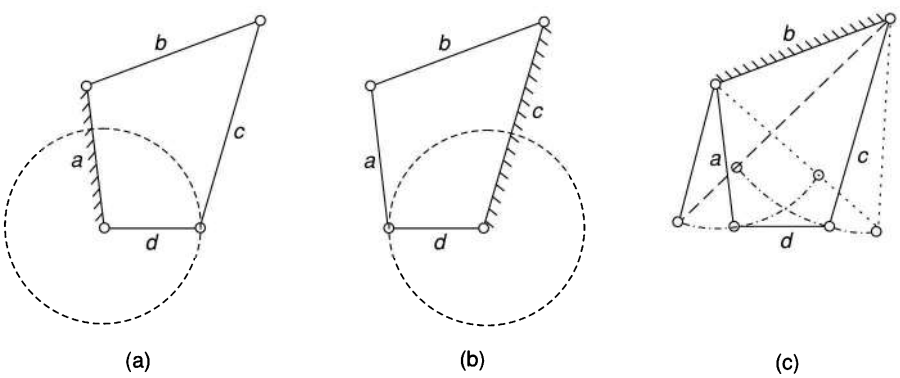

Fig. 1.36

1. If any of the adjacent links of link *d,* i.e., *a* or *c* is fixed, *d* can have a full revolution (crank) and the link opposite to it oscillates (rocks). In Fig. 1.36(a), *a* is fixed, *d* is the crank and *b* oscillates whereas in Fig. 1.36(b), *c* is fixed, *d* is the crank and *b* oscillates. The mechanism is known as *crank-rocker* or *crank-lever mechanism* or *rotary-oscillating converter.*
2. If the link opposite to the shortest link, i.e., link *b* is fixed and the shortest link *d* is made a coupler, the other two links *a* and *c* would oscillate [Fig. 1.36(c)]. The mechanism is known as a *rocker-rocker* or *double-rocker* or *double-lever mechanism* or *oscillating-oscillating converter.*

A linkage in which the sum of the lengths of the longest and the shortest links is less than the sum of the lengths of the other two links, is known as a *class-I,* four-bar linkage.

When the sum of the lengths of the largest and the shorted links is more than the sum of the lengths of the other two links, the linkage is known as a *class-II*, four-bar linkage. In such a linkage, fixing of any of the links always results in a *rocker-rocker* mechanism. In other words, the mechanism and its inversions give the same type of motion (of a *double-rocker* mechanism).

The above observations are summarised in *Grashof's law* which states *that a four-bar mechanism has at least one revolving link if the sum of the lengths of the largest and the shortest links is less than the sum of lengths of the other two links.*

Further, if the s*hortest link is fixed,* the chain will act as a double-crank mechanism in which links adjacent to the fixed link will have complete revolutions. If the *link opposite to the shortest link is fixed*, the chain will act as double-rocker mechanism in which links adjacent to the fixed link will oscillate. If the *link adjacent to the shortest link is fixed*, the chain will act as crank-rocker mechanism in which the shortest link will revolve and the link adjacent to the fixed link will oscillate.

If the sum of the lengths of the largest and the shorted links is equal to the sum of the lengths of the other two links, i.e., when equalities exist, the four inversions, in general, result in mechanisms similar to those as given by Grashof's law, except that sometimes the links may become collinear and may have to be guided in the proper direction. Usually, the purpose is served by the inertia of the links. A few special cases may arise when equalities exist. For example, *parallel-crank four-bar linkage* and *deltoid* linkage.

Parallel-Crank Four-Bar Linkage If in a four-bar linkage, two opposite links are parallel and equal in length, then any of the links can be made fixed. The two links adjacent to the fixed link will always act as two cranks. The four links form a parallelogram in all the positions of the cranks, provided the cranks rotate in the same sense as shown in Fig. 1.37.

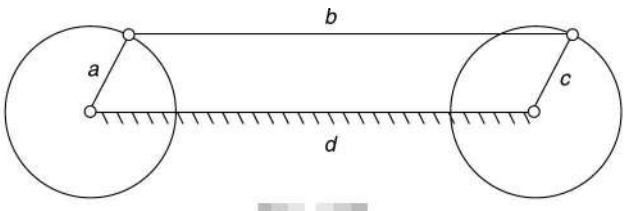

Fig. 1.37

The use of such a mechanism is made in the coupled wheels of a locomotive in which the rotary motion of one wheel is transmitted to the other wheel. For kinematic analysis, link *d* is treated as fixed and the relative motions of the other links are found. However, in fact, *d* has a translatory motion parallel to the rails.

Deltoid Linkage In a deltoid linkage (Fig. 1.38), the equal links are adjacent to each other. When any of the shorter links is fixed, a double-crank mechanism is obtained in which one revolution of the longer link causes two revolutions of the other shorter link. As shown in Fig. 1.38 (a), when the link *c* rotates through half a revolution and assumes the position *DC′*, the link *a* has completed a full revolution.

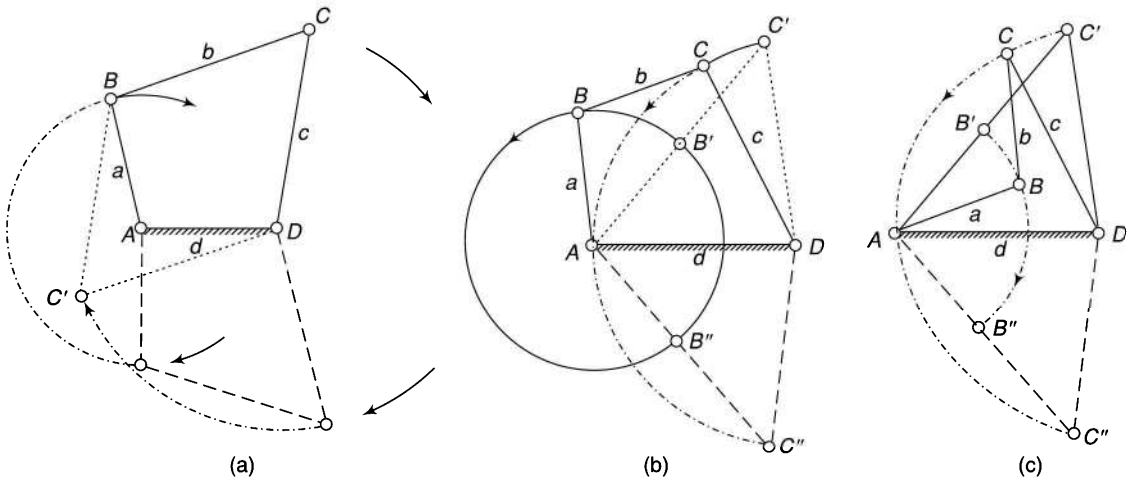

Fig. 1.38

When any of the longer links is fixed, two crank-rocker mechanisms are obtained [Fig. 1.38(b) and (c)]

Example 1.8 *Find all the inversion of the chain given in Fig. 1.39.*

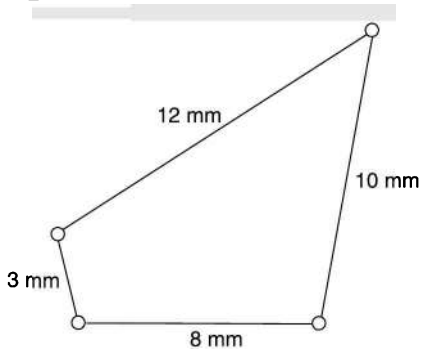

Fig. 1.39

Solution

(a) Length of the longest link = 12 mm
Length of the shortest link = 3 mm
Length of other links = 10 mm and 8 mm
Since 12 + 3 < 10 + 8, it belongs to the class-I mechanism and according to Grashoff's law, three distinct inversions are possible.

Shortest link fixed, i.e., when the link with 3-mm length is fixed, the chain will act as double-crank mechanism in which links with lengths of 12 mm and 8 mm will have complete revolutions.

Link opposite to the shortest link fixed, i.e., when the link with 10-mm length is fixed, the chain will act as double-rocker mechanism in which links with lengths of 12 mm and 8 mm will oscillate.

Link adjacent to the shortest link fixed, i.e., when any of the links adjacent to the shortest link, i.e., link with a length of 12-mm or 8 mm is fixed, the chain will act as crank-rocker mechanism in which the shortest link of 3-mm length will revolve and the link with 10-mm length will oscillate.

Example 1.9 *Figure 1.40 shows some four-link mechanisms in which the figures indicate the dimensions in standard units of length. Indicate the type of each mechanism whether crank-rocker or double-crank or double-rocker.*

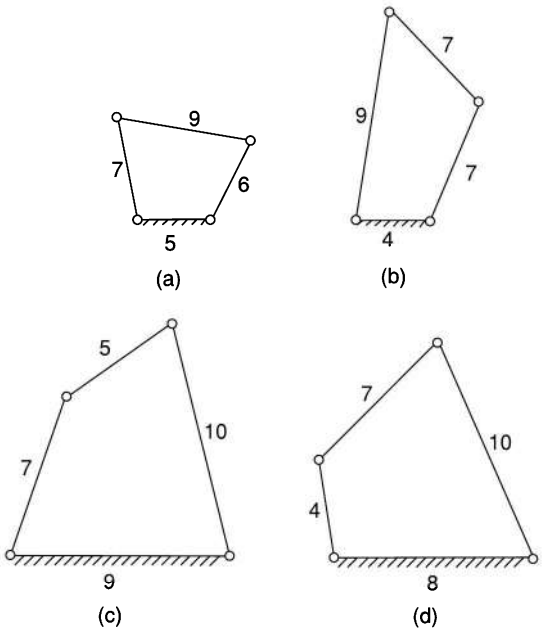

Fig. 1.40

Solution

(a) Length of the longest link = 9
Length of the shortest link = 5
Length of other links = 7 and 6
Since 9 + 5 > 7 + 6, it does not belong to the class-I mechanism. Therefore, it is a double-rocker mechanism.

(b) Length of the longest link = 9
Length of the shortest link = 4
Length of other links = 7 and 7
Since 9 + 4 < 7 + 7, it belongs to the class-I mechanism. In this case as the shortest link is fixed, it is a double-crank mechanism.

(c) Length of the longest link = 10
Length of the shortest link = 5
Length of other links = 9 and 7
Since 10 + 5 < 9 + 7, it belongs to the class-I mechanism. In this case as the link opposite to the shortest link is fixed, it is a double-rocker mechanism.

(d) Length of the longest link = 10
Length of the shortest link = 4
Length of other links = 8 and 7
Since 10 + 4 < 8 + 7, it belongs to the class-I mechanism. In this case as the link adjacent to the shortest link is fixed, it is a crank-rocker mechanism.

Example 1.10 *Figure 1.41 shows a plane mechanism in which the figures indicate the dimensions in standard units of length. The slider C is the driver. Will the link AG revolve or oscillate?*

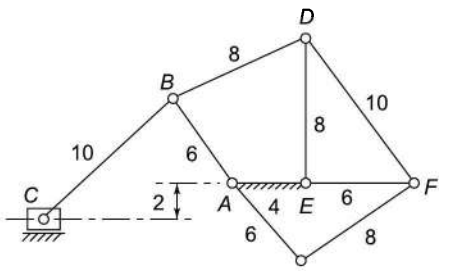

Fig. 1.41

Solution The mechanism has three sub-chains:

(i) *ABC*, a slider-crank chain
(ii) *ABDE*, a four-bar chain
(iii) *AEFG*, a four-bar chain
DEF is a locked chain as it has only three links.

- As the length *BC* is more than the length *AB* plus the offset of 2 units, *AB* acts as a crank and can revolve about *A*.
- In the chain *ABDE*,
  Length of the longest link = 8
  Length of the shortest link = 4
  Length of other links = 8 and 6

Since 8 + 4 < 8 + 6, it belongs to the class-I mechanism. In this case as the shortest link is fixed, it is a double-crank mechanism and thus *AB* and *ED* can revolve fully.

- In the chain *AEFG*,
  Length of the longest link = 8
  Length of the shortest link = 4
  Length of other links = 6 and 6

Since 8 + 4 = 6 + 6, it belongs to the class-I mechanism. As the shortest link is fixed, it is a double-crank mechanism and thus *EF* and *AG* can revolve fully.

As *DEF* is a locked chain with three links, the link *EF* revolves with the revolving of *ED*. With the revolving of *ED*, *AG* also revolves.

1.14 MECHANICAL ADVANTAGE

The *mechanical advantage* (MA) of a mechanism is the ratio of the output force or torque to the input force or torque at any instant. Thus for the linkage of Fig. 1.42, if friction and inertia forces are ignored and the input torque T_2 is applied to the link 2 to drive the output link 4 with a resisting torque T_4 then

Power input = Power output

$$T_2\,\omega_2 = T_4\,\omega_4$$

or $$\text{MA} = \frac{T_4}{T_2} = \frac{\omega_2}{\omega_4}$$

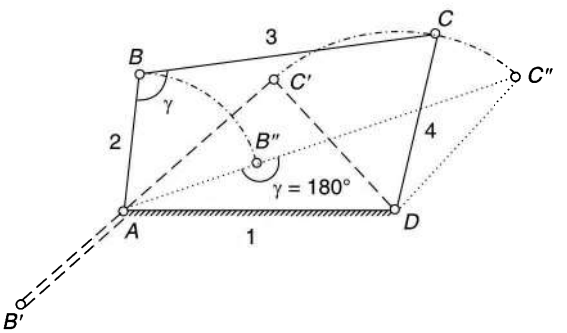

Fig. 1.42

Thus, it is the reciprocal of the velocity ratio. In case of crank-rocker mechanisms, the velocity ω_4 of the output link *DC* (rocker) becomes zero at the extreme positions (*AB′C″D* and *AB″C″D*), i.e., when the input link *AB* is in line with the coupler *BC* and the angle γ between them is either zero or 180°, it makes the mechanical advantage to be infinite at such positions. Only a small input torque can overcome a large output torque load. The extreme positions of the linkage are known as *toggle* positions.

1.15 TRANSMISSION ANGLE

The angle μ between the output link and the coupler is known as *transmission angle*. In Fig. 1.43, if the link *AB* is the input link, the force applied to the output link *DC* is transmitted through the coupler *BC*. For a particular value of force in the coupler rod, the torque transmitted to the output link (about the point *D*) is maximum when the transmission angle μ is 90°. If links *BC* and *DC* become coincident, the *transmission angle* is zero and the mechanism would lock or jam. If μ deviates significantly from 90°, the torque on the output link decreases. Sometimes, it may not be sufficient to overcome the friction in the system and the mechanism may be locked or jammed. Hence μ is usually kept more than 45°. The best mechanisms, therefore, have a transmission angle that does not deviate much from 90°.

Applying cosine law to triangles *ABD* and *BCD* (Fig. 1.43),

$$a^2 + d^2 - 2ad\cos\theta = k^2 \qquad \text{(i)}$$

and $$b^2 + c^2 - 2bc\cos\mu = k^2 \qquad \text{(ii)}$$

From (i) and (ii),

$$a^2 + d^2 - 2ad\cos\theta = b^2 + c^2 - 2bc\cos\mu$$

or $$a^2 + d^2 - b^2 - c^2 - 2ad\cos\theta + 2bc\cos\mu = 0$$

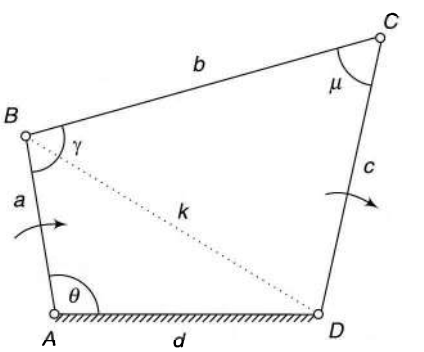

Fig. 1.43

The maximum or minimum values of the transmission angle can be found by putting $d\mu/d\theta$ equal to zero.

Differentiating the above equation with respect to θ,

$$2\,ad \sin\theta - 2bc \sin\mu . \frac{d\mu}{d\theta} = 0$$

or $$\frac{d\mu}{d\theta} = \frac{ad \sin\theta}{bc \sin\mu}$$

Thus, if $d\mu/d\theta$ is to be zero, the term $ad \sin\theta$ has to be zero which means θ is either 0° or 180°. It can be seen that μ is maximum when θ is 180° and minimum when θ is 0°. However, this would be applicable to the mechanisms in which the link a is able to assume these angles, i.e., in double-crank or crank-rocker mechanisms. Figures 1.44(a) and (b) show a crank-rocker mechanism indicating the positions of the maximum and the minimum transmission angles. Figures 1.45(a) and (b) show the maximum and the minimum transmission angles for a double-rocker mechanism.

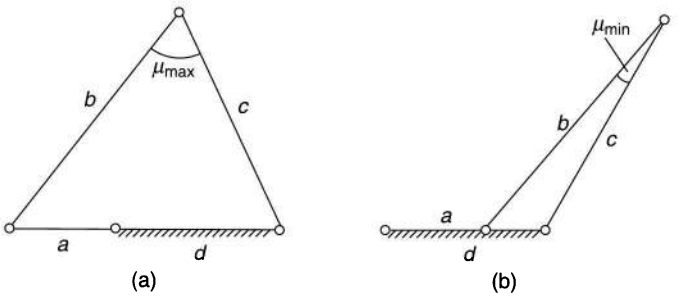

Fig. 1.44

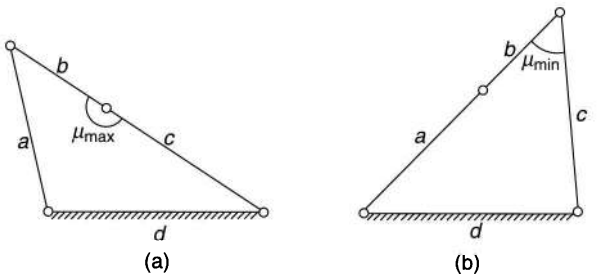

Fig. 1.45

Example 1.11 *Find the maximum and minimum transmission angles for the mechanisms shown in Fig. 1.46. The figures indicate the dimensions in standard units of length.*

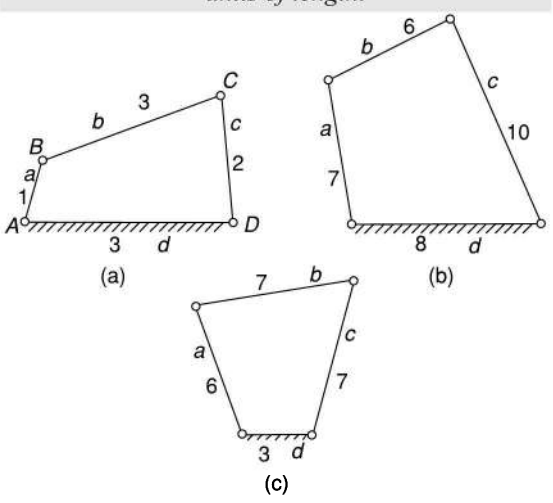

Fig. 1.46

Solution

(a) In this mechanism,

Length of the longest link = 3

Length of the shortest link = 1

Length of other links = 3 and 2

Since 3 + 1 < 3 + 2, it belongs to the class I mechanism. In this case as the link adjacent to the shortest link is fixed, it is a crank-rocker mechanism.

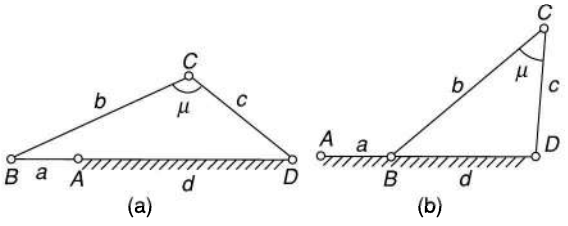

Fig. 1.47

Maximum transmission angle is when θ is 180° [Fig. 1.47(a)],

Thus $(a + d)^2 = b^2 + c^2 - 2bc \cos\mu$

$(1 + 3)^2 = 3^2 + 2^2 - 2 \times 3 \times 2 \cos\mu$

$16 = 9 + 4 - 12 \cos\mu$

$$\cos\mu = -\frac{3}{12} = -0.25$$

$$\mu = 104.5^\circ$$

Minimum transmission angle is when θ is 0° [Fig. 1.47(b)],

Thus $(d-a)^2 = b^2 + c^2 - 2bc\cos\mu$

$$(3-1)^2 = 3^2 + 2^2 - 2\times 3\times 2\cos\mu$$

$$4 = 9 + 4 - 12\cos\mu$$

$$\cos\mu = \frac{3}{4} = 0.75$$

$$\mu = 41.4^\circ$$

(b) In this mechanism,

Length of the longest link = 10

Length of the shortest link = 6

Length of other links = 8 and 7

Since 10 + 6 > 8 + 7, it belongs to the class-II mechanism and thus is a double-rocker mechanism.

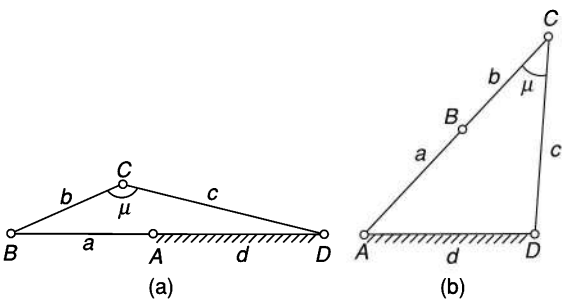

Fig. 1.48

Maximum transmission angle is when θ is 180° [Fig. 1.48(a)],

Thus, $(a+d)^2 = b^2 + c^2 - 2bc\cos\mu$

$$(7+8)^2 = 6^2 + 10^2 - 2\times 6\times 10\cos\mu$$

$$225 = 36 + 100 - 120\cos\mu$$

$$\cos\mu = -\frac{89}{120} = -0.742$$

$$\mu = 137.9^\circ$$

Minimum transmission angle is when the angle at B is 180° [Fig. 1.48(b)],

Thus, $d^2 = (a+b)^2 + c^2 - 2(a+b)c\cos\mu$

$$8^2 = (7+6)^2 + 10^2 - 2(7+6)\times 10\times\cos\mu$$

$$64 = 169 + 100 - 260\cos\mu$$

$$\cos\mu = \frac{205}{260} = 0.788$$

$$\mu = 38^\circ$$

(c) In this mechanism,

Length of the longest link = 7

Length of the shortest link = 3

Length of other links = 6 and 6

Since 7 + 3 < 6 + 6, it belongs to the class-I mechanism. In this case as the shortest link is fixed, it is a double-crank or drag-link mechanism.

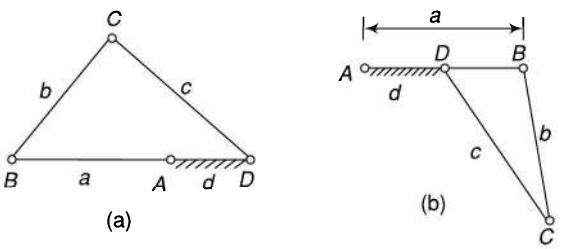

Fig. 1.49

Maximum transmission angle is when θ is 180° [Fig. 1.49(a)],

Thus $(a+d)^2 = b^2 + c^2 - 2bc\cos\mu$

$$(6+3)^2 = 6^2 + 7^2 - 2\times 6\times 7\cos\mu$$

$$81 = 36 + 49 - 84\cos\mu$$

$$\cos\mu = \frac{4}{84} = 0.476$$

$$\mu = 87.27^\circ$$

Minimum transmission angle is when θ is 0° [Fig. 1.49(b)],

Thus $(a-d)^2 = b^2 + c^2 - 2bc\cos\mu$

$$(6-3)^2 = 6^2 + 7^2 - 2\times 6\times 7\cos\mu$$

$$9 = 36 + 49 - 84\cos\mu$$

$$\cos\mu = \frac{76}{84} = 0.9048$$

$$\mu = 25.2^\circ$$

Example 1.12 *A crank-rocker mechanism has a 70-mm fixed link, a 20-mm crank, a 50-mm coupler, and a 70-mm rocker. Draw the mechanism and determine the maximum and minimum values of the transmission angle. Locate the two toggle positions and find the corresponding crank angles and the transmission angles.*

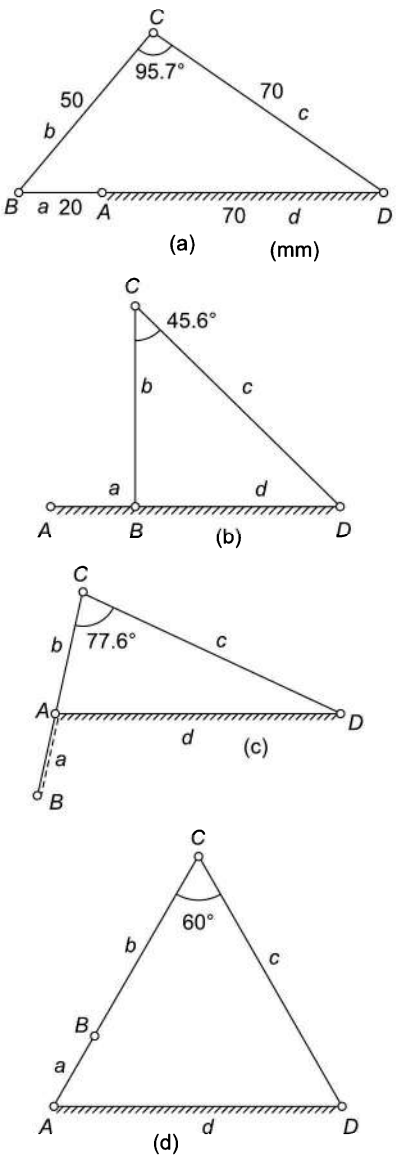

Fig. 1.50

Solution In this mechanism,

Length of the longest link = 70 mm

Length of the shortest link = 20 mm

Length of other links = 70 and 50 mm

Since 70 + 20 < 70 + 50, it belongs to the class-I mechanism. In this case as the link adjacent to the shortest link is fixed, it is a crank-rocker mechanism.

Maximum transmission angle is when θ is 180° [Fig. 1.50(a)],

Thus $(a + d)^2 = b^2 + c^2 - 2bc \cos \mu$

$$(20 + 70)^2 = 50^2 + 70^2 - 2 \times 50 \times 70 \cos \mu$$

$$8100 = 2500 + 4900 - 7000 \cos \mu$$

$$\cos \mu = -0.1$$

$$\mu = 95.7^\circ$$

Minimum transmission angle is when θ is 0° [Fig. 1.50(b)],

Thus $(70 - 20)^2 = 50^2 + 70^2 - 2 \times 50 \times 70 \cos \mu$

$$2500 = 2500 + 4900 - 7000 \cos \mu$$

$$\cos \mu = 0.7$$

$$\mu = 45.6^\circ$$

The two toggle positions are shown in Figs 1.50(c) and (d).

Transmission angle for first position,

$$d^2 = (b - a)^2 + c^2 - 2(b - a)c \cos \mu$$

$$70^2 = 30^2 + 70^2 - 2 \times 30 \times 70 \cos \mu$$

$$4900 = 900 + 4900 - 4200 \cos \mu$$

$$\cos \mu = 0.214$$

$$\mu = 77.6^\circ$$

As c and d are of equal length [Fig. 1.50(c)], it is an isosceles triangle and thus input angle $\theta = (77.6^\circ + 180^\circ) = 257.6^\circ$

Transmission angle for second position Fig. 1.50(d),

$$d^2 = (b + a)^2 + c^2 - 2(b + a)c \cos \mu$$

$$70^2 = 70^2 + 70^2 - 2 \times 70 \times 70 \cos \mu$$

$$4900 = 4900 + 4900 - 9800 \cos \mu$$

$$\cos \mu = 0.5$$

$$\mu = 60^\circ$$

(or as all the sides of the triangle of Fig. 1.50(d) are of equal length, it is an equilateral triangle and thus transmission angle is equal to 60°)

And the input angle, $\theta = 60^\circ$

- The above results can also be obtained graphically by drawing the figures to scale and measuring the angles.

1.16 THE SLIDER-CRANK CHAIN

When one of the turning pairs of a four-bar chain is replaced by a sliding pair, it becomes a *single slider-crank chain* or simply a *slider-crank chain*. It is also possible to replace two sliding pairs of a four-bar chain to get a *double slider-crank chain* (Sec. 1.17). Further, in a slider-crank chain, the straight line path of the slider may be passing through the fixed pivot O or may be displaced. The distance e between the fixed pivot O and the straight line path of the slider is called the *offset* and the chain so formed an *offset slider-crank chain.*

Different mechanisms obtained by fixing different links of a kinematic chain are known as its *inversions*. A slider-crank chain has the following inversions:

First Inversion

This inversion is obtained when link 1 is fixed and links 2 and 4 are made the crank and the slider respectively [Fig. 1.51(a)].

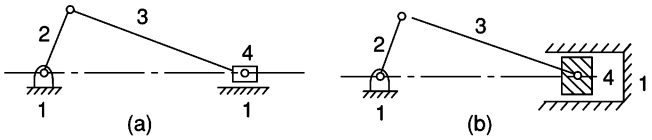

Fig. 1.51

Applications

1. Reciprocating engine
2. Reciprocating compressor

As shown in Fig. 1.51(b), if it is a reciprocating engine, 4 (piston) is the driver and if it is a compressor, 2 (crank) is the driver.

Second Inversion

Fixing of the link 2 of a slider-crank chain results in the second inversion.

The slider-crank mechanism of Fig. 1.51(a) can also be drawn as shown in Fig. 11.52(a). Further, when its link 2 is fixed instead of the link 1, the link 3 along with the slider at its end B becomes a crank. This makes the link 1 to rotate about O along with the slider which also reciprocates on it [Fig. 1.52(b)].

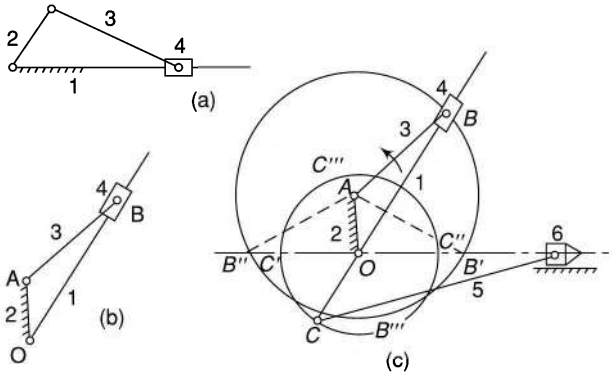

Fig. 1.52

Applications

1. Whitworth quick-return mechanism
2. Rotary engine

Whitworth Quick-Return Mechanism It is a mechanism used in workshops to cut metals. The forward stroke takes a little longer and cuts the metal whereas the return stroke is idle and takes a shorter period.

Slider 4 rotates in a circle about A and slides on the link 1 [Fig. 1.52(c)]. C is a point on the link 1 extended backwards where the link 5 is pivoted. The other end of the link 5 is pivoted to the tool, the forward stroke of which cuts the metal. The axis of motion of the slider 6 (tool) passes through O and is perpendicular to OA, the fixed link. The crank 3 rotates in the counter-clockwise direction.

Initially, let the slider 4 be at B' so that C be at C'. Cutting tool 6 will be in the extreme left position. With the movement of the crank, the slider traverses the path $B'BB''$ whereas the point C moves through $C'CC''$. Cutting tool 6 will have the forward stroke. Finally, the slider B assumes the position B'' and the cutting tool 6 is in the extreme right position. The time taken for the forward stroke of the slider 6 is proportional to the obtuse angle $B''AB'$ at A.

Similarly, the slider 4 completes the rest of the circle through the path $B''B'''B'$ and C passes through $C''C'''C'$. There is backward stroke of the tool 6. The time taken in this is proportional to the acute angle $B''AB'$ at A.

Let

θ = obtuse angle $B'AB''$ at A

β = acute angle $B'AB''$ at A

Then,

$$\frac{\text{Time of cutting}}{\text{Time of return}} = \frac{\theta}{\beta}$$

A nine-cylinder rotary engine

Rotary Engine Referring Fig. 1.52(b), it can be observed that with the rotation of the link 3, the link 1 rotates about O and the slider 4 reciprocates on it. This also implies that if the slider is made to reciprocate on the link 1, the crank 3 will rotate about A and the link 1 about O.

In a rotary engine, the slider is replaced by a piston and the link 1 by a cylinder pivoted at O. Moreover, instead of one cylinder, seven or nine cylinders symmetrically placed at regular intervals in the same plane or in parallel planes, are used. All the cylinders rotate about the same fixed centre and form a balanced system. The fixed link 2 is also common to all cylinders (Fig. 1.53).

Thus, in a rotary engine, the crank 2 is fixed and the body 1 rotates whereas in a reciprocating engine (1st inversion), the body 1 is fixed and the crank 2 rotates.

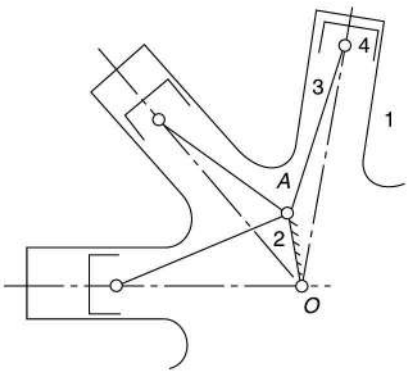

Fig. 1.53

Third Inversion

By fixing the link 3 of the slider-crank mechanism, the third inversion is obtained [Fig. 1.54(a)]. Now the link 2 again acts as a crank and the link 4 oscillates.

Applications

1. Oscillating cylinder engine
2. Crank and slotted-lever mechanism

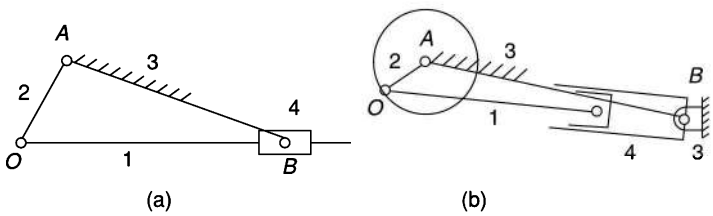

Fig. 1.54

Oscillating Cylinder Engine As shown in Fig. 1.54(b), the link 4 is made in the form of a cylinder and a piston is fixed to the end of the link 1. The piston reciprocates inside the cylinder pivoted to the fixed link 3. The arrangement is known as oscillating cylinder engine, in which as the piston reciprocates in the oscillating cylinder, the crank rotates.

Crank and Slotted-Lever Mechanism If the cylinder of an oscillating cylinder engine is made in the form of a guide and the piston in the form of a slider, the arrangement as shown in Fig. 1.55(a) is obtained. As the crank rotates about A, the guide 4 oscillates about B. At a point C on the guide, the link 5 is pivoted, the other end of which is connected to the cutting tool through a pivoted joint.

Figure 1.55(b) shows the extreme positions of the oscillating guide 4. The time of the forward stroke is proportional to the angle θ whereas for the return stroke, it is proportional to angle β, provided the crank rotates clockwise.

Comparing a crank and slotted-lever quick-return mechanism with a Whitworth quick-return mechanism, the following observations are made:

1. Crank 3 of the Whitworth mechanism is longer than its fixed link 2 whereas the crank 2 of the slotted-lever mechanism is shorter than its fixed link 3.
2. Coupler link 1 of the Whitworth mechanism makes complete rotations about its pivoted joint O with the fixed link. However, the coupler link 4 of the slotted-lever mechanism oscillates about its pivot B.
3. The coupler link holding the tool can be pivoted to the main coupler link at any convenient point C in both cases. However, for the same displacement of the tool, it is more convenient if the point C is taken on the extension of the main coupler link (towards the pivot with the fixed link) in case of the Whitworth mechanism and beyond the extreme position of the slider in the slotted-lever mechanism.

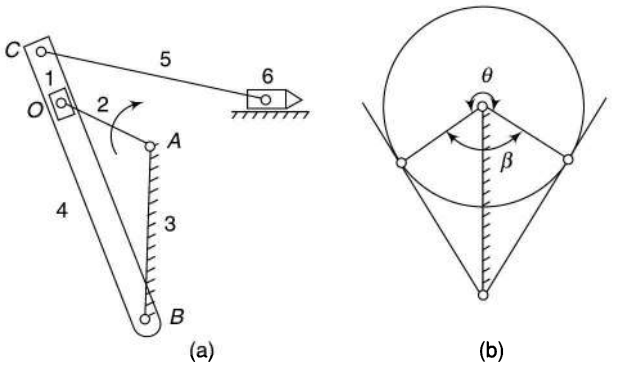

Fig. 1.55

A shaping machine. Shaping machines are fitted with quick-return mechanisms.

Fourth Inversion

If the link 4 of the slider-crank mechanism is fixed, the fourth inversion is obtained [Fig. 1.56(a)]. Link 3 can oscillate about the fixed pivot B on the link 4. This makes the end A of the link 2 to oscillate about B and the end O to reciprocate along the axis of the fixed link 4.

Application Hand-pump

Figure 1.56(b) shows a hand-pump. Link 4 is made in the form of a cylinder and a plunger fixed to the link 1 reciprocates in it.

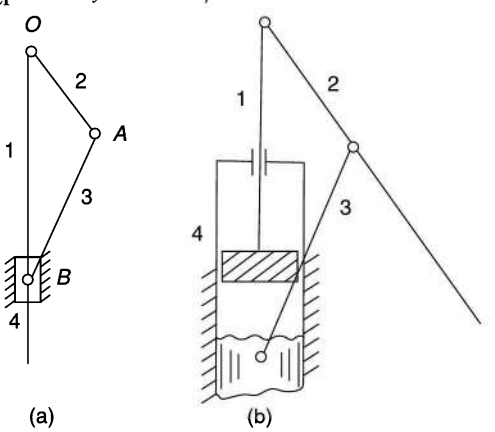

Fig. 1.56

Example 1.13 *The length of the fixed link of a crank and slotted-lever mechanism is 250 mm and that of the crank is 100 mm. Determine the*

(i) inclination of the slotted lever with the vertical in the extreme position,

(ii) ratio of the time of cutting stroke to the time of return stroke, and

(iii) length of the stroke, if the length of the slotted lever is 450 mm and the line of stroke passes through the extreme positions of the free end of the lever.

Solution Refer Fig. 1.57.

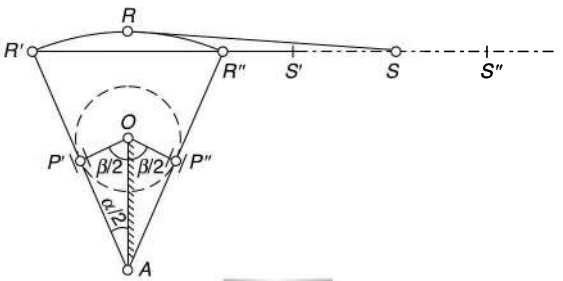

Fig. 1.57

$OA = 250$ mm $\quad OP' = OP'' = 100$ mm

$AR' = AR'' = AR = 450$ mm

$$\cos\frac{\beta}{2} = \frac{OP'}{OA} = \frac{100}{250} = 0.4$$

or $\dfrac{\beta}{2} = 66.4°$ or $\beta = 132.8°$

(i) Angle of the slotted lever with the vertical $\alpha/2 = 90° - 66.4° = 23.6°$

(ii) $\dfrac{\text{Time of cutting stroke}}{\text{Time of return stroke}}$

$$= \frac{360° - \beta}{\beta} = \frac{360° - 132.8°}{132.8°} = 1.71$$

(iii) Length of stroke $= S'S'' = R'R''$

$= 2\,AR'.\sin(\alpha/2)$

$= 2 \times 450 \sin 23.6°$

$= 360.3$ mm

1.17 DOUBLE SLIDER-CRANK CHAIN

A four-bar chain having two turning and two sliding pairs such that two pairs of the same kind are adjacent is known as a double-slider-crank chain [Fig. 1.58(a)]. The following are its inversions.

First Inversion

This inversion is obtained when the link 1 is fixed and the two adjacent pairs 23 and 34 are turning pairs and the other two pairs 12 and 41 sliding pairs.

Application Elliptical trammel

Elliptical Trammel Figure 1.58(b) shows an elliptical trammel in which the fixed link 1 is in the form of guides for sliders 2 and 4. With the movement of the sliders, any point C on the link 3, except the midpoint of AB will trace an ellipse on a fixed plate. The midpoint of AB will trace a circle.

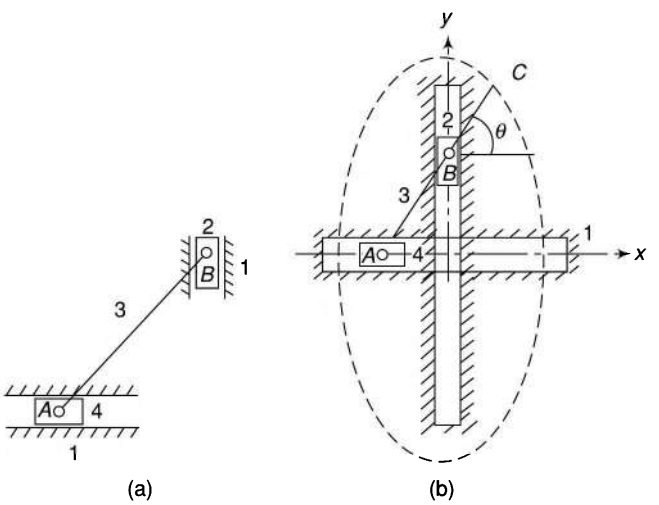

Fig. 1.58

Let at any instant, the link 3 make angle θ with the X-axis. Considering the displacements of the sliders from the centre of the trammel,

$$x = BC\cos\theta \text{ and } y = AC\sin\theta$$

$$\therefore \quad \frac{x}{BC} = \cos\theta \text{ and } \frac{y}{AC} = \sin\theta$$

Squaring and adding,

$$\frac{x^2}{(BC)^2} + \frac{y^2}{(AC)^2} = \cos^2\theta + \sin^2\theta = 1$$

This is the equation of an ellipse. Therefore, the path traced by C is an ellipse with the semi-major and semi-minor axes being equal to AC and BC respectively.

When C is the midpoint of AB; $AC = BC$,

and

$$\frac{x^2}{(BC)^2} + \frac{y^2}{(AC)^2} = 1 \qquad \text{or} \qquad x^2 + y^2 = (AC)^2$$

which is the equation of a circle with AC (=BC) as the radius of the circle.

Second Inversion

If any of the slide-blocks of the first inversion is fixed, the second inversion of the double-slider-crank chain is obtained. When the link 4 is fixed, the end B of the crank 3 rotates about A and the link 1 reciprocates in the horizontal direction.

Application Scotch yoke

Scotch Yoke A scotch-yoke mechanism (Fig. 1.59) is used to convert the rotary motion into a sliding motion. As the crank 3 rotates, the horizontal portion of the link 1 slides or reciprocates in the fixed link 4.

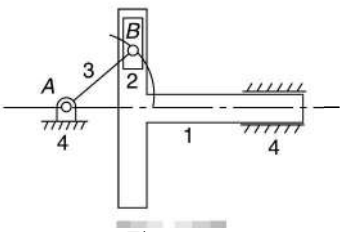

Fig. 1.59

Third Inversion

This inversion is obtained when the link 3 of the first inversion is fixed and the link 1 is free to move.

The rotation of the link 1 has been shown in Fig. 1.60 in which the full lines show the initial position. With rotation of the link 4 through 45° in the clockwise direction, the links 1 and 2 rotate through the same angle whereas the midpoint of the link 1 rotates through 90° in a circle with the length of link 3 as diameter. Thus, the angular velocity of the midpoint of the link 1 is twice that of links 2 and 4.

The sliding velocity of the link 1 relative to the link 4 will be maximum when the midpoint of the link 1 is at the axis of the link 4. In this position, the sliding velocity is equal to the tangential velocity of the midpoint of the link 1.

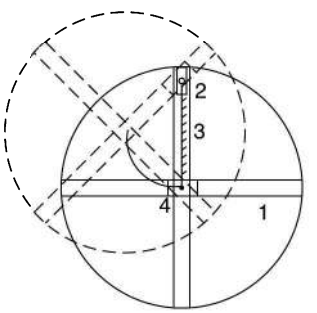

Fig. 1.60

Maximum sliding velocity = tangential velocity of midpoint of the link 1
= angular velocity of midpoint of the link 1 × radius
= (2 × angular velocity of the link 4) × (distance between axes of links 2 and 4)/2
= angular velocity of link 4 × distance between axes of links 2 and 4

The sliding velocity of the link 1 relative to the link 4 is zero when the midpoint of 1 is on the axis of the link 2.

Application Oldham's coupling

Oldham's Coupling If the rotating links 2 and 4 of the mechanism are replaced by two shafts, one can act as the driver and the other as the driven shaft with their axes at the pivots of links 2 and 4.

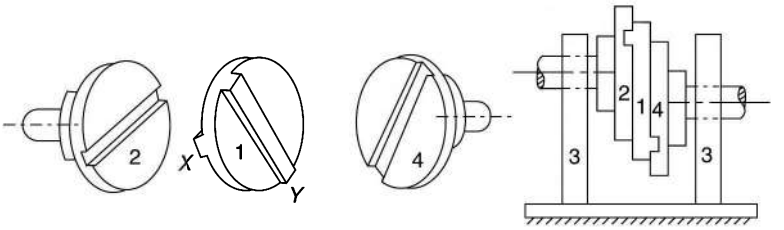

Fig. 1.61

Figure 1.61 shows an actual Oldham's coupling which is used to connect two parallel shafts when the distance between their axes is small. The two shafts have flanges at the ends and are supported in the fixed bearings representing the link 3. In the flange 2, a slot is cut in which the tongue X of the link 1 is fitted and has a sliding motion. Link 1 is made circular and has another tongue Y at right angles to the first and which fits in the recess of the flange of the shaft 4. Thus, the intermediate link 1 slides in the two slots in the two flanges while having the rotary motion.

As mentioned earlier, the midpoint of the intermediate piece describes a circle with distance between the axes of the shafts as diameter. The maximum sliding velocity of each tongue in the slot will be the peripheral velocity of the midpoint of the intermediate disc along the circular path.

Maximum sliding velocity = peripheral velocity along the circular path
= angular velocity of shaft × distance between shafts

Example 1.14 *The distance between two parallel shafts is 18 mm and they are connected by an Oldham's coupling. The driving shaft revolves at 160 rpm. What will be the maximum speed of sliding of the tongue of the intermediate piece along its groove?*

Solution $\omega = \dfrac{2\pi \times 160}{60} = 16.75$ rad/s

Maximum velocity of sliding $= \omega \times d$
$= 16.75 \times 0.018$
$= 0.302$ m/s

1.18 MISCELLANEOUS MECHANISMS

Snap-Action Mechanisms

The mechanisms used to overcome a large resistance of a member with a small driving force are known as *snap action* or *toggle* mechanisms. They find their use in a variety of machines such as stone crushers, embossing presses, switches, etc. Figure 1.62(a) shows such a type of mechanism in which links of equal lengths 4 and 5 are connected by a pivoted joint at B. Link 4 is free to oscillate about the pivot C and the link 5 is connected to a sliding link 6. Link 3 joins links 4 and 5. When force is applied at the point B through the link 3, the angle α decreases and links 4 and 5 tend to become collinear. At this instant, the force is greatly multiplied at B, i.e., a very small force is required to overcome a great resistance R at the slider. This is because a large movement at B produces a relatively slight displacement of the slider at D. As the angle α approaches zero, reaction at the pivot becomes equal to R and for force balance in the link BC or BD,

$$\frac{F}{2\sin\alpha} = \frac{R}{\cos\alpha}$$

or $$2\tan\alpha = \frac{F}{R}$$

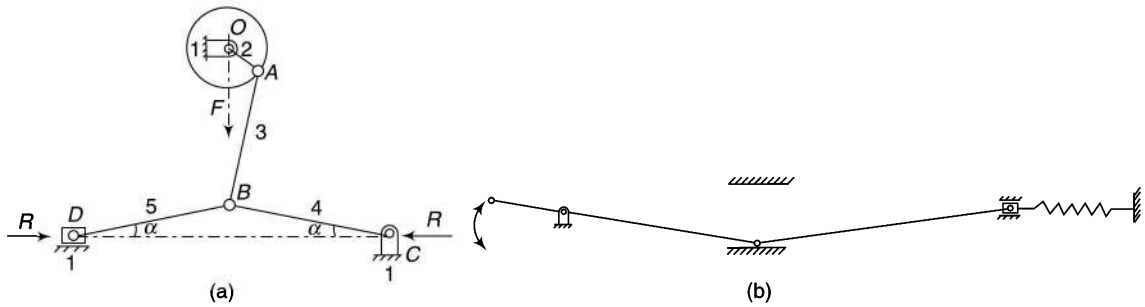

Fig. 1.62

As $\alpha \to 0$, $\tan\alpha \to 0$. Thus for a small value of the force F, R approaches infinity. In a stone crusher, a large resistance at D is overcome with a small force F in this way. Figure 1.62(b) shows another such mechanism.

Indexing Mechanisms

An *indexing mechanism* serves the purpose of dividing the periphery of a circular piece into a number of equal parts. Indexing is generally done on gear cutting or milling machines.

An indexing mechanism consists of an index head in which a spindle is carried in a headstock [Fig. 1.63(a)]. The work to be indexed is held either between centres or in a chuck attached to the spindle. A 40-tooth worm wheel driven by a single-threaded right-hand worm is also fitted to the spindle. At the end of the worm shaft an adjustable index crank with a handle and a plunger pin is also fitted. The plunger pin can be made to fit into any hole in the index plate which has a number of circles of equally spaced holes as shown in Fig. 1.63(b). An index head is usually provided with a number of interchangeable index plates to cover a wide range of work. However, the figure shows only the circle of 17 holes for sake of clarity.

As the worm wheel has 40 teeth, the number of revolutions of the index crank required to make one revolution of the work is also 40. The number of revolutions of the crank, needed for a proper division of the work into the desired number of divisions, can be calculated as follows:

- If a work is to be divided into 40 divisions, the crank should be given one complete revolution; if 20 divisions, two revolutions for each division, and so on.
- If the work is to be divided into 160 divisions, obviously the crank should be rotated through one-fourth of a rotation. For such cases, an index plate with a number of holes divisible by 4 such as with 16 or 20 holes can be chosen.
- If the work is to be divided into 136 parts, the use of the index plate will be essential since the rotation of the crank for each division will be 40/136 or five-seventeenth of a turn. Thus, a plate with 17 holes is selected in this case. To obviate the necessity of counting the holes at each partial turn of the crank, an index sector with two arms which can be set and clamped together at any angle is also available. In this case, this can be set to measure off 5 spaces. Starting with the crankpin in the hole a, a cut would be made in the work. The crank is rotated and the pin is made to enter into the hole b, 5 divisions apart and a second cut is made in the work. In a similar way, a third cut is made by rotating the crank again through five divisions with the help of an index sector, and so on. Usually, index tables are provided to ascertain the number of turns of the crank and the number of holes for the given case.

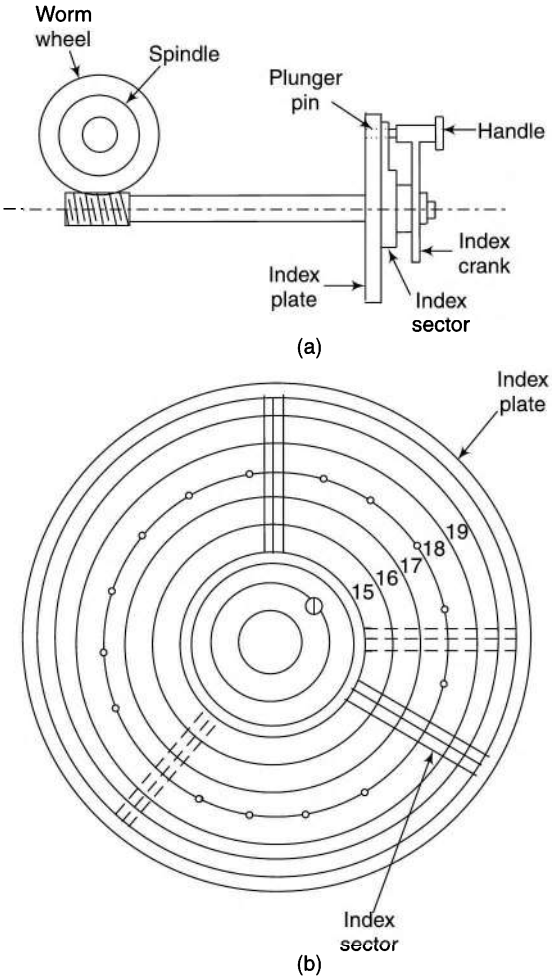

Fig. 1.63

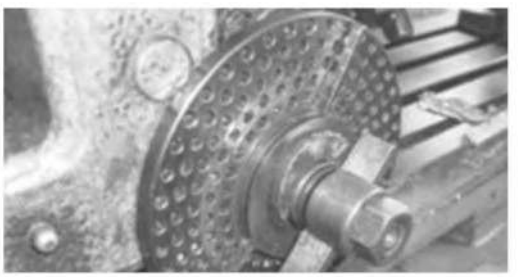

Index plate of an indexing mechanism

Summary

1. *Kinematics* deals with the relative motions of different parts of a mechanism without taking into consideration the forces producing the motions whereas *dynamics* involves the calculation of forces impressed upon different parts of a mechanism.
2. *Mechanism* is a combination of a number of rigid bodies assembled in such a way that the motion of one causes constrained and predictable motion of the others whereas a *machine* is a mechanism or a combination of mechanisms which, apart from imparting definite motions to the parts, also transmits and modifies the available mechanical energy into some kind of useful work.
3. There are three types of constrained motion: *completely constrained, incompletely constrained* and *successfully constrained.*
4. A *link* is a resistant body or a group of resistant bodies with rigid connections preventing their

relative movement. A link may also be defined as a member or a combination of members of a mechanism, connecting other members and having motion relative to them.

5. A *kinematic pair* or simply a pair is a joint of two links having relative motion between them.
6. A pair of links having surface or area contact between the members is known as a *lower pair* and a pair having a point or line contact between the links, a *higher pair.*
7. When the elements of a pair are held together mechanically, it is known as a *closed pair*. The two elements are geometrically identical. When two links of a pair are in contact either due to force of gravity or some spring action, they constitute an *unclosed pair*.
8. Usual types of joints in a chain are binary joint, ternary joint and quaternary joint
9. *Degree of freedom of a pair* is defined as the number of independent relative motions, both translational and rotational, a pair can have.
10. A *kinematic chain* is an assembly of links in which the relative motions of the links is possible and the motion of each relative to the other is definite.
11. A *redundant chain* does not allow any motion of a link relative to the other.
12. A *linkage* or *mechanism* is obtained if one of the links of a kinematic chain is fixed to the ground.
13. *Degree of freedom of a mechanism* indicates how many inputs are needed to have a constrained motion of the other links.
14. *Kutzback's criterion* for the degree of freedom of plane mechanisms is

    $F = 3(N-1) - 2P_1 - 1P_2$
15. *Gruebler's criterion* for degree of freedom of plane mechanisms with single-degree of freedom joints only is

    $F = 3(N-1) - 2P_1$
16. *Author's criterion* for degree of freedom and the number of joints of plane mechanisms with turning pairs is

    $F = N - (2L + 1)$

    $P_1 = N + (L - 1)$
17. In a four-link mechanism, a link that makes a complete revolution is known as a *crank*, the link opposite to the fixed link is called the *coupler* and the fourth link is called a *lever* or *rocker* if it oscillates or another crank, if it rotates.
18. In a Watts six-bar chain, the ternary links are direct connected whereas in a Stephenson's six-bar chain, they are not direct connected.
19. If a system has one or more links which do not introduce any extra constraint, it is known as *redundant link* and is not counted to find the degree of freedom.
20. If a link of a mechanism can be moved without causing any motion to the rest of the links of the mechanism, it is said to have a *redundant degree of freedom.*
21. The *mechanical advantage* (MA) of a mechanism is the ratio of the output force or torque to the input force or torque at any instant.
22. The angle μ between the output link and the coupler is known as *transmission angle*.
23. Different mechanisms obtained by fixing different links of a kinematic chain are known as its *inversions*.
24. The mechanisms used to overcome a large resistance of a member with a small driving force are known as *snap action* or *toggle* mechanisms.
25. An *indexing mechanism* serves the purpose of dividing the periphery of a circular piece into a number of equal parts.

Exercises

1. Distinguish between
   (i) mechanism and machine
   (ii) analysis and synthesis of mechanisms
   (iii) kinematics and dynamics
2. Define: kinematic link, kinematic pair, kinematic chain.
3. What are rigid and resistant bodies? Elaborate.
4. How are the kinematic pairs classified? Explain with examples.
5. Differentiate giving examples:
   (i) lower and higher pairs
   (ii) closed and unclosed pairs
   (iii) turning and rolling pairs
6. What do you mean by degree of freedom of a

kinematic pair? How are pairs classified? Give examples.

7. Discuss various types of constrained motion.
8. What is a redundant link in a mechanism?
9. How do a Watt's six-bar chain and Stephenson's six-bar chain differ?
10. What is redundant degree of freedom of a mechanism?
11. What are usual types of joints in a mechanism?
12. What is the degree of freedom of a mechanism? How is it determined?
13. What is Kutzback's criterion for degree of freedom of plane mechanisms? In what way is Gruebler's criterion different from it?
14. How are the degree of freedom and the number of joints in a linkage can be found when the number of links and the number of loops in a kinematic chain are known?
15. What is meant by equivalent mechanisms?
16. Define Grashof's law. State how is it helpful in classifying the four-link mechanisms into different types.
17. Why are parallel-crank four-bar linkage and deltoid linkage considered special cases of four-link mechanisms?
18. Define mechanical advantage and transmission angle of a mechanism.
19. Describe various inversions of a slider-crank mechanism giving examples.
20. What are quick-return mechanisms? Where are they used? Discuss the functioning of any one of them.
21. How are the Whitworth quick-return mechanism and crank and slotted-lever mechanism different from each other?
22. Enumerate the inversions of a double-slider-crank chain. Give examples.
23. Describe briefly the functions of elliptical trammel and scotch yoke.
24. In what way is Oldham's coupling useful in connecting two parallel shafts when the distance between their axes is small?
25. What are snap-action mechanisms? Give examples.
26. What is an indexing mechanism? Describe how it is used to divide the periphery of a circular piece into a number of equal parts.
27. For the kinematic linkages shown in Fig. 1.64, find the degree of freedom (F).

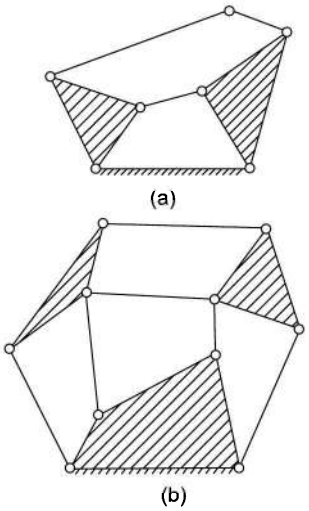

Fig. 1.64

[(a) 1 (b) 0]

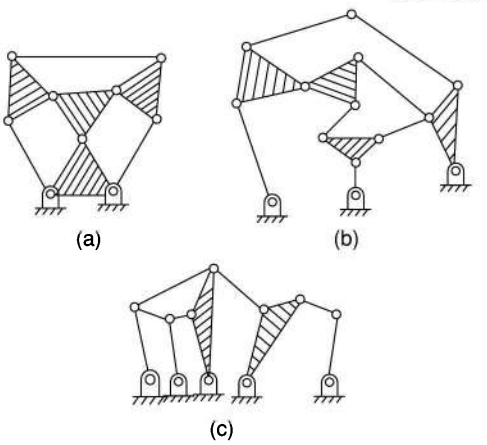

Fig. 1.65

28. For the kinematic linkages shown in Fig 1.65, find the number of binary links (N_b), ternary links (N_t), other links (N_o), total links N, loops L, joints or pairs (P_1), and degree of freedom (F).

[(a) $N_b = 3$; $N_t = 4$; $N_o = 0$; $N = 7$; $L = 3$; $P_1 = 9$; $F = 0$

(b) $N_b = 7$; $N_t = 5$; $N_o = 0$; $N = 12$; $L = 4$; $P_1 = 15$; $F = 3$

(c) $N_b = 8$; $N_t = 2$; $N_o = 1$; $N = 11$; $L = 5$; $P_1 = 15$; $F = 0$]

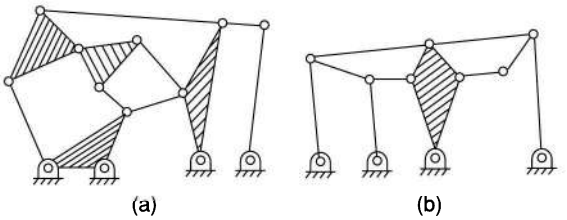

Fig. 1.66

29. Show that the linkages shown in Fig. 1.66 are structures. Suggest some changes to make them mechanisms having one degree of freedom. The number of links should not be changed by more than ±1.
30. A linkage has 14 links and the number of loops is 5. Calculate its
    (i) degrees of freedom
    (ii) number of joints
    (iii) maximum number of ternary links that can be had.

    Assume that all the pairs are turning pairs.

    (3; 18; 8)

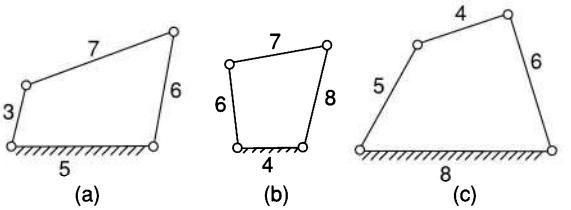

Fig. 1.67

31. Figure 1.67 shows some four-link mechanisms in which the figures indicate the dimensions in standard units of length. Indicate the type of each mechanism, whether it is crank-rocker or double-crank or double-rocker.

    [(a) crank-rocker (b) double-crank (c) double-rocker]
32. A crank-rocker mechanism *ABCD* has the dimensions *AB* = 30 mm, *BC* = 90 mm, *CD* = 75 mm and *AD* (fixed link) = 100 mm. Determine the maximum and the minimum values of the transmission angle. Locate the toggle positions and indicate the corresponding crank angles and the transmission angles.

    (103°, 49°, θ = 228°, μ = 92°, θ =38.5°, μ = 56°)

2 VELOCITY ANALYSIS

Introduction

As mentioned in the first chapter, analysis of mechanisms is the study of motions and forces concerning their different parts. The study of velocity analysis involves the linear velocities of various points on different links of a mechanism as well as the angular velocities of the links. The velocity analysis is the prerequisite for acceleration analysis which further leads to force analysis of various links of a mechanism. To facilitate such study, a machine or a mechanism is represented by a skeleton or a line diagram, commonly knows as a *configuration diagram*.

Velocities and accelerations in machines can be determined either analytically or graphically. With the invention of calculators and computers, it has become convenient to make use of analytical methods. However, a graphical analysis is more direct and is accurate to an acceptable degree and thus cannot be neglected. This chapter is mainly devoted to the study of graphical methods of velocity analysis. Two methods of graphical approach, namely, relative velocity method and instantaneous centre method are discussed. The algebraic methods are also discussed in brief. The analytical approach involving the use of calculators and computers will be discussed in Chapter 4.

2.1 ABSOLUTE AND RELATIVE MOTIONS

Strictly speaking, all motions are relative since an arbitrary set of axes or planes is required to define a motion. Usually, the earth is taken to be a fixed reference plane and all motions relative to it are termed absolute motions.

If a train moves in a particular direction, the motion of the train is referred as the absolute motion of the train or motion of the train relative to the earth. Now, suppose a man moves inside the train. Then, the motion of the man will be described in two different ways with different meanings:

1. Motion of the man relative to the train—it is equivalent to the motion of the man assuming the train to be stationary.
2. Motion of the man or absolute motion of the man or motion of the man relative to the earth = motion of man relative to the train + Motion of train relative to the earth.

2.2 VECTORS

Problems involving relative motions are conveniently solved by the use of vectors. A vector is a line which represents a vector quantity such as force, velocity, acceleration, etc.

Characteristics of a Vector

1. Length of the vector **ab** (Fig. 2.1) drawn to a convenient scale, represents the magnitude of the quantity (written as *ab*).

Direction of the line is parallel to the direction in which the quantity acts.

The initial end **a** of the line is the tail and the final end **b**, the head. An arrowhead on the line indicates the direction-sense of the quantity which is always from the tail to the head, i.e., **a** to **b**.

If the sense is as shown in Fig. 2.1(a), the vector is read as **ab** and if the sense is opposite [Fig. 2.1 (b)], the vector is read as **ba**. This implies that **ab** = – **ba**

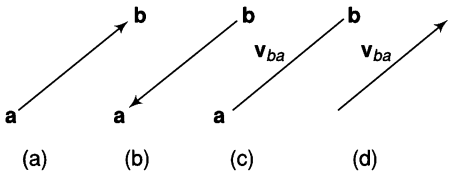

Fig. 2.1

2. Vector **ab** may also represent a vector quantity of a body *B* relative to a body *A* such as velocity of *B* relative to *A*.

   If the body *A* is fixed, **ab** represents the absolute velocity of *B*. If both the bodies *A* and *B* are in motion, the velocity of *B* relative to *A* means the velocity of *B* assuming the body *A* to be fixed for the moment.

   The vector **ab** can also be shown as $\mathbf{v}_{ba}$ [Fig. 2.1(c)], meaning the velocity of *B* relative to *A* provided *a* and *b* are indicated at the ends or an arrowhead is put on the vector [Fig. 2.1(d)].

3. Vector **ab** may also represent a vector quantity of a point *B* relative to a point *A* in the same body.

   If a vector $\mathbf{v}_{ba}$ or **ab** represents the velocity of *B* relative to *A*, the same vector in the opposite sense represents the velocity of *A* relative to *B* and will be read as $\mathbf{v}_{ab}$ or **ba**.

2.3 ADDITION AND SUBTRACTION OF VECTORS

Let

$\mathbf{v}_{ao}$ = velocity of *A* relative to *O*

$\mathbf{v}_{ba}$ = velocity of *B* relative to *A*

$\mathbf{v}_{bo}$ = velocity of *B* relative to *O*

The law of vector addition states that the velocity of *B* relative to *O* is equal to the vectorial sum of the velocity of *B* relative to *A* and the velocity of *A* relative to *O*.

Velocity of *B* relative to *O* = velocity of *B* relative to *A* + velocity of *A* relative to *O* (2.1)

i.e.
$$\mathbf{v}_{bo} = \mathbf{v}_{ba} + \mathbf{v}_{ao}$$
$$= \mathbf{v}_{ao} + \mathbf{v}_{ba}$$

or
$$\mathbf{ob} = \mathbf{oa} + \mathbf{ab}$$

Take the vector **oa** and place the vector **ab** at the end of the vector **oa.** Then **ob** is given by the closing side of the two vectors (Fig. 2.2).

Note that the arrows of the two vectors to be added are in the same order and that of the resultant is in the opposite order.

Any number of vectors can be added as follows:

1. Take the first vector.
2. At the end of the first vector, place the beginning of the second vector.

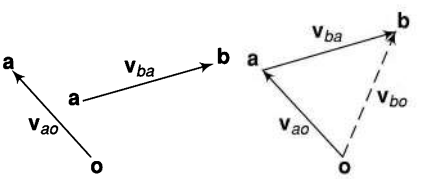

Fig. 2.2

3. At the end of the second vector, place the beginning of the third vector, and so on.
4. Joining of the beginning of the first vector and the end of the last vector represents the sum of the vectors. Figure 2.3 shows the addition of four vectors.

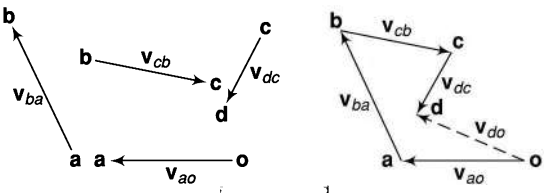

Fig. 2.3

$$\begin{aligned} \mathbf{v}_{do} &= \mathbf{v}_{dc} + \mathbf{v}_{cb} + \mathbf{v}_{ba} + \mathbf{v}_{ao} \\ &= \mathbf{v}_{ao} + \mathbf{v}_{ba} + \mathbf{v}_{cb} + \mathbf{v}_{dc} \\ \mathbf{od} &= \mathbf{oa} + \mathbf{ab} + \mathbf{bc} + \mathbf{cd} \end{aligned} \tag{2.2}$$

Equation 2.1 may be written as,

Vel. of B rel. to A = Vel. of B rel. to O – Vel. of A rel. to O (2.3)

$$\mathbf{v}_{ba} = \mathbf{v}_{bo} - \mathbf{v}_{ao}$$

or $\mathbf{ab} = \mathbf{ob} - \mathbf{oa}$

This shows that in Fig. 2.2, **ab** also represents the subtraction of **oa** from **ob** [Fig. 2.4(a)]

Also $\mathbf{v}_{ab} = -\mathbf{v}_{ba} = \mathbf{v}_{ao} - \mathbf{v}_{bo}$

or $\mathbf{ba} = \mathbf{oa} - \mathbf{ob}$

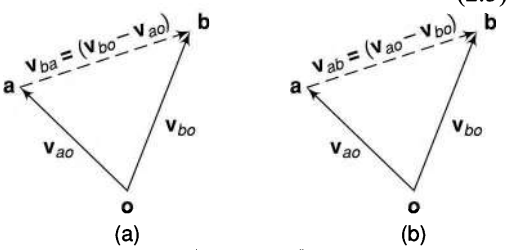

Fig. 2.4

This has been shown in Fig. 2.4 (b).

Thus, the difference of two vectors is given by the closing side of a triangle, the other two sides of which are formed by placing the two vectors tail to tail, the sense being towards the vector quantity from which the other is subtracted.

2.4 MOTION OF A LINK

Let a rigid link OA, of length r, rotate about a fixed point O with a uniform angular velocity ω rad/s in the counter-clockwise direction [Fig.2.5 (a)]. OA turns through a small angle $\delta\theta$ in a small interval of time δt. Then A will travel along the arc AA' as shown in [Fig.2.5(b)].

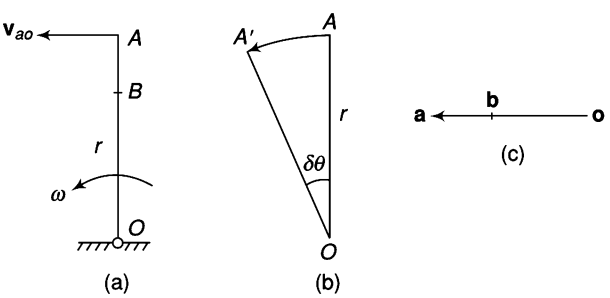

Fig. 2.5

Velocity of A relative to O = $\dfrac{\text{Arc}AA'}{\delta t}$

or

$$\mathbf{v}_{ao} = \frac{r\delta\theta}{\delta t}$$

In the limits, when $\delta t \to 0$

$$\begin{aligned} \mathbf{v}_{ao} &= r\frac{d\theta}{dt} \\ &= r\omega \end{aligned} \tag{2.4}$$

The direction of v_{ao} is along the displacement of A. Also, as δt approaches zero ($\delta t \to 0$), AA' will be perpendicular to OA. Thus, velocity of A is ωr and is perpendicular to OA. This can be represented by a vector **oa** (Fig. 2.5 c). The fact that the direction of the velocity vector is perpendicular to the link also emerges from the fact that A can neither approach nor recede from O and thus, the only possible motion of A relative to O is in a direction perpendicular to OA.

Consider a point B on the link OA.

Velocity of $B = \omega \,.\, OB$ perpendicular to OB.

If **ob** represents the velocity of B, it can be observed that

$$\frac{\mathbf{ob}}{\mathbf{oa}} = \frac{\omega OB}{\omega OA} = \frac{OB}{OA} \tag{2.5}$$

i.e., **b** divides the velocity vector in the same ratio as B divides the link.

Remember, the velocity vector v_{ao} [Fig. 2.5(c)] represents the velocity of A at a particular instant. At other instants, when the link OA assumes another position, the velocity vectors will have their directions changed accordingly.

Also, the magnitude of the instantaneous linear velocity of a point on a rotating body is proportional to its distance from the axis of rotation.

2.5 FOUR-LINK MECHANISM

Figure 2.6(a) shows a four-link mechanism (quadric-cycle mechanism) $ABCD$ in which AD is the fixed link and BC is the coupler. AB is the driver rotating at an angular speed of ω rad/s in the clockwise direction if it is a crank or moving at this angular velocity at this instant if it is a rocker. It is required to find the absolute velocity of C (or velocity of C relative to A).

Writing the velocity vector equation,

Vel. of C rel. to A = Vel. of C rel. to B + vel. of B rel. to A

$$\mathbf{v}_{ca} = \mathbf{v}_{cb} + \mathbf{v}_{ba} \tag{2.6}$$

The velocity of any point relative to any other point on a fixed link is always zero. Thus, all the points on a fixed link are represented by one point in the velocity diagram. In Fig. 2.6(a), the points A and D, both lie on the fixed link AD. Therefore, the velocity of C relative to A is the same as velocity of C relative to D.

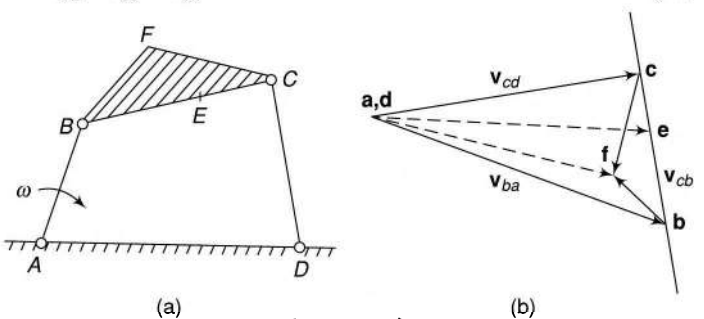

Fig. 2.6

Equation (2.6) may be written as,

$$\mathbf{v}_{cd} = \mathbf{v}_{ba} + \mathbf{v}_{cb}$$

or

$$\mathbf{dc} = \mathbf{ab} + \mathbf{bc}$$

where $\mathbf{v}_{ba}$ or **ab** = ωAB; $\perp$ to AB

$\mathbf{v}_{cb}$ or **bc** is unknown in magnitude ; $\perp$ to BC

$\mathbf{v}_{cd}$ or **dc** is unknown in magnitude ; $\perp$ to DC

The velocity diagram is constructed as follows:

1. Take the first vector **ab** as it is completely known.
2. To add vector **bc** to **ab**, draw a line $\perp$ BC through **b,** of any length. Since the direction-sense of **bc** is unknown, it can lie on either side of **b. A** convenient length of the line can be taken on both sides of **b.**
3. Through **d,** draw a line $\perp$ DC to locate the vector **dc.** The intersection of this line with the line of vector **bc** locates the point **c**.
4. Mark arrowheads on the vectors **bc** and **dc** to give the proper sense. Then **dc** is the magnitude and also represents the direction of the velocity of C relative to A (or D). It is also the absolute velocity of the point C (A and D being fixed points).
5. Remember that the arrowheads on vector **bc** can be put in any direction because both ends of the link BC are movable. If the arrowhead is put from **c** to **b**, then the vector is read as **cb**. The above equation is modified as

$$\mathbf{dc} = \mathbf{ab} - \mathbf{cb} \qquad (\mathbf{bc} = -\mathbf{cb})$$

or

$$\mathbf{dc} + \mathbf{cb} = \mathbf{ab}$$

Intermediate Point

The velocity of an intermediate point on any of the links can be found easily by dividing the corresponding velocity vector in the same ratio as the point divides the link. For point E on the link BC,

$$\frac{\mathbf{be}}{\mathbf{bc}} = \frac{BE}{BC}$$

ae represents the absolute velocity of E.

Offset Point

Write the vector equation for point F,

$$\mathbf{v}_{fb} + \mathbf{v}_{ba} = \mathbf{v}_{fc} + \mathbf{v}_{cd}$$

or

$$\mathbf{v}_{ba} + \mathbf{v}_{fb} = \mathbf{v}_{cd} + \mathbf{v}_{fc}$$

or

$$\mathbf{ab} + \mathbf{bf} = \mathbf{dc} + \mathbf{cf}$$

The vectors $\mathbf{v}_{ba}$ and $\mathbf{v}_{cd}$ are already there on the velocity diagram.

$\mathbf{v}_{fb}$ is $\perp$ BF, draw a line $\perp$ BF through **b;**

$\mathbf{v}_{fc}$ is $\perp$ CF, draw a line $\perp$ CF through **c;**

The intersection of the two lines locates the point **f.**

af or **df** indicates the velocity of F relative to A (or D) or the absolute velocity of F.

2.6 VELOCITY IMAGES

Note that in Fig. 2.6, the triangle **bfc** is similar to the triangle BFC in which all the three sides **bc**, **cf** and **fb** are perpendicular to BC, CF and FB respectively. The triangles such as **bcf** are known as velocity images and are found to be very helpful devices in the velocity analysis of complicated shapes of the linkages. Thus, any

offset point on a link in the configuration diagram can easily be located in the velocity diagram by drawing the velocity image. While drawing the velocity images, the following points should be kept in mind:

1. The velocity image of a link is a scaled reproduction of the shape of the link in the velocity diagram from the configuration diagram, rotated bodily through 90° in the direction of the angular velocity.
2. The order of the letters in the velocity image is the same as in the configuration diagram.
3. In general, the ratio of the sizes of different images to the sizes of their respective links is different in the same mechanism.

2.7 ANGULAR VELOCITY OF LINKS

1. Angular Velocity of BC

(a) Velocity of C relative to B, $v_{cb} = \mathbf{bc}$ (Fig. 2.6)

Point C relative to B moves in the direction-sense given by $\mathbf{v}_{cb}$ (upwards). Thus, C moves in the counter-clockwise direction about B.

$$\mathbf{v}_{cb} = \omega_{cb} \times BC = \omega_{cb} \times CB$$

$$\omega_{cb} = \frac{v_{cb}}{CB}$$

(b) Velocity of B relative to C, $\mathbf{v}_{bc} = \mathbf{cb}$

B relative to C moves in a direction-sense given by v_{bc} (downwards, opposite to **bc**), i.e., B moves in the counter-clockwise direction about C with magnitude ω_{bc} given by

$$\frac{v_{bc}}{BC}$$

It can be seen that the magnitude of $\omega_{cb} = \omega_{bc}$ as $v_{cb} = v_{bc}$ and the direction of rotation is the same. Therefore, angular velocity of a link about one extremity is the same as the angular velocity about the other. In general, the angular velocity of link BC is ω_{bc} (= ω_{cb}) in the counter-clockwise direction.

2. Angular Velocity of CD

Velocity of C relative to D,

$$v_{cd} = \mathbf{dc}$$

It is seen that C relative to D moves in a direction-sense given by v_{cd} or C moves in the clockwise direction about D.

$$\omega_{cd} = \frac{v_{cd}}{CD}$$

2.8 VELOCITY OF RUBBING

Figure 2.7 shows two ends of the two links of a turning pair. A pin is fixed to one of the links whereas a hole is provided in the other to fit the pin. When joined, the surface of the hole of one link will rub on the surface of the pin of the other link. The velocity of rubbing of the two surfaces will depend upon the angular velocity of a link relative to the other.

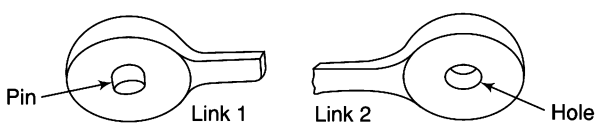

Fig. 2.7

Pin at A (Fig. 2.6a)

The pin at A joins links AD and AB. AD being fixed, the velocity of rubbing will depend upon the angular velocity of AB only.

Let r_a = radius of the pin at A

Then velocity of rubbing = $r_a . \omega$

Pin at D

Let r_d = radius of the pin at D

Velocity of rubbing = $r_d . \omega_{cd}$

Pin at B

$\omega_{ba} = \omega_{ab} = \omega$ clockwise

$\omega_{bc} = \omega_{cb} = \dfrac{v_{bc}}{BC}$ counter-clockwise

Since the directions of the two angular velocities of links AB and BC are in the opposite directions, the angular velocity of one link relative to the other is the sum of the two velocities.

Let r_b = radius of the pin at B

Velocity of rubbing = $r_b (\omega_{ab} + \omega_{bc})$

Pin at C

$\omega_{bc} = \omega_{cb}$ counter-clockwise

$\omega_{dc} = \omega_{cd}$ clockwise

Let r_c = radius of the pin at C

Velocity of rubbing = $r_c (\omega_{bc} + \omega_{dc})$

In case it is found that the angular velocities of the two links joined together are in the same direction, the velocity of rubbing will be the difference of the angular velocities multiplied by the radius of the pin.

2.9 SLIDER-CRANK MECHANISM

Figure 2.8(a) shows a slider-crank mechanism in which OA is the crank moving with uniform angular velocity ω rad/s in the clockwise direction. At point B, a slider moves on the fixed guide G. AB is the coupler joining A and B. It is required to find the velocity of the slider at B.

Writing the velocity vector equation,

Vel. of B rel. to O = Vel. of B rel. to A + Vel. of A rel. to O

$$v_{bo} = v_{ba} + v_{ao}$$

$$v_{bg} = v_{ao} + v_{ba}$$

or **gb = oa + ab**

$\mathbf{v}_{bo}$ is replaced by v_{bg} as O and G are two points on a fixed link

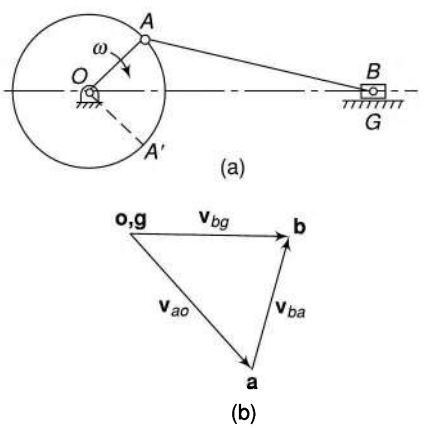

Fig. 2.8

with zero relative velocity between them.

Take the vector $\mathbf{v}_{ao}$ which is completely known.

$\mathbf{v}_{ao} = \omega . OA$; $\perp$ to OA

$\mathbf{v}_{ba}$ is $\perp$ *AB,* draw a line $\perp AB$ through **a**;

Through **g** (or **a**), draw a line parallel to the motion of *B* (to locate the vector $\mathbf{v}_{bg}$).

The intersection of the two lines locates the point **b**.

gb (or **ob**) indicates the velocity of the slider *B* relative to the guide *G*. This is also the absolute velocity of the slider (*G* is fixed). The slider moves towards the right as indicated by **gb.** When the crank assumes the position *OA′* while rotating, it will be found that the vector **gb** lies on the left of **g** indicating that *B* moves towards left.

For the given configuration, the coupler *AB* has angular velocity in the counter-clockwise direction, the magnitude being $\dfrac{v_{ba}}{BA(\text{or } AB)}$

Example 2.1 *In a four-link mechanism, the dimensions of the links are as under:*
AB = 50 mm, BC = 66 mm, CD = 56 mm and AD = 100 mm

At the instant when ∠DAB = 60°, the link AB has an angular velocity of 10.5 rad/s in the counter-clockwise direction. Determine the

(i) velocity of the point C
(ii) velocity of the point E on the link BC when BE = 40 mm
(iii) angular velocities of the links BC and CD
(iv) velocity of an offset point F on the link BC if BF = 45 mm, CF = 30 mm and BCF is read clockwise
(v) velocity of an offset point G on the link CD if CG = 24 mm, DG = 44 mm and DCG is read clockwise
(vi) velocity of rubbing at pins A, B, C and D when the radii of the pins are 30, 40, 25 and 35 mm respectively.

Solution The configuration diagram has been shown in Fig. 2.9(a) to a convenient scale.

Writing the vector equation,

Vel. of *C* rel. to *A* = Vel. of *C* rel. to *B* + Vel. of *B* rel. to *A*

$$\mathbf{v}_{ca} = \mathbf{v}_{cb} + \mathbf{v}_{ba}$$

or $$\mathbf{v}_{cd} = \mathbf{v}_{ba} + \mathbf{v}_{cb}$$

or $$\mathbf{dc} = \mathbf{ab} + \mathbf{bc}$$

We have,

$$\mathbf{v}_{ba} = \omega_{ba} \times BA = 10.5 \times 0.05 = 0.525 \text{ m/s}$$

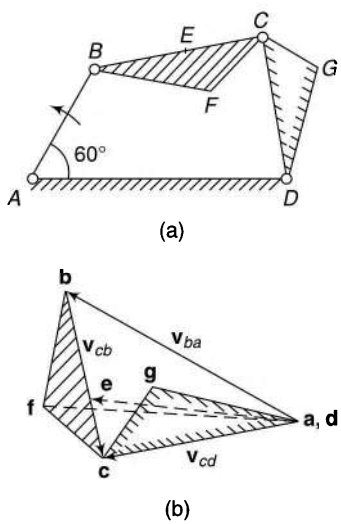

Fig. 2.9

Take the vector $\mathbf{v}_{ba}$ to a convenient scale in the proper direction and sense [Fig. 2.9(b)].

$\mathbf{v}_{cb}$ is $\perp BC$, draw a line $\perp BC$ through **b;**

$\mathbf{v}_{cd}$ is $\perp DC$, draw a line $\perp DC$ through **d;**

The intersection of the two lines locates the point **c.**

Note In the velocity diagram shown in Fig. 2.9(b), arrowhead has been put on the line joining points b and c in such a way that it represents the vector for velocity of *C* relative to *B*. This satisfies the above equation. As the same equation

$$\mathbf{v}_{cd} = \mathbf{v}_{ba} + \mathbf{v}_{cb}$$

can also be put as

$$\mathbf{v}_{cd} + \mathbf{v}_{bc} = \mathbf{v}_{ba}$$
$$\mathbf{dc} + \mathbf{cb} = \mathbf{ab}$$

This shows that on the same line joining **b** and **c**, the arrowhead should be marked in the other direction so that it represents the vector of velocity of B relative to C to satisfy the latter equation.

Thus, it implies that in case both the ends of a link are in motion, the arrowhead may be put in either direction or no arrowhead is put at all. This is because every time it is not necessary to write the velocity equation. The velocity equation is helpful only at the initial stage for better comprehension.]

(i) v_c = **ac** (or **dc**) = 0.39 m/s

(ii) Locate the point **e** on **bc** such tha $\frac{be}{bc} = \frac{BE}{BC}$

bc = 0.34 m/s from the velocity diagram.

be = $0.34 \times \frac{0.040}{0.066}$ = 0.206 m/s

Therefore, v_e = **ae** (or **de**) = 0.415 m/s

(iii) $\omega_{cb} = \frac{v_{cb}}{CB} = \frac{0.340}{0.066}$ = 5.15 rad/s clockwise

$\omega_{cd} = \frac{v_{cd}}{CD} = \frac{0.390}{0.056}$ = 6.96 rad/s counter-clockwise

(iv) $\mathbf{v}_{fb}$ is $\perp BF$, draw a line $\perp BF$ through **b;**
$\mathbf{v}_{fc}$ is $\perp CF$, draw a line $\perp CF$ through **c;**
The intersection locates the point **f.**
v_f (i.e., v_{fa} or v_{fd}) = **af** = 0.495 m/s

The point **f** can also be located by drawing the velocity image **bcf** of the triangle BCF as discussed earlier.

(v) $\mathbf{v}_{gd}$ is $\perp DG$, draw **dg** $\perp DG$ through **d;**
$\mathbf{v}_{gc}$ is $\perp CG$, draw **cg** $\perp CG$ through **c.**
The intersection locates the point **g.**
v_g = **dg** = 0.305 m/s

However, the velocity of G could be found directly since G is a point on the link DC which rotates about a fixed point D and the velocity of C is already known.

$$\frac{v_g}{v_c} = \frac{DG}{DC}$$

or

$$v_g = 0.390 \times \frac{0.044}{0.056} = 0.306 \text{ m/s}$$

The point **g** can also be located by drawing the velocity image **dcg** of the triangle dCG.

(vi) (a) ω_{ba} (or ω_{ab}) is counter-clockwise and ω_{cb} (or ω_{bc}) is clockwise,

Velocity of rubbing at pin $B = (\omega_{ab} + \omega_{cb})r_b$
$= (10.5 + 5.15) \times 0.040$
$= 0.626$ m/s

(b) ω_{dc} is counter-clockwise and ω_{bc} is clockwise,

Velocity of rubbing at the pin C
$= (\omega_{dc} + \omega_{bc})r_c$
$= (6.96 + 5.15) \times 0.025$
$= 0.303$ m/s

(c) Velocity of rubbing at the pin A
$= \omega_{ba}\, r_a = 10.5 \times 0.03 = 0.315$ m/s

(d) Velocity of rubbing at the pin D
$= \omega_{cd}\, r_d = 6.96 \times 0.035 = 0.244$ m/s

Example 2.2 *In a slider-crank mechanism, the crank is 480 mm long and rotates at 20 rad/s in the counter-clockwise direction The length of the connecting rod is 1.6 m. When the crank turns 60° from the inner-dead centre, determine the*

(i) velocity of the slider

(ii) velocity of a point E located at a distance 450 mm on the connecting rod extended

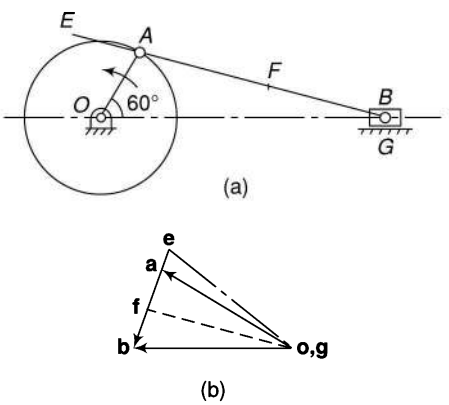

Fig. 2.10

(iii) position and velocity of a point F on the connecting rod having the least absolute velocity

(iv) angular velocity of the connecting rod

(v) velocities of rubbing at the pins of the crankshaft, crank and the cross-head having diameters 80, 60 and 100 mm respectively.

Solution Figure 2.10(a) shows the configuration diagram to a convenient scale.

$v_{ao} = \omega_{ao} \times OA = 20 \times 0.48 = 9.6$ m/s

The vector equation is $\mathbf{v}_{bo} = \mathbf{v}_{ba} + \mathbf{v}_{ao}$

or

$$\mathbf{v}_{bg} = \mathbf{v}_{ba} + \mathbf{v}_{ao}$$

or

$$\mathbf{v}_{bg} = \mathbf{v}_{ao} + \mathbf{v}_{ba}$$

or

$$\mathbf{gb} = \mathbf{oa} + \mathbf{ab}$$

Take the vector $\mathbf{v}_{ao}$ to a convenient scale in the proper direction and sense [Fig. 2.10 (b)].

$\mathbf{v}_{ba}$ is $\perp AB$, draw a line $\perp AB$ through **a;**

The slider B has a linear motion relative to the guide G. Draw a line parallel to the direction of motion of the slider through **g** (or **o**). Thus, the point **b** is located.

(i) Velocity of the slider, $v_b = \mathbf{ob} = 9.7$ m/s

(ii) Locate the point **e** on **ba** extended such that

$$\frac{\mathbf{ae}}{\mathbf{ba}} = \frac{AE}{BA}$$

ba = 5.25 m/s on measuring from the diagram.

$$\therefore \mathbf{ae} = 5.25 \times \frac{0.45}{1.60} = 1.48 \text{ m/s}$$

$v_e = \mathbf{oe} = \underline{10.2 \text{ m/s}}$

(iii) To locate a point F on the connecting rod which has the least velocity relative to the crankshaft or has the least absolute velocity, draw **of** $\perp$ **ab** through **o.**

Locate the point F on AB such the $\dfrac{AF}{AB} = \dfrac{\mathbf{af}}{\mathbf{ab}}$

or

$$AF = 1.60 \times \frac{2.76}{5.25} = 0.84 \text{ m}$$

$v_f = \mathbf{of} = \underline{9.4 \text{ m/s}}$

(iv) $\omega_{ba} = \dfrac{v_{ba}}{AB} = \dfrac{5.25}{1.60} = 3.28$ rad/s clockwise

(v) (a) Velocity of rubbing at the pin of the crankshaft (at O)

$= \omega_{ao} r_o = 20 \times 0.04 = 0.8$ m/s

$$\left(r_o \frac{80}{2} = 40 \text{ mm} \right)$$

(b) ω_{oa} is counter-clockwise and ω_{ba} is clockwise.

Velocity of rubbing at the crank pin $A = (\omega_{oa} + \omega_{ba})\, r_a$

$= (20 + 3.28) \times 0.03$

$= 0.698$ m/s

(c) At the cross-head, the slider does not rotate and only the connecting rod has the angular motion.

Velocity of rubbing at the cross-head pin at B

$= \omega_{ab}\, r_b = 3.28 \times 0.05 = \underline{0.164 \text{ m/s}}$

Example 2.3 *Figure 2.11a shows a mechanism in which OA = QC = 100 mm, AB = QB = 300 mm and CD = 250 mm. The crank OA rotates at 150 rpm in the clockwise direction. Determine the*

(i) velocity of the slider at D

(ii) angular velocities of links QB and AB

(iii) rubbing velocity at the pin B which is 40 mm in diameter

Solution $\omega_{ao} = \dfrac{2\pi \times 150}{60} = 15.7$ rad/s

$v_{ao} = \omega_{ao} \times OA = 15.7 \times 0.1 = 1.57$ m/s

The vector equation for the mechanism $OABQ$,

$$\mathbf{v}_{bo} = \mathbf{v}_{ba} + \mathbf{v}_{ao}$$

or $\mathbf{v}_{bq} = \mathbf{v}_{ao} + \mathbf{v}_{ba}$ or $\mathbf{qb} = \mathbf{oa} + \mathbf{ab}$

Take the vector $\mathbf{v}_{ao}$ to a convenient scale in the proper direction and sense [Fig. 2.11 (b)].

$\mathbf{v}_{ba}$ is $\perp AB$, draw a line $\perp AB$ through **a;**

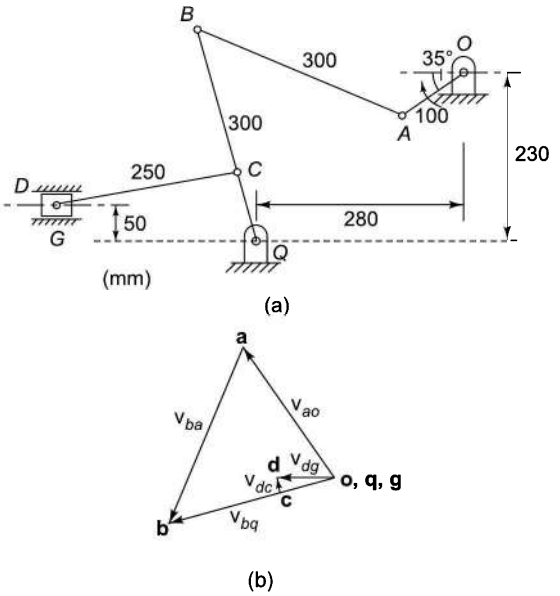

Fig. 2.11

$\mathbf{v}_{bq}$ is $\perp QB$, draw a line $\perp QB$ through **q;**

The intersection of the two lines locates the point **b.**

Locate the point **c** on **qb** such that

$$\frac{\mathbf{qc}}{\mathbf{qb}} = \frac{100}{300} = 0.3$$

The vector equation for the mechanism *QCD*,

$$\mathbf{v}_{dq} = \mathbf{v}_{dc} + \mathbf{v}_{cq} \quad \text{or} \quad \mathbf{v}_{dg} = \mathbf{v}_{cq} + \mathbf{v}_{dc}$$

or $\quad \mathbf{gd} = \mathbf{qc} + \mathbf{cd}$

$\mathbf{v}_{dc}$ is $\perp DC$, draw a line $\perp DC$ through **c;**

For $\mathbf{v}_{dg}$, draw a line through **g,** parallel to the line of stroke of the slider in the guide *G*.

The intersection of the two lines locates the point **d.**

(i) The velocity of slider at *D*, v_d = **gd** = 0.56 m/s

(vi) $\omega_{bq} = \dfrac{v_{bq}}{QB} = \dfrac{1.69}{0.3} = 5.63$ rad/s counter-clockwise

(vii) $\omega_{ba} = \dfrac{v_{ba}}{AB} = \dfrac{1.89}{0.3} = 6.3$ rad/s counter-clockwise

As both the links connected at *B* have counter-clockwise angular velocities,

velocity of rubbing at the crank pin

$B = (\omega_{ba} - \omega_{bq})\, r_b$

$= (6.3 - 5.63) \times 0.04 = 0.0268$ m/s

Example 2.4 *An engine crankshaft drives a reciprocating pump through a mechanism as shown in Fig. 2.12(a). The crank rotates in the clockwise direction at 160 rpm. The diameter of the pump piston at F is 200 mm. Dimensions of the various links are*

OA = 170 mm (crank) *CD = 170 mm*

AB = 660 mm *DE = 830 mm*

BC = 510 mm

For the position of the crank shown in the diagram, determine the

(i) velocity of the crosshead E

(ii) velocity of rubbing at the pins A, B, C and D, the diameters being 40, 30, 30 and 50 mm respectively

(iii) torque required at the shaft O to overcome a pressure of 300 kN/m² at the pump piston at F

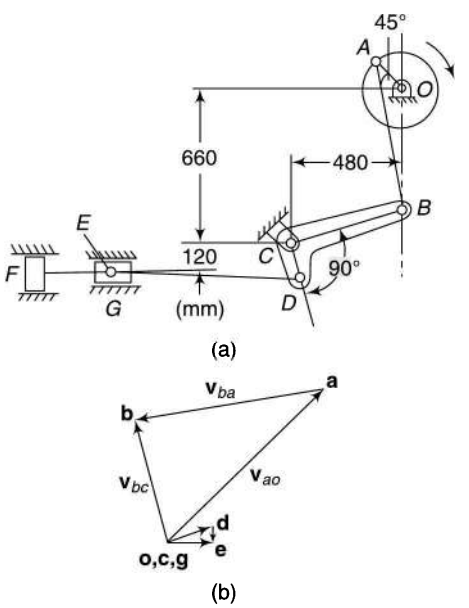

Fig. 2.12

Solution:

$$\omega_{ao} = \frac{2\pi N}{60} = \frac{2\pi \times 160}{60} = 16.76 \text{ rad/s}$$

$$v_{ao} = \omega_{ao} \times OA = 16.76 \times 0.17 = 2.85 \text{ m/s}$$

Writing the vector equation for the mechanism *OABC*,

$$\mathbf{v}_{bo} = \mathbf{v}_{ba} + \mathbf{v}_{ao}$$

or

$$\mathbf{v}_{bc} = \mathbf{v}_{ao} + \mathbf{v}_{ba}$$

or

$$\mathbf{cb} = \mathbf{oa} + \mathbf{ab}$$

Take the vector $\mathbf{v}_{ao}$ to a convenient scale [Fig. 2.12(b)]

$\mathbf{v}_{ba}$ is $\perp AB$, draw a line $\perp AB$ through **a;**

$\mathbf{v}_{bc}$ is $\perp BC$, draw a line $\perp BC$ through **c.**

The intersection of the two lines locates the point ***b***. Velocity of *B* relative to *C* is upwards for the given configuration. Therefore, the link *BCD* moves counter-clockwise about the pivot *C*.

$$\frac{v_{dc}}{v_{bc}} = \frac{DC}{BC}$$

or $v_{dc} = 1.71 \times \dfrac{0.17}{0.51} = 0.57$ m/s $\qquad (\perp DC)$

Writing the vector equation for the mechanism *CDE*,

$$\mathbf{v}_{ec} = \mathbf{v}_{ed} + \mathbf{v}_{dc}$$

or

$$\mathbf{v}_{eg} = \mathbf{v}_{dc} + \mathbf{v}_{ed}$$

or

$$\mathbf{ge} = \mathbf{cd} + \mathbf{de}$$

Take $\mathbf{v}_{dc}$ in the proper direction and sense from **c** assuming *D* in the configuration diagram as an offset point on link *CB;*

$\mathbf{v}_{ed}$ is $\perp DE$, draw a line $\perp DE$ through **d**.

For $\mathbf{v}_{eg}$, draw a line through **g,** parallel to the direction of motion of the slider *E* in the guide *G*.

This way the point **e** is located.

(i) The velocity of the crosshead,

$v_e = \mathbf{oe} = \underline{0.54 \text{ m/s}}$

(ii) (a) ω_{oa} and ω_{ba} both are clockwise.

$$\omega_{ba} = \frac{\mathbf{ab}}{AB} = \frac{2.49}{0.66} = 3.77 \text{ rad/s}$$

Velocity of rubbing at the pin $A = (\omega_{oa} - \omega_{ba})\, r_a$

$$= (16.76 - 3.77) \times \frac{0.04}{2}$$

$$= \underline{0.26 \text{ m/s}}$$

(b) ω_{ab} is clockwise and ω_{cd} is counter-clockwise.

$$\omega_{cb} = \frac{v_{cb}}{CB} = \frac{1.71}{0.51} = 3.35 \text{ rad/s}$$

Velocity of rubbing at $B = (\omega_{ab} + \omega_{cb})\, r_b$

$$= (3.77 + 3.35) \times 0.015 \;\ldots\; (\omega_{ab} = \omega_{ba})$$

$$= \underline{0.107 \text{ m/s}}$$

(c) Velocity of rubbing at $C = \omega_{bc} \cdot r_c$

$$= 3.35 \times \frac{0.03}{2} = \underline{0.05 \text{ m/s}}$$

(d) ω_{cd} and ω_{ed}, both are counter-clockwise

$\omega_{cd} = \omega_{bc} = 3.35$ rad/s … (*BCD* is one link)

$$= \omega_{ed} = \frac{v_{ed}}{ED} = \frac{0.15}{0.83} = 0.18 \text{ rad/s}$$

Velocity of rubbing at $D = (\omega_{cd} - \omega_{ed})\, r_d$

$$= (3.35 - 0.18) \times \frac{0.05}{2}$$

$$= \underline{0.079 \text{ m/s}}$$

(iii) Work input = work output

$T.\omega = F.v$

where T = torque on the crankshaft

ω = angular velocity of the crank

F = force on the piston

v = velocity of the piston $= v_f = v_e$

Thus, neglecting losses,

$$T = \frac{F.v}{\omega} = \frac{\pi}{4}(0.02)^2 \times 300 \times 10^3 \times \frac{0.54}{16.76}$$

$$= \underline{303.66 \text{ N.m}}$$

Example 2.5 *Figure 2.13(a) shows a mechanism in which OA = 300 mm, AB = 600 mm, AC = BD = 1.2 m. OD is horizontal for the given configuration. If OA rotates at 200 rpm in the clockwise direction, find*

(iv) linear velocities of C and D

(v) angular velocities of links AC and BD

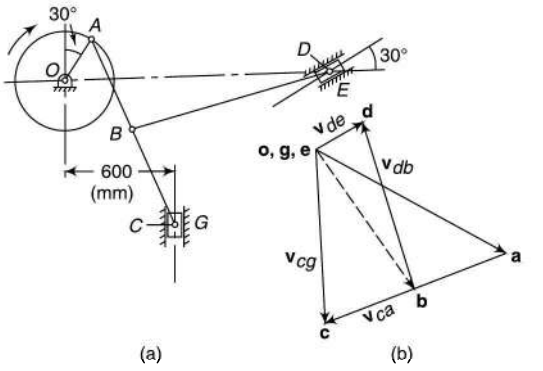

Fig. 2.13

Solution: $\omega_a = \dfrac{2\pi \times 200}{60} = 20.94$ rad/s

$$v_a = \omega_a OA = 20.94 \times 0.3 = 6.28 \text{ m/s}$$

Writing the vector equation for the mechanism *OAC*,

$$\mathbf{v}_{co} = \mathbf{v}_{ca} + \mathbf{v}_{ao}$$

or

$$\mathbf{v}_{cg} = \mathbf{v}_{ao} + \mathbf{v}_{ca}$$

or

$$\mathbf{gc} = \mathbf{oa} + \mathbf{ac}$$

Take the vector $\mathbf{v}_{ao}$ to a convenient scale [Fig. 2.13(b)].

$\mathbf{v}_{ca}$ is $\perp AC$, draw a line $\perp AC$ through **a**;

$\mathbf{v}_{cg}$ is vertical, draw a vertical line through **g** (or **o**).

The intersection of the two lines locates the point **c**. Locate the point **b** on **ac** as usual. Join **ob** which gives $\mathbf{v}_{bo}$. Writing the vector equation for the mechanism *OABD*,

$$\mathbf{v}_{do} = \mathbf{v}_{db} + \mathbf{v}_{bo}$$

or

$$\mathbf{v}_{de} = \mathbf{v}_{bo} + \mathbf{v}_{db}$$

or

$$\mathbf{ed} = \mathbf{ob} + \mathbf{bd}$$

$\mathbf{v}_{db}$ is $\perp BD$, draw a line $\perp BD$ through **b;**

For $\mathbf{v}_{de}$, draw a line through **e**, parallel to the line of stroke of the piston in the guide *E*.

The intersection locates the point **d**.

$v_c = \mathbf{oc} = \underline{5.2 \text{ m/s}}$

$v_d = \mathbf{od} = \underline{1.55 \text{ m/s}}$

$$\omega_{ac} = \omega_{ca} = \frac{v_{ca}}{AC} = \frac{5.7}{1.20} = \underline{4.75 \text{ rad/s}} \text{ clockwise}$$

$$\omega_{bd} = \omega_{db} = \frac{v_{db}}{BD} = \frac{5.17}{1.20} = \underline{4.31 \text{ rad/s}} \text{ clockwise}$$

Example 2.6 *For the position of the mechanism shown in Fig. 2.14(a), find the velocity of the slider B for the given configuration if the velocity of the slider A is 3 m/s.*

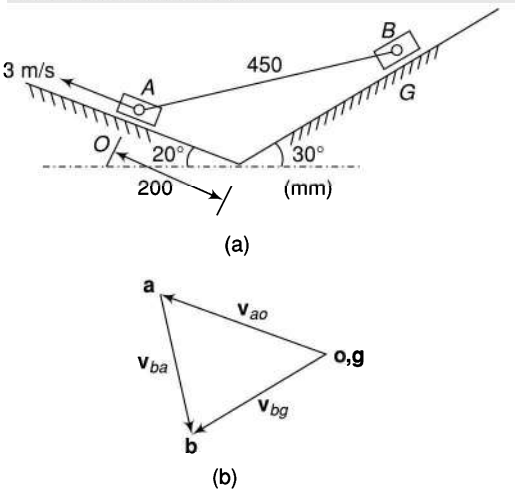

Fig. 2.14

Solution The velocity vector equation is

$$\mathbf{v}_{bo} = \mathbf{v}_{ba} + \mathbf{v}_{ao}$$

or

$$\mathbf{v}_{bg} = \mathbf{v}_{ao} + \mathbf{v}_{ba}$$

or

$$\mathbf{gb} = \mathbf{oa} + \mathbf{ab}$$

Take the vector $\mathbf{v}_{ao}$ (= 3 m/s) to a convenient scale [Fig. 2.14(b)]

$\mathbf{v}_{ba}$ is $\perp AB$, draw a line AB through **a**;

For $\mathbf{v}_{bg}$, draw a line through **g** parallel to the line of stroke of the slider B on the guide G.

The intersection of the two lines locates the point **b**.

Velocity of B = **gb** = 2.67 m/s.

Example 2.7 *In a mechanism shown in Fig. 2.15(a), the angular velocity of the crank OA is 15 rad/s and the slider at E is constrained to move at 2.5 m/s. The motion of both the sliders is vertical and the link BC is horizontal in the position shown. Determine the*

(i) rubbing velocity at B if the pin diameter is 15 mm

(ii) velocity of slider D.

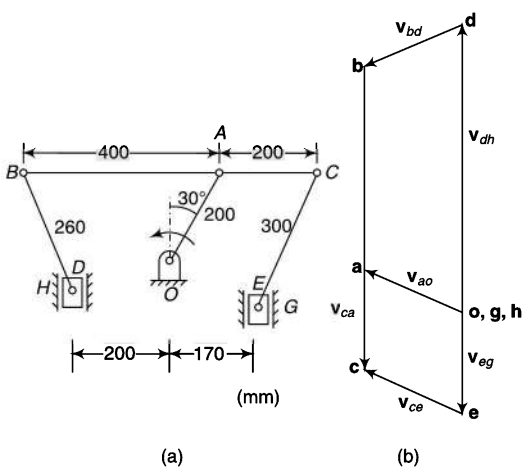

Fig. 2.15

Solution $v_a = \omega_a OA = 15 \times 0.2 = 3$ m/s

Draw the velocity diagram as follows:

- Take vector **oa** to a suitable scale (2.15b).
- Consider two points G and H on the guides of sliders E and F respectively. In the velocity diagram, the points **g** and **h** coincide with **o**. Through **g**, take a vector **ge** parallel to direction of motion of the slider E and equal to 2.5 m/s using some scale.
- Through **e** draw a line $\perp EC$ and through **a**, a line $\perp AC$, the intersection of these two lines locates the point **c**.
- Locate the point **b** on the vector **ca** so that **ca/cb** = CA/CB.
- Through **b,** draw a line $\perp BD$ and through **h**, a line parallel to direction of motion of the slider D, the intersection of these two lines locates the point **d**.

(i) Angular velocity of link BD = **bd**/BD = 2.95/0.26 =11.3 rad/s (counter-clockwise)
Angular velocity of link BC = **bc**/BC = 8.4/0.6 =14 rad/s (clockwise)
Thus velocity of rubbing at

$$B = (\omega_{bd} + \omega_{bc})r_b$$
$$= (11.3 + 14) \times 0.015$$
$$= \underline{0.38 \text{ m/s}}$$

(ii) The velocity of the slider D = **hd** = <u>8.3 m/s</u>

Example 2.8 *The lengths of various links of a mechanism shown in Fig. 2.16(a) are as follows:*

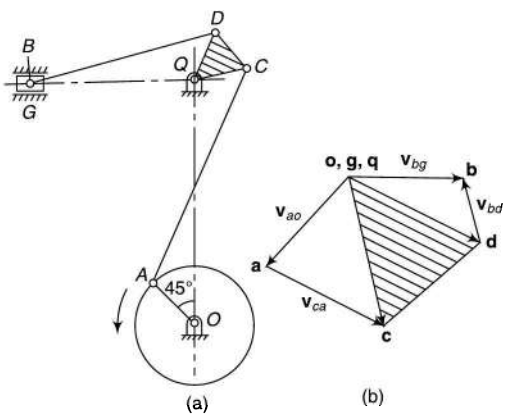

Fig. 2.16

OA = 150 mm	*CD = 125 mm*
AC = 600 mm	*BD = 500 mm*
CQ = QD = 145 mm	*OQ = 625 mm*

The crank OA rotates at 60 rpm in the counter-clockwise direction. Determine the velocity of the slider B and the angular velocity of the link BD when the crank has turned an angle of 45° with the vertical.

Solution

$$v_a = \frac{2\pi N}{60} \times OA = \frac{2\pi \times 60}{60} \times 0.15 = 0.94 \text{ m/s}$$

Take the vector $\mathbf{v}_a$, to a convenient scale [Fig. 2.16(b)] and complete the velocity diagram for the mechanism *OACQ*.

Now *CQD* is one link. Make Δ **cqd** similar to Δ *CQD* such that **cqd** reads clockwise as *CQD* is clockwise. This locates the point **d**. Complete the velocity diagram for the mechanism *QDB*.

v_b = **ob** = 0.9 m/s

$$\omega_{bd} = \frac{v_{bd}}{BD} = \frac{0.49}{0.50} = 0.98 \text{ rad/s clockwise}$$

Example 2.9 *The configuration diagram of a wrapping machine is given in Fig. 2.17(a). The crank OA rotates at 6 rad/s clockwise. Determine the*

(i) velocity of the point P on the bell-crank lever DCP

(ii) angular velocity of the bell-crank lever DCP

(iii) velocity of rubbing at B if the pin diameter is 20 mm

Solution

$$v_a = 6 \times 0.15 = 0.9 \text{ m/s}$$

Take the vector $\mathbf{v}_a$, to a convenient scale [Fig. 2.17(b)] and complete the velocity diagram for the mechanism *OABQ*.

Now locate point **e** on the vector **ab**.

$\mathbf{v}_{de}$ is ⊥ *DE*, draw **de** ⊥ *DE* through **e;**

$\mathbf{v}_{dc}$ is ⊥ *CD*, draw **cd** ⊥ *CD* through **c.**

The intersection locates the point **d.**

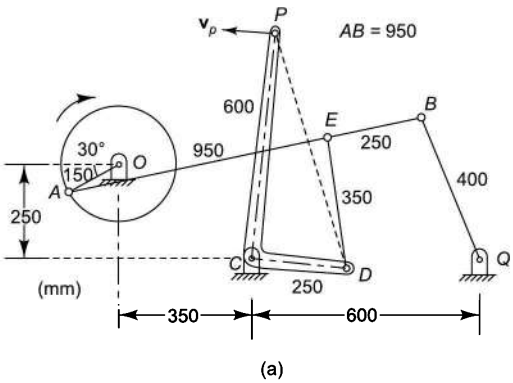

Fig. 2.17

Now, *DCP* is one link. Make Δ**dcp** similar to Δ*DCP* such that **dcp** reads clockwise as *DCP* is clockwise. This locates the point **p**. Then

(i) v_p = **cp** = 0.44 m/s

(ii) $$\omega_{cd} = \frac{v_{cd}}{CD} = \frac{0.182}{0.25} = 0.73 \text{ rad/s}$$

counter clockwise

(iii) $$\omega_{ab} = \frac{v_{ab}}{AB} = \frac{0.91}{0.95} = 0.96 \text{ rad/s clockwise}$$

$$\omega_{qb} = \frac{v_{qb}}{QB} = \frac{0.28}{0.4} = 0.7 \text{ rad/s}$$

counter-clockwise

Thus, velocity of rubbing at $B = (\omega_{ab} + \omega_{bq})r_b$

$= (0.96 + 0.7) \times 0.02 = 0.0332$ m/s

Example 2.10 *Figure 2.18(a) shows an Andrew variable-stroke-engine mechanism. The lengths of the cranks OA and QB are 90 mm and 45 mm respectively. The diameters of wheels with centres O and Q are 250 mm and 120 mm respectively. Other lengths are shown in the diagram in mm. There is a rolling contact between the two wheels. If OA rotates at 100 rpm, determine the*

(i) velocity of the slider D
(ii) angular velocities of links BC and CD
(iii) torque at QB when force required at D is 3 kN

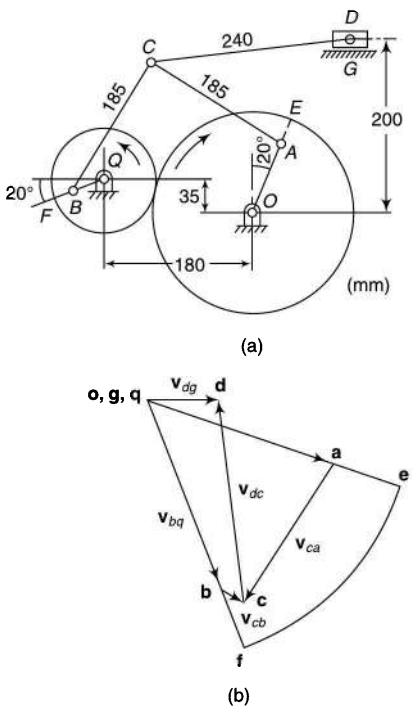

Fig. 2.18

Solution

$$v_a = \frac{2\pi N}{60} = \frac{2\pi \times 100}{60} \times 0.09 = 0.943 \text{ m/s}$$

$$v_e = v_a \frac{OE}{OA} = 0.943 \times \frac{0.125}{0.09} = 1.309 \text{ m/s}$$

$$v_f = v_e = 1.309 \text{ m/s}$$

$$v_b = v_f . \frac{QB}{QF} = 1.309 \times \frac{0.045}{0.06} = 0.982 \text{ m/s}$$

v_b can also be obtained graphically as follows:

Take vector $\mathbf{v}_a$ to a convenient scale [Fig. 2.18(b)]. Produce **oa** to **e** such that **oe/oa** = *OE/OA*. Rotate **oe** to **of** so that **of** is perpendicular to *QF*. Mark the point **b** on **qf** such that **qb/qf** = *QB/Qf*.

Now, $\mathbf{v}_{co} = \mathbf{v}_{cq}$

$$\mathbf{v}_{ca} + \mathbf{v}_{ao} = \mathbf{v}_{cb} + \mathbf{v}_{bq}$$

or

$$\mathbf{v}_{ao} + \mathbf{v}_{ca} = \mathbf{v}_{bq} + \mathbf{v}_{cb}$$

or

oa + ac = qb + bc

$\mathbf{v}_{ao}$ and $\mathbf{v}_{bq}$ are already there in the velocity diagram.

$\mathbf{v}_{ca}$ is $\perp AC$, draw a line $\perp AC$ through **a**;

$\mathbf{v}_{cb}$ is $\perp BC$, draw a line $\perp BC$ through **b**;

Thus, the point **c** is located.

Further, $\mathbf{v}_{do} = \mathbf{v}_{dc} + \mathbf{v}_{co}$

or

$$\mathbf{v}_{dg} = \mathbf{v}_{co} + \mathbf{v}_{dc}$$

or

gd = oc + cd

$\mathbf{v}_{co}$ already exists in the diagram.

$\mathbf{v}_{dc}$ is $\perp CD$, draw **cd** $\perp CD$ through **c**;

$\mathbf{v}_{dg}$ is horizontal. Draw a horizontal line through **g** (or **o**) and locate the point **d**.

(i) v_d = **od** = <u>0.34 m/s</u>

(ii) $\omega_{bc} = \dfrac{v_{bc}}{BC} = \dfrac{0.12}{0.185} =$ <u>0.649 rad/s</u> clockwise

$\omega_{cd} = \dfrac{v_{dc}}{DC} = \dfrac{1.0}{0.24} =$ <u>4.17 rad/s</u> counter-clockwise

(iii) $T.\omega = F_d.v_d$

$F_d = 3000$ N

v_d = **od** (=**gd**) = 0.34 m/s

$$T = \frac{3000 \times 0.34}{(2\pi \times 100)/60} = \underline{97.4 \text{ N.m}}$$

Example 2.11 *The mechanism of a stone-crusher is shown in Fig. 2.19a along with various dimensions of links in mm. If crank OA rotates at a uniform velocity of 120 rpm, determine the velocity of the point K (jaw) when the crank OA is inclined at an angle of 30° to the horizontal. What will be the torque required at the crank OA to overcome a horizontal force of 40 kN at K?*

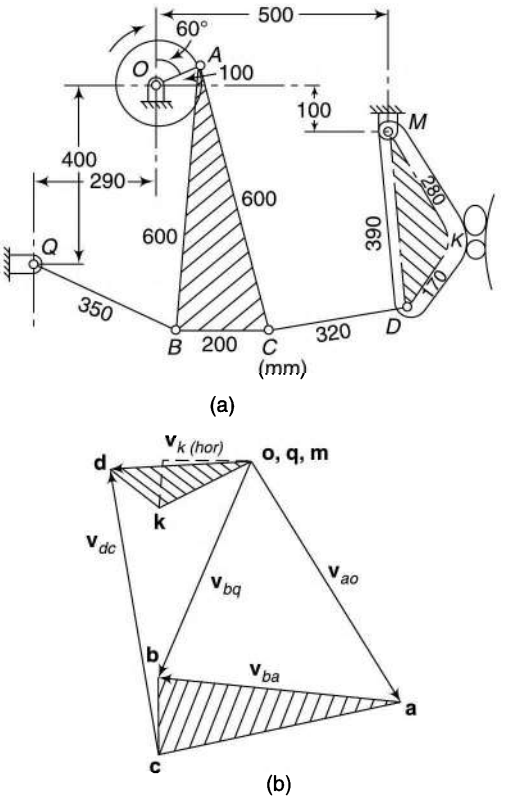

Fig. 2.19

Solution $\omega_{ao} = \dfrac{2\pi \times 120}{60} = 12.6$ rad/s

$v_{ao} = \omega_{ao} \times OA = 12.6 \times 0.1 = 1.26$ m/s

Write the vector equation for the mechanism *OABQ* and complete the velocity diagram as usual [(Fig. 2.19(b)]. Make Δ**bac** similar to Δ*BAC* (both are read clockwise).

Write the vector equation for the mechanism *OACDM* and complete the velocity diagram. Make Δ**dmk** similar to Δ*DMK* (both are read clockwise).

v_k = **ok** = 0.45 m/s

v_k (horizontal) = 0.39 m/s

$T.\omega_{ao} = F_k\, v_k$ (horizontal)

$$T = \frac{40\,000 \times 0.39}{12.6} = \underline{1242 \text{ N.m}}$$

2.10 CRANK- AND SLOTTED-LEVER MECHANISM

While analysing the motions of various links of a mechanism, sometimes we are faced with the problem of describing the motion of a moveable point on a link which has some angular velocity. For example, the motion of a slider on a rotating link. In such a case, the angular velocity of the rotating link along with the linear velocity of the slider may be known and it may be required to find the absolute velocity of the slider.

A crank and slotted-lever mechanism, which is a form of quick-return mechanism used for slotting and shaping machines, depicts the same form of motion [Fig. 2.20(a)]. *OP* is the crank rotating at an angular velocity of ω rad/s in the

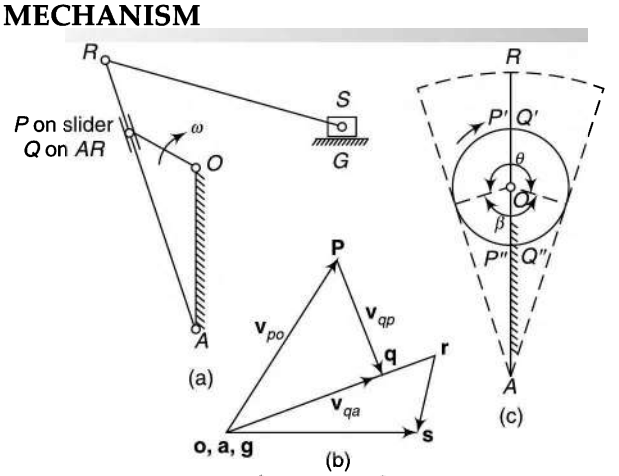

Fig. 2.20

clockwise direction about the centre O. At the end of the crank, a slider P is pivoted which moves on an oscillating link AR.

In such problems, it is convenient if a point Q on the link AR immediately below P is assumed to exist (P and Q are known as coincident points). As the crank rotates, there is relative movement of the points P and Q along AR.

Writing the vector equation for the mechanism OPA,

Vel. of Q rel. to O = Vel. of Q rel. to P + Vel. of P rel. to O

$$\mathbf{v}_{qo} = \mathbf{v}_{qp} + \mathbf{v}_{po}$$

or

$$\mathbf{v}_{qa} = \mathbf{v}_{po} + \mathbf{v}_{qp}$$

or

$$\mathbf{aq} = \mathbf{op} + \mathbf{pq}$$

In this equation,

$\mathbf{v}_{po}$ or $\mathbf{op} = \omega.OP$; $\perp$ to OP

$\mathbf{v}_{qp}$ or $\mathbf{pq}$ is unknown in magnitude ; $||$ to AR

$\mathbf{v}_{qa}$ or $\mathbf{aq}$ is unknown in magnitude ; $\perp$ to AR

Take the vector $\mathbf{v}_{po}$ which is fully known [Fig. 2.20 (b)].

$\mathbf{v}_{qp}$ is $||$ AR, draw a line $||$ to AR through **p;**

$\mathbf{v}_{qa}$ is $\perp AR$, draw a line $\perp AR$ through **a** (or **o**).

The intersection locates the point **q.**

The vector equation for the above could also have been written as

Vel. of P rel. to A = Vel. of P rel. to Q + Vel. of Q rel. to A

$$\mathbf{v}_{pa} = \mathbf{v}_{pq} + \mathbf{v}_{qa}$$

or

$$\mathbf{v}_{po} = \mathbf{v}_{qa} + \mathbf{v}_{pq}$$

or

$$\mathbf{op} = \mathbf{aq} + \mathbf{qp}$$

Take the vector $\mathbf{v}_{po}$ which is completely known.

$\mathbf{v}_{qa}$ is $\perp AR$, draw a line $\perp AR$ through **a;**

$\mathbf{v}_{pq}$ is $||$ AR, draw a line $||$ AR through **p.**

The intersection locates the point **q**. Observe that the velocity diagrams obtained in the two cases are the same except that the direction of $\mathbf{v}_{pq}$ is the reverse of that of $\mathbf{v}_{qp}$.

As the vectors **oq** and **qp** are perpendicular to each other, the vector $\mathbf{v}_{po}$ may be assumed to have two components, one perpendicular to AR and the other parallel to AR.

The component of velocity along AR, i.e., **qp** indicates the relative velocity between Q and P or the velocity of sliding of the block on link AR.

Now, the velocity of R is perpendicular to AR. As the velocity of Q perpendicular to AR is known, the point **r** will lie on vector **aq** produced such that **ar**/**aq** = AR/AQ

To find the velocity of ram S, write the velocity vector equation,

$$\mathbf{v}_{so} = \mathbf{v}_{sr} + \mathbf{v}_{ro}$$

or

$$\mathbf{v}_{sg} = \mathbf{v}_{ro} + \mathbf{v}_{sr}$$

or

$$\mathbf{gs} = \mathbf{or} + \mathbf{rs}$$

$\mathbf{v}_{ro}$ is already there in the diagram. Draw a line through **r** perpendicular to RS for the vector $\mathbf{v}_{sr}$ and a line through **g**, parallel to the line of motion of the slider S on the guide G, for the vector $\mathbf{v}_{sg}$. In this way the point **s** is located.

The velocity of the ram S = **os** (or **gs**) towards right for the given position of the crank.

Also, $\omega_{rs} = \dfrac{v_{rs}}{RS}$ clockwise

Usually, the coupler RS is long and its obliquity is neglected.

Then **or** ≈ **os**

Referring Fig. 2.20 (c),

$$\frac{\text{Time of cutting}}{\text{Time of return}} = \frac{\theta}{\beta}$$

When the crank assumes the position OP' during the cutting stroke, the component of velocity along AR (i.e., **pq**) is zero and **oq** is maximum (= **op**)

Let r = length of crank (= OP)
l = length of slotted lever (= AR)

c = distance between fixed centres (= AO)

ω = angular velocity of the crank

Then, during the cutting stroke,

$$v_{s\,\max} = \omega \times OP' \times \frac{AR}{AQ} = \omega r \times \frac{l}{c+r}$$

This is by neglecting the obliquity of the link RS, i.e. assuming the velocity of S equal to that of R.

Similarly, during the return stroke,

$$v_{s\,\max} = \omega \times OP'' \times \frac{AR}{AQ''} = \omega r \times \frac{l}{c-r}$$

$$\frac{v_{s\,\max}\,(\text{cutting})}{v_{s\,\max}\,(\text{return})} = \frac{\omega r \dfrac{1}{c+r}}{\omega r \dfrac{1}{c-r}} = \frac{c-r}{c+r}$$

Example 2.12 *Figure 2.21(a) shows the link mechanism of a quick return mechanism of the slotted lever type, the various dimensions of which are*

OA = 400 mm, OP = 200 mm, AR = 700 mm, RS = 300 mm

For the configuration shown, determine the velocity of the cutting tool at S and the angular velocity of the link RS. The crank OP rotates at 210 rpm.

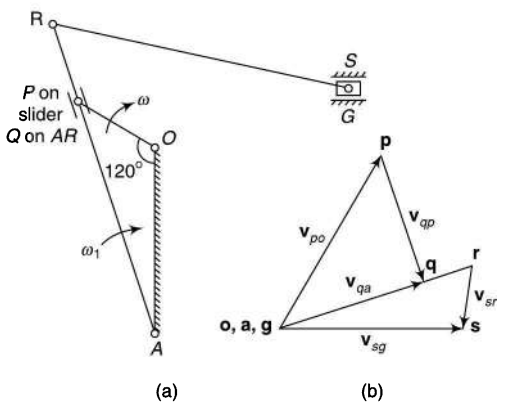

Fig. 2.21

Solution $\omega_{po} = \dfrac{2\pi \times 210}{60} = 22$ rad/s

Draw the configuration to a suitable scale. The vector equation for the mechanism *OPA*,

$$\mathbf{v}_{qa} = \mathbf{v}_{po} + \mathbf{v}_{qp} \quad \text{or} \quad \mathbf{aq} = \mathbf{op} + \mathbf{pq}$$

In this equation,

$$\mathbf{v}_{po} \text{ or } \mathbf{op} = \omega . OP = 22 \times 0.2 = 4.4 \text{ m/s}$$

Take the vector $\mathbf{v}_{po}$ which is fully known [Fig. 2.21(b)].

$\mathbf{v}_{qp}$ is | | *AR*, draw a line | | to *AR* through **p;**

$\mathbf{v}_{qa}$ is ⊥ *AR*, draw a line ⊥ *AR* through **a** (or **o**).

The intersection locates the point **q.** Locate the point **r** on the vector **aq** produced such that **ar**/**aq** = *AR/AQ*.

Draw a line through **r** perpendicular to *RS* for the vector $\mathbf{v}_{sr}$ and a line through **g**, parallel to the line of motion of the slider *S* on the guide *G*, for the vector $\mathbf{v}_{sg}$. In this way the point **s** is located.

The velocity of the ram *S* = **os** (or **gs**) = 4.5 m/s

It is towards right for the given position of the crank.

Angular velocity of link *RS*,

$$\omega_{rs} = \frac{v_{rs}}{RS} = \frac{1.4}{0.3} = 4.67 \text{ rad/s clockwise}$$

Example 2.13 *For the inverted slider-crank mechanism shown in Fig. 2.22(a), find the angular velocity of the link QR and the sliding velocity of the block on the link QR. The crank OA is 300 mm long and rotates at 20 rad/s in the clockwise direction. OQ is 650 mm and QOA = 40°*

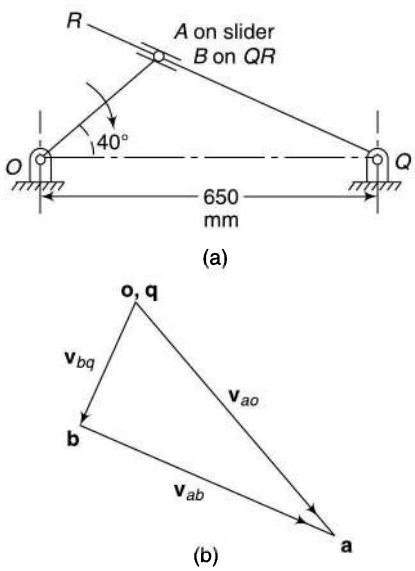

Fig. 2.22

Solution The velocity vector equation can be written as usual.

$$\mathbf{v}_{aq} = \mathbf{v}_{ab} + \mathbf{v}_{bq} \quad \text{or} \quad \mathbf{v}_{bo} = \mathbf{v}_{ba} + \mathbf{v}_{ao}$$

$$\mathbf{v}_{ao} = \mathbf{v}_{bq} + \mathbf{v}_{ab} \qquad \mathbf{v}_{bq} = \mathbf{v}_{ao} + \mathbf{v}_{ba}$$

$$\mathbf{oa} = \mathbf{qb} + \mathbf{ba} \qquad \mathbf{qb} = \mathbf{oa} + \mathbf{ab}$$

$\mathbf{v}_{ao}$ is fully known and after taking this vector, draw lines for $\mathbf{v}_{bq}$ and $\mathbf{v}_{ab}$ (or $\mathbf{v}_{ba}$) and locate the point **b**. obviously, the direction-sense of $\mathbf{v}_{ab}$ is opposite to that of $\mathbf{v}_{ba}$. Figure 2.22 (b) shows the solution of the first equation.

$$\omega_{qr} = \omega_{qb} = \frac{v_{qb} \text{ or } v_{bq}}{BQ}$$

$$= \frac{2.55}{0.46} \qquad (BQ = 0.46 \text{ m on measuring})$$

$$= \underline{5.54 \text{ rad/s}} \text{ counter} - \text{clockwise}$$

Sliding velocity of block = v_{ba} or **ab** = 5.45 m/s

Example 2.14 *For the position of the mechanism shown in Fig. 2.23(a), calculate the angular velocity of the link AR. OA is 300 mm long and rotates at 20 rad/s in the clockwise direction. OQ = 650 mm and QOA = 40°*

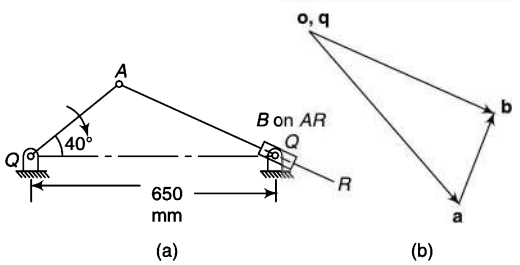

Fig. 2.23

Solution $v_{ao} = 20 \times 0.3 = 6$ m/s

Writing the vector equation,

$$\mathbf{v}_{bo} = \mathbf{v}_{ba} + \mathbf{v}_{ao} \quad \text{or} \quad \mathbf{v}_{aq} = \mathbf{v}_{ab} + \mathbf{v}_{bq}$$

Solving the first one,

$$\mathbf{v}_{bq} = \mathbf{v}_{ao} + \mathbf{v}_{ba}$$

or **qb = oa + ab**

Take $\mathbf{v}_{ao}$ to a convenient scale [Fig. 2.23(b)].

$\mathbf{v}_{ba}$ is $\perp AB$, draw a line $\perp AB$ through **a**;

$\mathbf{v}_{bq}$ is along AB, draw a line || to AB through **q**.

The intersection locates the point **b**.

$$\omega_{ar} = \omega_{ab} = \frac{v_{ab} \text{ or } v_{ba}}{AB} = \frac{2.55}{0.46}$$

= <u>5.54 rad/s</u> counter–clockwise

Example 2.15 *In the pump mechanism shown in Fig. 2.24(a), OA = 320 mm, AC = 680 mm and OQ = 650 mm. For the given configuration, determine the*

(i) angular velocity of the cylinder
(ii) sliding velocity of the plunger
(iii) absolute velocity of the plunger

The crank OA rotates at 20 rad/s clockwise.

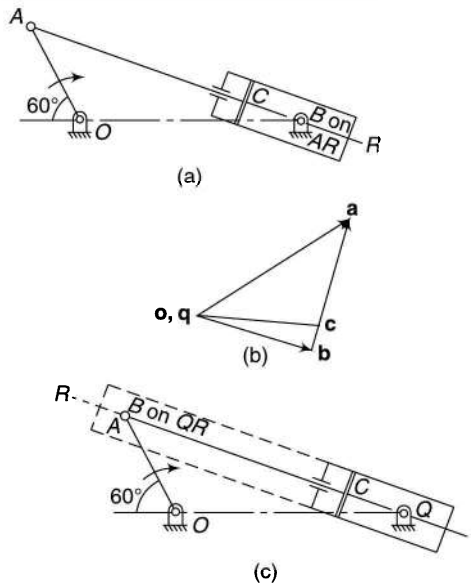

Fig. 2.24

Solution $v_{ao} = 0.32 \times 20 = 6.4$ m/s

Method I Produce AC to R. Line AC passes through the pivot Q. Let B be a point on AR beneath Q.

Writing the vector equation,

$$\mathbf{v}_{bo} = \mathbf{v}_{ba} + \mathbf{v}_{ao} \quad \text{or} \quad \mathbf{v}_{aq} = \mathbf{v}_{ab} + \mathbf{v}_{bq}$$

Solving any of these equations leads to same velocity diagram except for the direction of $\mathbf{v}_{ba}$ and $\mathbf{v}_{ab}$.

Taking the latter equation,

$$\mathbf{v}_{aq} = \mathbf{v}_{ab} + \mathbf{v}_{bq}$$

or

$$\mathbf{v}_{ao} = \mathbf{v}_{bq} + \mathbf{v}_{ab}$$

or $\mathbf{oa} = \mathbf{qb} + \mathbf{ba}$

Complete the velocity triangle as usual [Fig. 2.24(b)]

Locate point **c** on **ab** such that $\dfrac{\mathbf{ac}}{\mathbf{ab}} = \dfrac{AC}{AB}$

(i) Angular velocity of cylinder = Angular velocity of AR or AB

$= \dfrac{v_{ab}}{AB}$

$= \dfrac{4.77}{0.85} = \underline{5.61 \text{ rad/s}}$ clockwise

(ii) Sliding velocity of plunger = Velocity of B relative to Q

$= \mathbf{qb} = \underline{4.1 \text{ m/s}}$

(iii) Absolute velocity of plunger = **oc** or **qc** = $\underline{4.22 \text{ m/s}}$

Method II Link AC is integrated with the plunger and thus A can be considered to be a point on it. Assume the cylinder to be of such a length that a point B is located on it just beneath the point A. [Fig. 2.24 (c)].

Writing the vector equation,

$\mathbf{v}_{bo} = \mathbf{v}_{ba} + \mathbf{v}_{ao}$ or $\mathbf{v}_{aq} = \mathbf{v}_{ab} + \mathbf{v}_{bq}$

$\mathbf{v}_{bq} = \mathbf{v}_{ao} + \mathbf{v}_{ba}$ $\mathbf{v}_{ao} = \mathbf{v}_{bq} + \mathbf{v}_{ab}$

$\mathbf{qb} = \mathbf{oa} + \mathbf{ab}$ $\mathbf{oa} = \mathbf{qb} + \mathbf{ba}$

Thus, the same equations have been obtained as in Method-I and thus can be solved easily.

Example 2.16 *A Whitworth quick-return mechanism has been shown in Fig. 2.25(a). The dimensions of the links are OP (crank) = 240 mm, OA =150 mm, AR = 165 mm and RS = 430 mm. The crank rotates at an angular velocity of 2.5 rad/s. At the moment when the crank makes an angle of 45° with the vertical, calculate the*

(i) velocity of the ram S

(ii) velocity of the slider P on the slotted lever

(iii) angular velocity of the link RS

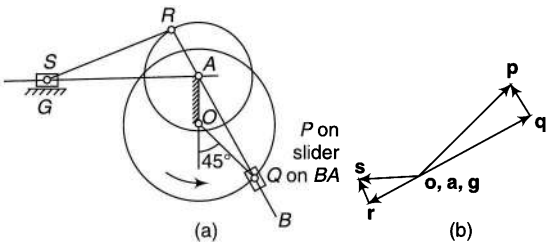

Fig. 2.25

Solution $v_p = 2.5 \times 0.24 = 0.6$ m/s

Locate a point Q on AB beneath point P on the slider.

Solve any of the following velocity vector equations,

$\mathbf{v}_{pa} = \mathbf{v}_{pq} + \mathbf{v}_{qa}$ or $\mathbf{v}_{qo} = \mathbf{v}_{qp} + \mathbf{v}_{po}$

Produce **qa** to **r** such that $\dfrac{\mathbf{ar}}{\mathbf{qa}} = \dfrac{AR}{QA}$

[Fig. 2.25(b)]

Now, $\mathbf{v}_{sa} = \mathbf{v}_{sr} + \mathbf{v}_{ra}$

Complete the velocity diagram as indicated by this equation

(i) $v_s = \mathbf{gs} = \underline{0.276 \text{ m/s}}$

(ii) $v_{pq} = \mathbf{qp} = \underline{0.177 \text{ m/s}}$

(iii) $\omega_{rs} = \dfrac{v_{rs} \text{ or } v_{sr}}{RS} = \dfrac{0.12}{0.43} =$

$\underline{0.279 \text{ rad/s}}$ clockwise

Example 2.17 *In the mechanism shown in Fig. 2.26(a), the crank OP rotates at 210 rpm in the counter-clockwise direction and imparts vertical reciprocating motion to rack through a toothed quadrant. Slotted bar and the quadrant oscillate about the fixed pivot A. Determine for the given position the*

(i) linear speed of the rack

(ii) ratio of the times of raising and lowering of the rack

(iii) stroke of the rack

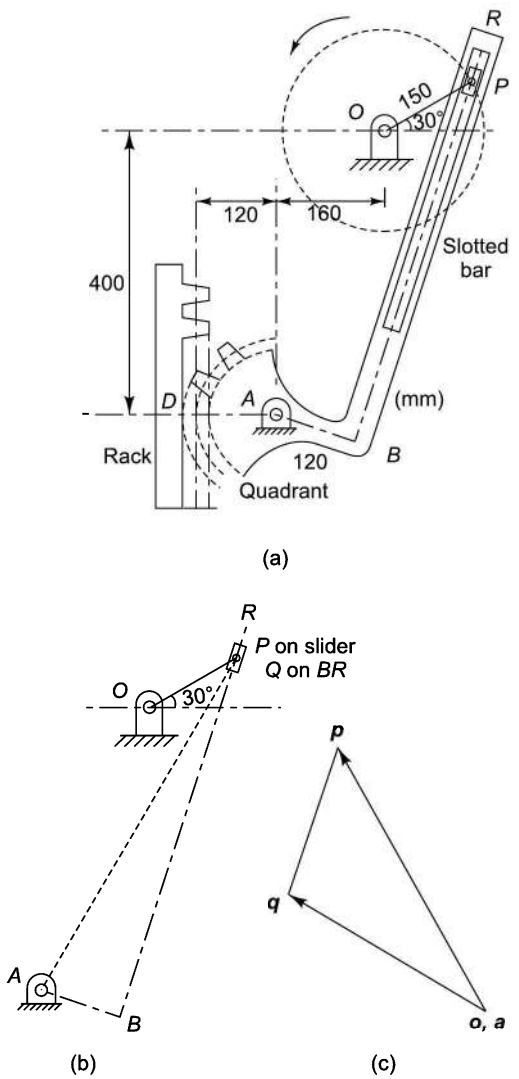

Fig. 2.26

Solution $\omega_{po} = \dfrac{2\pi N}{60} = \dfrac{2\pi \times 210}{60} = 22$ rad/s

$$v_{po} = 22 \times 0.15 = 3.3 \text{ m/s}$$

Draw the configuration diagram to a suitable scale [Fig. 2.26(b)].

Locate a point Q on BR beneath point P on the slider.

Then the vector equation is

$$\mathbf{v}_{qo} = \mathbf{v}_{qp} + \mathbf{v}_{po} \quad \text{or} \quad \mathbf{v}_{qa} = \mathbf{v}_{po} + \mathbf{v}_{qp}$$

Take the vector $\mathbf{v}_{po}$ to a convenient scale in the proper direction and sense [Fig. 2.26(c)].

$\mathbf{v}_{qp}$ is along BR, draw a line parallel to BR through **p;**

Now, Q is a point on the link ABR which is pivoted at point A. The direction of velocity of any point on the link is perpendicular to the line joining that point with the pivoted point A.

$\mathbf{v}_{qa}$ is $\perp QA$, draw a line $\perp QA$ through **a;**

The intersection of the two lines locates the point **q.**

Now angular velocity of the quadrant and the lever ABQ,

$$\omega_{aq} = \frac{v_{aq}}{AQ} = \frac{2.5}{0.577} = 4.33 \text{ rad/s}$$

counter-clockwise

(i) The linear velocity of the rack will be equal to the tangential velocity of the quadrant at the teeth, i.e.,

$$v_r = \omega \times AD = \omega \times 120 = 4.33 \times 120 = \underline{519.6 \text{ mm/s}}$$

(ii) The reciprocating rack changes the direction when the crank OP assumes a position such that the tangent at P to the circle at O is also a tangent to the circle at A with radius AB as shown in Fig. 2.27. The rack is lowered during the rotation of the crank from P to P' and is raised when P' moves to P counter-clockwise.

Thus,

$$\frac{\text{Time of lowering}}{\text{Time of raising}} = \frac{\theta}{\beta} = \frac{215^\circ}{135^\circ} = 1.59$$

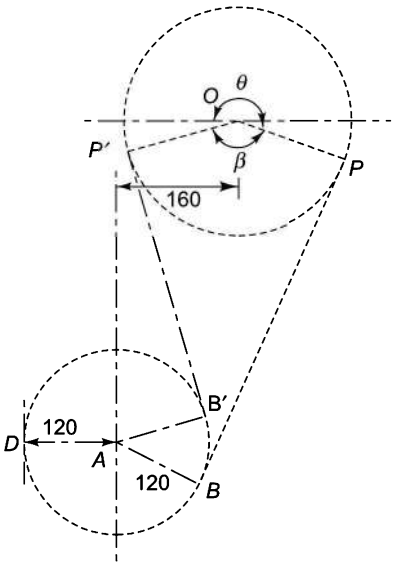

Fig. 2.27

(iii) Stroke of the rack = angular displacement of the quadrant × its radius

$= \text{angle } BAB' \times AB$

$= 44 \times \dfrac{\pi}{180} \times 120 = 92.2 \text{ mm}$

($\angle BAB' = 44°$ by measurement)

Example 2.18 *In the swiveling-joint mechanism shown in Fig. 2.28(a), AB is the driving crank rotating at 300 rpm clockwise.*

The lengths of the various links are

AD = 650 mm, AB = 100 mm, BC = 800 mm, DC = 250 mm, BE = CE, EF = 400 mm, OF = 240 mm, FS = 400 mm

For the given configuration of the mechanism, determine the

(i) velocity of the slider block S

(ii) angular velocity of the link EF

(iii) velocity of the link EF in the swivel block

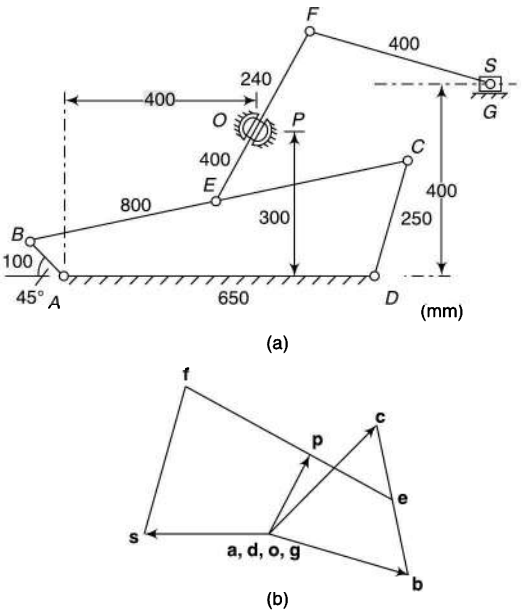

Fig. 2.28

Solution $\omega_{ba} = \dfrac{2\pi \times 300}{60} = 31.4 \text{ rad/s}$

$v_b = 31.4 \times 0.1 = 3.14 \text{ m/s}$

The velocity diagram is completed as follows:

- Draw the velocity diagram of the four-link mechanism *ABCD* as usual starting with the vector **ab** as shown in Fig. 2.28(b).
- Locate the point **e** in the velocity diagram at the midpoint of **bc** as the point *E* is the midpoint of *BC*. Let *Q* be a point on the link *EF* at the joint *O*. Draw a line ⊥ *EQ* through **e**, a point on which will represent the velocity of *Q* relative to *E*.
- The sliding velocity of link *EF* in the joint at the instant is along the link. Draw a line parallel to *EF* through **o**, the intersection of which with the previous line locates the point **q**.
- Extend the vector **eq** to **f** such that **ef/eq** = *EF/EQ*.

- Through **f** draw a line $\perp FS$, and through **g** a line parallel to line of stroke of the slider. The intersection of the two lines locates the point **s**.

Thus, the velocity diagram is completed.

(i) The velocity of slider S = **gs** = 2.6 m/s

(ii) The angular velocity of the link EF

$$= \frac{v_{fe}}{EF} = \frac{\mathbf{ef}}{EF} = \frac{4.9}{0.4} = 12.25 \text{ rad/s (ccw)}$$

(iii) The velocity of the link EF in the swivel block = **oq** =1.85 m/s

2.11 ALGEBRAIC METHODS

Vector Approach

In Sec. 2.10, the concept of coincident points was introduced. However, complex algebraic methods provide an alternative formulation for the kinematic problems. This also furnishes an excellent means of obtaining still more insight into the meaning of the term *coincident points.*

Let there be a plane moving body having its motion relative to a fixed coordinate system xyz (Fig. 2.29). Also, let a moving coordinate system $x'y'z'$ be attached to this moving body. Coordinates of the origin A of the moving system are known relative to the absolute reference system. Assume that the moving system has an angular velocity ω also.

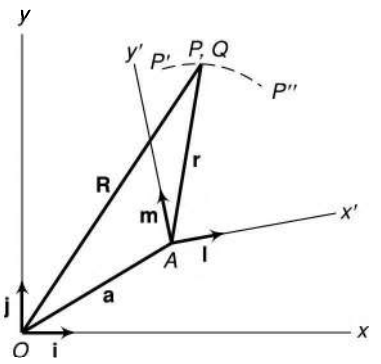

Fig. 2.29

Let

i,j,k	unit vectors for the absolute system
l,m,n	unit vectors for the moving system
ω	angular velocity of rotation of the moving system
R	vector relative to fixed system
r	vector relative to moving system

Let a point P move along path $P'PP''$ relative to the moving coordinate system $x'y'z'$. At any instant, the position of P relative to the fixed system is given by the equation

$$\mathbf{R} = \mathbf{a} + \mathbf{r} \tag{i}$$

where $\mathbf{r} = x'\mathbf{l} + y'\mathbf{m} + z'\mathbf{n}$

Thus, (i) may be written as, $\mathbf{R} = \mathbf{a} + x'\mathbf{l} + y'\mathbf{m} + z'\mathbf{n}$

Taking the derivatives with respect to time to find the velocity,

$$\dot{\mathbf{R}} = \dot{\mathbf{a}} + (\dot{x}'\mathbf{l} + \dot{y}'\mathbf{m} + \dot{z}'\mathbf{n}) + (x'\dot{\mathbf{l}} + y'\dot{\mathbf{m}} + z'\dot{\mathbf{n}}) \tag{ii}$$

The first term in this equation indicates the velocity of the origin of the moving system. The second term refers to the velocity of P relative to the moving system. The third term is due to the fact that the reference system has also rotary motion with angular velocity ω.

Also, $\dot{\mathbf{l}} = \omega \times \mathbf{l}$, $\dot{\mathbf{m}} = \omega \times \mathbf{m}$, $\dot{\mathbf{n}} = \omega \times \mathbf{n}$

Therefore, Equation (ii) becomes

$$\dot{\mathbf{R}} = \dot{\mathbf{a}} + (\dot{x}'\mathbf{l} + \dot{y}'\mathbf{m} + \dot{z}'\mathbf{n}) + \omega(x'\mathbf{l} + y'\mathbf{m} + z'\mathbf{n}$$

The above equation can be written in the form,

$$\mathbf{v}_p = \mathbf{v}_a + \mathbf{v}^R + \omega \times \mathbf{r} \tag{2.7}$$

The second term known as *relative velocity* is the velocity which an observer attached to the moving system would report for point *P*, i.e., velocity of *P* relative to the moving body or system. This also implies that it is the velocity relative to a coincident point *Q* on the moving body since the observer may be stationed at the point *Q* on the moving body.

Now, the absolute velocity of the coincident point *Q* on the moving system which coincides with the point *P* at the instant may be written as

$$\begin{aligned} \mathbf{v}_{qo} &= \mathbf{v}_{qa} + \mathbf{v}_{ao} \\ &= \mathbf{v}_{ao} + \mathbf{v}_{qa} \\ &= \mathbf{v}_a + \omega \times \mathbf{r} \end{aligned}$$

and equation (iii) changes to $\mathbf{v}_p = \mathbf{v}_{qo} + \mathbf{v}^R$

Thus absolute velocity of the point *P* moving relative to a moving reference system is equal to the velocity of the point relative to the moving system plus the absolute velocity of a coincident point fixed to the moving reference system.

The above equation may be written as

$$\begin{aligned} \mathbf{v}_{po} &= \mathbf{v}_{qo} + \mathbf{v}_{pq} \\ \mathbf{v}_{po} &= \mathbf{v}_{pq} + \mathbf{v}_{qo} \end{aligned}$$

Vel. of *P* rel. to *O* = Vel. of *P* rel. to *Q* + Vel. of *Q* rel. to *O*

Use of Complex Numbers

In a complex number system, a vector connecting two points *O* and *P* (Fig. 2.30) may be expressed as

$\mathbf{r} = a + ib$ in the rectangular form

where *a* and *b* are known as *real* and *imaginary* parts of **r**. The real part is always taken along the *X*-axis from the origin, to the right if positive and to the left if negative. The symbol *i* prefixed to *b* indicates that it is to be taken at an angle of 90° in the counter-clockwise direction from the positive *x*-direction.

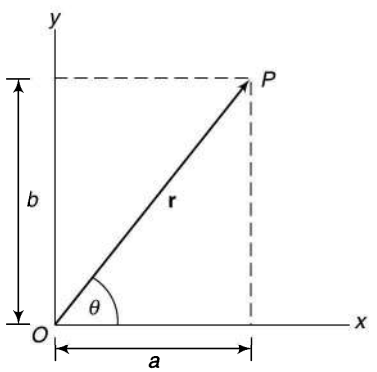

Fig. 2.30

As $i = \sqrt{-1}$ indicates 90° counter-clockwise direction,

Therefore,

$i^2 = (\sqrt{-1})^2 = -1$ is 180° counter-clockwise

$i^3 = (\sqrt{-1})^3 = (\sqrt{-1})^2\sqrt{-1} = (-1)i = -i$ is 270° counter-clockwise or 90° clockwise

In the polar form **r** can be expressed as

$$\mathbf{r} = r\cos\theta + ir\sin\theta = r(\cos\theta + i\sin\theta)$$

In this equation r is said to be magnitude of **r**, denoted by $|\mathbf{r}|$ and θ is called the argument of **r**, denoted by arg(**r**).

Since r is the magnitude of vector **r**, the term in the parenthesis in the above equation plays the role of a unit vector which points in the direction of OP.

From trigonometry, it can be written that

$$e^{i\theta} = \cos\theta + i\sin\theta$$

Therefore,

$$\mathbf{r} = re^{i\theta} \text{ which is the complex polar form.} \tag{i}$$

Complex numbers are assumed to follow all the formal rules of real algebra.

Velocity

Differentiating Eq. (i) with respect to time,

$$\mathbf{v} = \dot{r}e^{i\theta} + ir\dot{\theta}e^{i\theta}$$
$$= (\dot{r} + ir\dot{\theta})e^{i\theta} \tag{2.8}$$

2.12 INSTANTANEOUS CENTRE (I-CENTRE)

Let there be a plane body p having a non-linear motion relative to another plane body q. At any instant, the linear velocities of two points A and B on the body p are $\mathbf{v}_a$ and $\mathbf{v}_b$ respectively in the directions as shown in Fig. 2.31.

If a line is drawn perpendicular to the direction of $\mathbf{v}_a$ at A, the body can be imagined to rotate about some point on this line. Similarly, the centre of rotation of the body also lies on a line perpendicular to the direction of $\mathbf{v}_b$ at B. If the intersection of the two lines is at I, the body p will be rotating about I at the instant. This point I is known as the *instantaneous centre of velocity* or more commonly *instantaneous centre of rotation* for the body p. This property is true only for an instant and a new point will become the instantaneous centre at the next instant. Thus, it is a misnomer to call this point the centre of rotation, as generally this point is not located at the centre of curvature of the apparent path taken by a point

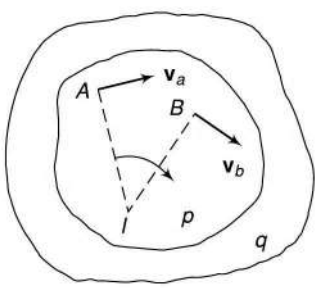

Fig. 2.31

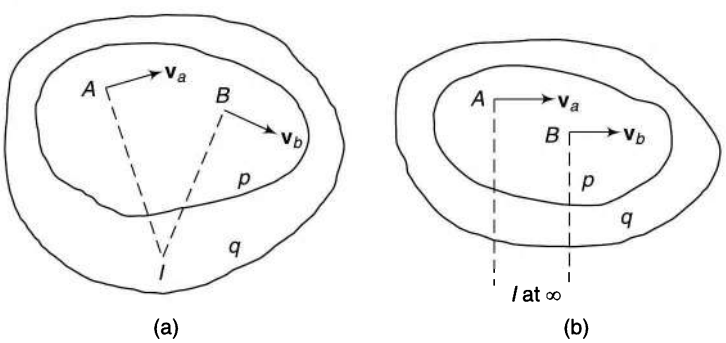

Fig. 2.32

of one body with respect to the other body. However, even with this limitation, the instantaneous centre is a useful tool for understanding the kinematics of planar motion. In our further discussions, this centre will be called the *I-centre.*

In case the perpendiculars to $\mathbf{v}_a$ and $\mathbf{v}_b$ at A and B respectively meet outside the body p, the I-centre will lie outside the body p [Fig. 2.32(a)]. If the directions of $\mathbf{v}_a$ and $\mathbf{v}_b$ are parallel and the perpendiculars at A and B meet at infinity, the I-centre of the body lies at infinity. This is the case when the body has a linear motion [Fig. 2.32(b)].

As the body p rotates about the point I at the instant and the velocity of any point on the body is proportional to the distance of the point from I, the velocity of the point I itself would be zero (the distance being zero). This implies that the two bodies p and q are relatively at rest or there is no relative motion between the two at the I-centre.

Now imagine that the body q is also in motion relative to a third body r (Fig. 2.33). Then the motion of the point I relative to the third body would be the same whether this point is considered on the body p or q.

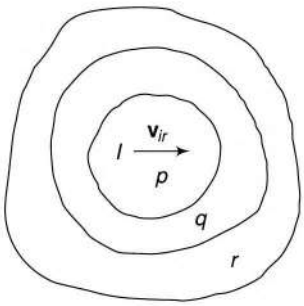

Fig. 2.33

Notation

An I-centre is a centre of rotation of a moving body relative to another body. If a body p is in motion relative to a fixed body q, the centre of rotation (I-centre) may be named as pq. However, in case of relative motions, the body q can also be imagined to rotate relative to body p (i.e., as if the body p is fixed for the moment) about the same centre. Thus, centre of rotation or I-centre can be named qp also.

This shows that the I-centre of the two bodies p and q in relative motion can be named either pq or qp meaning the same thing. In general, the I-centre will be named in the ascending order of the alphabets or digits, i.e., 13, 35, pq, eg, etc.

Number of I-Centres

For two bodies having relative motion between them, there is an I-centre. Thus, in a mechanism, the number of I-centres will be equal to possible pairs of bodies or links.

Let N = Number of I-centres

n = number of bodies or links

Then, $$N = \frac{n(n-1)}{2}$$

2.13 KENNEDY'S THEOREM

Consider three plane bodies p, q and r; r being a fixed body. p and q rotate about centre pr and qr respectively relative to the body r. Thus, pr is the I-centre of bodies p and r whereas qr is the I-centre of bodies q and r. Assume the I-centre of the bodies p and q at the point pq as shown in Fig. 2.34.

Now, p and q both are moving relative to a third fixed body r. Therefore, the motion of their mutual *I*-centre pq is to be the same whether this point is considered in the body p or q. (Refer to Sec. 2.12).

If the point pq is considered on the body p, its velocity $\mathbf{v}_p$ is perpendicular to the line joining pq and pr.

If the point pq is considered on the body q, its velocity v_q is perpendicular to the line joining pq and qr.

It is found that the two velocities of the I-centre pq are in different directions which is impossible. Therefore, the I-centre of the bodies p and q cannot be at the assumed position pq. The velocities v_p and v_q of the I-centre will be same only if this centre lies on the line joining pr and qr.

In words, if three plane bodies have relative motion among themselves, their I-centre must lie on a straight line. This is known as *Kennedy's theorem.*

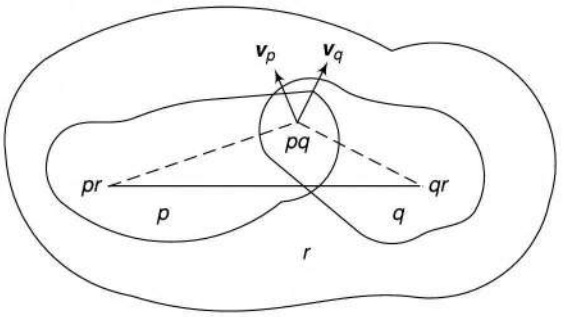

Fig. 2.34

2.14 LOCATING I-CENTRES

The procedure to locate I-centres of a mechanism is being illustrated with the help of the following example of a four-link mechanism.

Figure 2.35 shows a four-link mechanism $ABCD$, the links of which have been named as 1, 2, 3 and 4. The number of I-centres is given by

$$N = \frac{n(n-1)}{2} = \frac{4(4-1)}{2} = 6$$

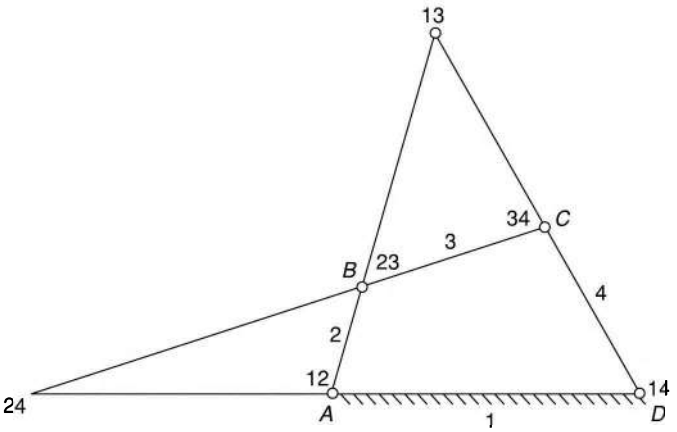

Fig. 2.35

Now, as the centre of rotation of 2 relative to 1 is at A, the I-centre 12 for the links 1 and 2 lies at A. Also, the location of A is not going to change with the rotation of the link 2. Therefore, this I-centre is referred as the *fixed I-centre*. Similarly, 14 is another fixed I-centre for the links 1 and 4 located at D.

Link 3 rotates about B relative to the link 2 and thus the I-centre 23 for links 2 and 3 lies at B. With the movement of the links, the position of the pin-joint B will change and so will the position of the I-centre. However, at all times, the I-centre will be located at the pin joint. Thus, 23 is known as a *permanent* but not a fixed I-centre. Similarly, 34 is another permanent but not a fixed I-centre for the links 3 and 4.

The above I-centres have been located by inspection only. The other two I-centres 13 and 24 which are neither fixed nor permanent can be located easily by applying Kennedy's theorem as explained below.

I-Centre 13

First, consider three links 1, 2 and 3. One more link 2 has been added to links 1 and 3 with the condition that the I-centres 12 and 23 are already known and the third I-centre 13 is to be located.

Now, as the three links 1, 2 and 3 have relative motions among themselves, their I-centres lie on a straight line. Thus, I-centre 13 lies on the line joining 12 and 13 (or line AB).

Similarly, consider the links 1, 4 and 3. Their I-centres are 14, 34 and 13. Out of these, 14 and 34 are

already known. Therefore, I-centre 13 lies on the line joining 14 and 34 (or *DC*). The intersection of the line joining 12 and 23 (or produced) with the line joining 14 and 34 (or produced) locates the I-centre 13.

I-Centre 24

Considering two sets of links 2, 1, 4 and 2, 3, 4; the I-centre would lie on the lines 12–14 and 23–34. The interaction locates the I-centre 24.

There is a convenient way of keeping the track of the I-centres located by inspection and by Kennedy's theorem.

Mark points as the corners of a regular polygon having same number of sides as the number of links in the mechanism.

Name them according to the links of the mechanism. Join the points of which the I-centres have been located by inspection, by firm lines. Then go on joining the points, of which the I-centres are being located by Kennedy's theorem, by dotted lines.

For example, for a four-link mechanism, mark the points 1, 2, 3 and 4 as shown in Fig. 2.36(a). Join 12, 23, 34 and 14 (or 41) by firm lines after locating these I-centres by inspection [Fig. 2.36(b)]. In Fig. 2.29(c) these centres have been encircled for the record.

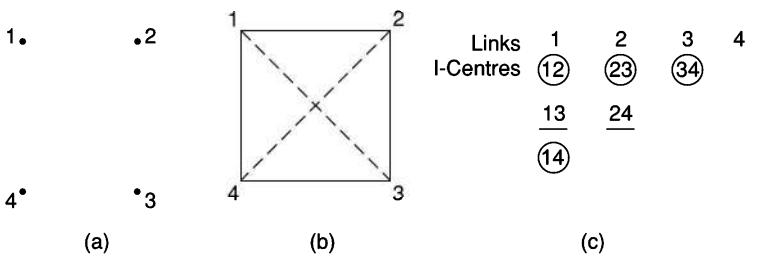

Fig. 2.36

To find the I-centre 13, join 1 to 3 by a dotted line [Fig. 2.36(b)]. The construction shows that the I-centre lies on the line joining I-centres 12 and 23, and the line joining 14 and 34 (or 43). Locate the I-centre actually on the intersection of the two lines in the configuration diagram of the mechanism. In Fig. 2.36(c), 13 is underlined to note that the I-centre has been located by Kennedy's theorem. Similarly, find the I-centre 24 by joining 2 and 4 and locate the point on the intersection of the lines 12–14 and 23–34.

It was mentioned in Section 2.15 that the I-centre is generally not located at the centre of curvature of the apparent path taken by a point of one body with respect to the other body. In the above example of a four-link mechanism, the I-centre of the pivot point *B* on the coupler relative to the fixed link is at 13, whereas its apparent path is a circular curve about the fixed pivot *A* which means *A* is its centre of curvature and the length *AB* is the radius of curvature. Also, the I-centre of the pivot point *C* on the coupler relative to the fixed link is again at 13, whereas its apparent path is rotation about the fixed pivot *D*.

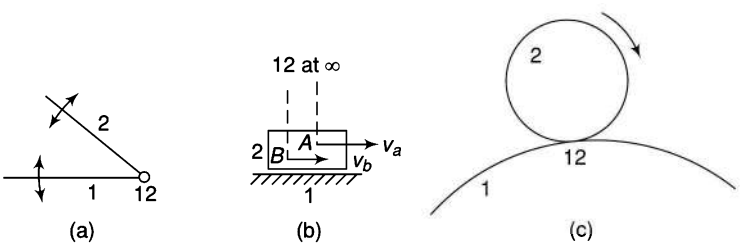

Fig. 2.37

Rules to Locate I-Centres by Inspection

1. In a pivoted joint, the centre of the pivot is the I-centre for the two links of the pivot [Fig. 2.37 (a)].
2. In a sliding motion, the I-centre lies at infinity in a direction perpendicular to the path of motion of the slider. This is because the sliding motion is equivalent to a rotary motion of the links with the radius of curvature as infinity [Fig. 2.37(b)].

3. In a pure rolling contact of the two links, the I-centre lies at the point of contact at the given instant [Fig. 2.37(c)]. It is because the two points of contact on the two bodies have the same linear velocity and thus there is no relative motion of the two at the point of contact which is the I-centre (Refer Sec. 2.12).

2.15 ANGULAR-VELOCITY-RATIO THEOREM

When the angular velocity of a link is known and it is required to find the angular velocity of another link, locate their common I-centre. The velocity of this I-centre relative to a fixed third link is the same whether the I-centre is considered on the first or the second link (Sec. 2.13). First consider the I-centre to be on the first link and obtain the velocity of the I-centre. Then consider the I-centre to be on the second link and find its angular velocity.

For example, if it is required to find the angular velocity of the link 4 when the angular velocity of the link 2 of a four-link mechanism is known, locate the I-centre 24 (Fig. 2.35). Imagine link 2 to be in the form of a flat disc containing point 24 and revolving about 12 or A. Then

$$v_{24} = \omega_2 (24 - 12)$$

Now, imagine the link 4 to be large enough to contain point 24 and revolving about 14 or D. Then

$$v_{24} = \omega_4 (24 - 14)$$

or

$$\omega_4 = \frac{v_{24}}{24-14} = \omega_2 \left(\frac{24-12}{24-14}\right)$$

or

$$\frac{\omega_4}{\omega_2} = \frac{24-12}{24-14}$$

The above equation is known as the *angular-velocity-ratio theorem*. In words, the angular velocity ratio of two links relative to a third link is inversely proportional to the distances of their common I-centre from their respective centres of rotation.

In the above case, the points 12 and 14 lie on the same side of 24 on the line 24–14 and the direction of rotation of the two links (2 and 4) is the same, i.e., clockwise or counter-clockwise. Had they been on the opposite sides of the common I-centre, the direction would have been opposite.

Example 2.19 *In a slider-crank mechanism, the lengths of the crank and the connecting rod are 200 mm and 800 mm respectively.*

Locate all the I-centres of the mechanism for the position of the crank when it has turned 30° from the inner dead centre. Also, find the velocity of the slider and the angular velocity of the connecting rod if the crank rotates at 40 rad/s.

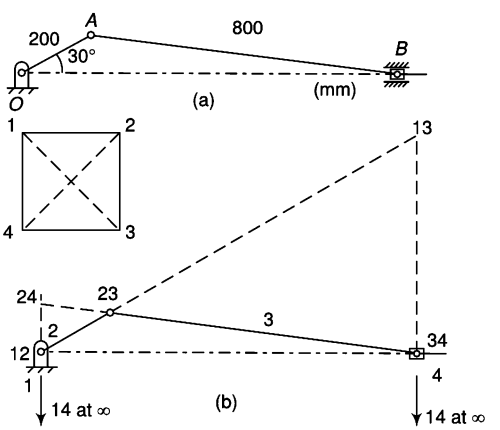

Fig. 2.38

Solution The slider-crank mechanism is shown in Fig. 2.38(a). Name the four links as 1, 2, 3 and 4. Locate the various I-centres as follows:

(i) Locate I-centres 12, 23 and 34 by inspection. They are at the pivots joining the respective links. As the line of stroke of the slider is horizontal, the I-centre 14 lies vertically upwards or downwards at infinity as shown in Fig. 2.38(b).

(ii) Take four points in the form of a square and mark them as 1, 2, 3 and 4. Join 12, 23, 34 and 14 by firm lines as these have been located by inspection.

(iii) I-centre 24 lies at the intersection of lines joining the I-centres 12, 14 and 23, 34 by Kennedy's theorem. Joining of 12 and 14 means a vertical line through 12. This I-centre can be shown in the square by a dotted line to indicate that this has been located by inspection.

(iv) I-centre 13 lies at the intersection of lines joining the I-centres 12, 23 and 14, 34. Joining of 34 and 14 means a vertical line through 34. Show this I-centre in the square by a dotted line.

Thus, all the I-centres are located.

As velocity of the link 2 is known and the velocity of the link 4 is to be found, consider the I-centre 24. The point 24 has the same velocity whether it is assumed to lie in link 2 or 4. First, assume 24 to lie on the link 2 which rotates at angular velocity of 40 rad/s.

Linear velocity of I-centre 24 = 40 × (12–24) = 40 × 0.123

= 4.92 m/s in the horizontal direction

Now, when this point is assumed in the link 4, it will have the same velocity which means the linear velocity of the slider is the same as of the point 24.

Thus, linear velocity of the slider = 4.92 m/s

Example 2.20 *Figure 2.39(a) shows a six-link mechanism. The dimensions of the links are OA = 100 mm, AB = 580 mm, BC = 300 mm, QC = 100 mm and CD = 350 mm. The crank OA rotates clockwise at 150 rpm. For the position when the crank OA makes an angle of 30° with the horizontal, determine the*

(i) linear velocities of the pivot points B, C and D

(ii) angular velocities of the links AB, BC and CD

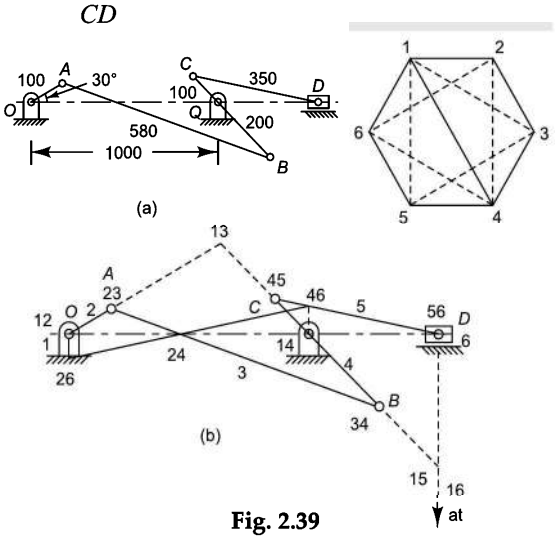

Fig. 2.39

Solution $\omega_2 = \dfrac{2\pi \times 150}{60} = 15.7$ rad/s

$$v_a = \omega_2 .OA = 15.7 \times 0.1 = 1.57 \text{ m/s}$$

Locate I-centres 12, 23, 34, 45, 56, 16 and 14 by inspection.

- Locate 13 which lies on the intersection of 12–23 and 14–34 [Fig. 2.39(b)]
- Locate 15 which lies on the intersection of 14–45 and 56–16 (16 is at ∞)

(i) Now, at the instance, the link 3 rotates about the I-centre 13.

Thus, $\dfrac{v_b}{v_a} = \dfrac{13-34}{13-23}$ or $v_b = \dfrac{453}{265} \times 1.57 = 2.66$ m/s

and $\dfrac{v_c}{v_b} = \dfrac{QC}{QB}$ or $v_c = \dfrac{100}{200} \times 2.66 = 1.33$ m/s

At the instance, the link 5 rotates about the I-centre 15.

Thus, $\frac{v_d}{v_c} = \frac{15-56}{15-45}$ or

$$v_d = \frac{300}{506} \times 1.33 = 0.788 \quad \text{m/s}$$

(ii) $\omega_{ab} = \frac{v_a}{13-A} = \frac{1.57}{0.267} = 5.88$ rad/s

$$\omega_{bc} = \frac{v_b}{BQ} = \frac{2.66}{0.2} = 13.3 \text{ rad/s}$$

$$\omega_{cd} = \frac{v_c}{15-c} = \frac{1.33}{0.499} = 2.66 \text{ rad/s}$$

* In case it is required to find the velocity of the slider D only, then as the velocity of a point A on the link 2 is known and the velocity of a point on the link 6 is to be found, locate the I-centre 26 as follows:

- Locate 24 which lies on the intersection of 21–14 and 23–34.
- Locate 46 which lies on the intersection of 45–56 and 14–16 (16 is at ∞).
- Locate 26 which is the intersection of 24–46 and 21–16.

First, imagine the link 2 to be in the form of a flat disc containing the point 26 and revolving about O with an angular velocity of 15.7 rad/s.

Then, $v_{26} = \omega_2 \times (12\text{–}26) = 15.7 \times 50 = 785$ mm/s or 0.785 m/s

The velocity of the point 26 is in the horizontally left direction if OA rotates clockwise.

Now, imagine the link 6 (slider) to be large enough to contain the point 26. The slider can have motion in the horizontal direction only and the velocity of a point 26 on it is known; it implies that all the points on the slider move with the same velocity.

Thus, velocity of the slider, $v_d = v_{26} = \underline{785 \text{ mm/s}}$

Example 2.21 *Figure 2.40(a) shows a six-link mechanism. The dimensions of the links are OA = 100 mm, AB = 450 mm, BD = 200 mm, QB = 400 mm, DE = 200 mm, CE = 200 mm. Find the angular velocity of the link CE by the instantaneous centre method if the link OA rotates at 20 rad/s.*

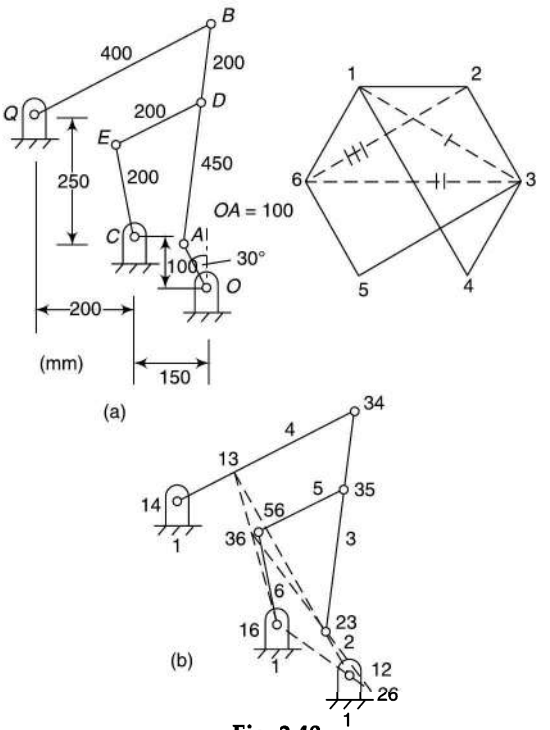

Fig. 2.40

Solution Name the six links by numbers as 1, 2, 3, 4, 5 and 6 as shown in Fig. 2.40(b).

The velocity of the link OA (2) is known and the velocity of the link CE (6) is to be found. Therefore, the I-centre 26 is required to be located.

- First mark the I-centres which can be located by inspection. They are 12, 23, 34, 56 16 and 14.
- Locate the I-centre 13 which is at the intersection of lines joining I-centres 12, 23 and 16, 36. Similarly, Locate the I-centre 36 which is at the intersection of lines joining I-centres 13,16 and 35, 56.
- Locate the I-centre 26 at the intersection of lines joining I-centres 12, 16 and 23, 36.
- Now, as the velocity of the I-centre 26 is the same whether it is considered to lie on link 2 or 6,

$v_{26} = \omega_2 .(12–26) = \omega_6 .(16–26)$

$$\text{or } \omega_6 = \frac{\omega_2(12-26)}{(16-26)} = \frac{20 \times 53}{235} = \underline{4.5 \text{ rad/s}}$$

Example 2.22 *Figure 2.41(a) shows a six-link mechanism. The dimensions of the links are OA = 220 mm, AB = 485 mm, BQ = 310 mm, BC = 590 mm and CD = 400 mm. For the position when the crank OA makes an angle of 60° with the vertical, find the velocity of the slider D. The crank OA rotates clockwise at 150 rpm.*

Solution $\omega_2 = \dfrac{2\pi \times 150}{60} = 5\pi$ rad/s

The velocity of a point A on the link 2 is known. It is required to find the velocity of a point on the link 6. Thus, locate the I-centre 26 as follows:

- Locate I-centres 12, 23, 34, 45, 56, 16 and 14 by inspection.
- Locate 24 which lies on the intersection of 21–14 and 23–34 [Fig. 2.41(b)].
- Locate 46 which lies on the intersection of 45–56 and 14–16 (16 is at ∞).
- Locate 26 which is the intersection of 24–46 and 21–16.

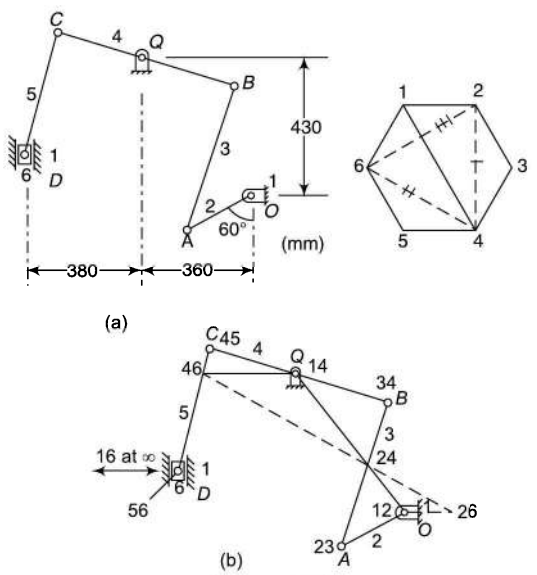

Fig. 2.41

First, imagine the link 2 to be in the form of a flat disc containing the point 26 and revolving about O with an angular velocity of 5π rad/s.

Then, $v_{26} = \omega_2 \times (12–26) = 5\pi \times 0.145 = 2.28$ m/s.

The velocity of the point 26 is in the vertically downward direction if OA rotates clockwise.

Now, imagine the link 6 (slider) to be large enough to contain the point 26. The slider can have motion in the vertical direction only and the velocity of a point 26 on it is known; it implies that all the points on the slider move with the same velocity.

Thus, velocity of the slider, $v_d = v_{26} = \underline{2.28 \text{ m/s}}$

Example 2.23 *Figure 2.42a shows the configuration of a Whitworth quick return mechanism. The lengths of the fixed link OA and the crank OP are 200 mm and 350 mm respectively. Other lengths are: AR = 200 mm and RS = 400 mm. Find the velocity of the ram using the instantaneous centre method when the crank makes an angle of 120° with the fixed link and rotates at 10 rad/s.*

Solution I-centre 26 is needed to be located as the velocity of the link 2 is known and that of 6 is to be found.

- Locate I-centres 12, 23, 34, 45, 56 , 16 and 14 by inspection [Fig. 2.42(b)]
- Locate I-centre 24 at the intersection of lines joining I-centres 23, 34 and 12, 14.
- Locate I-centre 46 at the intersection of lines joining I-centres 14, 16 and 45, 56. I-centre 16 is perpendicular to AS and lies at infinity. Joining of 12 and 16 means a line passing through OA.
- Now, while locating I-centre 26 at the intersection of lines joining I-centres 12, 16 and 24, 46 it is observed that they lie on the same vertical line OA. Thus, I-centre 26 cannot be located using this path.
- Locate I-centres 15 and then 25 using Kennedy's theorem.
- Now, locate I-centre 26 which lies at the

intersection of lines joining I-centres 12, 16 and 25, 56.

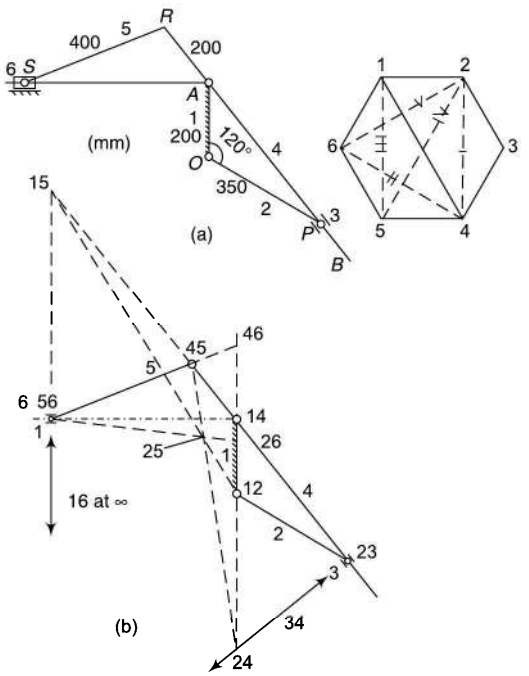

Fig. 2.42

Now, as the velocity of the I-centre 26 is the same whether it is considered to lie on the link 2 or 6,

$$v_{26} = \omega_2 .(12–26) = v_s$$

or $$v_s = \omega_2 .(12–26) = 10 \times 0.137 = 1.37 \text{ m/s}$$

Example 2.24 *Solve Example 2.4 by the instantaneous centre method.*

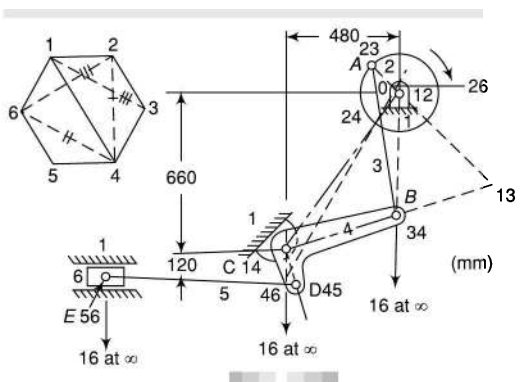

Fig. 2.43

Solution Draw the configuration to a suitable scale as shown in Fig. 2.43.

(a) To find the velocity of E or the link 6, it is required to locate the I-centre 26 as the velocity of a point A on the link 2 is known. After locating I-centres by inspection, locate I-centres 24, 46 and 26 by Kennedy's theorem.

First consider 26 to be on the crank 2.

$v_{26} = \omega\,(12–26) = 16.76 \times 0.032 = 0.536$ m/s (horizontal)

When the point 26 is considered on the link 6, all points on it will have the same velocity as the point 26.

Velocity of the crosshead = <u>0.536 m/s</u>

(b) (i) To find the velocity of rubbing at A (or 23), ω_2 and ω_3 are required.

Locate I-centre 13. Then

$$\omega_3(23–13) = \omega_2\,(23–12)$$

$$\therefore \quad \omega_3 = 16.76 \times \frac{0.17}{0.756}$$

$$= \underline{3.77 \text{rad/s}}$$

ω_3 is clockwise as 13 and 12 lie on the same side of 23.

Velocity of rubbing at $A = (\omega_3 - \omega_2)\, r_a$

$$= (16.76 - 3.77) \times \frac{0.04}{2} = \underline{0.26 \text{ m/s}}$$

(ii) For velocity of rubbing at B, ω_2 and ω_4 are required. ω_3 was calculated above.

$$\omega_4(34 - 14) = \omega_3(34 - 13)$$

$$\omega_4 = 3.77 \times \frac{0.45}{0.51} = 3.33 \text{ rad/s}$$

ω_4 is counter-clockwise as 14 and 13 lie on the opposite sides of 34 and ω_3 is clockwise.

Thus, velocity of rubbing at B can be calculated.

(iii) As ω_4 is known, the velocity of rubbing at C can be known.

Similarly, locate the I-centre 15 and obtain ω_5 from the relation,

$$\omega_5 = \omega_4 \left(\frac{45-14}{45-15}\right)$$ and determine the velocity of rubbing at D.

Torque is determined in the same way as in Example 2.3.

Example 2.25 *The configuration diagram of a wrapping machine is given in Fig. 2.44(a). Determine the velocity of the point P on the bell-crank lever DCP if the crank OA rotates at 80 rad/s.*

Solution ω_2 is known, ω_6 is required.

Locate the I-centre 26 by first finding the 13 and 16 by Kennedy's theorem. [Fig. 2.44(b)].

Then $\omega_6(26 - 16) = \omega_2(26 - 12)$

$$\omega_6 = \omega_2 \times \frac{26-12}{26-16} = 80 \times \frac{47}{383} = 9.82 \text{ rad/s}$$

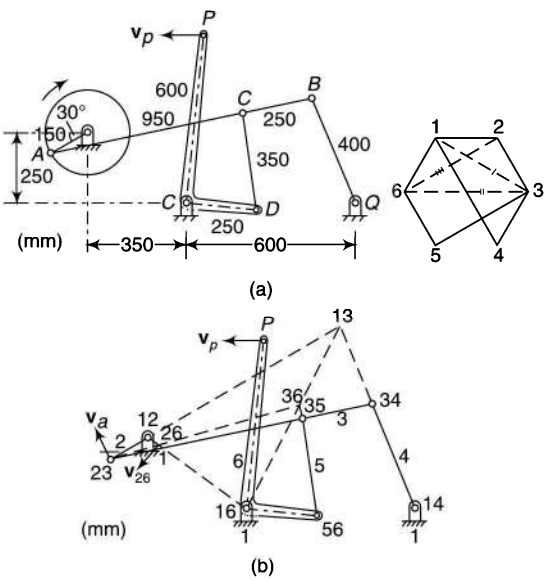

Fig. 2.44

It is counter-clockwise as 16 and 12 lie on the opposite sides of 26 and ω_2 is clockwise.

Thus $v_p = \omega_6 \times (16 - P) = 9.82 \times 600 = \underline{5.89 \text{ m/s}}$

Example 2.26 *Figure 2.45(a) shows the mechanism of a sewing machine needle box. For the given configuration, find the velocity of the needle fixed to the slider D when the crank OA rotates at 40 rad/s.*

Solution Locate the I-centre 26 (Fig. 2.45b).

Consider 26 to lie on the link 2.

$v_{26} = \omega_2 \times (12 - 26) = 40 \times 22.4 = 896$ mm/s vertically downwards.

Consider 26 to lie on the link 6.

Velocity of needle = Velocity of slider = v_{26} = <u>896 mm/s</u>

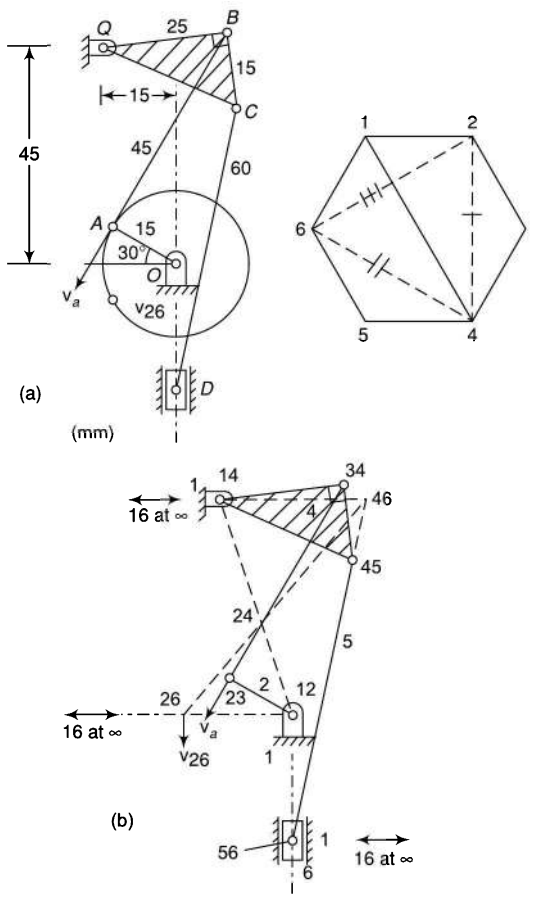

Fig. 2.45

Example 2.27 *Figure 2.46(a) represents a shaper mechanism. For the given configuration, what will be the velocity of the cutting tool at S and the angular velocities of the links AR and RS. Crank OP rotates at 10 rad/s.*

Solution Locate the I-centre 26 [Fig. 2.46(b)]

(i) $v_6 = v_{26} = \omega_2 \times (12 - 26) = 10 \times 0.166 = 1.66$ m/s

(ii) $\omega_4 = \omega_2 \left(\dfrac{24-12}{24-14}\right) = 10 \times \left(\dfrac{183}{430}\right)$

$= 4.25$ rad/s (clockwise)

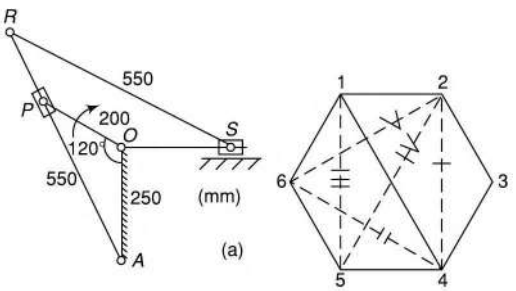

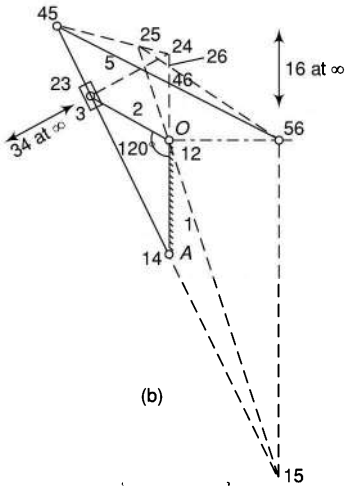

Fig. 2.46

Similarly,

$$\omega_5 = \omega_2 \left(\frac{25-12}{25-15}\right) = 10 \times \left(\frac{210}{1060}\right)$$

$= 1.98$ rad/s (clockwise)

or

$$\omega_5 = \omega_4 \left(\frac{45-14}{45-15}\right) = 4.25\left(\frac{552}{1187}\right) =$$

1.97 rad/s (clockwise)

2.16 CENTRODE

An I-centre is defined only for an instant and changes as the mechanism moves. A *centrode* is the locus of the I-centre of a plane body relative to another plane body for the range of motion specified or during a finite period of time.

There are two types of centrodes:

1. Space Centrode (or Fixed Centrode) of a Moving Body

It is the locus of the I-centre of the moving body relative to the fixed body.

2. Body Centrode (or Moving Centrode) of a Moving Body

It is the locus of the I-centre of the fixed body relative to the movable body, i.e., the locus of the

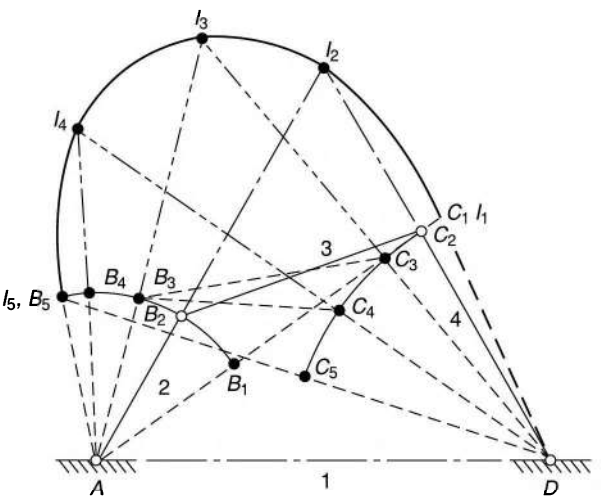

Fig. 2.47

I-centre assuming the movable body to be fixed and the fixed body to be movable.

In a four-link mechanism shown in Fig. 2.47, the link 1 is fixed. The locus of the I-centre of links 1 and 3 over a range of motion of the link 3 is the space centrode. Five positions of the I-centre, i.e., I_1, I_2, I_3, I_4 and I_5 have been obtained and joined with a smooth curve which is the space centrode. If the link 3 is assumed to be fixed and 1 movable, the locus of the I-centre of 1 and 3 is the body centrode. This has been shown in Fig. 2.43 for five positions of the link 1.

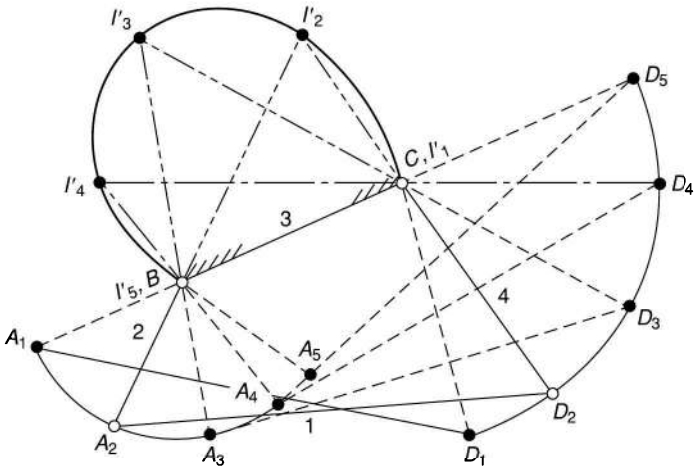

Fig. 2.48

Comparing Figs 2.47 and 2.48, observe that the first position AB_1C_1 (I_1) D of Fig. 2.47 is exactly similar to the first position A_1BC $(I_1')D_1$ of Fig. 2.48. The second positions of the two figures are also similar. Similarly, the third position $AB_3I_3C_3D$ of Fig. 2.47 is exactly similar to the third position $A_3BI_3'CD_3$ of Fig. 2.48, and so on. Thus, Δs $B_2C_2I_2$, $B_3C_3I_3$ and $B_4C_4I_4$ are similar to Δs BCI_2', BCI_3' and BCI_4' respectively. This implies that the positions of the I-centre of Fig. 2.43 can be obtained directly by constructing on B_2C_2 Δs, similar to $B_2C_2I_2$ (already exists), $B_3C_3I_3$ and $B_4C_4I_4$. I_1' lies on C_2 and I_5' on B_2.

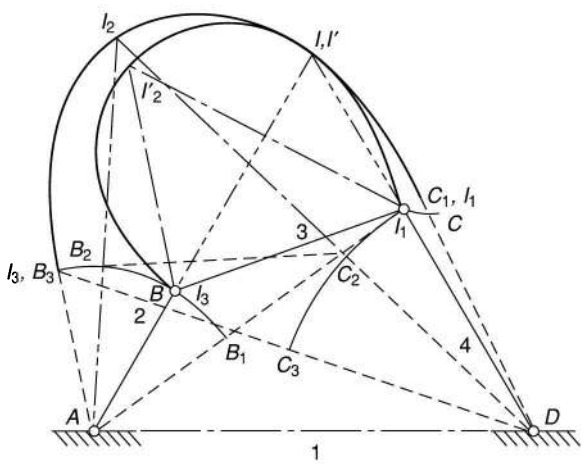

Fig. 2.49

In Fig. 2.49, space and body centrodes of the link 3 relative to 1 have been obtained in the same diagram considering four positions of the link 3.

Figure 2.50 shows the fixed centode (attached to the fixed link 1) and the moving centrode (attached to the moving link 3) with links 2 and 4 removed entirely. Now, if the moving centrode is made to roll on the fixed centrode without slip, the coupler link 3 will exactly traverse the same motion as it had in the original mechanism. This is because a point of rolling contact is always an I-centre in different positions of the link 3.

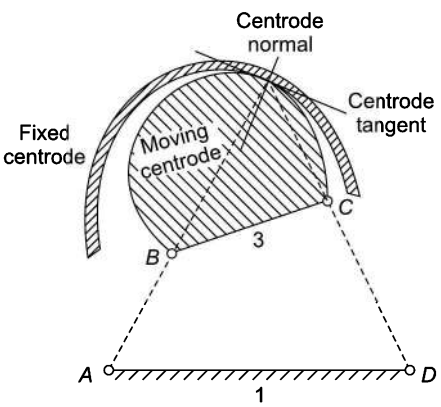

Fig. 2.50

Thus, *the plane motion of a rigid body relative to another rigid body is equivalent to the rolling motion of one centrode on the other.*

The instant point of rolling contact is the instantaneous centre. The common tangent and the common normal to the two centrodes are known as the *centrode tangent* and the *centrode normal* respectively.

Summary

1. A machine or a mechanism, represented by a skeleton or a line diagram, is commonly knows as a *configuration diagram.*
2. Velocity is the derivative of displacement with respect to time and is proportional to the slope of the tangent to the displacement–time curve at any instant.
3. A vector is a line which represents a vector quantity such as force, velocity and acceleration.
4. The magnitude of the instantaneous linear velocity of a point on a rotating body is proportional to its distance from the axis of rotation.
5. The velocity of an intermediate point on any of the links can be found easily by dividing the corresponding velocity vector in the same ratio as the point divides the link.
6. *Velocity images* are found to be very helpful devices in the velocity analysis of complicated linkages. The order of the letters in the velocity image is the same as in the configuration diagram.
7. The angular velocity of a link about one extremity is the same as the angular velocity about the other.
8. The *instantaneous centre of rotation* of a body relative to another body is the centre about which the body rotates at the instant.
9. In a mechanism, the number of I-centres is given by $N = n(n-1)/2$
10. If three plane bodies have relative motion among themselves, their I-centres must lie on a straight line. This is known as *Kennedy's theorem.*
11. When the angular velocity of a link is known and it is required to find the angular velocity of another link, locate their common I-centre. The velocity of this I-centre relative to a fixed third link is the same whether the I-centre is considered on the first or the second link.
12. A *centrode* is the locus of the I-centre of a plane body relative to another plane body for the range of motion specified or during a finite period of time.
13. The plane motion of a rigid body relative to another rigid body is equivalent to the rolling motion of one centrode on the other.

Exercises

1. What is a configuration diagram? What is its use?
2. Describe the procedure to construct the diagram of a four-link mechanism.
3. What is a velocity image? State why it is known as a helpful device in the velocity analysis of complicated linkages.
4. What is velocity of rubbing? How is it found?
5. What do you mean by the term 'coincident points'?
6. What is *instantaneous centre of rotation?* How do you know the number of *instantaneous centres* in a mechanism?
7. State and prove Kennedy's theorem as applicable to instantaneous centres of rotation of three bodies. How is it helpful in locating various instantaneous centres of a mechanism?
8. State and explain *angular-velocity-ratio theorem* as applicable to mechanisms.
9. What do you mean by *centrode* of a body? What are its types?
10. What are fixed centrode and moving centrode? Explain.
11. Show that the plane motion of a rigid body relative to another rigid body is equivalent to the rolling motion of one centrode on the other.
12. In a slider-crank mechanism, the stroke of the slider is one-half the length of the connecting rod. Draw a diagram to give the velocity of the slider at any instant assuming the crankshaft to turn uniformly.
13. In a four-link mechanism, the crank *AB* rotates at 36 rad/s. The lengths of the links are *AB* = 200 mm, *BC* = 400 mm, *CD* = 450 mm and *AD* = 600 mm. *AD* is the fixed link. At the instant when *AB* is at right angles to *AD*, determine the velocity of
    (i) the midpoint of link *BC*
    (ii) a point on the link *CD*, 100 mm from the pin connecting the links *CD* and *AD*.

    (6.55 m/s; 1.45 m/s)
14. For the mechanism shown in Fig. 2.51, determine the velocities of the points *C*, *E* and *F* and the angular velocities of the links *BC*, *CDE* and *EF*.

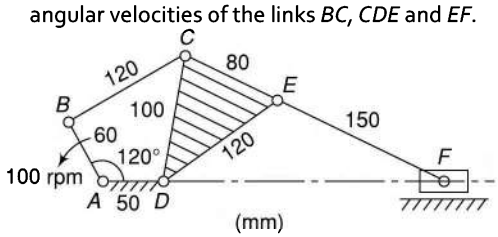

Fig. 2.51

(0.83 m/s; 0.99 m/s; 0.81 m/s; 5.4 rad/s ccw; 8.3 rad/s ccw; 6.33 rad/s ccw)

15. For the four-link mechanism shown in Fig. 2.52, find the linear velocities of sliders *C* and *D* and the angular velocities of links *AC* and *BD*.
(2.1 m/s; 0.38 m/s; 1.14 rad/s; 5.93 rad/s)

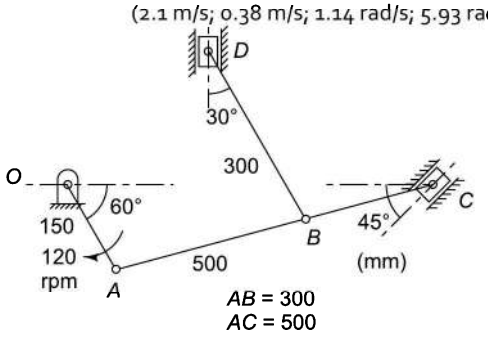

Fig. 2.52

16. An offset slider-crank mechanism is shown in Fig. 2.53. The crank is driven by the slider *B* at a speed of 15 m/s towards the left at given instant. Find the velocity of the offset point *D* on the coupler *AB* and the angular velocities of links *OA* and *AB*.
(18 m/s; 60 rad/s; 16.4 rad/s)

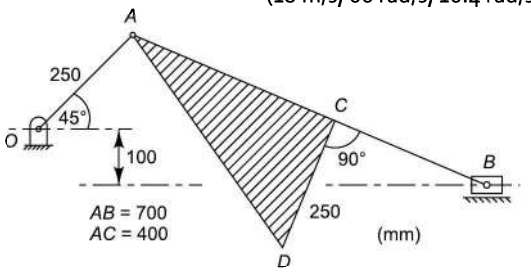

Fig. 2.53

17. A toggle mechanism is shown in Fig. 2.54 along with the dimensions of the links in mm. Find the velocities of the points *B* and *C* and the angular velocities of links *AB*, *BQ* and *BC*. The crank rotates at 50 rpm in the clockwise direction.
(0.13 m/s; 0.105 m/s; 0.74 rad/s ccw; 1.3 rad/s ccw; 1.33 rad/s cw)

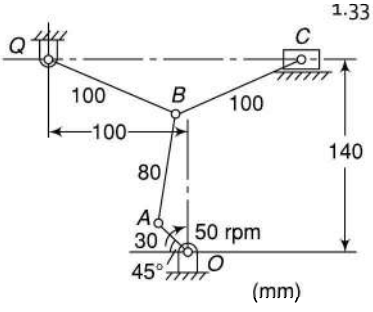

Fig. 2.54

18. In the mechanism shown in Fig. 2.55, the link *OA* has an angular velocity of 10 rad/s. Determine the velocities of points *B*, *C* and *D* and the angular velocities of *ABC* and *QD*.
(2.34 m/s; 4.87 m/s; 4.87 m/s; 1.87 rad/s; 4.06 rad/s)

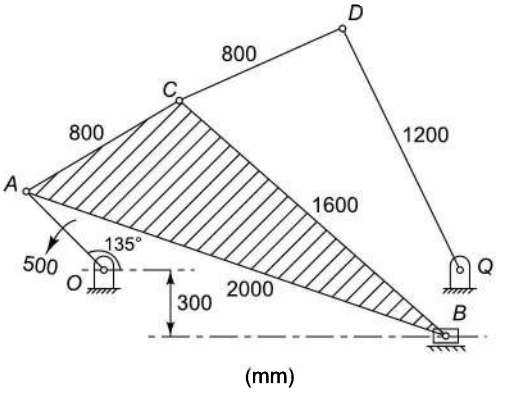

Fig. 2.55

19. Draw the velocity polygon for the mechanism shown in Fig. 2.56. Find the angular velocity of link *AB*. (1.75 rad/s cw)
(*Hint*: Assume the length of vector $\mathbf{v}_{ef}$ and complete the velocity polygon. Determine the velocity scale.)

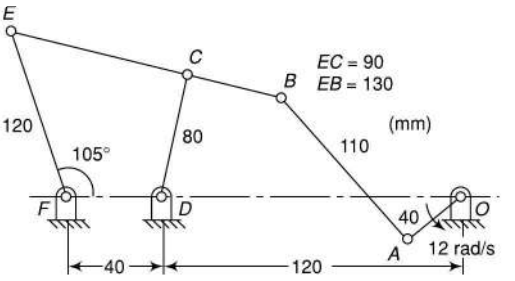

Fig. 2.56

20. For the mechanism shown in Fig. 2.57, determine the angular velocity of link *AB*.
(60.3 rad/s ccw)

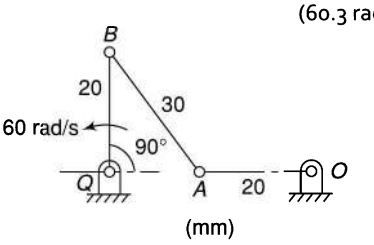

Fig. 2.57

21. In the mechanism shown in Fig. 2.58, *O* and *A* are fixed. *CD* = 200 mm, *OA* = 60 mm, *AC* = 50 mm and *OB*(crank) = 150 mm. *OAD* = 90°. Determine the velocity of the slider *D* for counter-clockwise rotation of *OB* at 80 rpm. (0.32 m/s)

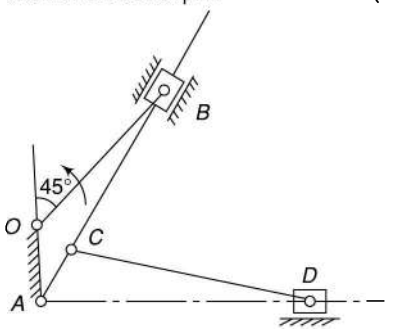

Fig. 2.58

22. The crank *OP* of a crank- and slotted-lever mechanism (Fig. 2.59) rotates at 100 rpm in the counter-clockwise direction. Various lengths of the links are *OP* = 90 mm, *OA* = 300 mm, *AR* = 480 mm and *RS* = 330 mm. The slider moves along an axis perpendicular to *AO* and is 120 mm from *O*. Determine the velocity of the slider when the *AOP* is 135°. Also, find the maximum velocity of the slider during cutting & return strokes.
(0.975 m/s; 1.16 m/s, 2.15 m/s)

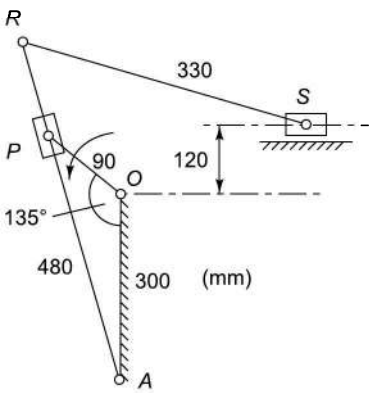

Fig. 2.59

23. For the four-link mechanism shown in Fig. 2.60, find the angular velocities of the links *BC* and *CD* using the instantaneous centre method.
(1.3 rad/s, 3.07 rad/s)

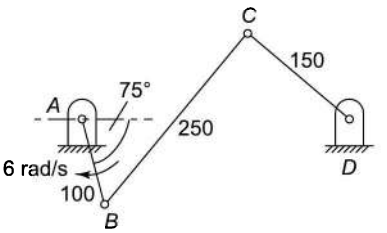

Fig. 2.60

24. Solve Problem 17 (Fig. 2.54) using the I-centre method.
25. Solve Problem 21 (Fig. 2.58) using the I-centre method.
26. Solve Example 2.5 (Fig. 2.13) using the I-centre method.
27. Solve Example 2.11 (Fig. 2.19) using the I-centre method.

3 ACCELERATION ANALYSIS

Introduction

Velocity of a moving body is a vector quantity having magnitude and direction. A change in the velocity requires any of the following conditions to be fulfilled:

- A change in the magnitude only
- A change in the direction only
- A change in both magnitude and direction

The rate of change of velocity with respect to time is known as *acceleration* and it acts in the direction of the change in velocity. Thus acceleration is also a vector quantity. To find linear acceleration of a point on a link, its linear velocity is required to be found first. Similarly, to find the angular acceleration of a link, its angular velocity has to be found. Apart from the graphical method, algebraic methods are also discussed in this chapter. After finding the accelerations, it is easy to find inertia forces acting on various parts of a mechanism or machine.

3.1 ACCELERATION

Let a link OA, of length r, rotate in a circular path in the clockwise direction as shown in Fig. 3.1(a). It has an instantaneous angular velocity ω and an angular acceleration α in the same direction, i.e., the angular velocity increases in the clockwise direction.

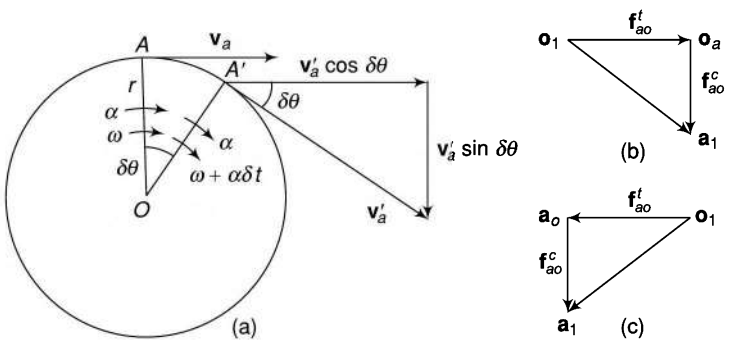

Fig. 3.1

Tangential velocity of A, $v_a = \omega r$

In a short interval of time δt, let OA assume the new position OA' by rotating through a small angle $\delta\theta$.

Angular velocity of OA', $\omega'_a = \omega + \alpha\,\delta t$

Tangential velocity of A', $v'_a = (\omega + \alpha\,\delta t)\,r$

The tangential velocity of A' may be considered to have two components; one perpendicular to OA and the other parallel to OA.

Change of Velocity Perpendicular to OA

Velocity of $A \perp$ to $OA = v_a$

Velocity of $A' \perp$ to $OA = v'_a \cos \delta\theta$

$\therefore$ change of velocity $= v'_a \cos \delta\theta - v_a$

Acceleration of $A \perp$ to $OA = \dfrac{(\omega + \alpha.\delta t)r\cos\delta\theta - \omega r}{\delta t}$

In the limit, as $\delta t \to 0$, $\cos \delta\theta \to 1$

$\therefore$ acceleration of $A \perp$ to $OA = \alpha\, r$

$$= \left(\frac{d\omega}{dt}\right) r \qquad \ldots\left(\alpha = \frac{d\omega}{dt}\right)$$

$$= \frac{dv}{dt} \tag{3.1}$$

This represents the rate of change of velocity in the tangential direction of the motion of A relative to O, and thus is known as the *tangential acceleration* of A relative to O. It is denoted by f^t_{ao}.

Change of Velocity Parallel to OA

Velocity of A parallel to $OA = 0$

Velocity of A' parallel to $OA = v'_a \sin \delta\theta$

$\therefore$ change of velocity $= v'_a \sin \delta\,\theta - 0$

Acceleration of A parallel to $OA = \dfrac{(\omega + \alpha\,\delta t)r\sin\delta\,\theta}{\delta t}$

In the limit, as $\delta t \to 0$, $\sin \delta\theta \to \delta\theta$

Acceleration of A parallel to $OA = \omega r \dfrac{d\theta}{dt}$

$$= \omega\, r.\omega \qquad \ldots\left(\omega = \frac{d\theta}{dt}\right)$$

$$= \omega^2 r \tag{3.2}$$

$$= \frac{v^2}{r} \ldots\ldots \quad (v = \omega\, r) \tag{3.3}$$

This represents the rate of change of velocity along OA, the direction being from A towards O or towards the centre of rotation. This acceleration is known as the *centripetal* or the *radial acceleration* of A relative to O and is denoted by f^c_{ao}.

Figure 3.1(b) shows the centripetal and the tangential components of the acceleration acting on A. Note the following:

1. When $\alpha = 0$, i.e., OA rotates with uniform angular velocity, $f^t_{ao} = 0$ and thus f^c_{ao} represents the total acceleration.
2. When $\omega = 0$, i.e., A has a linear motion, $f^c_{ao} = 0$ and thus the tangential acceleration is the total acceleration.
3. When α is negative or the link OA decelerates, tangential acceleration will be negative or its direction will be as shown in Fig. 3.1(c).

Total acceleration vectors are denoted by small letters with a subscript '1' attached. The meeting point of its components may be denoted by any of the small letters used for the total acceleration with a subscript of the other.

For example, components of the total acceleration $\mathbf{o_1a_1}$ can be written in either of the two ways:

1. $\mathbf{o_1o_a}$ and $\mathbf{o_aa_1}$ as in Fig. 3.1 (b)
2. $\mathbf{o_1a_o}$ and $\mathbf{a_oa_1}$ as in Fig. 3.1 (c)

Note that the centripetal acceleration is denoted by the same letters as are in the configuration diagram but the positions are changed.

3.2 FOUR-LINK MECHANISM

The configuration and the velocity diagrams of a four-link mechanism discussed in Sec. 2.5 have been reproduced in Figs 3.2(a) and (b). Let α = angular acceleration of AB at this instant, assumed positive, i.e., the speed increases in the clockwise direction.

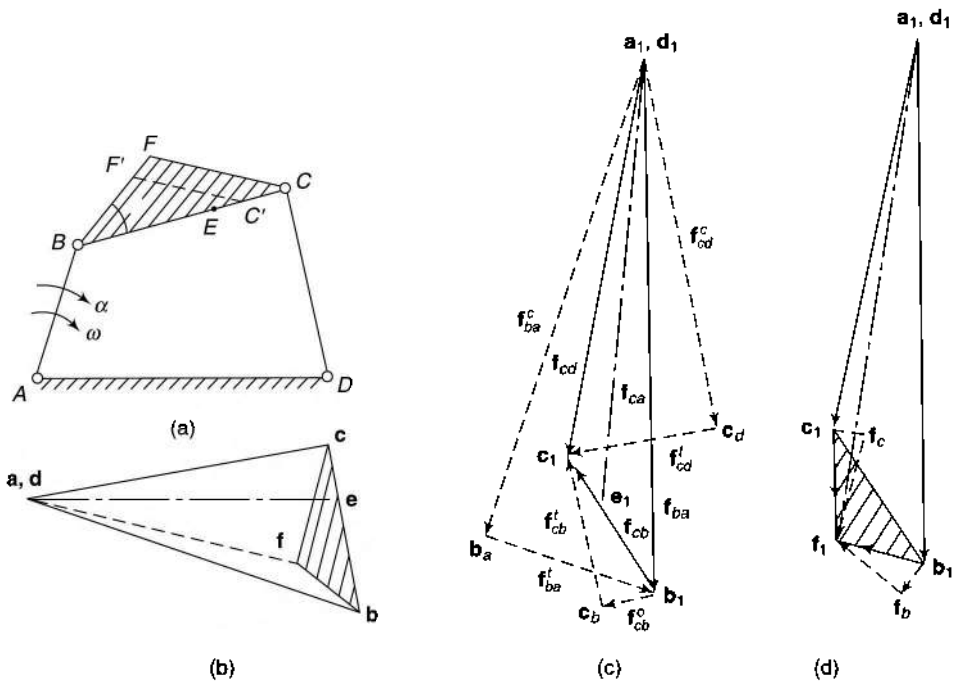

Fig. 3.2

For the construction of the acceleration diagram, a vector equation for the same can be formed similar to the one applied to the velocity diagram.

Acc. of C rel. to A = Acc. of C rel. to B + Acc. of B rel. to A

$$\mathbf{f_{ca}} = \mathbf{f_{cb}} + \mathbf{f_{ba}}$$

or

$$\mathbf{f_{cd}} = \mathbf{f_{ba}} + \mathbf{f_{cb}}$$

or

$$\mathbf{d_1c_1} = \mathbf{a_1b_1} + \mathbf{b_1c_1}$$

Each of these accelerations may have a centripetal and a tangential component. Thus, the equation can be expanded as shown below:

$$\mathbf{f^c_{cd}} + \mathbf{f^t_{cd}} = \mathbf{f^c_{ba}} + \mathbf{f^t_{ba}} + \mathbf{f^c_{cb}} + \mathbf{f^t_{cb}}$$

or

$$\mathbf{d_1\, c_d} + \mathbf{c_d\, c_1} = \mathbf{a_1\, b_a} + \mathbf{b_a\, b_1} + \mathbf{b_1\, c_b} + \mathbf{c_b\, c_1}$$

Set the following vector table:

SN	Vector	Magnitude	Direction	Sense
1.	$\mathbf{f}^c_{ba}$ or $\mathbf{a_1b_a}$	$\dfrac{(\mathbf{ab})^2}{AB}$	$\parallel AB$	$\rightarrow A$
2.	$\mathbf{f}^t_{ba}$ or $\mathbf{b_ab_1}$	$\alpha \times AB$	$\perp AB$ or $\mathbf{a_1\, b_a}$ or $\parallel \mathbf{ab}$	$\rightarrow \mathbf{b}$
3.	$\mathbf{f}^c_{cb}$ or $\mathbf{b_1c_b}$	$\dfrac{(\mathbf{bc})^2}{BC}$	$\parallel BC$	$\rightarrow B$
4.	$\mathbf{f}^t_{cb}$ or $\mathbf{c_bc_1}$	-	$\perp BC$ or $\mathbf{b_1c_b}$	-
5.	$\mathbf{f}^c_{cd}$ or $\mathbf{d_1c_d}$	$\dfrac{(\mathbf{dc})^2}{DC}$	$\parallel DC$	$\rightarrow D$
6.	$\mathbf{f}^t_{cd}$ or $\mathbf{c_dc_1}$	-	$\perp DC$ or $\mathbf{d_1c_d}$	-

Construct the acceleration diagram as follows:

(a) Select the pole point $\mathbf{a_1}$ or $\mathbf{d_1}$.

(b) Take the first vector from the above table, i.e., take $\mathbf{a_1b_a}$ to a convenient scale in the proper direction and sense.

(c) Add the second vector to the first and then the third vector to the second.

(d) For the addition of the fourth vector, draw a line perpendicular to BC through the head $\mathbf{c_b}$ of the third vector. The magnitude of the fourth vector is unknown and $\mathbf{c_1}$ can lie on either side of $\mathbf{c_b}$.

(e) Take the fifth vector from $\mathbf{d_1}$.

(f) For the addition of the sixth vector to the fifth, draw a line perpendicular to DC through the head $\mathbf{c}_d$ of the fifth vector.

The intersection of this line with the line drawn in the step (d) locates the point $\mathbf{c_1}$.

Total acceleration of B = $\mathbf{a_1\, b_1}$

Total acceleration of C relative to $B = \mathbf{b_1\ c_1}$
Total acceleration of $C = \mathbf{d_1\ c_1}$

Angular Acceleration of Links

From the foregoing discussion, it can be observed that the tangential component of acceleration occurs due to the angular acceleration of a link.

Tangential acc. of B rel. to A,

$$\mathbf{f^t_{ba}} = \alpha.AB = \alpha.BA$$

where α = angular acceleration of the link AB

Thus, angular acceleration of a link can be found if the tangential acceleration is known.

Referring to Fig. 3.2,

Tangential acc. of C rel. to B, $\mathbf{f^t_{cb}} = \mathbf{c_b\ c_1}$

i.e., acceleration of C relative to B is in a direction $\mathbf{c_b}$ to $\mathbf{c_1}$ or in a counter-clockwise direction about B.

As $f^t{}_{cb} = \alpha_{cb} CB$

$\therefore$ $\alpha_{cb} = f^t{}_{cb}/CB$

Tangential acc. of B rel. to C, $f^t_{bc} = \mathbf{c_1\ c_b}$

i.e., acceleration of B relative to C is in a direction $\mathbf{c_1}$ to $\mathbf{c_b}$ or in counter-clockwise direction about C with magnitude, $\alpha_{bc} = f^t_{bc} / BC$ which is the same as α_{cb}.

Thus, angular acceleration of a link about one extremity is the same in magnitude and direction as the angular acceleration about the other.

Tangential acc. of C rel. to D, $\mathbf{f^t_{cd}} = \mathbf{c_d\ c_1}$

i.e., C relative to D moves in a direction from $\mathbf{c_d}$ to $\mathbf{c_1}$ or C moves in the counter-clockwise direction about D.

$$\alpha_{cd} = \frac{f^t_{cd}}{CD} = \frac{c_d c_1}{CD}$$

3.3 ACCELERATION OF INTERMEDIATE AND OFFSET POINTS

Intermediate Point

The acceleration of intermediate points on the links can be obtained by dividing the acceleration vectors in the same ratio as the points divide the links. For point E on the link BC (Fig. 3.2),

$$\frac{BE}{BC} = \frac{\mathbf{b_1\ e_1}}{\mathbf{b_1\ c_1}}$$

$\mathbf{a_1\ e_1}$ gives the total acceleration of the point E.

Offset Points

The acceleration of an offset point on a link, such as F on BC (Fig. 3.2), can be determined by applying any of the following methods:

1. Writing the vector equation,

$$\mathbf{f}_{fb} + \mathbf{f}_{ba} = \mathbf{f}_{fc} + \mathbf{f}_{cd}$$

or $$\mathbf{f}_{ba} + \mathbf{f}_{fb} = \mathbf{f}_{cd} + \mathbf{f}_{fc}$$

or $$\mathbf{f_{ba}} + \mathbf{f^c_{fb}} + \mathbf{f^t_{fb}} = \mathbf{f_{cd}} + \mathbf{f^c_{fc}} + \mathbf{f^c_{fc}}$$

or $$\mathbf{a_1b_1 + b_1f_b + f_bf_1 = d_1c_1 + f_1f_c + f_cf_1}$$

The equation can be easily solved graphically as shown in Fig. 3.2(d). $\mathbf{a_1f_1}$ represents the acceleration of F relative to A or D.

2. Writing the vector equation,

$$\mathbf{f}_{fa} = \mathbf{f}_{fb} + \mathbf{f}_{ba}$$
$$= \mathbf{f}_{ba} + \mathbf{f}_{fb}$$
$$= \mathbf{f}_{ba} + \mathbf{f}^c_{fb} + \mathbf{f}^t_{fb}$$

or $$\mathbf{a_1f_1 = a_1b_1 + b_1f_b + f_bf_1}$$

$\mathbf{f}_{ba}$ already exists on the acceleration diagram.

$$\mathbf{f^c_{fb}} = \frac{(bf)^2}{BF}, \| \ FB, \text{ direction towards } B.$$

$$\mathbf{f^t_{fb}} = \alpha_{fb} \times FB = \alpha_{cb} \times FB$$

$$= \frac{\mathbf{f}^t_{cb}}{CB} \times FB \perp \text{ to } FB; \text{ direction } \mathbf{b} \text{ to } \mathbf{f}$$

$\alpha_{fb} = \alpha_{cb}$, because angular acceleration of all the points on the link BCF about the point B is the same (counter-clockwise).

$\mathbf{f}_{fa}$ can be found in this way.

3. ***By acceleration image method*** In the previous chapter, it was mentioned that velocity images are useful in finding the velocities of offset points of links. In the same way, *acceleration images* are also helpful to find the accelerations of offset points of the links. The acceleration image of a link is obtained in the same manner as a velocity image. It can be proved that the triangle $\mathbf{b_1c_1f_1}$ is similar to the triangle BCF in Figs 3.2(d) and (a).

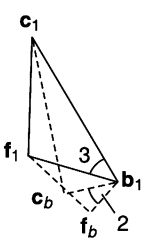

Fig. 3.3

Let ω' = angular velocity of the link BCF

α = angular acceleration of the link BCF

Referring to Figs 3.2(a) and 3.3,

$$\frac{\mathbf{b_1\,f_b}}{\mathbf{b_1\,c_b}} = \frac{\omega'^2 BF}{\omega'^2 BC} = \frac{BF}{BC} = \frac{\alpha BF}{\alpha BC} = \frac{\mathbf{f_b\,f_1}}{\mathbf{c_b\,c_1}}$$

$\mathbf{b}_1\mathbf{f}_b\mathbf{f}_1$ and $\mathbf{b}_1\mathbf{c}_b\mathbf{c}_1$ are two right-angled triangles in which the ratio of the two corresponding sides is the same as proved above. Therefore, the two triangles are similar.

$$\frac{\mathrm{b_1\,f_1}}{\mathrm{b_1\,c_1}} = \frac{BF}{BC} = k$$

Also, $\angle \mathbf{f_b\,b_1\,f_1} = \angle \mathbf{c_b\,b_1\,c_1}$

or $\angle \mathbf{f_b b_1 f_1} = \angle \mathbf{c_b b_1 f_1} = \angle \mathbf{c_b b_1 c_1} - \angle \mathbf{c_b b_1 f_1}$

or $\angle 3 = \angle 2 = \angle 1 \ (\because \mathbf{b_1f_b} \parallel BF, \mathbf{b_1c_b} \parallel BC)$

Now, in Δs $\mathbf{b_1 f_1 c_1}$ and *BFC*,

$$\angle 3 = \angle 1$$

and
$$\frac{\mathbf{b_1 f_1}}{\mathbf{b_1 c_1}} = \frac{BF}{BC} = k$$

Therefore, the two triangles are similar.

Thus, to find the acceleration of an offset point on a link, a triangle similar to the one formed in the configuration diagram can be made on the acceleration image of the link in such a way that the sequence of letters is the same, i.e., $\mathbf{b_1 f_1 c_1}$ is clockwise, so should be *BFC*.

An easier method of making the triangle $\mathbf{b_1 f_1}$ similar to *BFC* is by marking *BC′* on *BC* equal to $\mathbf{b_1 c_1}$ and drawing a line parallel to *CF*, meeting *BF* in *F′*. *BC′F′* is the exact size of the triangle to be made on $\mathbf{b_1 c_1}$. Take $\mathbf{b_1 f_1} = BF'$ and $\mathbf{c_1 f_1} = C'F'$.
Thus, the point $\mathbf{f_1}$ is obtained.

3.4 SLIDER-CRANK MECHANISM

The configuration and the velocity diagrams of a slider-crank mechanism discussed in Sec. 2.8 have been reproduced in Figs. 3.4(a) and (b).

Writing the acceleration equation,

Acc. of *B* rel. to *O* = Acc. of *B* rel. to *A* + Acc. of *A* rel. to *O*

$$\mathbf{f}_{bo} = \mathbf{f}_{ba} + \mathbf{f}_{ao}$$

$$\mathbf{f}_{bg} = \mathbf{f}_{ao} + \mathbf{f}_{ba} = \mathbf{f}_{ao} + \mathbf{f}^c_{ba} + \mathbf{f}^t_{ba}$$

$$\mathbf{g_1 b_1} = \mathbf{o_1 a_1} + \mathbf{a_1 b_a} + \mathbf{b_a b_1}$$

The crank *OA* rotates at a uniform velocity, therefore, the acceleration of *A* relative to *O* has only the centripetal component. Similarly, the slider moves in a linear direction and thus has no centripetal component.

Setting the vector table:

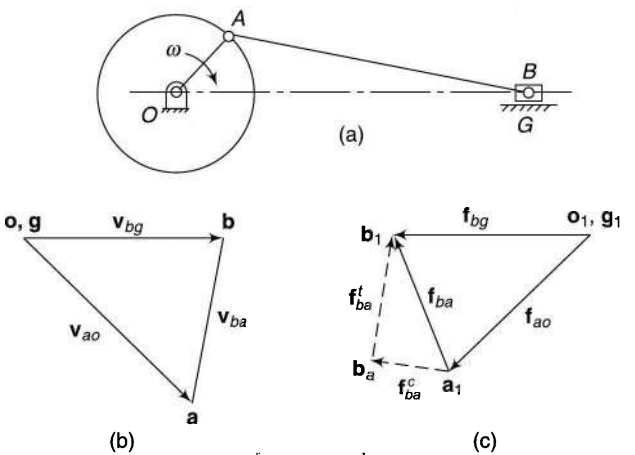

Fig. 3.4

SN	Vector	Magnitude	Direction	Sense
1.	$\mathbf{f}_{ao}$ or $\mathbf{o_1 a_1}$	$\frac{(\mathbf{oa})^2}{OA}$	$\parallel OA$	$\rightarrow$ O
2.	$\mathbf{f}^c_{ba}$ or $\mathbf{a_1 b_a}$	$\frac{(\mathbf{ab})^2}{AB}$	$\parallel AB$	$\rightarrow$ A
3.	$\mathbf{f}^t_{ba}$ or $\mathbf{b_a b_1}$	-	$\perp AB$	-
4.	$\mathbf{f}_{bg}$ or $\mathbf{g_1 b_1}$	-	$\parallel$ to line of motion of *B*	-

Construct the acceleration diagram as follows:

1. Take the first vector $\mathbf{f}_{ao}$.
2. Add the second vector to the first.
3. For the third vector, draw a line ⊥ to *AB* through the head $\mathbf{b_a}$ of the second vector.
4. For the fourth vector, draw a line through $\mathbf{g_1}$ parallel to the line of motion of the slider.

   This completes the velocity diagram.

   Acceleration of the slider $B = \mathbf{o_1\ b_1}$ (or $\mathbf{g_1\ b_1}$)

   Total acceleration of *B* relative to $A = \mathbf{a_1\ b_1}$

Note that for the given configuration of the mechanism, the direction of the acceleration of the slider is opposite to that of the velocity. Therefore, the acceleration is negative or the slider decelerates while moving to the right.

Example 3.1 *Figure 3.5(a) shows the configuration diagram of a four-link mechanism along with the lengths of the links in mm. The link AB has an instantaneous angular velocity of 10.5 rad/s and a retardation of 26 rad/s² in the counter-clockwise direction. Find*

(i) the angular accelerations of the links BC and CD

(ii) the linear accelerations of the points E, F and G

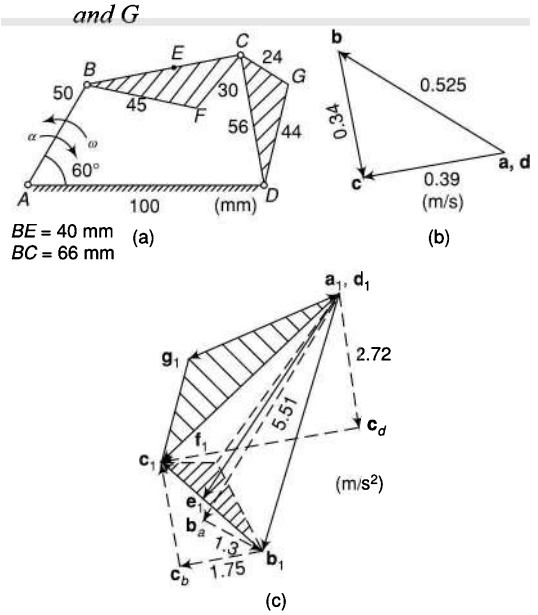

Fig. 3.5

Solution $v_b = 10.5 \times 0.05 = 0.525$ m/s

Complete the velocity diagram [Fig. 3.5(b)] as explained in Example 2.1.

Writing the vector equation for acceleration,

Acc. of *C* rel. to *A* = Acc. of *C* rel. to *B* + Acc. of *B* rel. to *A*

$$\mathbf{f}_{ca} = \mathbf{f}_{cb} + \mathbf{f}_{ba}$$

or $$\mathbf{f}_{cd} = \mathbf{f}_{ba} + \mathbf{f}_{cb}$$

or $$\mathbf{d_1\ c_1 = a_1\ b_1 + b_1\ c_1}$$

Each vector has a centripetal and a tangential component,

$$\therefore \quad \mathbf{f}^c_{cd} + \mathbf{f}^t_{cd} = \mathbf{f}^c_{ba} + \mathbf{f}^t_{ba} + \mathbf{f}^c_{cb} + \mathbf{f}^t_{cb}$$

or $$\mathbf{d_1\ c_d + c_d\ c_1 = b_a + b_a\ b_1 + b_1\ c_b + c_b\ c_1}$$

Set the vector table (Table 1) on the next page.

Draw the acceleration diagram as follows:

(i) Take the pole point $\mathbf{a_1}$ or $\mathbf{d_1}$ [Fig. 3.5(c)].

(ii) Starting from $\mathbf{a_1}$, take the first vector $\mathbf{a_1\ b_a}$.

(iii) To the first vector, add the second vector and to the second vector, add the third.

(iv) The vector 4 is known in direction only. Therefore, through the head $\mathbf{c_b}$ of the third vector, draw a line, ⊥ to *BC*. The point $\mathbf{c_1}$ of the fourth vector is to lie on this line.

(v) Start with $\mathbf{d_1}$ and take the fifth vector $\mathbf{d_1\ c_d}$.

Table 1

SN	Vector	Magnitude (m/s²)	Direction	Sense
1.	$\mathbf{f}^c_{ba}$ or $\mathbf{a_1\,b_a}$	$\frac{(\mathbf{ab})^2}{AB} = \frac{(0.525)^2}{0.05} = 5.51$	$\parallel AB$	$\rightarrow A$
2.	$\mathbf{f}^t_{ba}$ or $\mathbf{b_a b_1}$	$\alpha \times AB = 26 \times 0.05 = 1.3$	$\perp AB$ or $\parallel$ **ab**	$\rightarrow$ **a**
3.	$\mathbf{f}^t_{cb}$ or $\mathbf{b_1 c_b}$	$\frac{(\mathbf{bc})^2}{BC} = \frac{(0.34)^2}{0.066} = 1.75$	$\parallel BC$	$\rightarrow B$
4.	$\mathbf{f}^t_{cb}$ or $\mathbf{b_b c_1}$	-	$\perp B$	-
5.	$\mathbf{f}^c_{cd}$ or $\mathbf{d_1 c_d}$	$\frac{(\mathbf{dc})^2}{DC} = \frac{(0.39)^2}{0.56} = 2.72$	$\parallel DC$	$\rightarrow D$
6.	$\mathbf{f}^t_{cd}$ or $\mathbf{c_d c_1}$	-	$\perp B$	-

(vi) The sixth vector is known in direction only. Draw a line $\perp$ to DC through head $\mathbf{c_d}$ of the fifth vector, the intersection of which with the line in the step (d) locates the point $\mathbf{c_1}$.

(vii) Join $\mathbf{a_1 b_1}$, $\mathbf{b_1 c_1}$ and $\mathbf{d_1 c_1}$.

Now, $\mathbf{a_1 b_1}$ represents the total accelerations of the point B relative to the point A.

Similarly, $\mathbf{b_1 c_1}$ is the total acceleration of C relative to B and $\mathbf{d_1 c_1}$ is the total acceleration of C relative to D.

[Note In the acceleration diagram shown in Fig. 2.5c, the arrowhead has been put on the line joining points $\mathbf{b_1}$ and $\mathbf{c_1}$ in such a way that it represents the vector for acceleration of C relative to B. This satisfies the above equation. As the same equation

$$\mathbf{f}_{cd} = \mathbf{f}_{ba} + \mathbf{f}_{cb}$$

can also be put as

$$\mathbf{f}_{cd} + \mathbf{f}_{bc} = \mathbf{f}_{ba}$$

$$\mathbf{d_1\,c_1 + c_1\,b_1 = a_1\,b_1}$$

This shows that on the same line joining $\mathbf{b_1}$ and $\mathbf{c_1}$, the arrowhead should be marked in the other direction so that the vector represents the acceleration of B relative to C to satisfy the latter equation.

This implies that in case both the ends of a link are in motion, the arrowhead may be put in either direction or no arrowhead is put at all. This is because every time it is not necessary to write the acceleration equation. The acceleration equation is helpful only at the initial stage for better comprehension.]

(i) *Angular accelerations*

$$\alpha_{bc} = \frac{\mathbf{f}^t_{cb} \text{ or } \mathbf{c_b\,c_1}}{BC}$$

$$= \frac{2.25}{0.066} = \underline{34.09 \text{ rad/s}^2}$$

counter-clockwise

$$\alpha_{cd} = \frac{\mathbf{f}^t_{cd} \text{ or } \mathbf{c_d\,c_1}}{CD} = \frac{4.43}{0.056}$$

$= \underline{79.11 \text{ rad/s}^2}$ counter-clockwise

(ii) *Linear accelerations*

(a) Locate point $\mathbf{e_1}$ on $\mathbf{b_1\,c_1}$ such that

$$\frac{\mathbf{b_1 e_1}}{\mathbf{b_1 c_1}} = \frac{BE}{BC}$$

$f_e = \mathbf{a_1 e_1} = \underline{5.15 \text{ m/s}^2}$

(b) Draw $\Delta\ \mathbf{b_1 c_1 f_1}$ similar to $\Delta\ BCF$ keeping in mind that BCF as well as $\mathbf{b_1 c_1 f_1}$ are read in the same order (clockwise in this case).

$f_f = \mathbf{a_1 f_1} = \underline{4.42 \text{ m/s}^2}$

(c) Linear acceleration of the point G can also be found by drawing the acceleration image of the triangle DCG on $\mathbf{d_1 c_1}$ in the acceleration diagram such that the order of the letters remains the same.

$f_g = \mathbf{d_1 g_1} = \underline{3.9 \text{ m/s}^2}$

Example 3.2 *For the configuration of a slider-crank mechanism shown in Fig. 3.6(a), calculate the*

(i) acceleration of the slider at B
(ii) acceleration of the point E
(iii) angular acceleration of the link AB
OA rotates at 20 rad/s counter-clockwise.

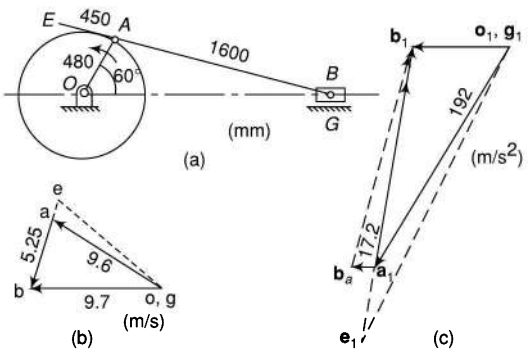

Fig. 3.6

Solution $v_a = 20 \times 0.48 = 9.6$ m/s

Complete the velocity diagram as shown in Fig. 3.6(b).

Writing the vector equation,

$$\mathbf{f_{bo} = f_{ba} + f_{ao}}$$

or $$\mathbf{f_{bg} = f_{ao} + f_{ba}}$$
$$= \mathbf{f^c_{ao} + f^c_{ba} + f^t_{ba}}$$

or $$\mathbf{g_1\, b_1 = o_1\, a_1 + a_1\, b_a + b_a\, b_1}$$

Set the vector table (Table 2) as given below.

The acceleration diagram is drawn as follows:

(a) Take the pole point $\mathbf{o_1}$ or $\mathbf{g_1}$ [Fig. 3.6 (c)].

(b) Take the first vector $\mathbf{o_1 a_1}$ and add the second vector.

(c) For the third vector, draw a line ⊥ to *AB* through the head $\mathbf{b_a}$ of the second vector.

(d) For the fourth vector, draw a line || to the line of motion of the slider through $\mathbf{g_1}$. The intersection of this line with the line drawn in the step (d) locates point $\mathbf{b_1}$.

(e) Join $\mathbf{a_1\, b_1}$.

(i) $f_b = \mathbf{g_1 b_1} = 72$ m/s^2

As the direction of acceleration $\mathbf{f}_b$ is the same as of $\mathbf{v}_b$, this means the slider is accelerating at the instant.

(ii) Locate point $\mathbf{e_1}$ on $\mathbf{b_1 a_1}$ produced such that

$$\frac{\mathbf{b_1\, e_1}}{\mathbf{b_1\, a_1}} = \frac{\mathbf{BE}}{\mathbf{BA}}$$

$f_e = \mathbf{o_1 e_1} = \underline{236 \text{ m/s}^2}$

(iii) $$\alpha_{ab} = \frac{\mathbf{f}^t_{ba}}{AB} = \frac{\mathbf{b_a\, b_1}}{AB} = \frac{167}{1.6}$$

$= \underline{104 \text{ rad/s}^2}$ counter-clockwise

Example 3.3 *Figure 3.7(a) shows configuration of an engine mechanism. The dimensions are the following:*

Crank OA = 200 mm; Connecting rod AB = 600 mm; distance of centre of mass from crank end, AD = 200 mm. At the instant, the crank has an angular velocity of 50 rad/s clockwise and an angular acceleration of 800 rad/s². Calculate the

(i) velocity of D and angular velocity of AB
(ii) acceleration of D and angular acceleration of AB

Table 2

SN	Vector	Magnitude (m/s²)	Direction	Sense
1.	$\mathbf{f^c_{ao}}$ or $\mathbf{o_1\, a_1}$	$\frac{(\mathbf{oa})^2}{OA} = \frac{(9.6)^2}{0.48} = 192$	$\parallel OA$	$\rightarrow O$
2.	$\mathbf{f^c_{ba}}$ or $\mathbf{a_1\, b_a}$	$\frac{(\mathbf{ab})^2}{AB} = \frac{(5.25)^2}{1.60} = 17.2$	$\parallel AB$	$\rightarrow A$
3.	$\mathbf{f^t_{ba}}$ or $\mathbf{b_a\, b_1}$	-	$\perp AB$	-
4.	$\mathbf{f_{bg}}$ or $\mathbf{g_1\, b_1}$	-	|| to slider motion	-

(iii) point on the connecting rod which has zero acceleration at this instant.

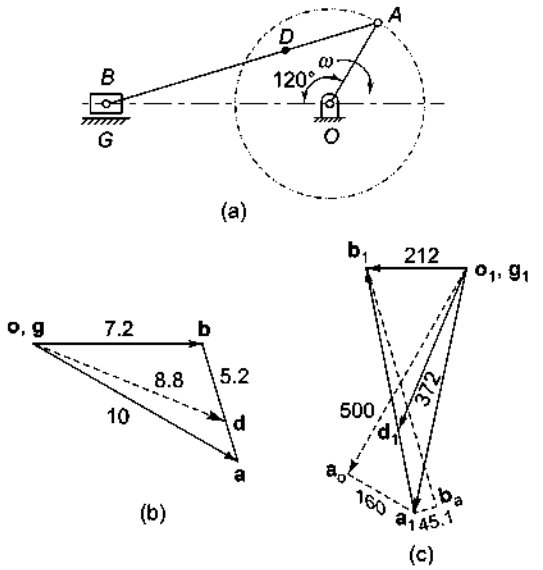

Fig. 3.7

Solution: $v_a = 50 \times 0.2 = 10$ m/s

Complete the velocity diagram as shown in Fig. 3.7 (b).

(i) Velocity of D = **od** = 8.8 m/s

Angular velocity of AB = **ab**/AB = 5.2/ 0.6 = 8.67 rad/s.

Writing the vector equation,

$$\mathbf{f_{bo}} = \mathbf{f_{ba}} + \mathbf{f_{ao}}$$

or $$\mathbf{f_{bg}} = \mathbf{f_{ao}} + \mathbf{f_{ba}}$$

$$= \mathbf{f^c_{ao}} + \mathbf{f^t_{ao}} + \mathbf{f^c_{ba}} + \mathbf{f_l}$$

or $$\mathbf{g_1\, b_1} = \mathbf{o_1\, a_o} + \mathbf{a_o\, a_1} + \mathbf{a_1\, b_a} + \mathbf{b_a\, b_1}$$

Set the vector table (Table 3) as given below.

The acceleration diagram is drawn as follows:

(a) Take the pole point $\mathbf{o_1}$ or $\mathbf{g_1}$ [Fig. 3.7(c)].

(b) Take the first vector $\mathbf{o_1 a_1}$.

(c) Add the second vector to the first and then the third vector to the second.

(d) For the fourth vector, draw a line ⊥ to AB through the head $\mathbf{b_a}$ of the third vector.

(e) For the fifth vector, draw a line || to the line of motion of the slider through $\mathbf{g_1}$. The intersection of this line with the line drawn in step (d) locates point $\mathbf{b_1}$.

(f) Join $\mathbf{a_1\, b_1}$.

(ii) Locate point $\mathbf{d_1}$ on $\mathbf{b_1 a_1}$ produced such that

$$\frac{\mathbf{b_1\, d_1}}{\mathbf{b_1\, a_1}} = \frac{\mathbf{BD}}{\mathbf{BA}}$$

$f_d = \mathbf{o_1 d_1}$ = 372 m/s^2

$$\alpha_{ab} = \frac{\mathbf{f}^t_{ba}}{AB} = \frac{\mathbf{b_a\, b_1}}{AB} = \frac{521}{0.6}$$

= 868 rad/s^2 clokwise

Table 3

SN	Vector	Magnitude (m/s^2)	Direction	Sense
1.	$\mathbf{f^c_{ao}}$ or $\mathbf{o_1\, a_o}$	$\frac{(\mathbf{oa})^2}{OA} = \frac{(10)^2}{0.2} = 500$	$\parallel OA$	$\rightarrow O$
2.	$\mathbf{f^t_{ao}}$ or $\mathbf{a_o\, a_1}$	$\alpha \times AB = 800 \times 0.2 = 160$	$\perp OA$ or $\parallel$ **oa**	$\rightarrow$ **a**
3.	$\mathbf{f^c_{ba}}$ or $\mathbf{a_1\, b_a}$	$\frac{(\mathbf{ab})^2}{AB} = \frac{(5.2)^2}{0.6} = 45.1$	$\parallel AB$	$\rightarrow A$
4.	$\mathbf{f^t_{ba}}$ or $\mathbf{b_a\, b_1}$	-	$\perp AB$	-
5.	$\mathbf{f_{bg}}$ or $\mathbf{g_1\, b_1}$	-	|| to slider motion	-

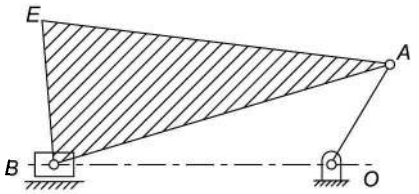

Fig. 3.8

To find the point on the connecting rod which has zero acceleration at this instant, draw triangle *ABE* on the configuration diagram similar to $\mathbf{a_1b_1o_1}$ such that the letters are in the same order, i.e., clockwise (Fig. 3.8). Then *E* is a point on the connecting rod with zero acceleration as it corresponds to zero acceleration of point *O*.

Example 3.4 *In the mechanism shown in Fig. 3.9(a), the crank OA rotates at 210 rpm clockwise. For the given configuration, determine the acceleration of the slider D and angular acceleration of the link CD.*

Solution $v_a = \dfrac{2\pi \times 210}{60} \times 0.1 = 2.2$ m/s

Complete the velocity diagram as follows:

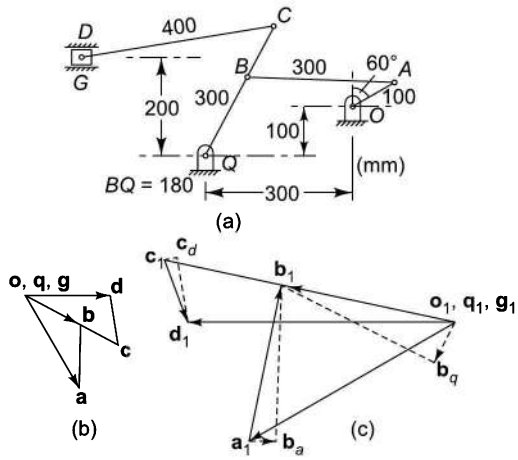

Fig. 3.9

- For the four-link mechanism *OABQ*, complete the velocity diagram as usual [Fig. 3.9(b)].
- Locate point **c** on vector **ob** extended so that $\dfrac{cq}{bq} = \dfrac{CQ}{BQ} = \dfrac{300}{180} = 1.667$
- Draw a horizontal line through **g** for the vector $\mathbf{v}_{dg}$ and a line $\perp CD$ for the vector $\mathbf{v}_{dc}$, the intersection of the two locates the point **d**. Thus the velocity diagram is completed.

Set the vector table (Table 4).

Table 4

S.N.	Vector	Magnitude (m/s²)	Direction	Sense
1.	$\mathbf{f}^c_{ao}$ or $\mathbf{o}_1\ \mathbf{a}_1$	$\dfrac{(\mathbf{oa})^2}{OA} = \dfrac{(2.2)^2}{0.1} = 48.4$	$\parallel OA$	$\rightarrow O$
2.	$\mathbf{f}^c_{ba}$ or $\mathbf{a}_1\ \mathbf{b}_a$	$\dfrac{(\mathbf{ab})^2}{AB} = \dfrac{(1.29)^2}{0.3} = 5.55$	$\parallel AB$	$\rightarrow A$
3.	$\mathbf{f}^t_{ba}$ or $\mathbf{b}_a\ \mathbf{b}_1$	-	$\perp AB$	-
4.	$\mathbf{f}^c_{bq}$ or $\mathbf{q}_1\ \mathbf{b}_q$	$\dfrac{(\mathbf{bq})^2}{BQ} = \dfrac{(1.29)^2}{0.18} = 9.25$	$\parallel BQ$	-
5.	$\mathbf{f}^t_{bq}$ or $\mathbf{b}_q\ \mathbf{b}_1$	-	$\perp BQ$	-
6.	$\mathbf{f}^c_{dc}$ or $\mathbf{c}_1\ \mathbf{c}_d$	$\dfrac{(\mathbf{cd})^2}{CD} = \dfrac{(1.01)^2}{0.4} = 2.55$	$\parallel CD$	$\rightarrow C$
7.	$\mathbf{f}^t_{dc}$ or $\mathbf{c}_d\ \mathbf{d}_1$	-	$\perp CD$	-
8.	$\mathbf{f}_{dg}$ or $\mathbf{g}_1\ \mathbf{d}_1$	-	$\parallel$ to slider motion	-

The acceleration diagram is drawn as follows:

(i) From the pole point $\mathbf{o_1}$ take the first vector $\mathbf{o_1a_1}$ [Fig. 3.9(c)].

(ii) Add the second vector by placing its tail at $\mathbf{a}_1$.

(iii) For the third vector $\mathbf{f^t_{ba}}$, draw a line $\perp AB$ through $\mathbf{b}_a$

(iv) Add the fourth vector by placing its tail at $\mathbf{q}_1$ and to add the fifth vector $\mathbf{f^t_{bq}}$, draw a line $\perp BQ$ through $\mathbf{b}_q$. Intersection of the two lines locates point $\mathbf{b}_1$.

(v) Locate point $\mathbf{c}_1$ on the vector $\mathbf{q_1b_1}$ by extending it so that

$$\frac{\mathbf{c_1q_1}}{\mathbf{b_1q_1}} = \frac{CQ}{BQ} = \frac{300}{180} = 1.667.$$

(vi) Add the vector for centripetal acceleration $\mathbf{f^c_{dc}}$ of link CD by placing its tail at $\mathbf{c}_1$ and for its tangential component, draw a perpendicular line to it.

(vii) For the vector 8, draw a horizontal line through **g**, the intersection of this line with the live drawn in (iii) locates point $\mathbf{d_1}$.

This completes the acceleration diagram.

Acceleration of slider $D = \mathbf{g_1d_1} = 54.4$ m/s

Angular acceleration of link CD,

$$\alpha_{cd} = \frac{\mathbf{f}^t_{cd} \text{ or } \mathbf{c}_d\mathbf{d}_1}{CD} = \frac{13.3}{0.4} = 33.25 \text{ rad/s}^2$$

Example 3.5 *In the mechanism shown in Fig. 3.10(a), the crank OA rotates at 60 rpm. Determine the*

(i) linear acceleration of the slider at B

(ii) angular acceleration of the links AC, CQD and BD

Solution $v_\alpha = \dfrac{2\pi \times 60}{60} \times 0.15 = 0.94$ m/s

Complete the velocity diagram as shown in Fig. 3.10(b).

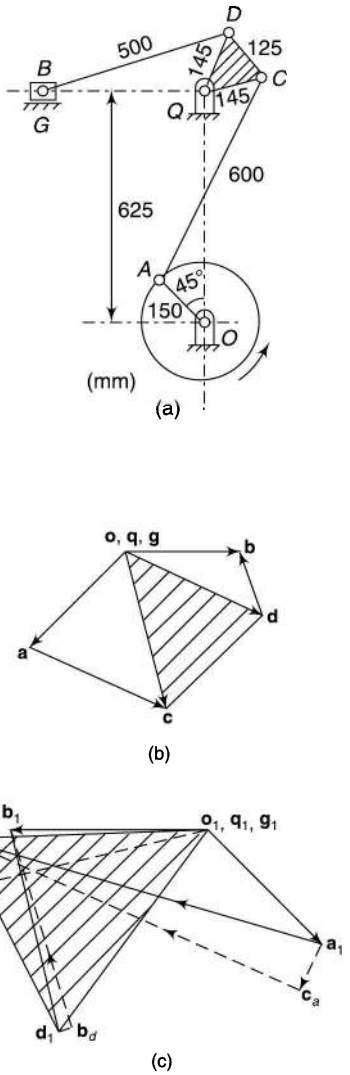

Fig. 3.10

It is a six-link mechanism. First, consider the four-link mechanism $OACQ$ and write the vector equation

$$\mathbf{f}_{co} = \mathbf{f}_{ca} + \mathbf{f}_{ao}$$

or $$\mathbf{f}_{cq} = \mathbf{f}_{ao} + \mathbf{f}_{ca}$$

or $$\mathbf{q_1\,c_1 = o_1\,a_1 + a_1c_1}$$

Links AC and CQ each can have centripetal and tangential components.

$$\mathbf{f}^t_{cq} + \mathbf{f}^t_{cq} = \mathbf{f}^t_{ao} + \mathbf{f}^t_{ca} + \mathbf{f}^t_{ca}$$

or $$\mathbf{q_1\, c_q + c_q\, c_1 = o_1\, a_1 + a_1\, c_a + c_a\, a_1}$$

Set the following vector table (Table 5).

Complete the acceleration vector diagram $\mathbf{o_1 a_1 c_1 q_1}$ as usual [Fig. 3.10(c)].

Draw $\Delta \mathbf{c_1 q_1 d_1}$ similar to ΔCQD such that both are read in the same sense, i.e., clockwise.

Write the vector equation for the slider-crank mechanism QDB,

$$\mathbf{f}_{bq} = \mathbf{f}_{bd} + \mathbf{f}_{dq}$$

or $$\mathbf{f}_{bg} = \mathbf{f}_{dq} + \mathbf{f}_{bd}$$

or $$\mathbf{g_1 b_1 = q_1 d_1 + d_1 b_1}$$

From this equation $\mathbf{q_1 d_1}$ is already drawn in the diagram and $\mathbf{g_1 b_1}$ is a linear acceleration component.

$$\mathbf{f}_{bg} = \mathbf{f}_{dq} + \mathbf{f}^c_{bd} + \mathbf{f}^t_{bd}$$

or $$\mathbf{g_1 b_1 = q_1 d_1 + d_1 b_d + b_d b_1}$$

Set the following vector table (Table 6).

Complete the acceleration vector diagram $\mathbf{q_1\, d_1\, b_1\, g_1}$.

(i) $f_g = \mathbf{g_1\, b_1} = 7$ m/s^2 towards left

As the acceleration $\mathbf{f}_b$ is opposite to $\mathbf{v}_b$, the slider is decelerating.

(ii) $\alpha_{ac} = \dfrac{\mathbf{f}^t_{ca} \text{ or } \mathbf{c}_a\mathbf{c}_1}{AC} = \dfrac{13.8}{0.6} = \underline{23 \text{ rad/s}^2}$

counter-clockwise

Table 5

SN	Vector	Magnitude (m/s^2)	Direction	Sense
1.	$\mathbf{f}_{ao}$ or $\mathbf{o}_1\, \mathbf{a}_1$	$\dfrac{(\mathbf{oa})^2}{OA} = \dfrac{(0.94)^2}{0.15} = 5.92$	$\|\| OA$	$\rightarrow O$
2.	$\mathbf{f}^c_{ca}$ or $\mathbf{a}_1\mathbf{c}_a$	$\dfrac{(\mathbf{ac})^2}{AC} = \dfrac{(1.035)^2}{0.60} = 1.79$	$\|\| AC$	$\rightarrow A$
3.	$\mathbf{f}^t_{ca}$ or $\mathbf{c}_a\mathbf{c}_1$	-	$\perp AC$	-
4.	$\mathbf{f}^c_{cq}$ or $\mathbf{q}_1\mathbf{c}_q$	$\dfrac{(\mathbf{qc})^2}{QC} = \dfrac{(1.14)^2}{0.145} = 8.96$	$\|\| QC$	$\rightarrow Q$
5.	$\mathbf{f}^t_{cq}$ or $\mathbf{c}_q\mathbf{c}_1$	-	$\perp QC$	-

Table 6

SN	Vector	Magnitude (m/s^2)	Direction	Sense
1.	$\mathbf{f}_{dq}$ or $\mathbf{q}_1\, \mathbf{d}_1$	Already drawn	-	-
2.	$\mathbf{f}^c_{bd}$ or $\mathbf{d}_1\mathbf{b}_d$	$\dfrac{(\mathbf{db})^2}{DB} = \dfrac{(0.495)^2}{0.50} = 0.49$	$\|\| DB$	$\rightarrow D$
3.	$\mathbf{f}^t_{bd}$ or $\mathbf{b}_d\, \mathbf{b}_1$	-	$\perp DB$	-
4.	$\mathbf{f}_{bg}$ or $\mathbf{g}_1\, \mathbf{b}_1$	-	$\|\|$ to slider motion	-

$$\alpha_{cqd} = \frac{\mathbf{f}^t_{cq} \text{ or } \mathbf{c}_q\mathbf{c}_1}{QC} = \frac{2.0}{0.145} = \underline{13.8 \text{ rad/s}^2}$$

counter-clockwise

$$\alpha_{bd} = \frac{\mathbf{f}^t_{bd} \text{ or } \mathbf{b}_d\mathbf{b}_1}{BD} = \frac{7.2}{0.5} = \underline{14.4 \text{ rad/s}^2}$$

clockwise

Example 3.6 *In the mechanism shown in Fig. 3.11(a), the crank OA rotates at 210 rpm clockwise. For the given configuration, determine the velocities and accelerations of the sliders B, D and F.*

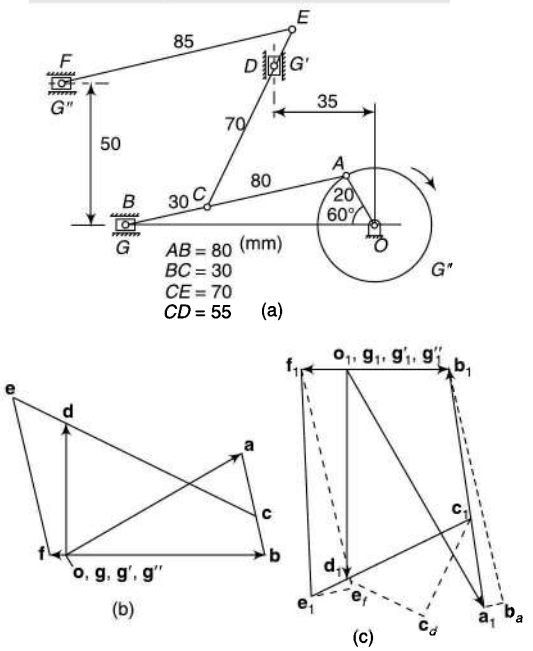

Fig. 3.11

Solution $v_a = \dfrac{2\pi \times 210}{60} \times 0.2 = 4.4$ m/s

Complete the velocity diagram as follows [Fig. 3.11(b)]:

- For the slider-crank mechanism *OAB*, complete the velocity diagram as usual.
- Locate the point **c** on the vector **ab.**
- Draw a vertical line through **g′** for the vector $\mathbf{v}_{dg}'$ and a line $\perp CD$ for the vector $\mathbf{v}_{dc}$, the intersection of the two locates the point **d**.
- Extend the vector **cd** to **e** such that **ce**/**cd** = *CE*/*CD*.
- Draw a horizontal line through **g″** for the vector $\mathbf{v}_{fg}''$ and a line $\perp EF$ for the vector $\mathbf{v}_{fe}$, the intersection of the two locates the point **f.**

Thus, the velocity diagram is completed.

Velocity of slider *B* = **gb** = <u>4.65 m/s</u>

Velocity of slider *D* = **g′d** = <u>2.85 m/s</u>

Velocity of slider *F* = **g″f** = <u>0.35 m/s</u>

Set the vector table (Table 7) as shown in the following page:

The acceleration diagram is drawn as follows:

(i) From the pole point $\mathbf{o_1}$, take the first vector $\mathbf{o_1a_1}$ [Fig. 3.11(c)].

(ii) Add the second vector by placing its tail at $\mathbf{b}_1$.

(iii) For the third vector $\mathbf{f^t_{ba}}$, draw a line $\perp AB$ through $\mathbf{b}_1$ and for the fourth vector a horizontal line through **g**, the intersection of the two lines locates point $\mathbf{b}_1$.

(iv) Locate point $\mathbf{c}_1$ on the vector $\mathbf{a}_1\mathbf{b}_1$.

(v) Add the vector for centripetal acceleration $\mathbf{f^c_{dc}}$ of link *CD* and for its tangential component, draw a perpendicular line to it.

(vi) For the vector 7, draw a vertical line through **g′**, the intersection of this line to the previous line locates the point $\mathbf{d_1}$.

(vii) Join $\mathbf{c}_1\mathbf{d}_1$ and locate point $\mathbf{e}_1$ on its extension.

(viii) Take the vector 8 and draw line $\mathbf{e}_1\mathbf{e}_f$ parallel to *EF* and draw a line for the tangential component.

(ix) For the vector 10, take a horizontal line through $\mathbf{g}_1''$ and the intersection of this with the previous line locates the point $\mathbf{f}_1$.

This completes the acceleration diagram.

Acceleration of slider *B* = $\mathbf{g_1b_1}$ = <u>36 m/s²</u>

Acceleration of slider *D* = $\mathbf{g'_1d_1}$ = <u>74 m/s</u>

Acceleration of slider *F* = $\mathbf{g''_1f_1}$ = <u>16 m/s</u>

Table 7

SN	Vector	Magnitude (m/s^2)	Direction	Sense
1.	$\mathbf{f^c_{ao}}$ or $\mathbf{o_1a_1}$	$\frac{(\mathbf{oa})^2}{OA} = \frac{(4.4)^2}{0.2} = 96.8$	$\|\| OA$	$\rightarrow O$
2.	$\mathbf{f^c_{ba}}$ or $\mathbf{a_1b}_a$	$\frac{(\mathbf{ab})^2}{AB} = \frac{(2.26)^2}{0.8} = 6.4$	$\|\| AB$	$\rightarrow A$
3.	$\mathbf{f^t_{ba}}$ or $\mathbf{b}_a\mathbf{b_1}$	-	$\perp AB$	-
4.	$\mathbf{f_{bg}}$ or $\mathbf{g_1b_1}$		|| to slider motion	-
5.	$\mathbf{f^c_{dc}}$ or $\mathbf{c_1c_d}$	$\frac{(\mathbf{cd})^2}{CD} = \frac{(4.58)^2}{0.55} = 38.1$	$\|\| CD$	$\rightarrow C$
6.	$\mathbf{f^t_{dc}}$ or $\mathbf{c_dd_1}$	-	$\perp CD$	-
7.	$\mathbf{f_{dg}}'$ or $\mathbf{g_1'd_1}$	-	|| to slider motion	-
8.	$\mathbf{f^c_{fe}}$ or $\mathbf{e_1e_f}$	$\frac{(\mathbf{ef})^2}{EF} = \frac{(3.49)^2}{0.85} = 14.3$	$\|\| EF$	$\rightarrow A$
9.	$\mathbf{f^c_{fe}}$ or $\mathbf{e_f\ f_1}$	-	$\perp EF$	-
10.	$\mathbf{f_{fg''}}$ **or** $\mathbf{g_{1''}f_1}$	-	|| to slider motion	-

Example 3.7 *In the toggle mechanism shown in Fig. 3.12(a), the crank OA rotates at 210 rpm counter-clockwise increasing at the rate of 60 rad/s^2. For the given configuration, determine*

(a) velocity of slider D and the angular velocity of link BD

(b) acceleration of slider D and the angular acceleration of link BD

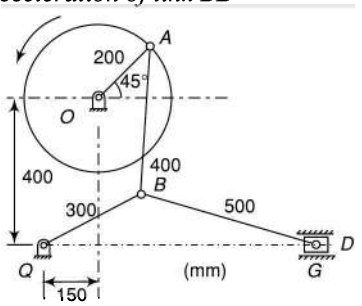

(a)

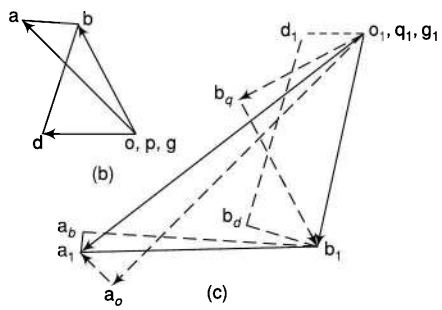

Fig. 3.12

Solution $v_a = \frac{2\pi \times 210}{60} \times 0.2 = 4.4$ m/s

Complete the velocity diagram as follows [Fig. 3.12(b)]:

- Take the vector **oa** representing $\mathbf{v}_a$.
- Draw lines **ab** $\perp AB$ through **a** and **qb**

$\perp QB$ through **q**, the intersection locates the point **b**.

- Draw the line **bd** $\perp BD$ through **b** and a horizontal line through **q** or **g** to represent the line of motion of the slider D. The intersection of the two lines locates the point **d**.

Velocity of slider D = **gd** = 2.54 m/s

Angular velocity of BD = **bd**/BD = 3.16/ 0.5 = 6.32 rad/s.

Set the following vector table (Table 8):

For the acceleration diagram, adopt the following steps:

(i) Take the pole point $\mathbf{o_1}$ or $\mathbf{c_1}$ [Fig. 3.12(c)].

(ii) Starting from $\mathbf{o_1}$, take the first vector $\mathbf{o_1a_0}$. To the first vector, add the second vector. Thus, the total acceleration $\mathbf{o_1a_1}$ of A relative to O is obtained.

(iii) Take the third vector and place its tail at $\mathbf{q}_1$ and through its head draw a perpendicular line to have the fourth vector.

(iv) Take the fifth vector and place its tail at $\mathbf{a_1}$. Through its head draw a perpendicular line to add the sixth vector.

(v) The intersection of lines of the fourth and sixth vectors locates the point $\mathbf{b}_1$.

(vi) Take the seventh vector and put its tail at $\mathbf{b}_1$. Through its head, draw a perpendicular line to add the eighth vector.

(vii) For the ninth vector, draw a line through $\mathbf{g}_1$ parallel to the slider motion.

(viii) The intersection of lines of the eighth and ninth vectors locates the point $\mathbf{d}_1$.

Acceleration of slider D = $\mathbf{g}_1\mathbf{d}_1$ =16.4 m/s^2

Angular acceleration of BD = $\mathbf{b}_d\mathbf{d}_1/BD$ = 5.46/0.5 = 109.2 rad/s^2.

Table 8

SN	Vector	Magnitude (m/s^2)	Direction	Sense
1.	$\mathbf{f^c_{ao}}$ or $\mathbf{o_1a_0}$	$\frac{(oa)^2}{OA} = \frac{(4.4)^2}{0.2} = 96.8$	$\|\| OA$	$\rightarrow O$
2.	$\mathbf{f^t_{ao}}$ or $\mathbf{a_0a_1}$	$\alpha \times OA = 60 \times 0.2 = 12$	$\perp OA$	-
3.	$\mathbf{f}^c_{bq}$ or $\mathbf{q_1b_q}$	$\frac{(bq)^2}{BQ} = \frac{(3.39)^2}{0.3} = 38.3$	$\|\| BQ$	$\rightarrow Q$
4.	$\mathbf{f}^t_{bq}$ or $\mathbf{b_qb_1}$	-	$\perp BQ$	-
5.	$\mathbf{f}^c_{ba}$ or $\mathbf{a_1a_b}$	$\frac{(ab)^2}{AB} = \frac{(1.54)^2}{0.4} = 5.93$	$\|\| AB$	$\rightarrow A$
6.	$\mathbf{f}^t_{ba}$ or $\mathbf{a_ba_1}$	-	$\perp AB$	-
7.	$\mathbf{f}^c_{db}$ or $\mathbf{b_1b_d}$	$\frac{(bd)^2}{BD} = \frac{(3.16)^2}{0.5} = 20$	$\|\| BD$	$\rightarrow B$
8.	$\mathbf{f}^t_{db}$ or $\mathbf{b_1d_1}$	-	$\perp BD$	-
9.	$\mathbf{f}^t_{dg}$ or $\mathbf{g_1d_1}$	-	$\|\|$ to slider motion	-

Example 3.8 *An Andrew variable-stroke engine mechanism is shown in Fig. 3.13(a). The crank OA rotates at 100 rpm. Find the*

(i) linear acceleration of the slider at D

(ii) angular acceleration of the links AC, BC and CD.

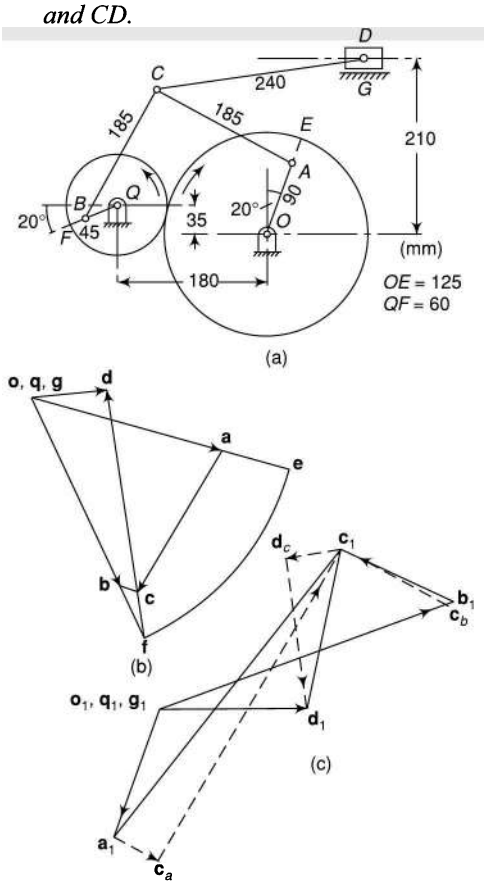

Fig. 3.13

Solution $v_a = \dfrac{2\pi \times 100}{60} \times 0.09 = 0.94$ m/s

Complete the velocity diagram as shown in Fig. 3.13(b). The procedure is explained in Example 2.10.

Write the acceleration vector equation noting that the cranks *OA* and *QB* rotate at different uniform speeds.

For the linkage *OACBQ*,

$\mathbf{f}_{ca} + \mathbf{f}_{ao} = \mathbf{f}_{cb} + \mathbf{f}_{bq}$ or $\mathbf{f}_{ao} + \mathbf{f}_{ca} = \mathbf{f}_{bq} + \mathbf{f}_{cb}$

$\mathbf{o_1\, a_1 + a_1\, c_1 = q_1\, b_1 + b_1\, c_1}$

Links *AC* and *BC* each have two components,

$\mathbf{f}_{ao} + \mathbf{f}^{c}_{ca} + \mathbf{f}^{t}_{ca} = \mathbf{f}_{bq} + \mathbf{f}^{c}_{cb} + \mathbf{f}^{t}_{cb}$

or $\mathbf{o_1\, a_1 + a_1\, c_a + c_a\, c_1 = q_1\, b_1 + b_1\, c_b + c_b\, c_1}$

Set the following vector table (Table 9).

Draw the acceleration diagram as follows:

(a) From the pole point $\mathbf{o_1}$, take the first vector and add the second vector to it as shown in Fig. 3.13 (c).

(b) Through the head $\mathbf{c_a}$ of the second vector, draw a line ⊥ to *AC* for the third vector.

(c) From $\mathbf{q_1}$ (or $\mathbf{o_1}$), take the fourth vector and add the fifth vector to it.

(d) Through the head $\mathbf{c_b}$ of the fifth vector, draw a line ⊥ to *BC* for the sixth vector.

The intersection of the lines drawn in steps (b) and (d) locates the point $\mathbf{c_1}$.

Now,

$\mathbf{f}_{do} = \mathbf{f}_{dc} + \mathbf{f}_{co}$ or $\mathbf{f}_{dg} = \mathbf{f}_{co} + \mathbf{f}_{dc}$

Since $\mathbf{f}_{dc}$ has two components,

$\mathbf{f}_{dg} = \mathbf{f}_{co} + \mathbf{f}^{c}_{dc} + \mathbf{f}^{t}_{dc}$

or $\mathbf{g_1\, d_1 = o_1\, c_1 + c_1\, d_c + d_c\, d_1}$

Set the following vector table (Table 10).

From $\mathbf{c_1}$ draw the second vector and draw a line ⊥ to *CD* through the head of the second vector. Draw a line parallel to the line of motion of the slider through $\mathbf{g_1}$. Thus, the point $\mathbf{d_1}$ is located.

(i) $f_d = \mathbf{o_1 d_1} = \underline{10.65 \text{ m/s}^2}$

(ii) $\alpha_{ac} = \dfrac{\mathbf{f}^{t}_{ca} \text{ or } \mathbf{c_a c_1}}{AC} = \dfrac{26.4}{0.185} = \underline{142.7 \text{ rad/s}^2}$

clockwise

$\alpha_{bc} = \dfrac{\mathbf{f}^{t}_{cb} \text{ or } \mathbf{c_b\, c_1}}{BC} = \dfrac{8.85}{0.185} = \underline{47.8 \text{ rad/s}^2}$

counter-clockwise

$\alpha_{cd} = \dfrac{\mathbf{f}^{t}_{dc} \text{ or } \mathbf{d_c\, d_1}}{CD} = \dfrac{11.2}{0.24} = \underline{46.7 \text{ rad/s}^2}$

clockwise

Table 9

SN	Vector	Magnitude (m/s²)	Direction	Sense
1.	$\mathbf{f}_{ao}$ or $\mathbf{o}_1\,\mathbf{a}_1$	$\frac{(\mathbf{oa})^2}{OA} = \frac{(0.94)^2}{0.09} = 9.87$	$\|\| OA$	$\rightarrow O$
2.	$\mathbf{f}^c_{ca}$ or $\mathbf{a}_1\,\mathbf{c}_a$	$\frac{(\mathbf{ac})^2}{AC} = \frac{(0.81)^2}{0.185} = 3.55$	$\|\| AC$	$\rightarrow A$
3.	$\mathbf{f}^t_{ca}$ or $\mathbf{c}_a\mathbf{c}_1$	-	$\perp AC$	-
4.	$\mathbf{f}_{bq}$ or $\mathbf{q}_1\mathbf{b}_1$	$\frac{(\mathbf{qb})^2}{QB} = \frac{(1.0)^2}{0.045} = 22.2$	$\|\| QB$	$\rightarrow Q$
5.	$\mathbf{f}^c_{cb}$ or $\mathbf{b}_1\mathbf{c}_1$	$\frac{(\mathbf{bc})^2}{BC} = \frac{(0.12)^2}{0.185} = 0.078$	$\|\| BC$	$\rightarrow B$
6.	$\mathbf{f}^t_{cb}$ or $\mathbf{c}_b\mathbf{c}_a$	-	$\perp BC$	-

Table 10

SN	Vector	Magnitude	Direction	Sense
1.	$\mathbf{f}_{co}$ or $\mathbf{o}_1\,\mathbf{c}_1$	Already drawn	-	-
2.	$\mathbf{f}^c_{dc}$ or $\mathbf{c}_1\,\mathbf{d}_c$	$\frac{(\mathbf{cd})^2}{CD} = \frac{(1.0)^2}{0.24} = 4.17$	$\|\| CD$	$\rightarrow C$
3.	$\mathbf{f}^t_{dc}$ or $\mathbf{d}_c\,\mathbf{d}_1$	-	$\perp CD$	-
4.	$\mathbf{f}_{dg}$ or $\mathbf{g}_1\,\mathbf{d}_1$	-	$\|\|$ to motion of D	-

3.5 CORIOLIS ACCELERATION COMPONENT

It is seen that the acceleration of a moving point relative to a fixed body (fixed coordinate system) may have two components of acceleration; the centripetal and the tangential. However, in some cases, the point may have its motion relative to a moving body (moving coordinate) system, for example, motion of a slider on a rotating link. The following analysis is made to investigate the acceleration at that point.

Let a link AR rotate about a fixed point A on it (Fig. 3.14). P is a point on a slider on the link.

At any given instant,

Let ω = angular velocity of the link

α = angular acceleration of the link

v = linear velocity of the slider on the link

f = linear acceleration of the slider on the link

r = radial distance of point P on the slider

In a short interval of time δt, let $\delta\theta$ be the angular displacement of the link and δr, the radial displacement of the slider in the outward direction.

After the short interval of time δt, let

$\omega' = \omega + \alpha\delta t$ = angular velocity of the link
$v' = v + f.\delta t$ = linear velocity of the slider on the link
$r' = r + \delta r$ = radial distance of the slider

Acceleration of *P* Parallel to *AR*

Initial velocity of P along $AR = v = v_{pq}$
Final velocity of P along $AR = v'\cos\delta\theta - \omega' r' \sin\delta\theta$
Change of velocity along $AR = (v'\cos\delta\theta - \omega' r' \sin\delta\theta) - v$
Acceleration of P along AR

$$= \frac{(v + f\delta t)\cos\delta\theta - (\omega + \alpha\delta t)(r + \delta r)\sin\delta\theta - v}{\delta t}$$

In the limit, as $\delta t \to 0$
$\cos\delta\theta \to 1$ and $\sin\delta\theta \to \delta\theta$

$$\text{Acceleration of } P \text{ along } AR = f - \omega r\frac{d\theta}{dt}$$
$$= f - \omega rw = f - \omega^2 r$$
$$= \text{Acc. of slider–centripetal. acc.}$$

This is the acceleration of P along AR in the radially outward direction. f will be negative if the slider has deceleration while moving in the outward direction or has acceleration while moving in the inward direction.

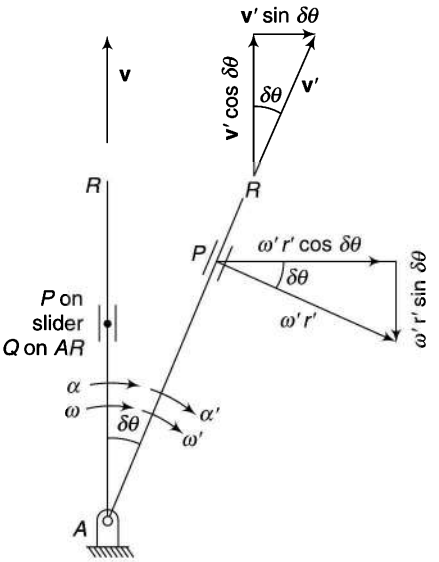

Fig. 3.14

Acceleration of P Perpendicular to *AR*

Initial velocity of $P \perp$ to $AR = \omega r$
Final velocity of $P \perp$ to $AR = v' \sin\delta\theta + \omega' r' \cos\delta\theta$
Change of velocity $\perp$ to $AR = (v'\sin\delta\theta + \omega' r'\cos\delta\theta) - \omega r$
Acceleration of $P \perp$ to AR

$$= \frac{(v + f\delta t)\cos\delta\theta - (\omega + \alpha\delta t)(r + \delta r)\cos\delta\theta - \omega r}{}$$

In the limit, as $\delta t \to 0$

$$\cos\delta\theta \to 1 \quad \text{and} \quad \sin\delta\theta \to \delta\theta$$

$$\text{Acceleration of } P \perp \text{ to } AR = v\frac{d\theta}{dt} + \omega\frac{dr}{dt} + ra$$
$$= v\omega + \omega v + r\alpha = 2\omega v + r\alpha$$
$$= 2\omega v + \text{tangential acc.}$$

This is the acceleration of P perpendicular to AR. The component $2\omega.v$ is known as the *Coriolis acceleration component*. It is positive if both ω and v are either positive or negative.

Thus, the coriolis component is positive if the

- link AR rotates clockwise and the slider moves radially outwards
- link rotates counter-clockwise and the slider moves radially inwards.

  Otherwise, the Coriolis component will be negative.

These observations can be summarised into the following rule:

The direction of the Coriolis acceleration component is obtained by rotating the radial velocity vector **v** through 90° in the direction of rotation of the link.

Let Q be a point on the link AR immediately beneath the point P at the instant. Then

acc. of P = acceleration of P || to AR + acceleration of $P \perp$ to AR

$$f_{pa} = (f - \omega^2 r) + (2\omega v + r\alpha)$$
$$= f + (r\alpha - \omega^2 r) + 2\omega v$$

= acc. of P rel. to Q + acc. of Q rel. to A + Coriolis acceleration component

$$= f'_{pq} + f_{qa} + f^{cr} \tag{3.4}$$

In the above equation, f'_{pq} is the acceleration which an observer stationed on link AR would observe for the slider.

In Fig. 3.5(a), the acceleration of the point G relative to the link AD (the acceleration to be reported by a person stationed on the link AD) does not involve the Coriolis component though the link CD has angular motion since G is a fixed point on the link CD. Now in case it is desired to have the acceleration of G relative to the link BC (the acceleration to be reported by a person stationed on the link BC), the Coriolis component of acceleration is involved because now relative to the link BC, G is a moving point and the link BC also has angular velocity. (See Example 3.16).

Remember that Coriolis component exists only if there are two coincident points which have

- linear relative velocity of sliding, and
- angular motion about fixed finite centres of rotation.

Sometimes for the sake of simplicity, it is convenient to associate the Coriolis acceleration component f^{cr} with f'_{pq} and writing the equation in the form,

$$f_{pa} = f_{pq} + f_{qa}$$

where

$$f_{pa} = f'_{pq} + f^{cr} \tag{3.5}$$

This makes solving problems quite easy.

3.6 CRANK AND SLOTTED-LEVER MECHANISM

The configuration and the velocity diagrams of a slotted-lever mechanism have been shown in Figs 3.15(a) and (b) respectively. The crank OP rotates at uniform angular velocity of ω rad/s clockwise.

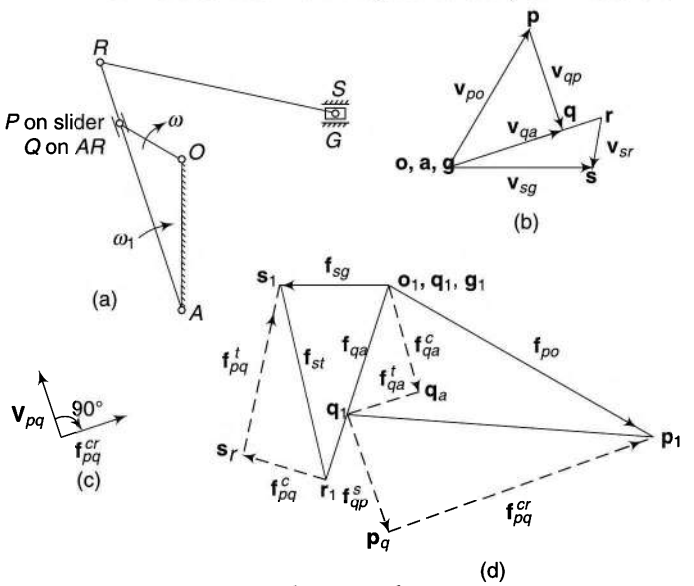

Fig. 3.15

Writing the vector equation,

$$\mathbf{f}_{pa} = \mathbf{f}_{pq} + \mathbf{f}_{qa} \qquad \text{or} \qquad \mathbf{f}_{qo} = \mathbf{f}_{qp} + \mathbf{f}_{po}$$

Any of these equations can be solved graphically. Both will lead to the same acceleration diagram except for the direction of the vectors $\mathbf{f}_{pq}$ and $\mathbf{f}_{qp}$.

Considering the first equation,

$$\mathbf{f}_{pa} = \mathbf{f}_{pq} + \mathbf{f}_{qa} \qquad \text{or} \qquad \mathbf{f}_{po} = \mathbf{f}_{qa} + \mathbf{f}_{pq}$$

$$= f^{c}_{qa} + f^{t}_{qa} + f^{s}_{pq} + f^{cr}_{pq}$$

or $$\mathbf{o_1\, p_1 = a_1\, q_a + q_a\, q_1 + q_1\, p_q + p_q\, p_1}$$

Set the following vector table (Table 11):

The direction is obtained by rotating the vector $\mathbf{v}_{pq}$ (or qp) through 90° in the direction of ω_1 (clockwise in the present case).

Construct the acceleration diagram as follows [Fig. 3.15(c)]:

1. Take the first vector f_{po} which is completely known.
2. Take the second vector from the point a_1 (or o_1). This vector is also completely known.
3. Only the direction of the third vector f^{t}_{qa} is known. Draw a line ⊥ to AQ through the head $\mathbf{q}_a$ of the second vector.
4. As the head of the third vector is not available, the fourth vector cannot be added to it.
   Take the last vector f^{cr}_{pq} which is completely known. Place this vector in the proper direction and sense so that $\mathbf{p}_1$ becomes the head of the vector. In Fig. 3.15(d), $\mathbf{p}_q$ cannot lie on the right side of $\mathbf{p}_3$ because then the vector would become $\mathbf{p}_1\, \mathbf{p}_q$ and not $\mathbf{p}_q\, \mathbf{p}_1$.
5. For the fourth vector, draw a line parallel to AR through the point $\mathbf{p}_q$ of the fifth vector.
   The intersection of this line with the line drawn in the step 3 locates the point $\mathbf{q}_1$.
   Total acc. of P rel. to Q, $\mathbf{f}_{pq} = \mathbf{q}_1\, \mathbf{p}_1$
   Total acc. of Q rel. to A, $\mathbf{f}_{qa} = \mathbf{a}_1\, \mathbf{q}_1$
   The acceleration of R relative to A is given on $\mathbf{a}_1\, \mathbf{q}_1$ produced such that

$$\frac{\mathbf{a}_1\mathbf{r}_1}{\mathbf{a}_1\mathbf{q}_1} = \frac{AR}{AQ}$$

Table 11

SN	Vector	Magnitude	Direction	Sense
1.	$\mathbf{f}_{po}$ or $\mathbf{o_1\, p_1}$	$\omega \times OP$	$\parallel OP$	$\rightarrow O$
2.	$\mathbf{f}^{c}_{qa}$ or $\mathbf{a}_1\, \mathbf{q}_a$	$\frac{(\mathbf{aq})^2}{AQ}$	$\parallel AQ$	$\rightarrow A$
3.	$\mathbf{f}^{t}_{qa}$ or $\mathbf{q}_a\, \mathbf{q}_1$	-	$\perp AQ$ or $\mathbf{a_1\, q_a}$	-
4.	$\mathbf{f}^{s}_{pq}$ or $\mathbf{q}_1\, \mathbf{p}_q$	-	$\parallel AR$	-
5.	$\mathbf{f}^{cr}_{pq}$ or $\mathbf{p}_q\, \mathbf{p}_1$	Coriolis component*	$\perp AR$	Refer*

* $f^{cr}_{pq} = 2\omega_1 v_{pq}$ (ω_1 = angular vel. of AR) $= 2\left(\frac{\mathbf{aq}}{AQ}\right) qp$

Note that in the present case, the sliding acceleration $\mathbf{a_1q_a}$ is in the opposite direction to the sliding velocity **qp**. This signifies that the slider is decelerating.

Also,

$$\mathbf{f}_{sa} = \mathbf{f}_{sr} + \mathbf{f}_{ra}$$
$$\mathbf{f}_{sg} = \mathbf{f}_{ra} + \mathbf{f}_{sr}$$
$$= \mathbf{f}_{ra} + \mathbf{f}^{c}_{sr} + \mathbf{f}^{t}_{sr}$$
$$\mathbf{g_1\, s_1 = a_1\, r_1 + r_1\, s_r + s_r\, s_1}$$

This equation can be solved as usual.

Total acc. of S relative to R, $\mathbf{f}_{sr} = \mathbf{r_1\, s_1}$

Acceleration of $S = \mathbf{g_1\, s_1}$ or $\mathbf{a_1\, s_1}$ or $\mathbf{o_1\, s_1}$

The direction of $\mathbf{g_1s_1}$ is opposite to the direction of motion of the slider S indicating that the slider is decelerating.

***Example* 3.9** *Figure 3.16(a) shows a slider moving outwards on a rod with a velocity of 4 m/s when its distance from the point O is 1.5 m. At this instant, the velocity of the slider is increasing at a rate of 10 m/s². The rod has an angular velocity of 6 rad/s counter-clockwise about O and an angular acceleration of 20 rad/s² clockwise. Determine the absolute acceleration of the slider.*

Solution

Writing the acceleration vector equation,

$$\mathbf{f}_{po} = \mathbf{f}_{pq} + \mathbf{f}_{qo} = \mathbf{f}_{qo} + \mathbf{f}_{pq} = \mathbf{f}^{c}_{qo} + \mathbf{f}^{t}_{qo} + \mathbf{f}^{s}_{pq} + \mathbf{f}^{cr}_{pq}$$

or $\quad \mathbf{o_1\, p_1 = o_1q_o + q_oq_1 + q_1p_q + p_q\, p_1}$

Set the following vector table (Table 12):

Figure 3.16(b) shows how to obtain the direction of the coriolis component. The velocity vector of the slider is rotated through 90° in the angular direction of the rod.

Draw the acceleration diagram as follows [Fig. 3.16(c)]:

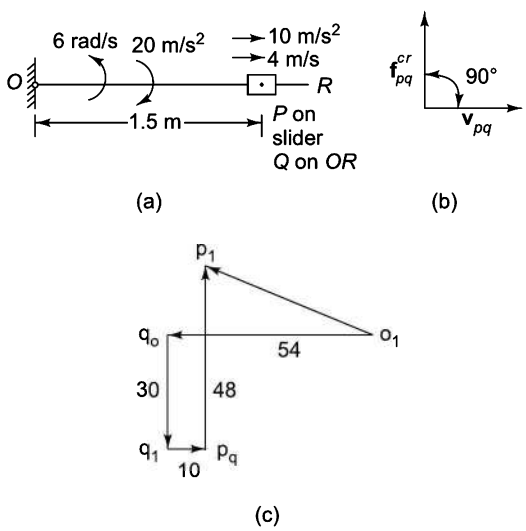

Fig. 3.16

1. From the pole point $\mathbf{o}_1$, take the first vector $\mathbf{o_1q_o}$.
2. Add to it the second vector $\mathbf{q_oq_1}$.

Table 12

SN	Vector	Magnitude (m/s²)	Direction	Sense
1.	$\mathbf{f}^{c}_{qo}$ or $\mathbf{o_1\, q_o}$	$\omega^2.r = 6^2 \times 1.5 = 54$	$\parallel OR$	←
2.	$\mathbf{f}^{t}_{qo}$ or $\mathbf{q_o\, q_1}$	$\alpha_{or} \times OQ = 20 \times 1.5 = 30$	$\perp OR$	↓
3.	$\mathbf{f}^{s}_{pq}$ or $\mathbf{q_1\, p_q}$	10	$\parallel OR$	→
4.	$\mathbf{f}^{cr}_{pq}$ or $\mathbf{p_q\, p_1}$	$2\omega.\, v_{pq} = 2 \times 6 \times 4 = 48$	$\perp OR$	

3. Add the third vector to the second vector.
4. To add the fourth vector, place the tail of the fourth vector at the head of the third vector and the final point $\mathbf{p_1}$ is located.
5. Join $\mathbf{o_1\ p_1}$.
   On measurement, $\mathbf{o_1\ p_1} = 47.5$ m/s^2
   or by calculation from the acceleration diagram
   $$= \sqrt{(54-10)^2 + (48-30)^2} = 47.5 \text{ m/s}^2$$

Example 3.10 *Fig. 3.17(a) shows the link mechanism of a quick-return mechanism of the slotted-lever type, the various dimensions of which are*

OA = 400 mm, OP = 200 mm, AR = 700 mm, RS = 300 mm.

For the configuration shown, determine the acceleration of the cutting tool at S and the angular acceleration of the link RS. The crank OP rotates at 210 rpm.

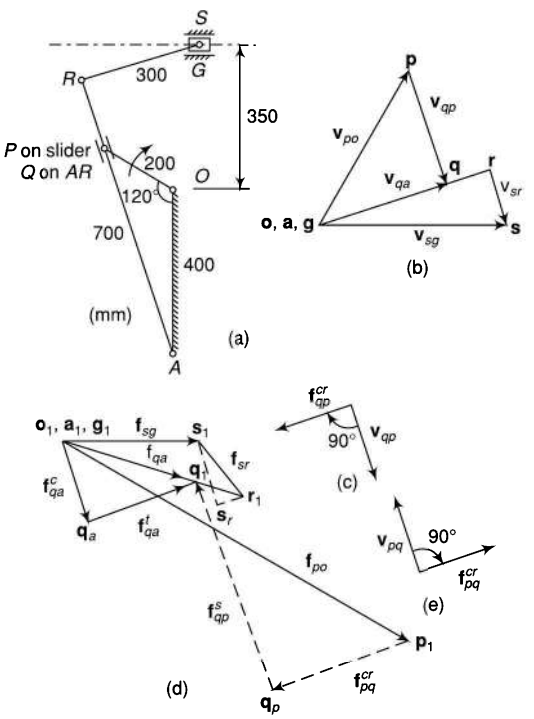

Fig. 3.17

Solution The velocity diagram has been reproduced in Fig. 3.17(b) from Fig. 2.21.

$$\mathbf{v}_{po} \text{ or } \mathbf{op} = \omega . OP = \frac{2\pi \times 210}{60} \times 0.2 = 22 \times 0.2 = 4.4 \text{ m/s}$$

Writing the acceleration vector equation,

$$\mathbf{f}_{qo} = \mathbf{f}_{qp} + \mathbf{f}_{po}$$
$$\mathbf{f}_{qa} = \mathbf{f}_{po} + \mathbf{f}_{qp}$$

or $\mathbf{a_1\ q_1 = o_1\ p_1 + p_1\ q_1}$

or $\mathbf{f^c_{qa} + f^t_{qa} = f^c_{po} + f^{cr}_{qp} + f^s_{qp}}$

or $\mathbf{a_1\ q_a + q_a\ q_1 = o_1\ p_1 + p_1\ q_p + q_p\ q_1}$

Set the following vector table (Table 13) shown in the following page.

Direction of f^{cr}_{qp} is obtained by rotating $\mathbf{v}_{qp}$ through 90° in the direction of angular movement of link *QA* as shown in Fig. 3.17(c) (clockwise in this case). Draw the acceleration diagram as follows [Fig. 3.17(d)]:

1. From the pole point $\mathbf{o}_1$, take the first vector $\mathbf{o_1\ p_1}$.
2. Add to it the second vector $\mathbf{p_1 q_p}$.
3. Add the third vector to the second vector. For the fourth vector, draw a line parallel to *AQ*, through the head $\mathbf{q_p}$ of the third vector.
4. From the pole point $\mathbf{a_1}$ or $\mathbf{o_1}$, take the fifth vector and for the sixth vector, draw a line perpendicular to *AQ* through the head $\mathbf{q_a}$ of the fifth vector.
   This way the point $\mathbf{q}_1$ is located.
5. Join $\mathbf{q_1}$ and $\mathbf{a_1}$ and extend to $\mathbf{r_1}$ such that
   $$\frac{\mathbf{a_1 r_1}}{\mathbf{a_1 q_1}} = \frac{AR}{AQ}$$
   Writing the vector equation,
   $$\mathbf{f}_{so} = \mathbf{f}_{sr} + \mathbf{f}_{ro}$$
   or $$\mathbf{f}_{sg} = \mathbf{f}_{ro} + \mathbf{f}_{sr}$$
   $$= \mathbf{f}_{ro} + \mathbf{f}^c_{sr} + \mathbf{f}^t_{sr}$$
   or $\mathbf{g_1\ s_1 = o_1\ r_1 + r_1\ s_r + s_r\ s_1}$

$\mathbf{f}_{ro}$ is already available on the acceleration diagram. $\mathbf{f}_{sg}$ is horizontal.

$$\mathbf{f^c_{sr}} = \frac{(\mathbf{rs})^2}{RS} = \frac{(1.41)^2}{0.3} = 6.63 \text{ m/s}^2$$

Complete the vector diagram as usual.

Acceleration of the cutting tool, $\mathbf{f_s} = \mathbf{o_1\ s_1}$ = <u>32.8 m/s^2</u>

$$\alpha_{rs} = \frac{\mathbf{f^t_{rs}} \text{ or } \mathbf{s_1 s_r}}{RS} = \frac{15.7}{0.3} = \underline{52.3 \text{ rad/s}} \text{ clockwise}$$

Table 13

SN	Vector	Magnitude (m/s^2)	Direction	Sense
1.	$\mathbf{f}^{c}_{po}$ or $\mathbf{o_1\,p_1}$	$\frac{(\mathbf{op})^2}{OP} = \frac{(4.4)^2}{0.2} = 96.8$	$\parallel OP$	$\rightarrow O$
2.	$\mathbf{f}^{cr}_{qp}$ or $\mathbf{p_1\,q_p}$	$2\,\omega_{ra}\,\mathbf{v_{qp}} = 35.5$*	$\perp AQ$	Refer *
3.	$\mathbf{f}^{s}_{qp}$ or $\mathbf{q_p\,q_1}$	–	$\parallel AQ$	–
4.	$\mathbf{f}^{c}_{qa}$ or $\mathbf{a_1\,q_a}$	$\frac{(\mathbf{aq})^2}{AQ} = \frac{(3.26)^2}{0.52} = 20.4$	$\parallel AQ$	$\rightarrow A$
5.	$\mathbf{f}^{t}_{qa}$ or $\mathbf{q_a\,q_1}$	–	$\perp AQ$	–

$$*\mathbf{f}^{cr}_{qp} = 2\omega_{ra}v_{qp} = 2\frac{v_{ra}}{RA}v_{qp} = 2\times\frac{4.36}{0.7}\times 2.85 = 35.5 \text{ m/s}^2$$

Note: In case the problem is to be worked out without writing the vector equation and if the Coriolis acceleration component $\mathbf{f}^{cr}_{pq}$ is considered instead of $\mathbf{f}^{cr}_{qp}$, then note that

- the magnitude of the Coriolis component remains the same.
- in order to find the direction, the velocity vector $\mathbf{v_{qp}}$ is to be rotated through 90° as shown in Fig. 3.17e. The direction of $\mathbf{f}^{cr}_{qp}$ is found to be opposite to $\mathbf{f}^{cr}_{pq}$. Now, one will be tempted to place this vector towards right of $\mathbf{p_1}$ in the acceleration diagram. However, if that is done, the vector would be read as $\mathbf{p_1q_p}$ which means $\mathbf{f}^{cr}_{qp}$ and not $\mathbf{f}^{cr}_{pq}$. Thus, again the vector $\mathbf{f}^{cr}_{qp}$ has to be placed at the same place, i.e., on the left of $\mathbf{p_1}$ which means the acceleration diagram obtained will be the same.

***Example* 3.11** *Figure 3.18(a) shows the Scotch yoke mechanism. At the instant shown in the figure, the crank OP has an angular velocity of 10 rad/s and an angular acceleration of 30 rad/s^2. Determine the acceleration of the slider P in the guide and the horizontal acceleration of the guide.*

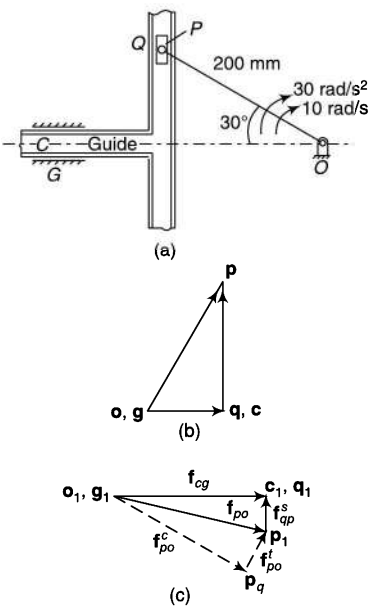

Fig. 3.18

Solution $v_{po} = 10 \times 0.2 = 2$ m/s

To draw the velocity diagram, take a coincident point Q just beneath P on the guide link. Take another point C on the guide link. Now, proceed as follows [Fig. 3.18(b)]:

1. Take the vector **op** equal to 2 m/s to some suitable scale.
2. The velocity of Q relative to P is along the guide path. Therefore, draw a line parallel to this path (vertical) through **p** to locate the point **q**.
3. The velocity of C relative to G is along the guide path at G or is horizontal. Thus, draw a horizontal line through **g** to locate point **c**.
4. Now, Q and C are two fixed points on the same link and the distance between them does not vary. Therefore, the points **q** and **c** in the velocity diagram coincide. Thus, the intersection of lines drawn in steps 2 and 3 locates points **q** or **c**.

   Now, $\mathbf{f_{po}^c}$ or $\mathbf{o_1\,p_o} = \dfrac{(\mathbf{op})^2}{OP} = \dfrac{2^2}{0.2} = 20\,\text{m/s}^2$

   $\mathbf{f_{po}^t}$ or $\mathbf{p_o\,p_1} = 30 \times 0.2 = 6\ \text{m/s}^2$

   Draw acceleration diagram as follows [Fig. 3.18(c)]:
1. First take the centripetal acceleration component $\mathbf{f_{po}^c}$ or $\mathbf{o_1p_o}$ and add the tangential component $\mathbf{f_{po}^t}$ or $\mathbf{p_op_1}$ to it.
2. Now, the linear acceleration of sliding of Q relative to P is vertical. Thus, draw a line to locate point $\mathbf{q_1}$ on that.
3. Draw a horizontal line through $\mathbf{g_1}$ to locate the point $\mathbf{c_1}$ on that.
4. As there is zero velocity between Q and P, they are to be the coinciding points in the acceleration diagram also. Thus, the intersection of lines drawn in steps 2 and 3 locates the point $\mathbf{q_1}$ or $\mathbf{c_1}$.

   Acceleration of slider P = $\mathbf{f_{pq}}$ or $\mathbf{q_1p_1}$ = 4.75 m/s^2

   and horizontal acceleration of guide = $\mathbf{f_{cg}}$ or $\mathbf{g_1\ c_1} = 20.5\ \text{m/s}^2$

It is to be noted that in this example, Q and P are two coincident points, but still there is no Coriolis component. This is because the link (guide) on which the slider is moving does not have any angular motion and thus ω for that is zero.

Example 3.12 *A Whitworth quick-return mechanism has been shown in Fig. 3.19(a). The dimensions of the links are OP (crank) = 240 mm, OA =150 mm, AR=165 mm and RS = 430 mm. The crank OP has an angular velocity of 2.5 rad/s and an angular deceleration of 20 rad/s² at the instant. Determine the*

(i) acceleration of the slider S

(ii) angular acceleration of links AR and RS

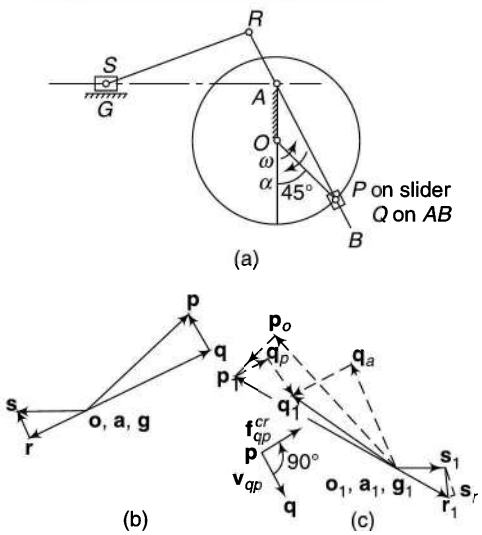

Fig. 3.19

Solution The velocity diagram has been reproduced in Figs 3.19(b) from Fig. 2.25(b).

Writing the acceleration vector equation,

$$\mathbf{f}_{qo} = \mathbf{f}_{qp} + \mathbf{f}_{po} \qquad \text{or} \qquad \mathbf{f}_{pa} = \mathbf{f}_{pq} + \mathbf{f}_{qa}$$

Both the equations lead to the same acceleration diagram except that the direction sense of the acceleration vectors between P and Q are reversed.

Taking the first one,

$$\mathbf{f}_{qo} = \mathbf{f}_{qp} + \mathbf{f}_{po}$$

$$\mathbf{f}_{qa} = \mathbf{f}_{po} + \mathbf{f}_{qp}$$

or $\quad \mathbf{a_1\,q_1 = o_1\,p_1 + p_1\,q_1}$

Each has two components,

$$\mathbf{f_{qa}^c + f_{qa}^t = f_{po}^c + f_{po}^t + f_{qp}^{cr} + f_{qp}^s}$$

or $\mathbf{a_1\, q_a + q_a\, q_1 = o_1\, p_o + p_o\, p_1 + p_1\, q_p + q_p\, q_1}$

Set the following vector table (Table 14):

The direction of f_{qp}^{cr} is obtained by rotating $\mathbf{v}_{qp}$ through 90° in the direction of angular movement of the link *QA* or *BA* (counter-clockwise in this case) Draw the acceleration diagram as follows [Fig. 3.19(c)]:

1. From the pole point $\mathbf{o_1}$, take the first vector and add to it the second vector.
2. Add the third vector to the second vector. For the fourth vector, draw a line parallel to *AQ*, through the head $\mathbf{q_p}$ of the third vector.
3. From the pole point $\mathbf{a_1}$ or $\mathbf{o_1}$, take the fifth vector and for the sixth vector, draw a line perpendicular to *AQ* through the head $\mathbf{q_a}$ of the fifth vector.
   This way the point $\mathbf{q_1}$ is located.
4. Join $\mathbf{q_1}$ and $\mathbf{a_1}$ and extend to $\mathbf{r_1}$ such that
   $$\frac{\mathbf{a_1\, r_1}}{\mathbf{a_1\, q_1}} = \frac{AR}{AQ}$$
   Writing the vector equation,
   $$\mathbf{f}_{so} = \mathbf{f}_{sr} + \mathbf{f}_{ro}$$
   or $$\mathbf{f}_{sg} = \mathbf{f}_{ro} + \mathbf{f}_{sr}$$
   $$= \mathbf{f}_{ro} + \mathbf{f}_{sr}^{c} + \mathbf{f}_{sr}^{t}$$
   or $$\mathbf{g_1\, s_1 = o_1\, r_1 + r_1\, s_r + s_r\, s_1}$$
   $\mathbf{f}_{ro}$ is already available on the acceleration diagram. $\mathbf{f}_{sg}$ is horizontal.

$$\mathbf{f}_{sr}^{c} = \frac{(\mathbf{rs})^2}{RS} = \frac{(0.12)^2}{0.43} = 0.033 \text{ m/s}^2$$

Complete the vector diagram as usual.

$$\mathbf{f_s = o_1\, s_1} = 0.39 \text{ m/s}^2$$

$$\alpha_{\alpha r} = \alpha_{qa} = \frac{\mathbf{f}_{qa}^{t} \text{ or } \mathbf{q}_a\, \mathbf{q}_1}{QA} = \frac{0.57}{0.365}$$

$= \underline{1.56 \text{ rad/s}^2}$ clockwise

$$\alpha_{rs} = \frac{\mathbf{f}_{rs}^{t} \text{ or } \mathbf{s}_1\, \mathbf{s}_r}{RS} = \frac{0.24}{0.43}$$

$= \underline{0.558 \text{ rad/s}^2}$ clockwise

Example 3.13 *One cylinder of a rotary engine is shown in the configuration diagram shown in Fig. 3.20(a). OA is the fixed crank, 200 mm long. OP is the connecting rod and is 520 mm long. The line of stroke is along AR and at the instant is inclined at 30° to the vertical. The body of the engine consisting of cylinders rotates at a uniform speed of 400 rpm about the fixed centre A. Determine the*

(i) acceleration of piston (slider) inside the cylinder

(ii) angular acceleration of the connecting rod

Table 14

SN	Vector	Magnitude (m/s²)	Direction	Sense
1.	$\mathbf{f}_{po}^{c}$ or $\mathbf{o_1\, p_o}$	$\frac{(\mathbf{op})^2}{OP} = \frac{(0.6)^2}{0.24} = 1.5$	$\parallel OP$	$\rightarrow O$
2.	$\mathbf{f}_{po}^{t}$ or $\mathbf{p_o\, p_1}$	$\alpha_{op} \times OP = 20 \times 0.24 = 0.48$	$\perp OP$ or $\parallel$ **op**	$\rightarrow$ **o**
3.	$\mathbf{f}_{qp}^{cr}$ or $\mathbf{p_1\, q_p}$	$2\, \omega_{ba}\, \mathbf{v}_{qp} = 0.38$*	$\perp AQ$	Refer *
4.	$\mathbf{f}_{qp}^{s}$ or $\mathbf{q_p\, q_1}$	-	$\parallel AQ$	-
5.	$\mathbf{f}_{qa}^{c}$ or $\mathbf{a_1\, q_a}$	$\frac{(\mathbf{aq})^2}{\mathbf{AQ}} = \frac{(0.585)^2}{0.365} = 0.93$	$\parallel AQ$	$\rightarrow A$
6.	$\mathbf{f}_{qa}^{t}$ or $\mathbf{q_a\, q_1}$	-	$\perp AQ$	-

$$*\mathbf{f}_{qp}^{cr} = 2\omega_{ba} v_{qp} = 2\frac{v_{qa}}{\mathbf{QA}} v_{qp} \qquad (\omega_{ba} = \omega_{qa}) = 2 \times \frac{0.585}{0.365} \times 0.118 \quad (v_{qa} = \mathbf{aq} = 0.585) = 0.38 \text{ m/s}^2$$

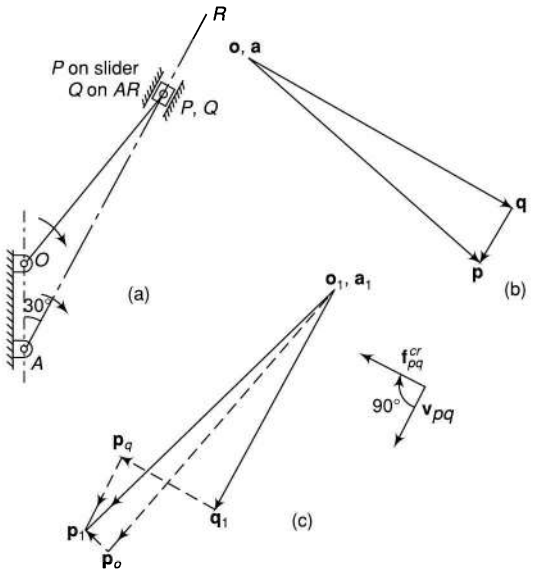

Fig. 3.20

Solution Let Q be a point on AR beneath the point P.

$$v_{qa} = \frac{2\pi N}{60} \times QA = \frac{2\pi \times 400}{60} \times 0.68 = 28.5 \text{ m/s}$$

The velocity vector equation is

$$\mathbf{v}_{pa} = \mathbf{v}_{pq} + \mathbf{v}_{qa} \quad \text{or} \quad \mathbf{v}_{qo} = \mathbf{v}_{qp} + \mathbf{v}_{po}$$

Taking the first one,

$$\mathbf{v}_{po} = \mathbf{v}_{qa} + \mathbf{v}_{qp}$$

or $\mathbf{op} = \mathbf{aq} + \mathbf{qp}$

Take the vector $\mathbf{v}_{qa}$ to a convenient scale [Fig. 3.20(b)].

$\mathbf{v}_{pq}$ is || to AR, draw a line || to AR through **q**.

$\mathbf{v}_{po}$ is ⊥ to OP, draw **op,** a line ⊥ to OP through **o**.

The intersection locates the point **p**.

Similarly, writing the acceleration vector equation,

$$\mathbf{f}_{pa} = \mathbf{f}_{pq} + \mathbf{f}_{qa}$$

or $\mathbf{f}_{po} = \mathbf{f}_{qa} + \mathbf{f}_{pq}$

or $\mathbf{o_1\, p_1} = \mathbf{a_1\, q_1} + \mathbf{q_1\, p_1}$

Expanding, $\mathbf{f}^c_{po} + \mathbf{f}^t_{po} = \mathbf{f}_{qa} + \mathbf{f}^{cr}_{pq} + \mathbf{f}^s_{pq}$

or $\mathbf{o_1\, p_o} + \mathbf{p_o\, p_1} = \mathbf{a_1\, q_1} + \mathbf{q_1\, p_q} + \mathbf{p_q} + \mathbf{p_1}$

Set the vector table (Table 15):

The direction of $\mathbf{f}^{cr}_{pq}$ is obtained by rotating $\mathbf{v}_{pq}$ through 90° in the direction of ω_{qa} (clockwise). Draw the vector diagram as follows:

1. Take the first vector from the pole point $\mathbf{a_1}$ or $\mathbf{o_1}$ [Fig. 3.20(c)].
2. Add the second vector to the first vector.
3. Through the head of the second vector, draw a line parallel to AQ for the third vector.
4. Take the fourth vector from the pole point $\mathbf{o_1}$.
5. Through the head of the fourth vector, draw a line perpendicular to OP for the fifth vector. The intersection of the lines drawn in steps (3) and (5) locates the point $\mathbf{p_1}$.

(i) Acceleration of the slider inside the cylinder $\mathbf{f}^s_{pq}$ or $\mathbf{p_q\ p_1}$ = <u>390 m/s²</u>

(ii) Angular acceleration of the connecting rod

$$\alpha_{op} = \frac{\mathbf{f}^t_{po} \text{ or } \mathbf{p_o p_1}}{OP} = \frac{150}{0.52} = \underline{288.5 \text{ rad/s}^2}$$

counter-clockwise

Table 15

SN	Vector	Magnitude (m/s²)	Direction	Sense
1.	$\mathbf{f_{qa}}$ or $\mathbf{a_1 q_1}$	$\frac{(\mathbf{aq})^2}{AQ} = \frac{(28.5)^2}{0.68} = 1194$	$\parallel AQ$	$\rightarrow A$
2.	$\mathbf{f}^{cr}_{pq}$ or $\mathbf{q_1\ p_q}$	486*	$\perp AQ$	-
3.	$\mathbf{f}^s_{pq}$ or $\mathbf{p_q\ p_1}$	-	$\parallel AQ$	-
4.	$\mathbf{f}^c_{po}$ or $\mathbf{o_1\ p_o}$	$\frac{(\mathbf{op})^2}{OP} = \frac{(29.3)^2}{0.52} = 1651$	$\parallel OP$	$\rightarrow \mathbf{o}$
5.	$\mathbf{f}^t_{po}$ or $\mathbf{p_o\ p_1}$	-	$\perp OP$	-

$$*\mathbf{f}^{cr}_{pq} = 2\omega_{ra} v_{pq} = 2\frac{v_{qa}}{QA}\mathbf{qp} = 2 \times \frac{28.5}{0.68} \times 5.8 = 486 \text{ m/s}^2$$

Example 3.14 *In the swiveling-joint mechanism shown in Fig. 3.21(a), AB is the driving crank rotating at 300 rpm clockwise. The lengths of the various links are*

AD = 650 mm, AB = 100 mm, BC = 800 mm, DC = 250 mm, BE = CE, EF = 400 mm, OF = 240 mm, FS = 400 mm

For the given configuration of the mechanism, determine the acceleration of sliding of the link EF in the trunnion.

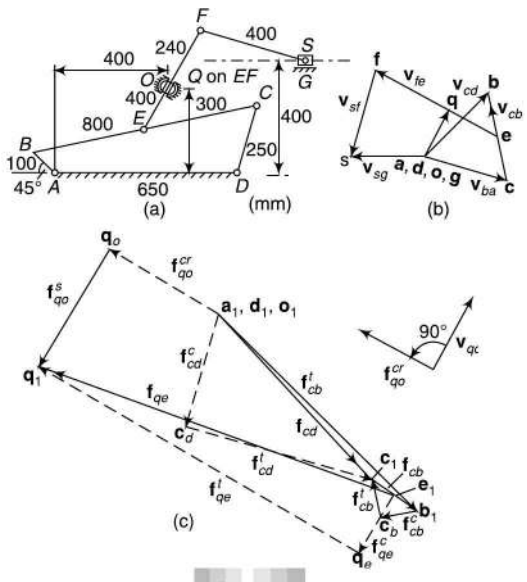

Fig. 3.21

Solution

$$\omega_{po} = \frac{2\pi \times 300}{60} = 31.4 \text{ rad/s}$$

$$v_b = 31.4 \times 0.1 = 3.14 \text{ m/s}$$

The velocity diagram is reproduced in Fig. 3.21(b) from Example 2.18. For the acceleration diagram, first complete the acceleration diagram for the four-link mechanism *ABCD* [Fig. 3.21(c)] as usual with the help of the following equation and table:

$$\mathbf{f_{ca}} = \mathbf{f_{cb}} + \mathbf{f_{ba}}$$

$$\mathbf{f_{cd}} = \mathbf{f_{ba}} + \mathbf{f_{cb}}$$

$$\mathbf{f^c_{cd}} + \mathbf{f^t_{cd}} = \mathbf{f^c_{ba}} + \mathbf{f^c_{cb}} + \mathbf{f^t_{cb}}$$

or $$\mathbf{d_1\, c_d} + \mathbf{c_d\, c_1} = \mathbf{a_1\, b_1} + \mathbf{b_1\, c_b} + \mathbf{c_b\, c_1}$$

Set the vector table (Table 16) as shown.

Now, locate the point $\mathbf{e_1}$, on the vector $\mathbf{b_1 c_1}$ at the mid point.

Acceleration of *Q* relative to *E* has two components:

(i) $\mathbf{f^c_{qe}} = \dfrac{v_{qe}}{QE} = \dfrac{(1.95)^2}{0.16} = 23.8 \text{ m/s}^2, \parallel QE$

(ii) $\mathbf{f^t_{qe}}$ is unknown in magnitude, and its direction is $\perp QE$.

From the point $\mathbf{e_1}$, take the vector for $\mathbf{f^c_{qe}}$ parallel to *QE* and draw a line $\perp$ to it for the vector $\mathbf{f^d_{qe}}$.

Now, the Coriolis component can be calculated,

$$* \mathbf{f}^{cr}_{qe} = 2\omega_{qe} v_{qo} = 2\frac{v_{qe}}{QE} v_{qo}$$

Table 16

SN	Vector	Magnitude (m/s²)	Direction	Sense
1.	$\mathbf{f^c_{ba}}$ or $\mathbf{a_1\, b_1}$	$\dfrac{(\mathbf{ab})^2}{AB} = \dfrac{(3.14)^2}{0.1} = 98.6$	$\parallel AB$	$\rightarrow A$
2.	$\mathbf{f^c_{cb}}$ or $\mathbf{b_1\, c_b}$	$\dfrac{(\mathbf{bc})^2}{BC} = \dfrac{(3.17)^2}{0.8} = 12.6$	$\parallel BC$	$\rightarrow B$
3.	$\mathbf{f^t_{cb}}$ or $\mathbf{c_b\, c_1}$	-	$\perp BC$	-
4.	$\mathbf{f^c_{cd}}$ or $\mathbf{d_1\, c_d}$	$\dfrac{(\mathbf{dc})^2}{DC} = \dfrac{(3.18)^2}{0.25} = 40.5$	$\parallel DC$	$\rightarrow D$
5.	$\mathbf{f^t_{cd}}$ or $\mathbf{c_d\, c_1}$	-	$\perp DC$	-

$$= 2 \times \frac{1.95}{0.16} \times 1.85 = 45.1 \text{ m/s}^2$$

ω_{qe} is found to be counter-clockwise.

The direction for Coriolis component is taken by rotating v_{qe} through 90° in the direction of angular movement of the link *QE* (counter-clockwise in this case). The acceleration diagram is completed as usual.

Acceleration of sliding of link *EF* in the trunnion $= \mathbf{q_o q_1} = \underline{4.86 \text{ m/s}^2}$

This shows that it is downwards or opposite to the velocity. Thus, it is deceleration.

***Example* 3.15** *In the pump mechanism shown in Fig. 3.22(a), OA = 320 mm, AC = 680 mm and OQ = 650 mm. For the given configuration, determine*

(i) linear (sliding) acceleration of slider C relative to cylinder walls

(ii) angular acceleration of the piston rod

Solution The velocity diagram has been reproduced in Fig. 3.22(b) from Example 2.15.

The problem can be solved by either of the two methods discussed for velocity diagram in Example 2.15.

Writing the acceleration vector equation for the latter configuration,

$$\mathbf{f}_{aq} = \mathbf{f}_{ab} + \mathbf{f}_{bq}$$

or $$\mathbf{f}_{ao} = \mathbf{f}_{bq} + \mathbf{f}_{ab}$$

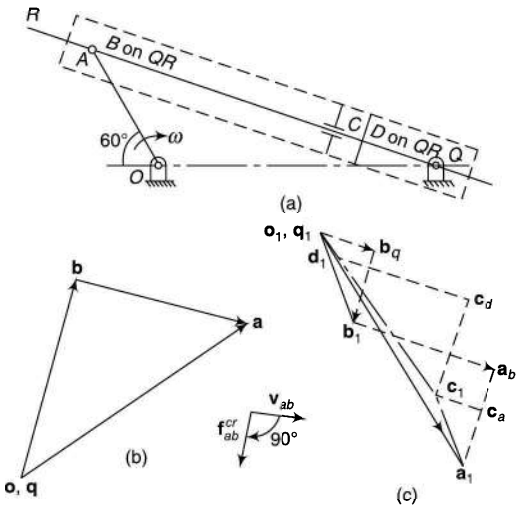

Fig. 3.22

$$= \mathbf{f}^c_{bq} + \mathbf{f}^t_{bq} + \mathbf{f}^s_{ab} + \mathbf{f}^{cr}_{ab}$$

or $$\mathbf{o_1\, a_1 = q_1\, b_q + b_q\, b_1 + b_1\, a_b + a_b\, a_1}$$

Set the vector table (Table 17)

The direction of $\mathbf{f}^{cr}_{ab}$ is obtained by rotating $\mathbf{v}_{ba}$ through 90° in the direction of ω_{bq} (clockwise).

Draw the acceleration diagram as given below:

1. Take the first vector [Fig. 3.22(c)].
2. From point $\mathbf{q_1}$ (pole point), take the second vector and through the head of it, draw a line perpendicular to *QB* for the third vector.

Table 17

SN	Vector	Magnitude (m/s²)	Direction	Sense
1.	$\mathbf{f_{ao}}$ or $\mathbf{o_1\, a_1}$	$\frac{(\mathbf{oa})^2}{OA} = \frac{(6.4)^2}{0.32} = 128$	‖ *OA*	→ *O*
2.	$\mathbf{f^c_{bq}}$ or $\mathbf{q_1\, b_q}$	$\frac{(\mathbf{bq})^2}{BQ} = \frac{(4.77)^2}{0.85} = 26.8$	‖ *QB*	→ *Q*
3.	$\mathbf{f^t_{bq}}$ or $\mathbf{b_q\, b_1}$	-	⊥ *QB*	-
4.	$\mathbf{f^s_{ab}}$ or $\mathbf{b_1\, f_b}$	-	‖ *QB*	-
5.	$\mathbf{f^{cr}_{ab}}$ or $\mathbf{a_b\, a_1}$	47.1*	⊥ *QB*	-

$$*\mathbf{f}^{cr}_{ab} = 2\omega_{rq} v_{ab} = 2\frac{v_{bq}}{BQ}\mathbf{ba} \quad (\omega_{rq} = \omega_{bq}) = 2 \times \frac{4.77}{0.85} \times 4.2 = 47.1 \text{ m/s}^2$$

3. Take the fifth vector from the point $\mathbf{a_1}$ such that the vector is in the proper direction and sense.
4. For the fourth vector, draw a line parallel to QB through the tail $\mathbf{a_b}$ of the fifth vector.

The intersection of the lines drawn in steps (2) and (4) locates point $\mathbf{b_1}$.

Let D be a point on QB beneath the point C.

Acc. of C rel. to cylinder walls

$= f^s_{cd} = f^s_{ab} = \underline{72 \text{ m/s}^2}$

Writing the vector equation,

$$\mathbf{f}_{cq} = \mathbf{f}_{cd} + \mathbf{f}_{dq}$$
$$= \mathbf{f}_{dq} + \mathbf{f}_{cd}$$
$$= \mathbf{f}_{dq} + \mathbf{f}^s_{cd} + \mathbf{f}^{cr}_{cd}$$

or $$\mathbf{q_1\, c_1 = q_1\, d_1 + d_1\, c_d + c_d\, d_1}$$

$$\mathbf{f}^s_{cd} = \mathbf{f}^s_{ab} = \underline{72 \text{ m/s}^2} \text{ parallel to } QB.$$
$$\mathbf{f}^{cr}_{cd} = 2\omega_{rq}\, v_{cd} = 2\omega_{rq} v_{ab} = f^{cr}_{ab}$$

Locate point $\mathbf{d_1}$ on $\mathbf{q_1\, b_1}$ such that $\dfrac{\mathbf{q_1 d_1}}{\mathbf{q_1 b_1}} = \dfrac{QD}{QB}$

To the vector $\mathbf{f}_{dq}$, add the vector $\mathbf{f}^s_{cd}$ and then $\mathbf{f^{cr}_{cd}}$.

Thus, the point $\mathbf{c}_1$ is located.

Join $\mathbf{a_1}$ to $\mathbf{c_1}$.

$\mathbf{a_1 c_1}$ represents total acceleration of C relative to A. This has two components.

$$\mathbf{f}^t_{cd} \perp \text{ to } CA = \mathbf{a_1\, c_a}$$

and $$\mathbf{f}^c_{ca} \parallel \text{ to } CA\ (= \mathbf{c_a\, c_1})$$

$$\alpha_{ca} = \frac{\mathbf{f}^t_{ca}}{CA} = \frac{14}{0.68} = \underline{20.59 \text{ rad/s}^2}$$

counter-clockwise

***Example* 3.16** *The dimensions of a four-link mechanism are as under [Fig. 3.23(a)]:*

AB = 35 mm, BC = 40 mm, CD = 45 mm and AD = 70 mm. At the instant when ∠DAB= 75°, the link AB rotates with an angular velocity of 10 rad/s in the counter-clockwise direction. Given the coincident points P attached to the link CD and Q attached to the link BC such that BQ = 30 mm and CQ = 20 mm. Determine the acceleration of P relative to Q (or the link BC).

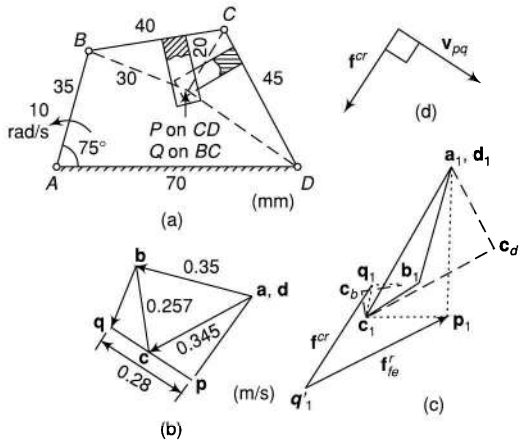

Fig. 3.23

Solution $v_b = 10 \times 0.035 = 0.35$ m/s

Complete the velocity diagram as shown in Fig. 3.23(b). Point Q can be located by drawing the velocity image of the triangle BCQ and P by drawing the velocity image of the triangle DCP.

For acceleration diagram, we have,

Acc. of C rel. to A = Acc. of C rel. to B + Acc. of B rel. to A

$$\mathbf{f}_{ca} = \mathbf{f}_{cb} + \mathbf{f}_{ba}$$

or $$\mathbf{f}_{cd} = \mathbf{f}_{ba} + \mathbf{f}_{cb}$$

or $$\mathbf{d_1\, c_1 = a_1\, b_1 + b_1\, c_1}$$

Writing in terms of components,

$$\therefore \quad \mathbf{f^c_{cd} + f^t_{cd} = f^c_{ba} + f^c_{cb} + f^t_{cb}}$$

or $$\mathbf{d_1\, c_d + c_d\, c_1 = a_1\, b_1 + b_1\, c_b + c_b\, c_1}$$

Set the following vector table (Table 18):

Draw the acceleration diagram $\mathbf{a_1 b_1 c_1 d_1}$ following the steps of Example 3.1. Locate the point $\mathbf{p}_1$ by drawing the acceleration image of the triangle DCP on the vector $\mathbf{c_1 d_1}$ and $\mathbf{q}_1$ by drawing the acceleration image of the triangle BCQ on the vector $\mathbf{b_1 c_1}$ [Fig.3.23(c)]

Now,

$\mathbf{f}_{pa}$ = Acc. of P rel. to Q + Acc. of Q rel. to A + Coriolis acceleration component

$$= \mathbf{f}_{pq} + \mathbf{f}_{qa} + \mathbf{f}^{cr}$$

In the above equation $\mathbf{f}_{pa}$ $(\mathbf{a_1 p_1})$ and $\mathbf{f}_{qa}$ $(\mathbf{a_1 q_1})$ are known and it is required to find $\mathbf{f}_{pq}$. Therefore, first we have to find $\mathbf{f}^{cr}$.

Table 18

SN	Vector	Magnitude (m/s²)	Direction	Sense
1.	$\mathbf{f}^c_{ba}$ or $\mathbf{a}_1\ \mathbf{b}_1$	$\frac{(\mathbf{ab})^2}{AB} = \frac{(0.35)^2}{0.035} = 3.5$	$\parallel AB$	$\rightarrow A$
2.	$\mathbf{f}^c_{cb}$ or $\mathbf{b}_1\ \mathbf{c}_b$	$\frac{(\mathbf{bc})^2}{BC} = \frac{(0.257)^2}{0.04} = 1.65$	$\parallel BC$	$\rightarrow B$
3.	$\mathbf{f}^t_{cb}$ or $\mathbf{c}_b\ \mathbf{c}_1$	-	$\perp BC$	-
4.	$\mathbf{f}^c_{cd}$ or $\mathbf{d}_1\ \mathbf{c}_d$	$\frac{(\mathbf{dc})^2}{DC} = \frac{(0.345)^2}{0.045} = 2.65$	$\parallel DC$	$\rightarrow D$
5.	$\mathbf{f}^t_{cd}$ or $\mathbf{c}_d\ \mathbf{c}_1$	-	$\perp DC$	-

$$*\mathbf{f}^{cr} = 2\omega_{bc}\ v_{pq}$$

$$= 2\frac{v_{bc}}{BC}\mathbf{qp}$$

$$= 2\times\frac{0.257}{0.04}\times 0.28 = 3.6 \text{ m/s}^2$$

Its direction is given by as shown in Fig. 3.23(d) by rotating the vector $\mathbf{v}_{pq}$ in the direction of angular velocity of BC which is clockwise in this case.

f_{pq} is represented by vector $\mathbf{q_1\ p_1}$ = 4.38 m/s²

This is the acceleration of P relative to Q (or the link BC), i.e, the acceleration which an observer stationed on link BC would report as the acceleration of the point P.

3.7 ALGEBRAIC METHODS

Let us consider the same system of a plane moving body having its motion relative to a fixed coordinate system xyz as was taken in Section 2.11. A moving coordinate system $x'y'z'$ is attached to this moving body as before (Fig. 3.24). Coordinates of the origin A of the moving system are known relative to the absolute reference system and the moving system has an angular velocity ω also.

To find the acceleration of P, a procedure similar to the one adopted for velocity is used here also.

Vector Approach

Equation 2.7 is

$$\mathbf{v}_p = \mathbf{v}_b + \mathbf{v}^R + \omega \times \mathbf{r}$$

Differentiating it to obtain the acceleration of P,

$$\dot{\mathbf{v}}_\mathbf{p} = \dot{\mathbf{v}}_\mathbf{b} + \dot{\mathbf{v}}^\mathbf{R} + \dot{\omega}\times\mathbf{r} + \omega\times\dot{\mathbf{r}}$$

where $\dot{\omega}$ is the angular acceleration of rotation of the moving system.

and $\dot{\mathbf{v}}^\mathbf{R}$ is obtained by differentiating $(\dot{\mathbf{x}}'\mathbf{l} + \dot{\mathbf{y}}'\mathbf{m} + \dot{\mathbf{z}}'\mathbf{n})$, i.e.,

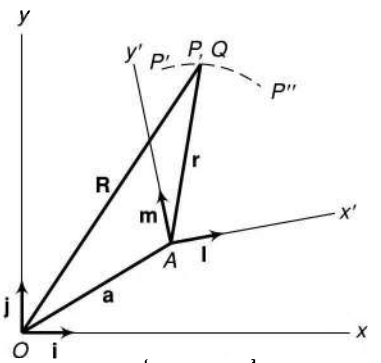

Fig. 3.24

$$\dot{v}^R = (\ddot{x}'l + \ddot{y}'m + \ddot{z}'n) + (\dot{x}'\dot{l} + \dot{y}'\dot{m} + \dot{z}'\dot{n})$$
$$= (\ddot{x}'l + \ddot{y}'m + \ddot{z}'n) + \omega\,(\dot{x}'l + \dot{y}'m + \dot{z}'n)$$
$$= f^R + \omega X v^R$$

$$\omega \times \dot{r} = \omega \times \frac{d}{dt}\,(x'l + y'm + z'n)$$
$$= \omega \times (\dot{x}'l + \dot{y}'m + \dot{z}'n) + \dot{E}\,(x'\dot{l} + y'\dot{m} + z'\dot{n})$$
$$= \omega \times v^R + \omega \times (\omega \times r)$$

But $\dot{\mathbf{v}}_\mathbf{p} = \mathbf{f}_\mathbf{p}$ and $\dot{\mathbf{v}}_\mathbf{b} = \mathbf{f}_\mathbf{b}$

Therefore,

$$\mathbf{f}_\mathbf{p} = \mathbf{f}_\mathbf{b} + (\mathbf{f}^\mathbf{R} + \omega \times \mathbf{v}^\mathbf{R}) + \dot{\omega} \times \mathbf{r} + [\omega \times \mathbf{v}^\mathbf{R} + \omega \times (\omega \times \mathbf{r})]$$
$$= \mathbf{f}_\mathbf{b} + \mathbf{f}^\mathbf{R} + 2\omega \times \mathbf{v}^\mathbf{R} + \dot{\omega} \times \mathbf{r} + \omega \times (\omega \times \mathbf{r}) \qquad \text{(i)}$$

Now absolute acceleration of Q, the coincident point may be written as

$$\mathbf{f}_{qa} = \mathbf{f}_{qb} + \mathbf{f}_{ba}$$
$$= \mathbf{f}_{ba} + f_{qb}$$
$$= \mathbf{f}_\mathbf{b} + \frac{\mathbf{d}}{\mathbf{dt}}(\omega \times \mathbf{r})$$
$$= \mathbf{f}_\mathbf{b} + \dot{\omega} \times \mathbf{r} + \omega \times (\omega \times \mathbf{r})$$

Thus equation (i) reduces to

$$\mathbf{f}_\mathbf{p} = \mathbf{f}_\mathbf{qa} + \mathbf{f}^\mathbf{R} + 2\omega X \mathbf{v}^\mathbf{R}$$
$$= \mathbf{f}_\mathbf{qa} + \mathbf{f}^\mathbf{R} + \mathbf{f}^\mathbf{C}$$

where $\mathbf{f}_{qa}$ is the absolute acceleration of Q, $\mathbf{f}^\mathbf{R}$ is the acceleration of P relative to the moving system or relative to Q, and $\mathbf{f}^\mathbf{C}$ is known as the Coriolis component of acceleration.

The above equation may be written as

$$\mathbf{f}_{pa} = \mathbf{f}_{qa} + \mathbf{f}_{pq} + \mathbf{f}^c$$
$$\mathbf{f}_{pa} = \mathbf{f}_{pq} + \mathbf{f}_{qa} + \mathbf{f}^c \qquad (3.6)$$

Acc. of P rel. to A = Acc. of P rel. to Q + Acc. of Q rel. to A + Coriolis Acc.

Use of Complex Numbers

Equation 2.8 is

$$\mathbf{v} = \dot{r}e^{i\theta} + ir\dot{\theta}\,e^{i\theta}$$

Differentiating it with respect to time,

$$\mathbf{f} = (\ddot{r}e^{i\theta} + \dot{r}i\,\dot{\theta}e^{i\theta}) + (ir\ddot{\theta}\,e^{i\theta} + i\dot{r}\dot{\theta}\,e^{i\theta} + i^2 r\dot{\theta}\,e^{i\theta})$$
$$= (\ddot{r}e^{i\theta} - r\dot{\theta}^2)e^{i\theta} + i(r\ddot{\theta} + 2\dot{r}\dot{\theta})e^{i\theta} \qquad (3.7)$$

The first part of this equation indicates the radial or *centripetal acceleration* and the second part, the *transverse acceleration* in polar coordinates.

$$\mathbf{f} = (f - \omega^2 r) + (r\alpha + 2\omega v)$$
$$= f + (r\alpha - \omega^2 r) + 2\omega v \qquad (3.8)$$

= Acc. of P rel. to Q + Acc. of Q rel. to A + Coriolis acceleration component i.e., the same equation as before.

3.8 KLEIN'S CONSTRUCTION

In Klein's construction, the velocity and the acceleration diagrams are made on the configuration diagram itself. The line that represents the crank in the configuration diagram also represents the velocity and the acceleration of its moving end in the velocity and the acceleration diagrams respectively. For a slider-crank mechanism, the procedure to make the Klein's construction is described below.

Slider-Crank Mechanism

In Fig. 3.25, *OAB* represents the configuration of a slider-crank mechanism. Its velocity and acceleration diagrams are as shown in Figs. 3.4(b) and (c). Let r be the length of the crank *OA*.

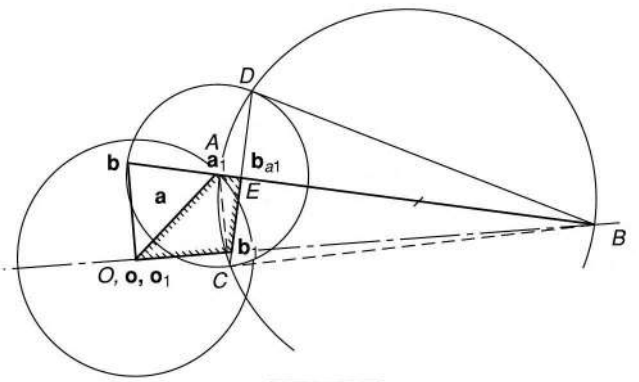

Fig. 3.25

Velocity Diagram For velocity diagram, let r represent v_{ao}, to some scale. Then for the velocity diagram, length $oa = \omega r = OA$.

From this, the scale for the velocity diagram is known.

Produce *BA* and draw a line perpendicular to *OB* through *O*. The intersection of the two lines locates the point **b**. the figure, **oab** is the velocity diagram which is similar to the velocity diagram of Fig. 3.4(b) rotated through 90° in a direction opposite to that of the crank.

Acceleration Diagram For acceleration diagram, let r represent f_{ao}.

$$\therefore \quad \mathbf{o_1\, a_1} = \omega^2 r = OA$$

This provides the scale for the acceleration diagram.

Make the following construction:

1. Draw a circle with **ab** as the radius and **a** as the centre.
2. Draw another circle with *AB* as diameter.
3. Join the points of intersections *C* and *D* of the two circles. Let it meet *OB* at $\mathbf{b_1}$ and *AB* at *E*.

Then $\mathbf{o_1 a_1 b_a b_1}$ is the required acceleration diagram which is similar to the acceleration diagram of Fig. 3.4(c) rotated through 180°.

The proof is as follows:

Join *AC* and *BC*.

AEC and *ABC* are two right-angled triangles in which the angle *CAB* is common. Therefore, the triangles are similar.

$$\frac{AE}{AC} = \frac{AC}{AB} \quad \text{or} \quad AE = \frac{(AC)^2}{AB} \quad \text{or} \quad \mathbf{a_1\, b_a} = \frac{(\mathbf{ab})^2}{AB} = f_{ba}^{c}$$

Thus, this acceleration diagram has all the sides parallel to that of acceleration diagram of Fig. 3.4(c) and also has two sides $\mathbf{o_1 a_1}$ and $\mathbf{a_1 b_a}$ representing the corresponding magnitudes of the acceleration. Thus, the two diagrams are similar.

3.9 VELOCITY AND ACCELERATION FROM DISPLACEMENT–TIME CURVE

Sometimes, displacement–time data for a moving point in a mechanism are available and it is required to find the velocity and acceleration at various instants. This can be done easily by graphical differentiation that uses the following rules:

1. Velocity is the derivative of displacement with respect to time and is proportional to the slope of the tangent to the displacement–time curve for any instant.
2. Acceleration is the derivative of velocity with respect to time and is proportional to the slope of the tangent to the velocity–time curve for any instant.

Figure 3.26(a) shows a displacement–time curve of a point in a mechanism. At the point C, LN is the tangent where the points L and N are chosen arbitrarily.

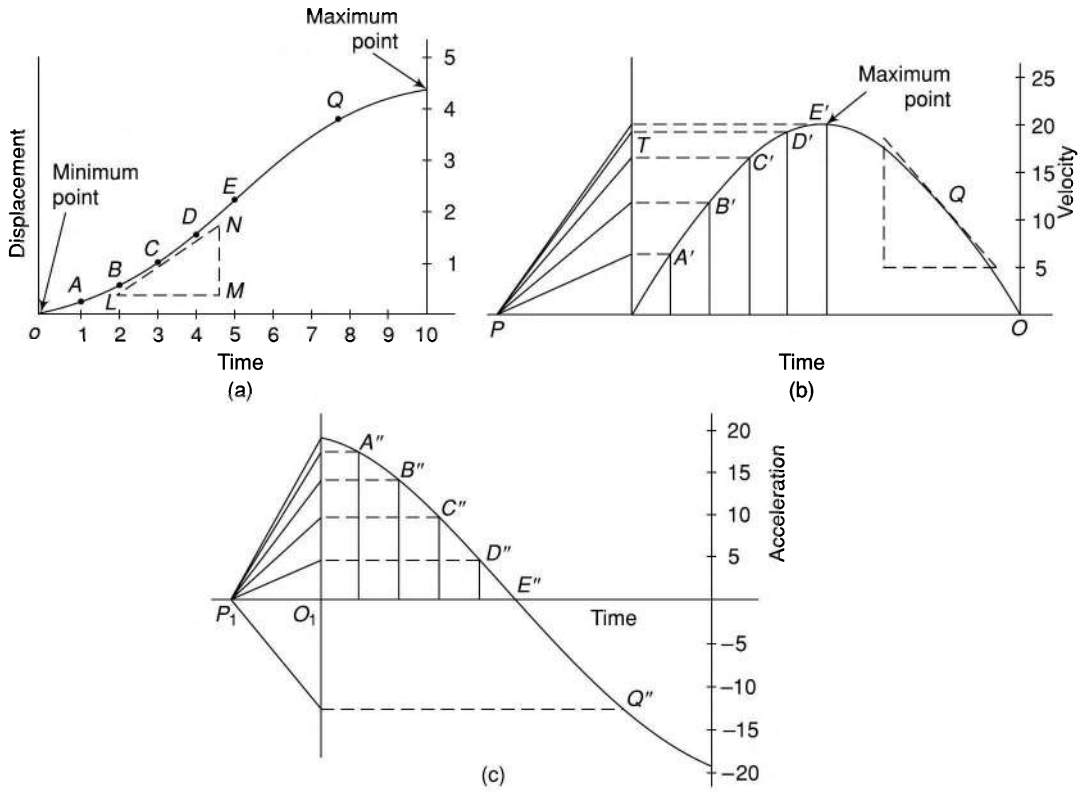

Fig. 3.26

Then
$$v_c = \frac{k_s\, NM}{k_t\, LM} \qquad \text{(i)}$$

where v_c = velocity at C and
k_s = displacement scale
k_t = time scale
and NM, LM = actual drawing distances

To plot the velocity–time curve, select a convenient point P (known as pole point) as shown in

Fig. 3.26 (b). Draw a line PT parallel to LN. Then it can be said that TO is the magnitude of the velocity at the point C to some scale which can be found as follows.

Let k_v = velocity scale

Then

$$v_c = k_v\, TO \tag{ii}$$

From (i) and (ii),

$$k_v\, TO = \frac{k_s\, NM}{k_t\, LM}$$

or

$$= \frac{k_s\, TO}{k_t\, PO}$$

$$k_v = \frac{k_s}{k_t} \cdot \frac{1}{PO}$$

Thus, the scale of k_v is known.

- *Alternatively, the velocity scale may be chosen first, and accordingly the point T may be marked for the velocity v_c and then drawing a line parallel to LN will locate the pole point P.*

Select more points on the displacement–time curve and draw tangents to the curve. From the pole point P, draw lines parallel to these tangents meeting the Y-axis. Project the points obtained on this axis to the corresponding ordinates. Complete the velocity–time curve using a *french* curve.

In the same way, the acceleration–time curve can be drawn by taking another pole point P_1 for that [Fig. 3.26 (c)]. The acceleration scale k_f will be given by

$$k_f = \frac{k_v}{k_t} \cdot \frac{1}{P_1O_1}$$

Note that the derivative is

1. positive if a curve rises and is negative if it falls
2. zero at a maximum or minimum point on a curve
3. numerically maximum (positive or negative) at an inflection point (a point where the curvature changes on the curve)

3.10 CENTRE OF CURVATURE

In using the acceleration vector equations, it is necessary to carefully identify a point whose centre of curvature is known so that the radius of curvature of its locus is known which is needed to calculate the normal component of acceleration. It will be interesting and convenient if any arbitrary point is used in finding this component if its radius of curvature could be calculated. In the following sections, some methods are presented to find the same.

In a planar motion, when a rigid body moves relative to another, an arbitrary chosen point on the first body traces a path relative to a coordinate system fixed to the second body. For example, if two bodies p and q are in relative motion then a point A on the body p traces a path relative to the coordinate system fixed to the body q. At any instant, the point A may be assumed to move in a curve and thus has a centre of curvature A' in the body q. Considering the inversion of this motion, the point A' in the body q also moves in a curve relative to the body p with its centre of curvature at A. Thus, each point acts as the centre of curvature of the locus

of the other. In the four-bar linkage of Fig. 3.2(a), A on the fixed link 1 is the centre of curvature of B on the moving coupler 3. Then considering the inversion, i.e., assuming link 3 to be fixed and releasing the fixed link 1, B on the link 3 is also the centre of curvature of the point A on the link 1. The two points are known as the *conjugates* of each other. The distance between them is called the radius of curvature of either locus.

3.11 HARTMANN CONSTRUCTION

The Hartmann construction is a graphical method to find the location of the centre of curvature of the locus of a point on a moving body. Let there be two bodies having a relative planar motion between them. Consider two curvatures of the two actual centrodes (Section 2.16) in the region near the point of contact at the instant. Let a circle with centre O' represent the circle corresponding to the curvature of fixed centrode and O, the centre of circle corresponding to the curvature of the moving centrode (Fig. 3.27). For the sake of convenience, the two circles may be called the fixed and the moving centrodes. Let I be the point of contact of the two centrodes which is also the instantaneous centre. The centrode tangent and the centrode normal are also shown in the figure.

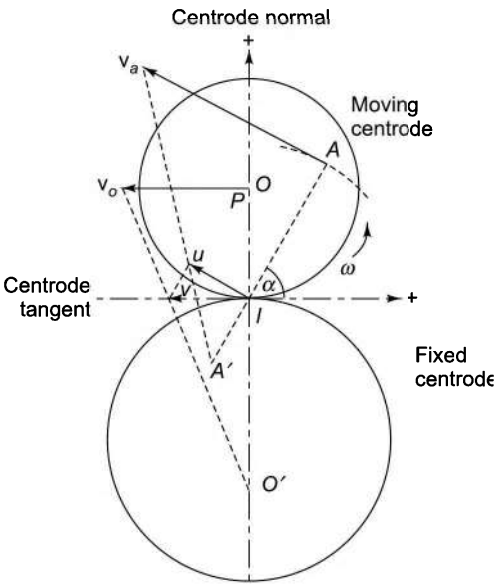

Fig. 3.27

Let the moving centrode roll on the fixed centrode with angular velocity ω. Then as I is also the instantaneous centre, the velocity of the point O is

$$v_o = \omega.OI$$

As the motion of moving centrode advances, the point of contact P moves along with some velocity v. Since at any instant, the line joining O with O' must pass through P, the velocity of P must be given by

$$v = \frac{IO'}{OO'} v_o$$

The velocity of any arbitrary point A on the moving centrode, i.e., a point on the coupler whose conjugate point is to be found is given by, $v_a = \omega.AI$.

To find the conjugate point of the point A, the Hartmann construction is as follows:

1. Take a vector representing the velocity $\mathbf{v_o}$ of the point O by drawing a line perpendicular to OI to a suitable scale. Also, take a vector representing $\mathbf{v_a}$, the velocity of A by taking a line perpendicular to AI and drawn to the same scale.
2. Draw the velocity vector $\mathbf{v}$ to indicate the velocity of the point I by drawing a line parallel to $\mathbf{v_o}$ and intersecting with the line joining O' with the end point of the vector $\mathbf{v_o}$.
3. Take a component of $\mathbf{v}$ parallel to $\mathbf{v_a}$. Let this vector be called $\mathbf{u}$.
4. Join end points of the vectors $\mathbf{v_a}$ and $\mathbf{u}$. Then the intersection of this line with AI provides the requisite conjugate point A', giving the radius of curvature of the locus of A as AA'.

3.12 EULER–SAVARY EQUATION

An analytical expression known as the *Euler–Savary equation* for the location of the conjugate point of A is derived as follows:

If α is the angle between the centrode tangent and the line AP (Fig. 3.27), then as $v = \frac{IO'}{OO'} v_o$,

$$u = v \sin\alpha = \frac{IO'}{OO'} v_o . \sin\alpha = \frac{IO'}{OO'} .(\omega.OP) \sin\alpha = \frac{IO'.OI}{OO'} .\omega.\sin\alpha \quad \text{(i)}$$

Also,
$$u = \frac{IA'}{AA'} v_a = \frac{IA'}{AA'} .(\omega.AI) = \frac{IA'.AI}{AA'} .\omega \quad \text{(ii)}$$

From (i) and (ii), $\frac{IO'.OI}{OO'} .\omega.\sin\alpha = \frac{IA'.AI}{AA'} .\omega$

or
$$\frac{AA'}{AI.IA'} \sin\alpha = \frac{OO'}{OI.IO'}$$

or
$$\left(\frac{AI}{AI.IA'} + \frac{IA'}{AI.IA'}\right) \sin\alpha = \frac{OI}{OI.IO'} + \frac{IO'}{OI.IO'}$$

or
$$\left(\frac{1}{IA'} + \frac{1}{AI}\right) \sin\alpha = \frac{1}{IO'} + \frac{1}{OI}$$

or
$$\left(\frac{1}{AI} - \frac{1}{A'I}\right) \sin\alpha = \frac{1}{OI} - \frac{1}{O'I} \quad \text{(iii)}$$

This is known as one form of the Euler–Savary equation. This is useful to locate the conjugate point A' of the point A when the radii of curvature of the two centrodes are known.

For any other point B at an angle β with the centrode tangent whose conjugate point is B' (Fig. 3.28), the above equation may be written as

$$\left(\frac{1}{BI} - \frac{1}{B'I}\right) \sin\beta = \frac{1}{OI} - \frac{1}{O'I}$$

Let this point be a particular point in the moving centrode such that it satisfies the equation

$$\frac{\sin\beta}{BI} = \frac{1}{OI} - \frac{1}{O'I}$$

This means that the term $1/B'I$ is zero which indicates that the point B is such that its conjugate point lies at infinity on the line joining BI.

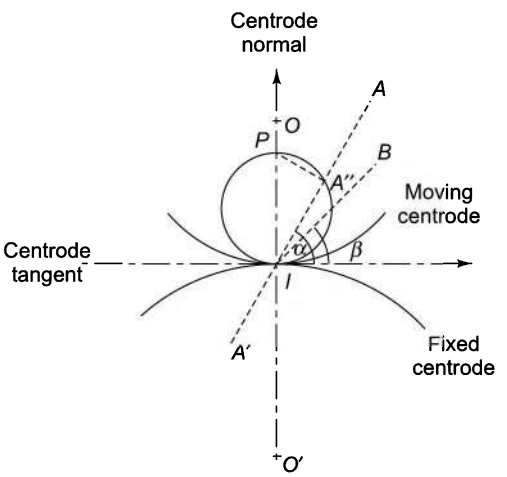

Fig. 3.28

Similarly, for a point P on the centrode normal whose conjugate point is at infinity on the line IO, $\frac{1}{PI} = \frac{1}{OI} - \frac{1}{O'I}$ as angle β is 90° and $\sin\beta$ is 1.

This also indicates that $PI = BI/\sin\beta$. The point P is known as the *inflection pole*.

Thus, to find more points whose conjugate points are at infinity, the equation $PI = BI/\sin\beta$ or $BI = PI/\sin\beta$ must be satisfied. This equation defines a circle whose diameter is IP as shown in Fig. 3.28. The circle is known as the *inflection circle*. Each point on this circle has an infinite radius of curvature at the instant and its conjugate point lies at infinity.

Thus, on the line AI, the point A'' intersecting the circle indicates that its conjugate point is at infinity and thus,

$$\frac{\sin\alpha}{A''I} = \frac{1}{OI} - \frac{1}{O'I} \tag{iv}$$

From (iii) and (iv), $\dfrac{1}{A''I} = \dfrac{1}{AI} - \dfrac{1}{A'I}$ or $\dfrac{1}{A''I} = \dfrac{A'I - AI}{AI.A'I}$ or $\dfrac{1}{A''I} = \dfrac{A'I + IA}{AI.A'I}$

or $\quad AI.A'I = A''I.A'A$

$\quad AI(A'A - IA) = (AI - AA'')A'A$

or $\quad AI.A'A - AI.IA = AI.A'A - AA''.A'A$

or $\quad AI.AI = AA''.AA'$

or $\quad AI^2 = AA''.AA'$ (3.9)

This is the second form of the Euler–Savary equation and is more useful than the first form as this does not require knowing the curvatures of the two centrodes. However, it requires drawing the inflection circle which can easily be drawn.

In applying the above equation, AA' and AA'' are to lie on the same side of A.

Example 3.17 *A slider-crank mechanism is shown in Fig. 3.29(a). The dimensions are:*
$OA = 20$ mm, $AB = 25$ mm, $AD = 10$ mm and $DC = 10$ mm.
Draw the inflection circle for the motion of the coupler and find the instantaneous radius of curvature of the path of the coupler point C.

Solution Locate the instantaneous centre of I at the intersection of OA and a line perpendicular to the direction of motion of the slider [Fig. 3.29(b)]. Apart from I, the point B also lies on the inflection circle as its centre of curvature is at infinity. One more point is needed to draw the inflection circle which can be obtained as follows:

As O is the centre of curvature of the point A, extend AO to A'' such that $AA'' = \dfrac{AI^2}{AO} = \dfrac{26.7^2}{20} = 35.6$ mm (on measurement $AI = 26.7$ mm) (Eq. 3.9)

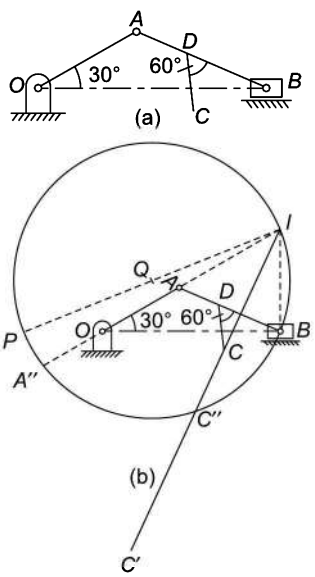

Fig. 3.29

Locate A'' as shown in the figure on the same side of A as A'. Thus, A'' is a point whose centre of curvature is at infinity.

Now draw a circle passing through points I, B and A'' by taking right bisectors of IB and BA'' (not shown in the figure) intersecting at the centre Q of the circle.

Diameter of the inflection circle, $IP = 62.5$ mm

To find the centre of curvature of the point C on the coupler, join IC intersecting the inflection circle at C''. Then C'' is a point having centre of curvature at infinity as this point lies on the inflection circle. Locate a point on IC or its extension such that

$$CC' = \frac{CI^2}{CC''} = \frac{29.9^2}{15.9} = 52.9 \text{ mm}$$

Locate C' as shown in the figure on the same side of C as C''. Then C' is the requisite centre of curvature of the point C.

3.13 BOBILLIER CONSTRUCTION

This is another graphical method by which inflection circle can be drawn without requiring the curvatures of the centrodes.

Let A and B be two points on the moving body which are not collinear with I (Fig. 3.30). Let A' and B' be their conjugate points respectively at the instant. Join AB and $A'B'$ and let their intersection be at Q. Then the line passing through I and Q is known as the *collineation axis*. This axis is specific for the two rays AA' and BB' and for another set of points A and B. Even on these rays, Q will have a different location and thus a different collineation axis.

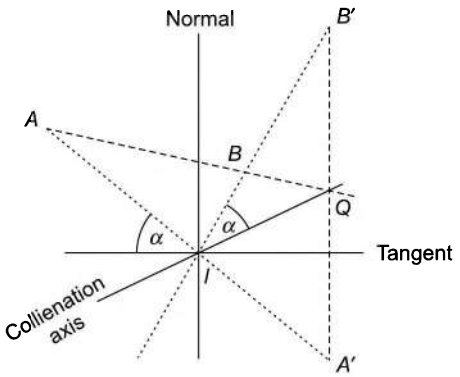

Fig. 3.30

Bobillier theorem It states that *the angle subtended by one of the rays (AA' or BB') with the centrode tangent is equal to negative of the angle subtended by the other ray with the collineation axis.*

In Fig. 3.30, the ray AA' subtends angle α with the centrode tangent and the ray BB' subtends the same negative angle with the collineation axis.

Proof

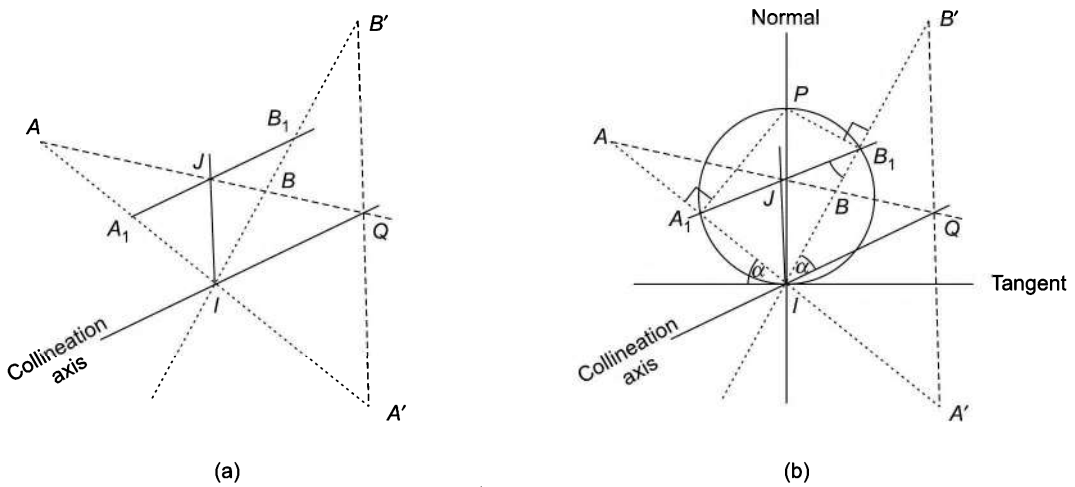

Fig. 3.31

Let A and A', and B and B' be the known pairs of conjugate points [Fig. 3.31(a)].

Make the following construction:

1. Locate the point I, the instantaneous centre of velocity at the intersection of two rays AA' and BB'.
2. Locate the point Q at the intersection of rays AB and $A'B'$.
3. Join IQ to obtain the collineation axis.
4. Draw a line parallel to $A'B'$ intersecting AB at J.
5. Draw a line parallel to IQ through J intersecting AA' and BB' at A_1 and B_1 respectively.
6. Draw a circle passing through I, A_1 and B_1 (Fig. 3.31b). A convenient way of drawing the circle is by drawing $A_1P \perp AA'$ and $B_1P \perp BB'$ intersecting two perpendicular lines at P. Now IP is the diameter of the inflection circle as it subtends a 90° angle at points A_1 and B_1 indicating that A_1 and B_1 are the points in the semicircles with diameter IP. Thus, P is the inflection pole. Draw the circle with IP as the diameter.
7. As IP is also the centrode normal, draw the centrode tangent as shown in the figure.

Let α be the angle which IA_1 subtends with the centrode tangent. Now, arc IA_1 is inscribed by the chord IA_1 which is at an angle α with the centrode tangent and subtends the angle IB_1A_1 at the circumference of the inflection circle. Therefore, the angle IB_1A_1 is also equal to α. As A_1B_1 is parallel to PQ and is intersected by IB', the angle IB_1A_1 is also equal to the angle QIB_1 i.e., equal to α. Thus, the angle subtended by one of the rays with the centrode tangent is equal to the negative of the angle subtended by the other ray with the collineation axis. Thus the construction satisfies the Bobillier theorem.

Method to find a conjugate point of another arbitrary point

Let the inflection circle be drawn and the centrode tangent and normal bc known and it is required to find the conjugate point of C (Fig. 3.32). The point P is the inflection pole, i.e., its conjugate point P' lies at infinity and thus the ray PP' is perpendicular to the tangent to the centrode tangent. This suggestes that according to the Bobillier theorem, the other ray CC' will be perpendicular to the collineation axis. But as the point C' must lie on IC, the collineation axis can be drawn by drawing a line perpendicular to IC at I. Since Q is a point of intersection of two rays PC and $P'C'$, it can be located at the intersection of PC and the collineation axis. Now as Q also lies on $P'C'$, joining of $P'Q$ means a line parallel to IP, the intersection of this line with IC locates the point C'.

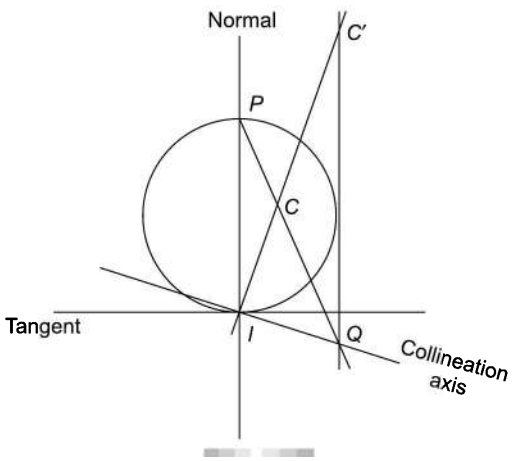

Fig. 3.32

Thus, the procedure to find the conjugate point C' of any arbitrary point C is as follows:

- Draw the collineation axis by drawing a line perpendicular to IC through I. Locate Q at the intersection of PC with the collineation axis.
- Draw a line parallel to IP through Q intersecting the line IC at C', the requisite conjugate point of C.

Example 3.18 *Use the Bobillier theorem to determine the centre of curvature of the coupler curve of the point E of the four-bar mechanism shown in Fig. 3.33(a). The dimensions are AD = AB = 60 mm, BC = CD = 25 mm. AD is the fixed link and E is the midpoint of BC.*

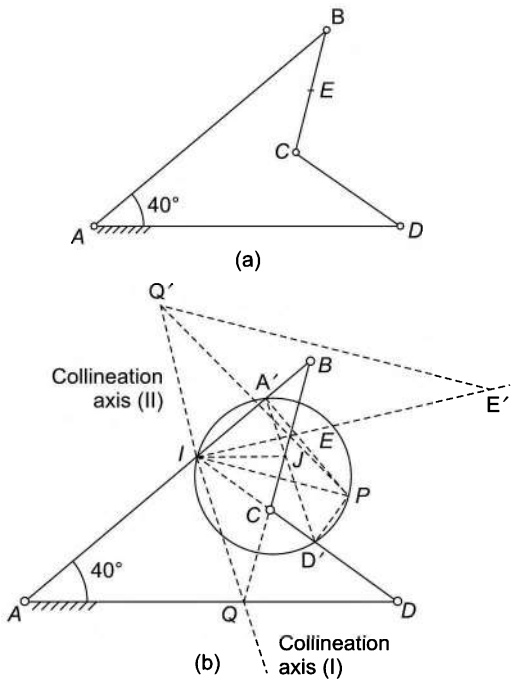

Fig. 3.33

Solution Proceed as follows:

1. Locate points I and Q. Join IQ which is the collineation axis [Fig. 3.33(b)].
2. Draw IJ parallel to AD intersecting BC at J. Draw $A'D'$ through J parallel to IQ and obtain points A' and D' on AB and DC respectively.
3. Through A' draw a perpendicular to AB and through D' draw a perpendicular to DC. Let these perpendiculars intersect at the inflection point P. Draw the inflection circle with IP as the diameter.
4. To find the conjugate point of E, draw the ray IE. Then obtain the new collineation axis by drawing a line perpendicular to IE through I. Locate Q' at the intersection of PE with the collineation axis.
5. Draw a line parallel to IP through Q' intersecting the line IE at E', the requisite conjugate point of E.
   On measurement, $EE' = 33$ mm

3.14 CUBIC OF STATIONARY CURVATURE

Usually, the coupler curve (the locus or path of a point on the coupler) is a sixth-order curve whose radius of curvature changes continuously. However, it is observed that in certain situations, the path has a stationary curvature. Thus, if R is the radius of curvature and s is the distance traveled along the path, then $dR/ds = 0$ indicates a stationary curvature of the curve. The locus of all such points on the coupler which have stationary curvature at the instant is known as the *cubic of the stationary curvature* or the *circling-point curve*. Note that the stationary curvature does not mean only a constant radius, but also that the continuously varying radius passes through a maximum or minimum value.

Graphical Method

Let the four-link mechanism be $ABCD$ as shown in Fig. 3.34(a) in which AD is the fixed link. Now, as the link AB can rotate about A only, therefore, A is also the conjugate of B with a constant radius of curvature AB. Thus, A lies on the cubic curve. Similarly, C also lies on the cubic as it has a constant radius of curvature CC'.

Now, adopt the following procedure:

1. Locate points I and Q as usual. Join IQ which is the collineation axis.
2. Let the angle subtended by the ray AB with the collineation axis be α. The same angle is subtended by the other ray CD with the centrode tangent at the point I in the opposite direction. Thus, make angle DIT equal to α with IA in the counter-clockwise direction as the angle made by AB with the collineation axis is clockwise. Then, IT is the centrode tangent.

3. Draw a line IN perpendicular to IT. Then IN is the centrode normal.
4. Draw a line perpendicular to IA at B intersecting IT and IN at B_t and B_n respectively. Through B_t and B_n, draw lines parallel to IN and IT respectively intersecting at B_1.
5. Repeat the step 4 by drawing a perpendicular to ID at C and obtain the point C_1. Draw a line joining B_1C_1 which is an auxiliary line used to obtain other points on the cubic. Let B_1C_1 intersect the centrode tangent at L and the centrode normal at M.
6. Choose any point G_1 on the line B_1C_1 [Fig. 3.34(b)] and draw lines parallel to the tangent and normal and intersecting these at G_t and G_n. Draw $IG \perp G_t\, G_n$. Then G is another point on the cubic of the stationary curve. Similarly, choose more points (such as H_1) on the line B_1C_1 and obtain more points lying on the curve. Draw a smooth curve passing through these points which is the required curve of the cubic of stationary curvature.

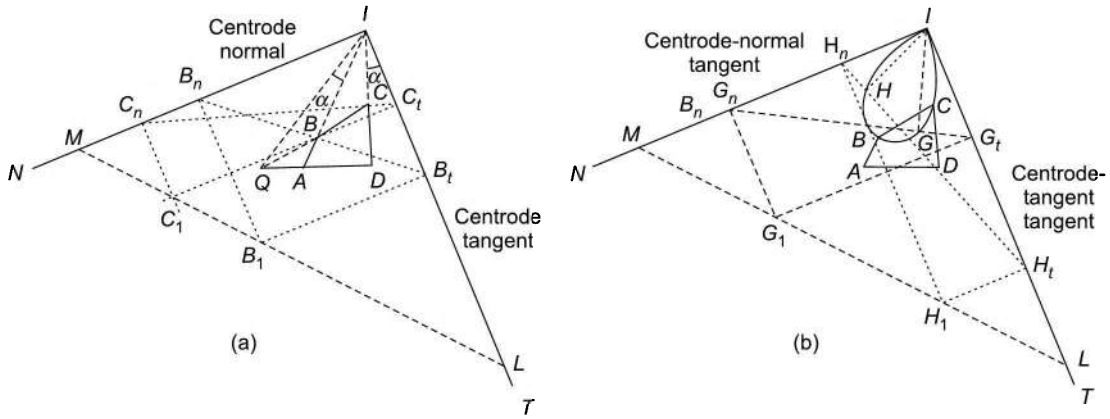

Fig. 3.34

Note that there are two tangents at I to the cubic of stationary curvature known as the centrode-normal tangent and the centrode-tangent tangent.

Radius of curvature of the cubic at the centrode-normal tangent = $IL/2$

Radius of curvature of the cubic at the centrode-tangent tangent = $IM/2$

The equation of the cubic of stationary curvature can be written as

$$\frac{1}{A_1 \sin\varphi} + \frac{1}{A_2 \sin\varphi} = \frac{1}{r} \tag{3.10}$$

where r is the distance of the point considered on the cubic from the instantaneous centre I at an angle ϕ subtended by a line joining the point and I with the centrode tangent. A_1 and A_2 are constants and can be found using any two known points lying on the cubic such as C and D.

Ball's Point A point at the intersection of the cubic with the inflection circle is known as Ball's point. It traces an approximately straight path as it has a stationary curvature of infinity.

Summary

1. Acceleration is the derivative of velocity with respect to time and is proportional to the slope of the tangent to the velocity–time curve for any instant.
2. The rate of change of velocity in the tangential direction of the motion of a particle is known as the *tangential acceleration.*

3. The rate of change of velocity along the radial direction is known as the *centripetal* or *radial acceleration*, the direction being towards the centre of rotation.
4. The angular acceleration of a link about one extremity is the same in magnitude and direction as the angular acceleration about the other and is found by dividing the tangential acceleration with the length of the link.
5. *Acceleration images* are helpful to find the accelerations of offset points of the links. The acceleration image of a link is obtained in the same manner as a velocity image.
6. Acceleration of a point on a link relative to a coincident point on a moving link is the sum of absolute acceleration of the coincident point, acceleration of the point relative to coincident point and the *Coriolis* acceleration.
7. The *Hartmann construction* is a graphical method to find the location of the centre of curvature of the locus of a point on the moving body.
8. The *Euler–Savary equation* is expressed as $AI^2 = AA''.\ AA'$
9. The Bobillier construction is another graphical method by which an inflection circle can be drawn without requiring the curvatures of the centrodes.
10. The *Bobillier theorem* states that *the angle subtended by one of the rays (AA′ or BB′) with the centrode tangent is equal to the negative of the angle subtended by the other ray with the collineation axis.*
11. The locus of all such points on the coupler which have stationary curvature at the instant is known as the *cubic of the stationary curvature* or the *circling-point curve*.

Exercises

1. What are centripetal and tangential components of acceleration? When do they occur? How are they determined?
2. Describe the procedure to draw velocity and acceleration diagrams of a four-link mechanism. In what way are the angular accelerations of the output link and the coupler found?
3. What is an acceleration image? How is it helpful in determining the accelerations of offset points on a link?
4. What is the Coriolis acceleration component? In which cases does it occur? How is it determined?
5. Explain the procedure to construct Klein's construction to determine the velocity and acceleration of a slider-crank mechanism.
6. Explain the term conjugates in relation to two points on two plain bodies.
7. Explain the Hartmann construction to find the location of the centre of curvature of the locus of a point on a moving body.
8. What is Euler–Savary equation? What are its two forms? Explain how these are used to find the location of conjugate points.
9. Use the Bobillier theorem to show that the inflection circle can be drawn without requiring the curvatures of the centrodes.
10. Define the term *cubic of the stationary curvature*. Explain one graphical method to draw it.
11. A crank and rocker mechanism *ABCD* has the following dimensions:
    AB = 0.75 m, *BC* = 1.25 m, *CD* = 1 m, *AD* = 1.5 m.
    BE = 437.5 mm, *CE* = 87.5 mm and *CF* = 500 mm
    E and *F* are two points on the coupler link *BC*. *AD* is the fixed link. *BEC* is read clockwise and *F* lies on *BC* produced. Crank *AB* has an angular velocity of 20.94 rad/s counter-clockwise and a deceleration of 280 rad/s² at the instant ∠*DAB* = 60°. Find the
    (i) instantaneous linear acceleration of *C*, *E* and *F*
    (ii) instantaneous angular velocities and accelerations of links *BC* and *CD*
    [(i) 166 m/s², 330 m/s², 161 m/s² (ii) ω_{bc} = 5.92 rad/s cw, ω_{cd} = 11.5 rad/s ccw, ω_{bc} = 229 rad/s² ccw, α_{cd} = 100 rad/s² ccw]

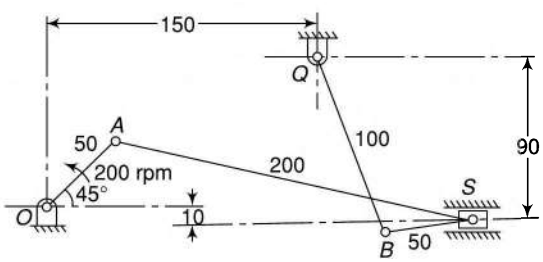

Fig. 3.35

12. Figure 3.35 shows a mechanism in which *O* and *Q* are the fixed centres. Determine the acceleration of the slider *S* and the angular acceleration of the link *BQ* for the given configuration.
    (14.5 m/s² towards left; 114 rad/s² cw)

13. In a simple steam engine, the lengths of the crank and the connecting rod are 100 mm and 400 mm respectively. The weight of the connecting rod is 50 kg and its centre of mass is 220 mm from the cross-head centre. The radius of gyration about the centre of mass is 120 mm. If the engine speed is 300 rpm, determine for the position when the crank has turned 45° from the inner-dead centre,
    (i) the velocity and acceleration of the centre of mass of the connecting rod
    (ii) the angular velocity and acceleration of the rod
    (iii) the kinetic energy of the rod
    [(i) 2.7 m/s, 80 m/s² (ii) 5.7 rad/s, 173 rad/s² (iii) 194 N.m]
14. From the data of a reciprocating pump given in Example 2.4, find the linear acceleration of the cross-head *E* and the angular accelerations of the links *BCD* and *DE*.
    [9.25 m/s²; 60.8 rad/s²; 5.12 rad/s²]
15. Figure 3.36 shows a toggle mechanism in which the crank OA rotates at 120 rpm. Find the velocity and the acceleration of the slider at D.
    (0.17 m/s; 0.83 m/s²)

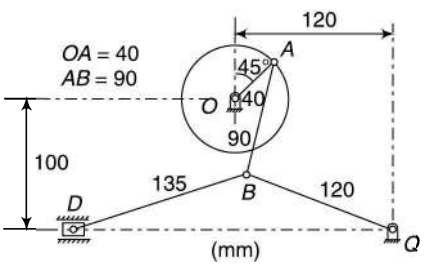

Fig. 3.36

16. In a crank and slotted-lever quick-return mechanism (Fig. 3.15a), the distance between the fixed centres *O* and *A* is 250 mm. Other lengths are: *OP* = 100 mm, *AR* = 400 mm, *RS* = 150 mm and ∠*AOP* = 120°. Uniform speed of the crank is 60 rpm clockwise. Line of stroke of the ram is perpendicular to *OA* and is 450 mm above *A*. Calculate the velocity and the acceleration of the ram *S*. **(0.64 m/s; 1.55 m/s²)**
17. For the inverted slider-crank mechanism of Example 2.13, determine the angular acceleration of the link *QR*. **(358 rad/s)**
18. In the pump mechanism shown in Fig. 3.22(a), the crank *OA* is 50 mm long and the piston rod *AC* is 150 mm long. The lengths *OQ* and *CQ* are 250 mm and 80 mm respectively. The crank rotates at 300 rpm in the clockwise direction. Determine the
    (a) velocity of the piston relative to walls
    (b) angular velocities of rod *AC* and the cylinder
    (c) sliding acceleration of the piston relative to cylinder
    (d) velocity of piston (absolute)
    (e) angular acceleration of the piston rod *BC*
    [(a) 1.51 m/s (b) 2.06 rad/s ccw of both, rod *AC* and cylinder (c) 16 m/s² (d) 1.5 m/s (e) 239 rad/s² ccw]

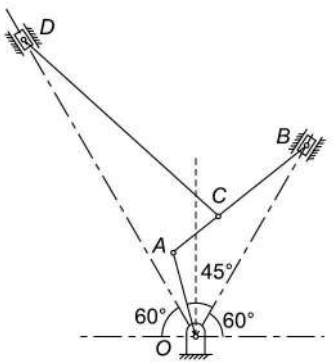

Fig. 3.37

19. In the mechanism shown in Fig. 3.37, the crank *OA* drives the sliders *B* and *D* in straight paths through connecting links *AB* and *CD*. The lengths of the links are *OA* = 150 mm, *AB* = 300 mm, *AC* = 100 mm, *CD* = 450 mm. *OA* rotates at 60 rpm clockwise and at the instant has angular retardation of 16 rad/s². Determine (i) the velocity and acceleration of sliders *B* and *D*, and (ii) the angular velocity and angular acceleration of link *CD*.
    (0.92 m/s, 0.31 m/s, 5.55 m/s², 5.49 m/s²; 2.07 rad/s, 6.53 rad/s²)

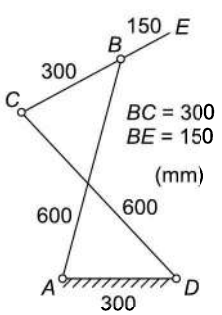

Fig. 3.38

20. For the motion of the coupler relative to the fixed link of the four-link mechanism as shown in Fig. 3.38, locate the position of the centre of curvature of the point *E* using the Bobillier theorem.

4 COMPUTER-AIDED ANALYSIS OF MECHANISMS

Introduction

The analyses of the velocity and the acceleration, given in chapters 2 and 3, depend upon the graphical approach and are suitable for finding out the velocity and the acceleration of the links of a mechanism in one or two positions of the crank. However, if it is required to find these values at various configurations of the mechanism or to find the maximum values of maximum velocity or acceleration, it is not convenient to draw velocity and acceleration diagrams again and again. In that case, analytical expressions for the displacement, velocity and acceleration in terms of the general parameters are derived. A desk-calculator or digital computer facilitates the calculation work.

4.1 FOUR-LINK MECHANISM

Displacement Analysis

A four-link mechanism shown in Fig. 4.1 is in equilibrium. a, b, c and d represent the magnitudes of the links AB, BC, CD and DA respectively. θ, β and φ are the angles of AB, BC and DC respectively with the x-axis (taken along AD). AD is the fixed link. AB is taken as the input link whereas DC as the output link.

As in any configuration of the mechanism, the figure must enclose, the links of the mechanism can be considered as vectors. Thus, vector displacement relationships can be derived as follows.

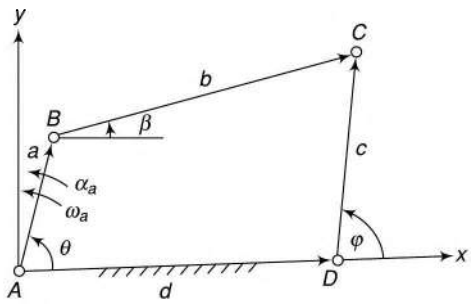

Fig. 4.1

Displacement along x-axis

$$a \cos \theta + b \cos \beta = d + c \cos \phi \tag{4.1}$$

(The equation is valid for $\angle\phi$ more than 90° also.)

or

$$b \cos \beta = c \cos \varphi - a \cos \theta + d$$

or

$$(b \cos \beta)^2 = (c \cos \varphi - a \cos \theta + d)^2$$

$$= c^2 \cos^2 \varphi + a^2 \cos^2 \theta + d^2 - 2ac \cos \theta \cos \varphi - 2ad \cos \theta + 2cd \cos \varphi \tag{4.2}$$

Displacement along y-axis

$$a \sin \theta + b \sin \beta = c \sin \phi \tag{4.3}$$

or $$b \sin \beta = c \sin \varphi - a \sin \theta$$

or $$(b \sin \beta)^2 = (c \sin \varphi - a \sin \theta)^2$$

$$= c^2 \sin^2 \varphi + a^2 \sin^2 \theta - 2ac \sin \theta \sin \varphi \tag{4.4}$$

Adding equations (4.2) and (4.4),

$$b^2 = c^2 + a^2 + d^2 - 2ac \cos \theta \cos \varphi - 2ad \cos \theta + 2cd \cos \varphi - 2ac \sin \theta \sin \varphi \tag{4.5}$$

Put

$$a^2 - b^2 + c^2 + d^2 = 2k$$

Then,

$$2cd \cos \varphi - 2ac \cos \theta \cos \varphi - 2ac \sin \theta \sin \varphi - 2ad \cos \theta + 2k = 0$$

or

$$cd \cos \varphi - ac \cos \theta \cos \varphi - ac \sin \theta \sin \varphi - ac \cos \theta + k = 0 \tag{4.6}$$

From trigonometric identities,

$$\sin \varphi = \frac{2 \tan\left(\frac{\varphi}{2}\right)}{1 + \tan^2\left(\frac{\varphi}{2}\right)}$$

$$\cos \varphi = \frac{1 - \tan^2\left(\frac{\varphi}{2}\right)}{1 + \tan^2\left(\frac{\varphi}{2}\right)}$$

$$cd\left[\frac{1 - \tan^2(\varphi/2)}{1 + \tan^2(\varphi/2)}\right] - ac \cos \theta \left[\frac{1 - \tan^2(\varphi/2)}{1 + \tan^2(\varphi/2)}\right] - ac \sin \theta \left[\frac{2 \tan(\varphi/2)}{1 + \tan^2(\varphi/2)}\right] - ad \cos \theta + k = 0$$

Multiplying throughout by $\left[1 + \tan^2\left(\frac{\varphi}{2}\right)\right]$

$$cd - cd \tan^2\left(\frac{\varphi}{2}\right) - ac \cos \theta + ac \cos \theta \tan^2\left(\frac{\varphi}{2}\right) - 2ac \sin \theta \tan\left(\frac{\varphi}{2}\right)$$

$$- ad \cos \theta - ad \cos \theta \tan^2\left(\frac{\varphi}{2}\right) + k + k \tan^2\left(\frac{\varphi}{2}\right) = 0$$

$$[k - a(d - c) \cos \theta - cd] \tan^2\left(\frac{\varphi}{2}\right) + [-2ac \sin \theta] \tan\left(\frac{\varphi}{2}\right) + [k - a(d + c) \cos \theta + cd] = 0$$

or

$$A \tan^2\left(\frac{\varphi}{2}\right) + B \tan\left(\frac{\varphi}{2}\right) + C = 0$$

where

$$A = k - a\,(d - c) \cos\theta - cd$$
$$B = -2ac \sin\theta$$
$$C = k - a\,(d + c) \cos\theta + cd$$

Equation (4.6) is a quadratic in $\tan\left(\frac{\varphi}{2}\right)$. Its two roots are

$$\tan\left(\frac{\varphi}{2}\right) = \frac{-B \pm \sqrt{B^2 - 4AC}}{2A}$$

or

$$\varphi = 2\tan^{-1}\left[\frac{-B \pm \sqrt{B^2 - 4AC}}{2A}\right] \tag{4.7}$$

Thus, the position of the output link, given by angle φ, can be calculated if the magnitude of the links and the position of the input link are known, i.e., a, b, c, d and θ are known.

A relation between the coupler link position β and the input link position θ can also be found as below:

Equations (4.1) and (4.3) can be written as,

$$c \cos\varphi = a \cos\theta + b \cos\beta - d \tag{4.8}$$

$$c \sin\varphi = a \sin\theta + b \sin\beta \tag{4.9}$$

Squaring and adding the two equations,

$$c^2 = a^2 + b^2 + d^2 + 2ab \cos\theta \cos\beta - 2bd \cos\beta - 2ad \cos\theta + 2ab \sin\theta \sin\beta$$

Put $\quad a^2 + b^2 - c^2 + d^2 = 2k'$

$$-2bd \cos\beta + 2ab \cos\theta \cos\beta + 2ab \sin\theta \sin\beta - 2ad \cos\theta + 2k' = 0$$

$$-bd \cos\beta + ab \cos\theta \cos\beta + ab \sin\theta \sin\beta - ad \cos\theta + k' = 0 \tag{4.10}$$

Equation (4.10) is identical to Eq. 4.6 and can be obtained from the same by substituting β for φ, $-b$ for c and k' for k.

Thus, the solution of Eq. (4.10) will be,

$$\beta = 2\tan^{-1}\left[\frac{-E \pm \sqrt{E^2 - 4DF}}{2D}\right] \tag{4.11}$$

where $\quad D = k' - a(d + b) \cos\theta + bd$

$$E = 2ab \sin\theta$$
$$F = k' - a(d - b) \cos\theta - bd$$

β can also be found directly from relation (4.3) after calculating φ.

Velocity Analysis

Let ω_a, ω_b and ω_c be the angular velocities of the links *AB, BC* and *CD* respectively.
Rewriting Eq. (4.1),

$$a \cos \theta + b \cos \beta - c \cos \phi - d = 0 \tag{4.12}$$

Differentiating it with respect to time,

$$\frac{d}{dt}(a\cos\theta + b\cos\beta - c\cos\varphi - d) = 0$$

$$\frac{d}{d\theta}\frac{d\theta}{dt}(a\cos\theta) + \frac{d}{d\beta}\frac{d\beta}{dt}(b\cos\beta) - \frac{d}{d\varphi}\frac{d\varphi}{dt}(c\cos\varphi) - \frac{d}{dt}(d) = 0$$

$$\frac{d\theta}{dt}\frac{d}{d\theta}(a\cos\theta) + \frac{d\beta}{dt}\frac{d}{d\beta}(b\cos\beta) - \frac{d\varphi}{dt}\frac{d}{d\varphi}(c\cos\varphi) - 0 = 0 \qquad (d \text{ is constant})$$

$$-a\,\omega_a \sin\theta - b\omega_b \sin\beta + c\,\omega_c \sin\phi = 0 \tag{4.13}$$

Similarly, rewriting Eq. (4.3),

$$a \sin \theta + b \sin \beta - c \sin \phi = 0 \tag{4.14}$$

Differentiating it with respect to time,

$$a\,\omega_a \cos\theta + b\omega_b \cos\beta - c\,\omega_c \cos\varphi = 0 \tag{4.15}$$

Multiply Eq. (4.13) by $\cos\beta$ and Eq. (4.15) by $\sin\beta$ and add,

$$a\,\omega_a(\sin\beta\cos\theta - \cos\beta\sin\theta) - c\omega_c(\sin\beta\cos\varphi - \cos\beta\sin\varphi) = 0$$

or $\quad a\,\theta_a \sin(\beta - \theta) - c\omega_c \sin(\beta - \phi) = 0$

or

$$\omega_c = \frac{a\omega_\alpha \sin(\beta - \theta)}{c\sin(\beta - \varphi)} \tag{4.16}$$

Multiply Eq. (4.13) by $\cos\varphi$ and Eq. (4.15) by $\sin\varphi$ and add,

$$a\,\omega_a(\sin\varphi\cos\theta - \cos\varphi\sin\theta) + b\omega_b(\sin\varphi\cos\beta - \cos\varphi\sin\beta) = 0$$

or

$$a\,\omega_a \sin(\varphi - \theta) + b\omega_b \sin(\varphi - \beta) = 0$$

or

$$\omega_b = -\frac{a\omega_\alpha \sin(\varphi - \theta)}{b\sin(\varphi - \beta)} \tag{4.17}$$

Since $a, b, c, \theta, \beta, \varphi$ and ω_a are already known, ω_c and ω_b can be calculated from Eqs (4.16) and (4.17) respectively.

Acceleration Analysis

Let α_a, α_b, and α_c be the angular accelerations of the links *a, b* and *c* respectively.

Differentiating equations (4.13) and (4.15) with respect to time in the above manner or rewriting in the following form,

$$-a\,\omega_a \sin\omega_a t - b\omega_b \sin\omega_b t + c\,\omega_c \sin\omega_c t = 0 \tag{4.18}$$

$$a\,\omega_a \cos\omega_a t + b\omega_b \cos\omega_b t - c\,\omega_c \cos\omega_c t = 0 \tag{4.19}$$

Differentiating these equations with respect to time,

$$(-a\alpha_a \sin\theta - a\omega_a^2 \cos\theta) - (b\alpha_b \sin\beta - b\omega_b^2 \cos\beta) + (c\alpha_c \sin\varphi + c\omega_c^2 \cos\varphi) = 0 \tag{4.20}$$

$$(a\alpha_a \cos\theta - a\omega_a^2 \sin\theta) + (b\alpha_b \cos\beta - b\omega_b^2 \sin\beta) - (c\alpha_c \cos\varphi + c\omega_c^2 \sin\varphi) = 0 \tag{4.21}$$

where $\alpha_\alpha = \dfrac{d\omega_a}{dt}, \alpha_b = \dfrac{d\omega_b}{dt}$ and $\alpha_c = \dfrac{d\omega_c}{dt}$

Multiply Eq. (4.20) by cos φ and Eq. (4.21) by sin φ and add,

$$a\alpha_a (\sin\varphi\cos\theta - \cos\varphi\sin\theta) - a\omega_a^2 (\cos\theta\cos\varphi + \sin\theta\sin\varphi)$$
$$-b\alpha_b (\sin\beta\cos\varphi - \cos\beta\sin\varphi) - b\omega_b^2 (\cos\beta\cos\varphi + \sin\beta\sin\varphi) + c\omega_c^2 = 0$$

or

$$a\alpha_a \sin(\varphi-\theta) - a\omega_a^2 \cos(\varphi-\theta) - b\alpha_b \sin(\beta-\varphi) - b\omega_b^2 \cos(\varphi-\beta) + c\omega_c^2 = 0$$

or

$$\alpha_b = \frac{a\alpha_a \sin(\varphi-\theta) - a\omega_a^2 \cos(\varphi-\theta) - b\omega_b^2 \cos(\varphi-\beta) + c\omega_c^2}{b\sin(\beta-\varphi)} \tag{4.22}$$

Multiply Eq. (4.20) by cos β and Eq. (4.21) by sin β and add,

$$a\alpha_a (\sin\beta\cos\theta - \cos\beta\sin\theta) - a\omega_a^2 (\cos\beta\cos\theta + \sin\beta\sin\theta) - b\omega_b^2$$
$$+c\alpha_c (\sin\varphi\cos\beta - \cos\varphi\sin\beta) + c\omega_c^2 (\cos\beta\cos\varphi + \sin\beta\sin\varphi) = 0$$

or

$$a\alpha_a \sin(\beta-\theta) - a\omega_a^2 \cos(\beta-\theta) - b\omega_b^2 - c\alpha_c \sin(\beta-\varphi) + c\omega_c^2 \cos(\beta-\varphi) = 0$$

or

$$\alpha_c = \frac{a\alpha_a \sin(\beta-\theta) - a\omega_a^2 \cos(\beta-\theta) - b\omega_b^2 + c\omega_c^2 \cos(\beta-\varphi)}{c\sin(\beta-\varphi)} \tag{4.23}$$

```
#include<stdio.h>
  #include<conio.h>
  #include<math.h>
  void main()
  {
    int i,j,iht,th,theta,limit,ins;
    float a,b,c,d,vela,acca,thet,aa,bb,cc,bet1,bet2,betd1,
    betd2,num1,num2,phi1,ph1,unroot,undroot,pi,k,phh,phi2,
    ph2,vel2,dthet;
    float num[2],phi[2],ph[2],bet[2],betd[2],b1[2],b2[2],
    b3[2],b4[2],c1[2],c2[2],c3[2],c4[2],accc[2],accb[2],
    velb[2],velc[2];
    clrscr();

    printf("enter values a,b,c,d,vela,acca,theta,limit\n");
    scanf("%f%f%f%f%f%f%d%d",&a,&b,&c,&d,&vela,&acca,
    &theta,&limit);
    printf( "   thet  vela  acca     phi     beta ");
    printf( "   velc   velb   accc   accb \n");
    ins=1;
    if(vela==0 && acca>0)ins=0;

    pi=4*atan(1);
    iht=360/theta;
    if(vela>0 && acca==0){ins=0;iht=360/theta; }
    if(ins==1)iht=theta;
    dthet=pi*2/iht;
    if(vela==0 && acca>0)iht=iht+limit/theta;
      for(j=0;j<iht+1;j++)
      {
        if(j>(iht-360/theta-1) && ins==0)acca=0;
        thet=j*dthet;
        if(ins==1){j=iht; thet=theta*pi/180;}
        th=theta*j;
        if(ins==1)th=theta;
        k=(a*a-b*b+c*c+d*d)/2;
        aa=k-a*(d-c)*cos(thet)-c*d;
        bb=-2*a*c*sin(thet);
        cc=k-a*(d+c)*cos(thet)+c*d;
        unroot=bb*bb-4*aa*cc;
          if(unroot>0)
```

```
        {
          undroot=sqrt(unroot);
          num[0]=-bb+undroot;
          num[1]=-bb-undroot;
            for(i=0;i<2;i++)
            {
              phi[i]=atan(num[i]*.5/aa)*2;
              ph[i]=phi[i]*180/pi;
              bet[i]=asin((c*sin(phi[i])-a*sin(thet))/b);
              betd[i]=bet[i]*180/pi;
              velc[i]=(a*vela*sin(bet[i]-thet))/(c*sin(bet[i]
              -phi[i]));
              velb[i]=(a*vela*sin(phi[i]-thet))/(b*sin(bet[i]
              -phi[i]));
              c1[i]=a*acca*sin(bet[i]-thet);
              c2[i]=a*pow(vela,2)*cos(bet[i]-thet)+
              b*pow(velb[i],2);
              c3[i]=c*pow(velc[i],2)*cos(phi[i]-bet[i]);
              c4[i]=c*sin(bet[i]-phi[i]);
              accc[i]=(c1[i]-c2[i]+c3[i])/c4[i];
              b1[i]=a*acca*sin(phi[i]-thet);
              b2[i]=a*pow(vela,2)*cos(phi[i]-thet);
              b3[i]=b*pow(velb[i],2)*cos(phi[i]-bet[i])
              -c*pow(velc[i],2);
              b4[i]=b*sin(bet[i]-phi[i]);
              accb[i]=(b1[i]-b2[i]-b3[i])/b4[i];
              printf( "%6.2d %6.2f%8.2f %8.2f %8.2f %6.2f
              %6.2f %6.2f %6.2f\n",th,vela,acca,ph[i],betd[i],
              velc[i],velb[i],accc[i],accb[i]);
            }
        }
        vela=sqrt(vela*vela+2*acca*dthet);
    }
      getch();
}
```

Fig. 4.2

Figure 4.2 shows a program in *C* for solving such a problem. The program can be used to find the angular velocities and accelerations of the output and coupler links for the following cases:

1. Link *AB* is a crank and rotates at uniform angular velocity. In this case, the acceleration of the input link will be zero. If the link *AB* is not a crank but a rocker, the program will make the calculations only for feasible cases.
2. Link *AB* is a crank and starts from the stationary position. In this case, the initial velocity is zero and a value of the acceleration has to be provided along with the limit of the angle up to which the acceleration continues. At that angle when the maximum velocity is attained, the acceleration automatically reduces to zero and the onward the crank starts rotating at constant angular velocity. Further, calculations are made for one complete revolution.
3. For instant values of input velocity and acceleration, only one calculation is made for that specified position.

Various input variables are

`a, b, c, d`	Magnitudes of links *AB, BC, CD* and *DA* respectively (mm)
`vela`	Angular velocity of the input link *AB* (m/s)
`acca`	Angular acceleration of the input link (m/s^2)(acceleration is taken positive, deceleration negative)
`theta`	The interval of the input angle, i.e., the results are to be taken with a difference of 10°, 20° or 30°, etc., starting from zero
`Limit`	Angle up to which acceleration continues (for the case 2; in the other cases any value may be given)

The output variables are

`thet`	Angular displacement of the input link *AB* (degrees)
`phi`	Angular displacement of the output link *DC* (degrees)
`beta`	Angular displacement of the coupler link *BC* (degrees)
`velc`	Angular velocity of the output link *DC* (rad/s)
`velb`	Angular velocity of the coupler link *BC* (rad/s)
`accc`	Angular acceleration of the output link (rad/s^2)
`accb`	Angular acceleration of the coupler link (rad/s^2)

The results are obtained in sets of two possible solutions for each position of the input link. In case the input *AB* is not a crank, the results are obtained for the possible positions only. The counter-clockwise direction is considered as positive and the clockwise as negative.

4.2 USE OF COMPLEX ALGEBRA

For a four-link mechanism, we can write

$$\mathbf{a} + \mathbf{b} - \mathbf{c} - \mathbf{d} = \mathbf{0} \tag{4.24}$$

Transforming it into complex polar form,

$$a\, e^{i\theta} + b\, e^{i\beta} - c\, e^{i\phi} - d = 0 \tag{4.25}$$

Now, we know, $e^{i\,\theta} = \cos\theta + i \sin\theta$

Thus, transforming this equation into complex rectangular form and separating the real and imaginary terms,

$$a \cos\theta + b \cos\beta = d + c \cos\phi \tag{4.26}$$

and

$$a \sin\theta + b \sin\beta = c \sin\phi \tag{4.27}$$

which are the same equations as 4.1 and 4.3 and thus can be solved to find β and θ.

Differentiating Eq. (4.25) with respect to t,

$$ia\dot{\theta}\, e^{i\theta} + ib\dot{\beta}\, e^{i\beta} - ic\dot{\varphi}\, e^{i\varphi} = 0 \tag{4.28}$$

or

$$ia\, \omega_a\, e^{i\,\theta} + ib\, \omega_b\, e^{i\,\beta} - ic\, \omega_c\, e^{i\phi} = 0 \tag{4.29}$$

Again, transforming this equation into complex rectangular form and separating the real and imaginary terms,

$$a\, \omega_a \cos\theta + b\omega_b \cos\beta - c\, \omega_c \cos\varphi = 0 \tag{4.30}$$

$$-a\, \omega_a \sin\theta - b\omega_b \sin\beta + c\, \omega_c \sin\varphi = 0 \tag{4.31}$$

which are the same equations as 4.13 and 4.15 and thus can be solved to find ω_b and ω_c.

Differentiating Eq. (4.28) with respect to t,

$$ia(\ddot{\theta}e^{i\theta} + i\dot{\theta}^2 e^{i\theta}) + ib(\ddot{\beta}\, e^{i\beta} + i\dot{\beta}^2 e^{i\beta}) - ic(\ddot{\varphi}e^{i\varphi} + i\dot{\varphi}^2 e^{i\varphi}) = 0 \tag{4.32}$$

or

$$ia(\alpha_a e^{i\theta} + i\omega_a{}^2 e^{i\theta}) + ib(\alpha_b \ddot{\beta}\, e^{i\beta} + i\omega_b{}^2 e^{i\beta}) - ic(\alpha_c e^{i\varphi} + i\omega_c{}^2 e^{i\varphi}) = 0 \tag{4.33}$$

Transforming this equation into complex rectangular form and separating the real and imaginary terms,

$$-a\alpha_a \sin\theta - a\omega_a^2 \cos\theta - b\alpha_b \sin\beta - b\omega_b^2 \cos\beta + c\alpha_c \sin\varphi + c\omega_c^2 \cos\varphi = 0 \tag{4.34}$$

$$a\alpha_a \cos\theta - a\omega_a^2 \sin\theta + b\alpha_b \cos\beta - b\omega_b^2 \sin\beta - c\alpha_c \cos\varphi + c\omega_c^2 \sin\varphi = 0 \tag{4.35}$$

which are the same equations as 4.20 and 4.21 and can be solved as before.

4.3 THE VECTOR METHOD

We have

$$\mathbf{a} + \mathbf{b} - \mathbf{c} - \mathbf{d} = \mathbf{0}$$

Assuming that the angles β and ϕ have been determined by any of the above methods, differentiate the above equation with respect to time,

$$\omega_{\mathbf{a}} \times \mathbf{a} + \omega_{\mathbf{b}} \times \mathbf{b} - \omega_{\mathbf{c}} \times \mathbf{c} = \mathbf{0} \qquad (a,\ b,\ c \text{ and } d \text{ are constants}) \tag{4.36}$$

Let $\hat{\mathbf{a}}$, $\hat{\mathbf{b}}$ and $\hat{\mathbf{c}}$ be the unit vectors along **a**, **b** and **c** vectors. In plane–motion mechanisms, all the angular velocities are in the **k** direction. Therefore,

$$a\omega_a\, (\mathbf{k} \times \hat{\mathbf{a}}) + b\, \omega_b\, (\mathbf{k} \times \hat{\mathbf{b}}) - c\, \omega_c\, (\mathbf{k} \times \hat{\mathbf{c}}) = \mathbf{0} \tag{4.37}$$

Take the dot product with $\hat{\mathbf{b}}$,

$$a\, \omega_a\, (\mathbf{k} \times \hat{\mathbf{a}}).\, \hat{\mathbf{b}} + b\omega_b\, (\mathbf{k} \times \hat{\mathbf{b}})\, \hat{\mathbf{b}} - c\, \omega_c\, (\mathbf{k} \times \hat{\mathbf{c}})\, \hat{\mathbf{b}} = 0$$

$$a\, \omega_a\, (\mathbf{k} \times \hat{\mathbf{a}}).\, \hat{\mathbf{b}} + \mathbf{0} - c\omega_c\, (\mathbf{k} \times \hat{\mathbf{c}})\, \hat{\mathbf{b}} = 0$$

or

$$\omega_c = -\frac{a\omega_a\, (\mathbf{k} \times \hat{\mathbf{a}}).\, \hat{\mathbf{b}}}{c(\mathbf{k} \times \hat{\mathbf{b}}).\, \hat{\mathbf{b}}} \tag{4.38}$$

Taking the dot product with $\hat{\mathbf{c}}$,

$$a\, \omega_a\, (\mathbf{k} \times \hat{\mathbf{a}}).\, \hat{\mathbf{c}} + b\, \omega_b\, (\mathbf{k} \times \hat{\mathbf{b}}).\, \hat{\mathbf{c}} - c\, \omega_c\, (\mathbf{k} \times \hat{\mathbf{c}})\, \hat{\mathbf{c}} = 0$$

$$a\,\omega_a\,(\mathbf{k}\times\hat{\mathbf{a}})\,.\,\hat{\mathbf{c}} + b\,\omega_b\,(\mathbf{k}\times\hat{\mathbf{b}})\,.\,\hat{\mathbf{c}} - 0 = 0$$

or

$$\omega_b = -\frac{a\,\omega_a\,(\mathbf{k}\times\hat{\mathbf{a}})\,.\,\hat{\mathbf{c}}}{b(\mathbf{k}\times\hat{\mathbf{b}})\,.\,\hat{\mathbf{c}}} \tag{4.39}$$

It can be shown that Eqs 4.38 and 4.39 are the same as Eqs 4.16 and 4.17 as follows:

$$(\mathbf{k}\times\hat{\mathbf{a}})\,.\,\hat{\mathbf{b}} = \begin{vmatrix} \mathbf{i} & \mathbf{j} & \mathbf{k} \\ 0 & 0 & 1 \\ \cos\theta & \sin\theta & 0 \end{vmatrix}\,.\,\hat{\mathbf{b}} = (-\sin\theta.\mathbf{i} + \cos\theta.\mathbf{j})\,.\,\hat{\mathbf{b}}$$

$$= (-\sin\theta.\mathbf{i} + \cos\theta.\mathbf{j})\,.\,(\cos\beta\,\mathbf{i} + \sin\beta\,\mathbf{j})$$

$$= -\sin\theta\cos\beta + \cos\theta\sin\beta$$

$$= \sin(\beta - \theta)$$

Similarly,

$$(\mathbf{k}\times\hat{\mathbf{c}})\,.\,\hat{\mathbf{b}} = \sin(\beta - \phi)$$

Therefore,

$$\omega_c = -\frac{a\omega_a\,(\mathbf{k}\times\hat{\mathbf{a}}).\hat{\mathbf{b}}}{c(\mathbf{k}\times\hat{\mathbf{c}}).\hat{\mathbf{b}}} = \frac{a\omega_\alpha\sin(\beta-\theta)}{c\sin(\beta-\varphi)} \tag{4.40}$$

In the same way,

$$w_b = -\frac{a\,\omega_a\,(\mathbf{k}\times\hat{\mathbf{a}})\,.\,\hat{\mathbf{c}}}{b(\mathbf{k}\times\hat{\mathbf{c}})\,.\,\hat{\mathbf{c}}} = -\frac{a\omega_\alpha\sin(\varphi-\theta)}{b\sin(\varphi-\beta)} \tag{4.41}$$

which are the same equations as equations 4.16 and 4.17.

Differentiating Eq. 4.36 with respect to time to get the accelerations,

$$\dot{\boldsymbol{\omega}}_a\times\mathbf{a} + \boldsymbol{\omega}_a\times(\boldsymbol{\omega}_a\times\mathbf{a}) + \dot{\boldsymbol{\omega}}_b\times\mathbf{b} + \boldsymbol{\omega}_b\times(\boldsymbol{\omega}_b\times\mathbf{b}) - \dot{\boldsymbol{\omega}}_c\times\mathbf{c} - \boldsymbol{\omega}_c\times(\boldsymbol{\omega}_c\times\mathbf{c}) = \mathbf{0}$$

or

$$\boldsymbol{\alpha}_a\times\mathbf{a} + \boldsymbol{\omega}_a\times(\boldsymbol{\omega}_a\times\mathbf{a}) + \boldsymbol{\alpha}_b\times\mathbf{b} + \boldsymbol{\omega}_b\times(\boldsymbol{\omega}_b\times\mathbf{b}) - \boldsymbol{\alpha}_c\times\mathbf{c} - \boldsymbol{\omega}_c\times(\boldsymbol{\omega}_c\times\mathbf{c}) = \mathbf{0}$$

or

$$a\,\alpha_a(\mathbf{k}\times\hat{\mathbf{a}}) - a\,\omega_a^2\,\hat{\mathbf{a}} + b\,\alpha_b(\mathbf{k}\times\hat{\mathbf{b}}) - b\,\omega_b^2\,\hat{\mathbf{b}} - c\alpha_c(\mathbf{k}\times\hat{\mathbf{c}}) + c\,\omega_c^2\,\hat{\mathbf{c}} = 0 \tag{4.42}$$

Take the dot product of this equation with $\hat{\mathbf{b}}$,

$$a\,\alpha_a(\mathbf{k}\times\hat{\mathbf{a}})\,.\,\hat{\mathbf{b}} - a\,\omega_a^2\,\hat{\mathbf{a}}\,.\,\hat{\mathbf{b}} + 0 - b\,\omega_b^2\,\hat{\mathbf{b}}\,.\,\hat{\mathbf{b}} - c\alpha_c(\mathbf{k}\times\hat{\mathbf{c}})\,.\,\hat{\mathbf{b}} + c\,\omega_c^2\,\hat{\mathbf{c}}\,.\,\hat{\mathbf{b}} = 0$$

$$\alpha_c = \frac{a\,\alpha_a(\mathbf{k}\times\hat{\mathbf{a}})\,.\,\hat{\mathbf{b}} - a\,\omega_a^2\,\hat{\mathbf{a}}\,.\,\hat{\mathbf{b}} - b\omega_b^2 + c\omega_c^2\,\hat{\mathbf{c}}\,.\,\hat{\mathbf{b}}}{c(\mathbf{k}\times\hat{\mathbf{c}})\,.\,\hat{\mathbf{b}}} \tag{4.43}$$

Since,

$$(\mathbf{k} \times \hat{\mathbf{a}}) \cdot \hat{\mathbf{b}} = \sin(\beta - \theta),$$
$$\hat{\mathbf{a}} \cdot \hat{\mathbf{b}} = \cos(\beta - \theta),$$
$$\hat{\mathbf{b}} \cdot \hat{\mathbf{b}} = 1$$
$$\hat{\mathbf{c}} \cdot \hat{\mathbf{b}} = \cos(\beta - \varphi)$$
$$(\mathbf{k} \times \hat{\mathbf{c}}) \cdot \hat{\mathbf{b}} = \text{win}(\beta - \varphi)$$

The above equation reduces to

$$\alpha_c = \frac{a\alpha_a \sin(\beta - \theta) - a\omega_a^2 \cos(\beta - \theta) - b\omega_b^2 + c\omega_c^2 \cos(\beta - \varphi)}{c \sin(\beta - \varphi)} \tag{4.44}$$

which is the same as Eq. 4.23.

Taking the dot product of Eq. 4.42 with $\hat{\mathbf{c}}$,

$$a\,\alpha_a(\mathbf{k} \times \hat{\mathbf{a}}) \cdot \hat{\mathbf{b}} - a\,\omega_a^2\,\hat{\mathbf{a}} \cdot \hat{\mathbf{b}} + b\,\alpha_b(\mathbf{k} \times \hat{\mathbf{b}}) \cdot \hat{\mathbf{c}} - b\,\omega_b^2\,\hat{\mathbf{b}} \cdot \hat{\mathbf{c}} + c\,\omega_c^2\,\hat{\mathbf{c}} \cdot \hat{\mathbf{c}} = 0$$

or

$$b = \frac{a\,\alpha_a(\mathbf{k} \times \hat{\mathbf{a}}) \cdot \hat{\mathbf{c}} - a\,\omega_a^2\,\hat{\mathbf{a}} \cdot \hat{\mathbf{c}} - b\omega_b^2\,\hat{\mathbf{b}} \cdot \hat{\mathbf{c}} + c\omega_c^2}{c(\mathbf{k} \times \hat{\mathbf{c}}) \cdot \hat{\mathbf{b}}} \tag{4.45}$$

which can be shown to be the same as Eq. 4.22, i.e.,

$$\alpha_b = \frac{a\alpha_a \sin(\varphi - \theta) - a\omega_a^2 \cos(\varphi - \theta) - b\omega_b^2 \cos(\varphi - \beta) + c\omega_c^2}{b \sin(\beta - \varphi)}$$

***Example* 4.1** *In a four-link mechanism, the dimensions of the links are as under:*
AB = 50 mm, BC = 66 mm, CD = 56 mm and AD = 100 mm
AD is the fixed link. At an instant when DAC is 60°, the angular velocity of the input link AB is 10.5 rad/s in the counter-clockwise direction with an angular retardation of 26 rad/s². Determine analytically the angular displacements, angular velocities and angular accelerations of the output link DC and the coupler BC.

Solution We have,

$2k = a^2 - b^2 + c^2 + d^2$

$k = (50^2 - 66^2 + 56^2 + 100^2)/2$

$= 5640$

$A = k - a\,(d - c)\cos\theta - cd$

$= 5640 - 50\,(100 - 56)\cos 60° - 56 \times 100 = -1060$

$B = -2ac\sin\theta = -2 \times 50 \times 56 \sin 60° = -4850$

$C = k - a\,(d + c)\cos\theta + cd$

$= 5640 - 50\,(100 + 56)\cos 60° + 56 \times 100 = 7340$

$$\varphi = 2\tan^{-1}\left[\frac{-B \pm \sqrt{B^2 - 4AC}}{2A}\right]$$

$$= 2\tan^{-1}\left[\frac{4850 \pm \sqrt{(-4850)^2 - 4 \times (-1060)(7340)}}{2 \times (-1060)}\right]$$

$= 2\tan^{-1}(1.199 \text{ or } -5.759)$

$= 100.35°$ or $-160.3°$

Taking the first value,

we have,

$b \sin\beta = c \sin\varphi - a \sin\theta$

$66 \times \sin\beta = 56 \times \sin 100.35° - 50 \times \sin 60°$

$\sin\beta = 0.1786$

$\beta = 10.29°$

$$\omega_c = \frac{a\omega_\alpha \sin(\beta - \theta)}{c\sin(\beta - \varphi)}$$

$$= \frac{50 \times 10.5 \sin(10.29 - 60^\circ)}{56 \sin(10.29 - 100.35)} = 7.15 \text{ rad/s}$$

$$\omega_b = -\frac{a\omega_\alpha \sin(\varphi - \theta)}{b \sin(\varphi - \beta)} =$$

$$-\frac{50 \times 10.5 \sin(100.35^o - 60^o)}{66 \times \sin(100.35^o - 10.29^o)} = -5.15 \text{ rad/s}$$

$$\alpha_c = \frac{a\alpha_a \sin(\beta - \theta) - a\omega_a^2 \cos(\beta - \theta) - b\omega_b^2 + c\omega_c^2 \cos(\beta - \varphi)}{c \sin(\beta - \varphi)}$$

$$= \frac{50 \times (-26) \sin(10.29^\circ - 60^\circ) - 50 \times 10.5^2 \cos(10.29^\circ - 60^\circ) - 66 \times (5.15)^2 + 56^2 \cos(10.29^\circ - 100.35^\circ)}{56 \sin(10.29^\circ - 100.35^\circ)}$$

$$= 77.26 \text{ rad/s}^2$$

$$\alpha_b = \frac{a\alpha_a \sin(\varphi - \theta) - a\omega_a^2 \cos(\varphi - \theta) - b\omega_b^2 \cos(\varphi - \beta) + c\omega_c^2}{b \sin(\beta - \varphi)}$$

$$= \frac{50 \times (-26) \sin(100.35^\circ - 60^\circ) - 50 \times 10.5^2 \cos(100.35^\circ - 60^\circ) - 66 \times (5.15)^2 \cos(100.35^\circ - 10.29^\circ) + 56 \times 7.15^2)}{56 \sin(10.29^\circ - 100.35^\circ)}$$

$$= 32.98 \text{ rad/s}^2$$

Using the other value of ϕ, ($\phi = -160.3^\circ$), another set of values of velocities and accelerations can be obtained.

The results obtained using the program of Fig. 4.2 are given in Fig. 4.3.

```
Enter values of a, b, c, d, vela, acca, theta, limit
50  66  56  100  10.5  -26  60  0
thet    vela     acca      phi      beta     velc     velb     accc     accb
60      10.5    -26.00   -160.35  -70.29   -7.15     5.15    50.04    94.32
60      10.50   -26.00    100.35   10.29    7.15    -5.15    77.26    32.98
```

Fig. 4.3

[Compare these values of ω_b, ω_c, α_b and α_c at 60° with the values obtained graphically in Examples 2.1 and 3.1]

***Example* 4.2** *In a four-link mechanism, the dimensions of the links are as under:*
AB = 20 mm, BC = 66 mm, CD = 56 mm and AD = 80 mm
AD is the fixed link. The crank AB rotates at uniform angular velocity of 10.5 rad/s in the counter-clockwise direction. Determine using the program of Fig. 4.2, the angular displacements, angular velocities and angular accelerations of the output link DC and the coupler BC for a complete revolution of the crank at an interval of 40°.

Solution The results obtained using the program of Fig. 4.2 are given in Fig. 4.4.

```
Enter values of a, b, c, d, vela, acca, theta, limit
20  66  56  80  10.5  40  0
thet    vela     acca      phi      beta     velc     velb    aqccc     accb
00      10.5     0.0    -110.74  -52.51   -3.50    -3.50   -37.58    18.56
00      10.5     0.0     110.74   52.51   -3.50    -3.50    37.58   -18.56
40      10.5     0.0    -126.30  -61.47   -4.06    -0.83    15.50    50.99
40      10.5     0.0     103.82   38.99    0.07    -3.15    56.46    20.96
80      10.5     0.0    -139.02  -58.74   -2.51     2.03    26.17    31.04
80      10.5     0.0     110.16   29.87    2.92    -1.62    27.30    22.42
```

(contd.)

120	10.5	0.0	-145.28	-48.22	-0.77	3.20	26.64	4.54
120	10.5	0.0	123.49	26.44	3.77	-0.20	-0.66	21.44
160	10.5	0.0	-144.69	-36.44	1.12	2.75	29.94	-16.40
160	10.5	0.0	136.77	28.52	2.96	1.32	-22.41	23.99
200	10.5	0.0	-136.77	-28.52	2.96	1.32	22.41	-23.99
200	10.5	0.0	144.69	36.44	1.12	2.75	-29.94	16.40
240	10.5	0.0	-123.49	-26.44	3.77	-0.20	0.66	-21.44
240	10.5	0.0	145.28	48.22	-0.77	3.20	-26.64	-4.54
280	10.5	0.0	-110.16	-29.87	2.92	-1.62	-27.30	22.42
280	10.5	0.0	139.02	58.74	-2.51	2.03	-26.17	-31.04
320	10.5	0.0	-103.82	-38.99	0.07	-3.15	-56.46	-20.96
320	10.5	0.0	126.30	61.47	-4.06	-0.83	-15.50	-50.99

Fig. 4.4

4.4 SLIDER-CRANK MECHANISM

Figure 4.5 shows a slider-crank mechanism in which the strokeline of the slider does not pass through the axis of rotation of the crank. Angle β in clockwise direction from the x-axis is taken as negative.

Let e = eccentricity (distance CD).

Displacement along x-axis,

$$a\cos\theta + b\cos(-\beta) = d \qquad (4.46)$$

or

$$b\cos\beta = d - a\cos\theta \qquad (4.46a)$$

Displacement along y-axis,

$$a\sin\theta + b\sin(-\beta) + e \qquad (4.47)$$

or

$$b\sin\beta = e - a\sin\theta \qquad (4.47a)$$

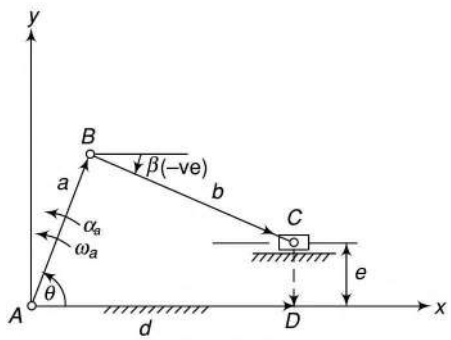

Fig. 4.5

Squaring Eqs (4.46a) and (4.47a) and adding,

$$b^2 = a^2\cos^2\theta + d^2 - 2ad\cos\theta + a^2\sin^2\theta + e^2 - 2ae\sin\theta$$
$$= a^2 + e^2 + d^2 - 2ae\sin\theta - 2ad\cos\theta$$

or

$$d^2 - (2a\cos\theta)d + a^2 - b^2 + e^2 - 2ae\sin\theta = 0$$

or

$$d^2 + C_1 d + C_2 = 0 \qquad (4.48)$$

where $C_1 = -2a\cos\theta$

$C_2 = a^2 - b^2 + e^2 - 2ae\sin\theta$

Equation (4.48) is a quadric in d. Its two roots are,

$$d = \frac{-C_1 \pm \sqrt{C_1^2 - 4C_2}}{2} \tag{4.49}$$

Thus, if the parameters *a, b, e* and θ of the mechanism are known, the output displacement can be computed.

Also, from Eq. (4.47a),

$$\beta = \sin^{-1} \frac{e - a \sin\theta}{b} \tag{4.50}$$

Velocity Analysis

Differentiating Eqs. (4.46) and (4.47) with respect to time,

$$-a\omega_a \sin\theta - b\,\omega_b \sin\beta - \dot{d} = 0 \tag{4.51}$$

$$a\omega_a \cos\theta + b\,\omega_b \cos\beta = 0 \tag{4.52}$$

Multiply Eq. (4.51) by $\cos\beta$ and Eq. (4.52) by $\sin\beta$ and add,

$$a\omega_a (\sin\beta \cos\theta - \cos\beta \sin\theta) - \dot{d} \cos\beta = 0$$

$$\dot{d} = \frac{a\omega_a \sin(\beta - \theta)}{\cos\beta} = \tag{4.53}$$

From Eq. (4.52),

$$\omega_b = -\frac{a\omega_a \cos\theta}{b\cos\beta} \tag{4.54}$$

ω_b provides the angular velocity of the coupler-link whereas $\dot{d}$ gives the linear velocity of the slider.

Acceleration Analysis

Differentiating Eqs (4.51) and (4.52) with respect to time,

$$-\left[a\alpha_a \sin\theta + a\omega_a^2 \cos\theta\right] - \left[b\alpha_b \sin\beta + b\omega_b^2 \cos\beta\right] - \ddot{d} = 0 \tag{4.55}$$

$$\left[a\alpha_a \cos\theta + a\omega_a^2 \sin\theta\right] - \left[b\alpha_b \cos\beta + b\omega_b^2 \sin\beta\right] = 0 \tag{4.56}$$

Multiply Eq. (4.55) by $\cos\beta$ and Eq. (4.56) by $\sin\beta$ and add,

or $$a\alpha_a \sin(\beta - \theta) - a\omega_a^2 \cos(\beta - \theta) - b\omega_b^2 - \ddot{d} \cos\beta = 0$$

$$\ddot{d} = \frac{a\alpha_a \sin(\beta - \theta) - a\omega_a^2 \cos(\beta - \theta) - b\omega_b^2}{\cos\beta} \tag{4.57}$$

From Eq. (4.56)

$$\alpha_b = \frac{a\alpha_a \cos\theta - a\omega_a^2 \sin\theta - b\omega_b^2 \sin\beta}{b\cos\beta} \tag{4.58}$$

α_b provides the angular acceleration of the coupler-link whereas $\ddot{d}$ gives the linear acceleration of the slider.

Figure 4.6 shows a program to solve this type of problem. It can be used for the same type of three cases as for the four-link mechanism.

```
#include<stdio.h>
#include<conio.h>
#inculde<math.h>
void main()
{
     int j,iht,th,theta,limit,ins;
     float a,b,e,c1,c2,c3,c4,vela,acca,thet,pi,dthet,bet,
     velb,vels,accs,accb;
     clrscr();

     printf("enter values a,b,e,vela,acca,theta,limit\n");
     scanf("%f%f%f%f%f%d%d%",&a,&b,&e,&vela,&acca,&theta,
     &li    mit);
     printf( " thet vela acca beta ");
     printf( " velc velb accc accb \n");
     ins=1;
     if(vela==0 && acca>0)ins=0;
     pi=4*atan(1);
     iht=360/theta;
     if(vela>0 && acca==00) {ins=0;iht=360/theta; }
     if(ins==1)iht=theta;
     dthet=pi*2/iht;
     if(vela==0 && acca>0)iht=iht+limit/theta;
            for(j=0;j<iht+1;j++)
            {
              if(j>(iht-360/theta-1) && ins==0)acca=0;
              thet=j*dthet;
              if(ins==1) {j=iht; thet=theta*pi/180;}
              th=theta*j;
              if(ins==1)th=theta;
              bet=asin((e-a*sin(thet))/b);
              vels=-a*vela*sin(thet-bet)/(cos(bet)*1000);
              velb=-a*vela*cos(thet)/b*cos(bet);
              c1=a*acca*sin(bet-thet)-b*pow(velb,2);
              c2=a*pow(vela,2)*cos(bet-thet);
              accs=(c1-c2)/(cos(bet)*1000);
              c3=a*acca*cos(thet)-a*pow(vela,2)*sin(thet);
              c4=b*pow(velb,2)*sin(bet);
              accb=-(c3-c4)/(b*cos(bet));
              printf( "%6.2d %6.2f %6.2f %6.2f %6.2f%8.2f
              %8.2f %8.2f\n",th,vela,acca,bet*180/pi,vels,
              velb,accs,accb);
              vela=sqrt(vela*vela+2*acca*dthet);

            }
     getch();
}
```

Fig. 4.6

The input variables are

`a,b,e`	The magnitudes *a, b* and *e* respectively (mm)
`vela`	Angular velocity of the input link *AB* (m/s)
`acca`	Angular acceleration of the input link (m/s^2)
`theta`	The interval of the input angle (degrees)
`limit`	Angle up to which acceleration continues, in case the crank starts from stationary position (in other cases any value may be given)

The output variables are

`thet`	Angular displacement of the input link *AB* (degrees)
`bet`	Angular displacement of link *AB* (rad/s)
`vels`	Linear velocity of the slider (m/s)
`velb`	Angular velocity of link *BC* (rad/s)
`accs`	Linear acceleration of the slider (m/s^2)
`accb`	Angular acceleration of link *BC* (rad/s^2)

***Example* 4.3** *In a slider-crank mechanism, the lengths of the crank and the connecting rod are 480 mm and 1.6 m respectively. It has an eccentricity of 100 mm. Assuming a velocity of 20 rad/s of the crank OA, calculate the following at an interval of 30°:*

(i) Velocity and the acceleration of the slider
(ii) Angular velocity and angular acceleration of the connecting rod

Solution The input and the output have been shown in Fig. 4.7. The results have been obtained at an interval of 30° of the input link (crank).

```
Enter values of a, b, e, vela, acca, theta, limit
480  1600  100  20  0  30  0
```

thet	vela	acca	beta	vels	velb	accs	accb
00	20.0	0.0	3.58	0.60	-5.99	-249.49	2.25
30	20.0	0.0	-5.02	-5.53	-5.18	-200.88	57.88
60	20.0	0.0	-11.38	-9.28	-2.94	-76.65	104.27
90	20.0	0.0	-13.74	-9.60	0.00	46.94	123.53
120	20.0	0.0	-11.38	-7.35	2.94	115.35	104.27
150	20.0	0.0	-5.02	-4.07	5.18	131.67	57.88
180	20.0	0.0	3.58	-0.60	5.99	134.51	2.25
210	20.0	0.0	12.27	2.99	5.08	144.94	-55.80
240	20.0	0.0	18.80	6.68	2.84	138.98	-107.04
270	20.0	0.0	21.25	9.60	-0.00	74.68	-128.76
300	20.0	0.0	18.80	9.95	-2.84	-53.02	-107.04
330	20.0	0.0	12.27	6.61	-5.08	-187.61	-55.80

Fig. 4.7

4.5 COUPLER CURVES

A coupler curve is the locus of a point on the coupler link. A four-link mechanism *ABCD* with a coupler point *E* (offset) is shown in Fig. 4.8. Let the *x*-axis be along the fixed link *AD*.

Let $BE = e$ and $\angle CBE = \alpha$

Angles β and γ are defined as shown in the diagram.

Let X_e and Y_e be the coordinates of the point *E*.

Then,

$$X_e = a\cos\theta + e\cos(\alpha+\beta) \quad (4.59)$$

$$Y_e = a\sin\theta + e\sin(\alpha+\beta) \quad (4.60)$$

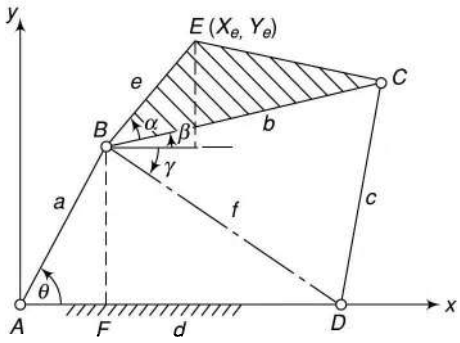

Fig. 4.8

In these equations *a, e,* θ and α are known. To know the coordinates X_e and Y_e, it is necessary to express β in terms of known parameters, i.e., *a, b, c, d, e,* θ and α.

In ΔBDC, applying cosine law,

$$\cos(\beta+\gamma) = \frac{b^2+f^2-c^2}{2bf}$$

or

$$\beta+\gamma = \cos^{-1}\left[\frac{b^2+f^2-c^2}{2bf}\right]$$

$$\beta = \cos^{-1}\left[\frac{b^2+f^2-c^2}{2bf}\right] - \gamma \quad (4.61)$$

where

$$\tan\gamma = \frac{BF}{FD} = \frac{BF}{AD-AF} = \frac{a\sin\theta}{d-a\cos\theta}$$

or

$$\gamma = \tan^{-1}\left[\frac{a\sin\theta}{d-a\cos\theta}\right] \quad (4.62)$$

f^2 can be found by applying the cosine law to ΔABD,

i.e.,

$$f^2 = a^2 + d^2 - 2ad\cos\theta$$

Having found the value of the angle β, the coordinates of the point *E* can be known for different values of θ from Eqs (4.59) and (4.60).

A coupler curve can also be obtained in case of a slider-crank mechanism (Fig. 4.9). The angle *CBE* is α and the eccentricity is *e*.

Draw $BL \perp AD$ and $CF \perp BL$

$$X_e = a\cos\theta + e\cos(\alpha-\beta) \quad (4.63)$$

$$Y_e = a\sin\theta + e\sin(\alpha-\beta) \quad (4.64)$$

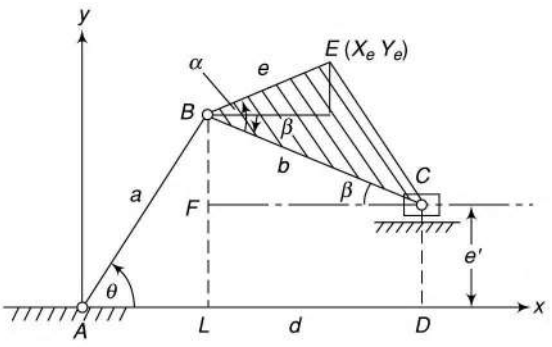

Fig. 4.9

β (negative) can be expressed in terms of known parameters as below:

$$\sin\beta = \frac{BF}{BC} = \frac{BL - FL}{BC} = \frac{a\sin\theta - e'}{b}$$

$$\beta = \sin^{-1}\left[\frac{a\sin\theta - e'}{b}\right] \tag{4.65}$$

Figure 4.10 shows a program to find the coordinates of the coupler point for both the above cases.

The input variables are

`a, b, e`	The magnitudes *a, b* and *e* respectively (mm)
`case`	1, in case of a four-link mechanism
	2, in case of a slider-crank mechanism
`c`	The magnitude *c* (case 1) or eccentricity e' (case 2)
`d`	The magnitude *d* (case 1) or 0 (case 2)
`alph`	The angle α (degrees)

The output variables are:

`thet`	Angular displacement of the link *AB* (degrees)
`xe`	X-coordinates of the point *E*
`ye`	Y-coordinates of the point *E*

```
#inculde<stdio.h>
#inculde<conio.h>
#inculde<math.h>
void main()
{
    int cas;
    float a,b,c,d,e,f,alph,gamm,bet,squ,pi,thet,theta,
    xe,ye;
    clrscr();

    printf("enter values of a,b,c,d,e,alph,cas,theta\n");
    scaf("%f%f%f%f%f%f%d%f",&a,&b,&c,&d,&e,&alph,
    &cas,theta);
    printf("     theta         xe         ye\n");
    thet=0;
    pi=4*atan(1);
          while(thet<359*pi/180)
          {
                gamm=atan(a*sin(thet)/(d-a*cos(thet)));
                squ=a*a+d*d-2*a*d*cos(thet);
                f=pow(squ,.5);
                if (cas==1)bet=acos((b*b+f*f-c*c)/2*b*f))-gamm;
                if (cas==2) bet=asin((c-a*sin(thet))/b);
                xe=a*cos(thet)+e*cos(alph*pi/180+bet);
                ye=a*sin(thet)+e*sin(alph*pi/180+bet);
                printf( "%10.2f %10.2f %10.2f \n",
                thet*180/pi,xe,ye);thet=thet+theta*pi/180;
          }
    getch();
}
```

Fig. 4.10

Example 4.4 *Draw a coupler curve of the coupler point E of a four-link mechanism having the following data:*

AB = 50 mm, BC = 66 mm, CD = 90 mm,
AD = 100 mm, BE = 30 mm ∠CBE = 40°
(refer to Fig. 4.8)

```
Enter values of a, b, c, d, e, alph,
cas theta
50  66  90  100  30  40  1  30
     theta          xe          ye
       0.0         26.73       18.93
      30.0         35.27       53.90
      60.0         29.79       72.92
      90.0         11.70       77.62
     120.0         -9.51       68.99
     150.0        -26.10       49.58
     180.0        -34.41       25.63
     210.0        -35.43        3.95
     240.0        -28.72      -13.53
     270.0        -15.08      -24.06
     300.0          1.75      -24.35
     330.0         16.54      -11.44
```

Fig. 4.11

Solution The input and the output have been shown in Fig. 4.11 using the program of Fig. 4.10 for the given date. The required coupler curve has been shown in Fig. 4.12.

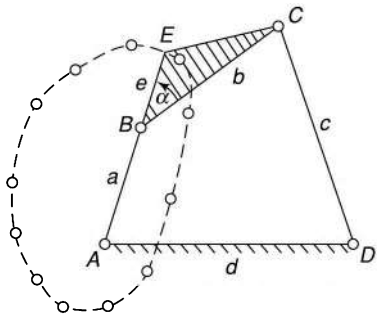

Fig. 4.12

Summary

1. To draw velocity and acceleration diagrams again and again for different positions of the crank is not convenient. Analytical methods prove to be very helpful.
2. In analytical methods, the links of the mechanism are considered as vectors.
3. In a four-link mechanism,
   (i) The angle of the output link is given by

$$\varphi = 2\tan^{-1}\left[\frac{-B \pm \sqrt{B^2 - 4AC}}{2A}\right]$$

where $2k = a^2 - b^2 + c^2 + d^2$
$A = k - a(d - c)\cos\theta - cd$
$B = -2ac\sin\theta$
$C = k - a(d + c)\cos\theta + cd$

   (ii) The angle of the coupler link is given by

$$\beta = 2\tan^{-1}\left[\frac{-E \pm \sqrt{E^2 - 4DF}}{2D}\right]$$

where $2k' = a^2 + b^2 - c^2 + d^2$
$D = k' - a(d + b)\cos\theta + bd$
$E = 2ab\sin\theta$
$F = k' - a(d - b)\cos\theta - bd$

   (iii) The velocities of the output and coupler links are given by

$$\omega_c = \frac{a\omega_\alpha \sin(\beta - \theta)}{c\sin(\beta - \varphi)} \text{ and } \omega_b = -\frac{a\omega_\alpha \sin(\varphi - \theta)}{b\sin(\varphi - \beta)}$$

   (iv) The accelerations of the output and coupler links are given by

$$a_c = \frac{a\alpha_a \sin(\beta - \theta) - a\omega_a^2 \cos(\beta - \theta) - b\omega_b^2 + c\omega_c^2 \cos(\beta - \varphi)}{c\sin(\beta - \varphi)}$$

and

$$a_b = \frac{a\alpha_a \sin(\varphi - \theta) - a\omega_a^2 \cos(\varphi - \theta) - b\omega_b^2 \cos(\varphi - \beta) + c\omega_c^2}{b\sin(\beta - \varphi)}$$

4. In a slider-crank mechanism,
   (i) The displacement of the slider is given by

$$d = \frac{-C_1 \pm \sqrt{C_1^2 - 4C_2}}{2}$$

where $C_1 = -2a\cos\theta$
$C_2 = a^2 - b^2 + e^2 - 2ae\sin\theta$

(ii) The angle of the coupler, $\beta = \sin^{-1}\dfrac{e - a\sin\theta}{b}$

(iii) The velocities of the slider and the angular velocity of the coupler are given by

$$\dot{d} = \frac{a\omega_a \sin(\beta - \theta)}{\cos\beta} \quad \text{and} \quad \omega_b = \frac{a\omega_a \cos\theta}{b\cos\beta}$$

(iv) The accelerations of the slider and the angular velocity of the coupler are given by

$$\ddot{d} = \frac{a\alpha_a \sin(\beta - \theta) - a\omega_a^2 \cos(\beta - \theta) - b\omega_b^2}{\cos\beta} \quad \text{and}$$

$$\alpha_b = \frac{a\alpha_a \cos\theta - a\omega_a^2 \sin\theta - b\omega_b^2 \sin\beta}{b\cos\beta}$$

Exercises

1. Find expressions to determine the angles of the output link and coupler of a four-link mechanism. Deduce relations for the angular velocity and accelerations of the same links.
2. Deduce expressions to find the linear velocity and acceleration and angular velocity and angular acceleration of the coupler of a slider-crank mechanism.
3. What are coupler curves? Deduce expressions to draw the same in case of a four-link mechanism and slider-crank mechanism.
4. Derive expressions for the displacement, velocity and acceleration analyses of an inverted slider-crank mechanism.
5. In a four-link mechanism (Fig. 4.1), the dimensions of the links are *AB* = 30 mm, *BC* = 80 mm, *CD* = 40 mm and *AD* = 75 mm. If *OA* rotates at a constant angular velocity of 30 rad/s in the clockwise direction, calculate the angular velocities and the angular accelerations of links *BC* and *CD* for values of θ at an interval of 30°.
6. In a slider-crank mechanism (Fig. 4.5), the crank *AB* = 50 mm, *BC* = 160 mm and eccentricity *e* = 15 mm. For the angle θ = 45°, angular velocity of *AB* = 8 rad/s with an angular acceleration of 12 rad/s² (both clockwise), find the linear velocity and the acceleration of the slider and the angular velocity and the angular acceleration of the connecting rod analytically.
   (0.32 m/s, 1.98 m/s², 1.78 rad/s, 16.53 rad/s²)
7. Derive expressions to find the angular displacement, angular velocity and the angular acceleration of the link *EF* of a six-link mechanism shown in Fig. 4.13. *AB* is the input link having an angular velocity of ω rad/s in the counter-clockwise direction.

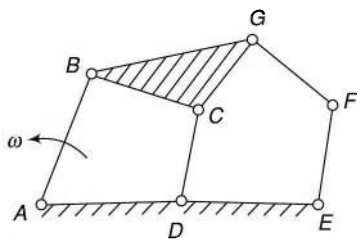

Fig. 4.13

8. Derive expressions for the coupler curves of an inverted slider-crank mechanism.
9. For the data of Example 4.3, take some more coupler points by taking different values of *BE* and $\angle\alpha$ and draw coupler curves for the same. Make a cardboard model of the mechanism and obtain the coupler curve by rotating the crank through 360°.

5 GRAPHICAL AND COMPUTER-AIDED SYNTHESIS OF MECHANISMS

Introduction

Dimensional synthesis of a pre-conceived type mechanism necessitates determining the principal dimensions of various links that satisfy the requirements of motion of the mechanism. A mechanism of preconceived type may be a four-link or a slider-crank mechanism. Principal dimensions involve link lengths, angular positions, position of pivots, eccentricities, angle between bell-crank levers and linear distance of sliders, etc. Synthesis of mechanisms may be done by graphical methods or by analytical means that involves the use of calculators and computers. In general, the types of synthesis may be classified as under:

1. *Function generation* It requires correlating the rotary or the sliding motion of the input and the output links. The motion of the output and the input links may be prescribed by an arbitrary function $y = f(x)$. This means if the input link moves by x, the output link moves by $y = f(x)$ for the range $x_o \leq x \leq x_{n+1}$ There lies n values of independent parameters $(x_1, x_2, \ldots x_n)$ in the range between x_o and $x_{n=1}$. In case of rotary motions of the input and the output links, when the input link rotates through an angle θ, the output link moves through an angle ϕ corresponding to the value of the dependent variable $y = f(x)$. In case of slider-crank mechanism, the output is in the form of displacement s of the slider. It is to be noted that a four-link mechanism can match the function at only a limited number of prescribed points. However, it is a widely used mechanism in the industry since a four-bar is easy to construct and maintain and in most of the cases exact precision at many points is not required.
2. *Path generation* When a point on the coupler or the floating link of a mechanism is to be guided along a prescribed path, it is said to be a path generation problem. This guidance of the path of the point may or may not be coordinated with the movement of the input link and is generally called *with prescribed timing* or *without prescribed timing*.
3. *Motion generation* In this type, a mechanism is designed to guide a rigid body in a prescribed path. This rigid body is considered to be the coupler or the floating link of a mechanism.

If the above tasks are to be accomplished at fewer positions, it is simple to design a mechanism. However, when it is required to synthesize a mechanism to satisfy the input and the output links at larger number of positions, only an approximated solution can be obtained giving least deviation from the specified positions. In this chapter, both graphical as well as analytical methods to design a four-link mechanism and a slider-crank mechanism are being discussed.

PART A: GRAPHICAL METHODS

5.1 POLE

If it is desired to guide a body or link in a mechanism from one position to another, the task can easily be accomplished by simple rotation of the body about a point known as the *pole*. In Fig. 5.1, a link B_1C_1 is

shown to move to another position B_2C_2 by rotating it about the pole P_{12}. This pole is easily found graphically by joining the midnormals of any two corresponding points on the link such as B_1B_2 and C_1C_2. If the pole point happens to fall off the frame of the machine, two fixed pivots, one each anywhere along the two midnormals will serve the purpose. In the figure, A and B are taken to be the fixed pivots. The configuration also happens to be a four-link mechanism $ABCD$ in two positions AB_1C_1D and AB_2C_2D in which the coupler link BC has moved from the position B_1C_1 to B_2C_2. The input link AB and the output link DC have moved through angles θ_{12} and ϕ_{12} respectively in the clockwise direction (Fig. 5.1).

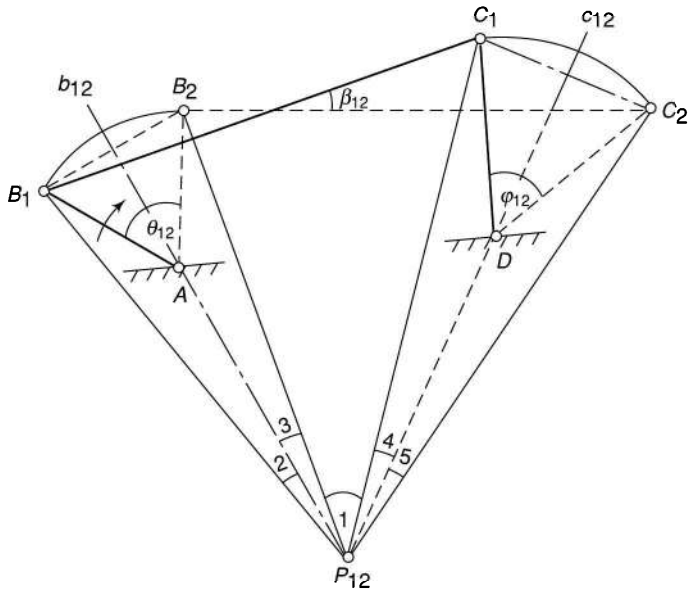

Fig. 5.1

Thus, a pole P_{12} of the coupler link BC is its centre of rotation with respect to the fixed link for the motion of the coupler from B_1C_1 to B_2C_2. Each point on the link BC describes a circular arc with centre at the pole P_{12}. Thus, a line joining the two positions of a point on the link is a chord of the circle and the midnormal (perpendicular bisector) of the chord passes through the centre of rotation P_{12}. B and C are also two points on the link BC. B moves from B_1 to B_2 while C from C_1 to C_2. Therefore, B_1B_2 and C_1C_2 are the chords of the two circles and their midnormals b_{12} and c_{12} also pass through or intersect at the centre of their rotation, i.e., at P_{12}.

Properties of Pole Point

1. As $AB_1 = AB_2$, the midnormal b_{12} of B_1B_2 passes through the fixed pivot A. Similarly, the midnormal of C_1C_2 passes through pivot D.
2. The coupler link BC is rotated about P_{12} from the position B_1C_1 to B_2C_2,
   $\therefore \quad \Delta B_1P_{12}C_1 \equiv \Delta B_2P_{12}C_2$
   $\therefore \quad \angle 2 + \angle 3 + \angle 1 = \angle 1 + \angle 4 + \angle 5$
   i.e., angle subtended by B_1C_1 at P_{12} = angle subtended by B_2C_2 at P_{12}
   or the angle subtended by BC at P_{12} in two positions is the same.
3. From (2), $\angle 2 + \angle 3 + \angle 1 = \angle 1 + \angle 4 + \angle 5$
   or $\quad \angle 2 + \angle 3 = \angle 4 + \angle 5$
   i.e., B_1B_2 and C_1C_2 subtend equal angles at P_{12}.
4. P_{12} lies on the midnormal of B_1B_2,
   $\therefore \quad \angle 2 = \angle 3$
   Similarly, $\angle 4 = \angle 5$
5. $\quad \angle 2 + \angle 3 = \angle 4 + \angle 5$
   But $\angle 2 = \angle 3$ and $\angle 4 = \angle 5$,

$\therefore \quad \angle 2 = \angle 4$

and $\quad \angle 3 = \angle 5$

i.e., the input and the output links subtend equal angles at P_{12} in their corresponding positions.

6. $\angle 2 + \angle 3 + \angle 1 = \angle 1 + \angle 4 + \angle 5$

$= \angle 1 + \angle 4 + \angle 3 \qquad (\angle 3 = \angle 5)$

i.e., the angle subtended by the coupler link is equal to that subtended by the fixed pivots A and D.

7. The triangle $B_1P_{12}C_1$ moves as one link about P_{12} to the position $B_2P_{12}C_2$,

Angular displacement of coupler B_1C_1 = Angular displacement of $P_{12}C_1$ = Angular displacement of $P_{12}B_1$

i.e., $\quad \beta_{12} = \angle 4 + \angle 5 = \angle 2 + \angle 3$

5.2 RELATIVE POLE

A *pole* of a moving link is the centre of its rotation with respect to a fixed link. However, if the rotation of the link is considered relative to another moving link, the pole is known as the *relative pole*. The relative pole can be found by fixing the link of reference and observing the motion of the other link in the reverse direction.

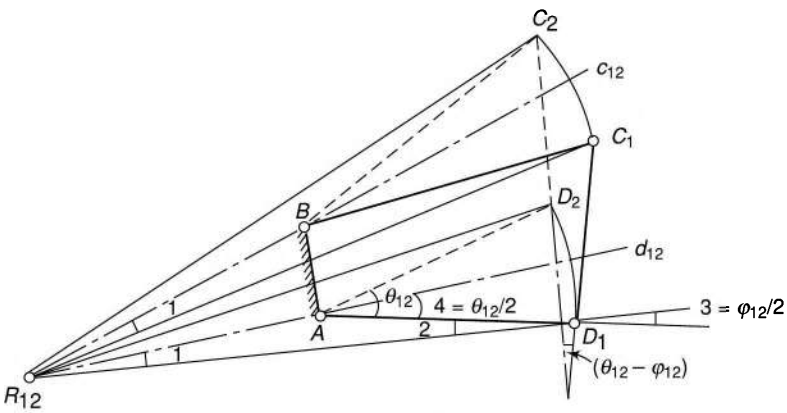

Fig. 5.2

For the four-link mechanism of Fig. 5.2, the pole of BC relative to AB is at the pivot B. The pole of DC relative to AB can be found as follows:

Let θ_{12} = angle of rotation of AB (clockwise)

φ_{12} = angle of rotation of DC (clockwise)

Make the following constructions:

1. Assume A and B as the fixed pivots and rotate AD_1 about A through angle θ_{12} in the counter-clockwise direction (opposite to the direction of rotation of AB). Let D_2 be the new position after the rotation of AD (AB fixed).
2. Locate the point C_2 by drawing arcs with centres B and D_2 and radii equal to BC_1 and D_1C_1 respectively. Then ABC_2D_2 is known as the inversion of ABC_1D_1.
3. Draw midnormals of D_1D_2 and C_1C_2 which pass through A and B and intersect at R_{12} which is the required relative pole.

Now $(\varphi_{12} - \theta_{12})$ = Angle of rotation of the output link DC relative to the input link AB.

This angle is negative if $DC > AB$ and is positive if $DC < AB$.

Angular displacement of $R_{12}\,D_1$ = angular displacement of D_1C_1

[Refer Sec. 5.2 (7)]

$\angle D_1R_{12}D_2 = -(\angle\varphi_{12} - \angle\theta_{12})$ (assuming $DC > AB$)

or $\quad 2\,\angle 1 = -(\angle\varphi_{12} - \angle\theta_{12})$

or $$\angle 1 = -\frac{1}{2}(\angle\varphi_{12} - \angle\theta_{12})$$

In $\Delta\, AR_{12}D_1$, $$\angle 4 = \angle 1 + \angle 2$$

or $$\frac{1}{2}\angle\theta_{12} = -\frac{1}{2}(\angle\varphi_{12} - \angle\theta_{12}) + \angle 3 \qquad (\angle 2 = \angle 3)$$

$$= -\frac{1}{2}\angle\varphi_{12} + \frac{1}{2}\angle\theta_{12} + \angle 3$$

or $$\angle 3 = \frac{1}{2}\angle\varphi_{12}$$

The conclusion, just arrived, provides a method to locate the pole of the output link *DC* relative to the input link *AB*.

Procedure

1. Join *A* and *D*, the centres of the pivots.
2. Rotate *AD* about *A* through an angle $\theta_{12}/2$ in a direction opposite to that of *AB*.
3. Again rotate *AD* about *D* through an angle $\varphi_{12}/2$ in a direction opposite to that of *DC*. The point of intersection of the two positions of *AD* after rotation about *A* and *D*, is the required relative pole R_{12}. The angles subtended by D_1D_2 and C_1C_2 at R_{12} are the same,

   i.e., $\angle D_1R_{12}D_2 = \angle C_1R_{12}C_2$

   or $2\,\angle D_1R_{12}A = 2\,\angle C_1R_{12}B$

   or $\angle D_1R_{12}A = \angle C_1R_{12}B$

Thus, it is also concluded that the angle subtended by the fixed pivots (*A* and *D*) at the relative pole is equal to the angle subtended by the coupler *BC* (Refer Sec. 5.1 also).

Now, consider the slider-crank mechanism of Fig. 5.3. In this, if *C* reciprocates through a horizontal distance *s*, its centre of rotation will lie at infinity on a vertical line where the point *D* can also be assumed to lie. Then *AD* will also be a vertical line through *A*. Rotate *AD* about *A* through $\theta_{12}/2$ in the counter-clockwise direction as usual. Rotating *AD* about *D* through $\varphi_{12}/2$ would mean a vertical line towards the left of *A*, at a distance of *s*/2. The intersection of the two lines locates R_{12}.

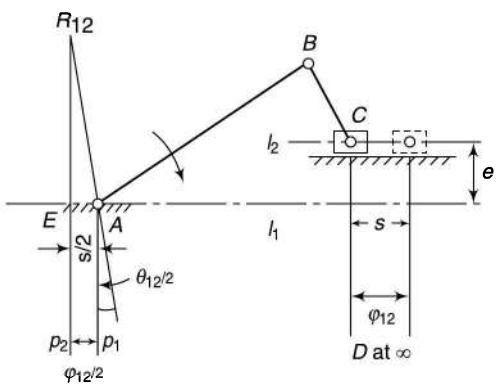

Fig. 5.3

Thus, the procedure to locate the relative pole of a slider-crank mechanism will be as under:

1. Draw two parallel lines l_1 and l_2 at a distance *e* apart (if there is an eccentricity).
2. Select a line segment *AE* of length *s/2* on the line l_1 such that *E* is measured in a direction opposite to the motion of the slider.
3. At *A* and *E*, draw perpendicular lines p_1 and p_2 respectively to the line l_1
4. Make the angle $\theta_{12}/2$ at the point *A* with the line p_1 in a direction opposite to the rotation of the input link.

The intersection of this line with the line p_2 locates the relative pole R_{12}.

5.3 FUNCTION GENERATION BY RELATIVE POLE METHOD

The problems of function generation for two and three accuracy positions are easily solved by the relative pole method as discussed below:

(a) Four-link Mechanisms

Two-position synthesis Let for a four-link mechanism, the positions of the pivots A and D along with the angular displacements θ_{12} (angle between θ_1 and θ_2) and φ_{12} (angle between φ_1 and φ_2) of the driver and the driven links respectively be known.

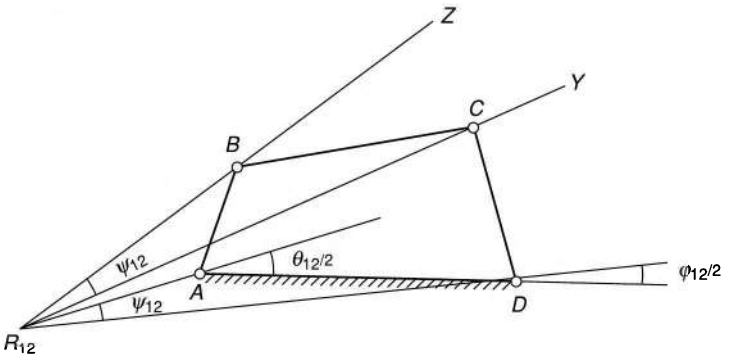

Fig. 5.4

To design the mechanism (Fig. 5.4), first locate the relative pole R_{12} by the procedure given in Sec. 5.2.

Now, angle subtended by the coupler BC at R_{12}

$$= \text{angle subtended by the fixed pivots } A \text{ and } D \text{ at } R_{12}$$

$$= \frac{1}{2}\angle\theta_{12} - \frac{1}{2}\angle\varphi_{12} \qquad \text{(assuming } DC > AB\text{)}$$

$$= \angle\psi_{12}$$

Adopt any of the following alternatives to design the required mechanism:

1. At point R_{12}, construct an angle ψ_{12} at an arbitrary position. Join any two points on the two arms of the angle to obtain the coupler link BC of the mechanism. Join AB and DC to have the driver and the driven links respectively.
2. Locate the point C arbitrary so that DC is the output link. Construct an angle $CR_{12}Z = \psi_{12}$. Take any point B on $R_{12}Z$. Join AB and BC.
3. Instead of locating the point C as above, locate the point B arbitrary so that AB is the input link. Construct an angle $BR_{12}Y = \psi_{12}$. Take any point C on $R_{12}Y$. Join BC and DC.

Then $ABCD$ is the required four-link mechanism.

Three-position synthesis If instead of one angular displacement of the input and of the output link, two displacements of the input (θ_{12} and θ_{13}) and two of the output (φ_{12} and φ_{13}) are known, find R_{12} and R_{13} as shown in Fig. 5.5.

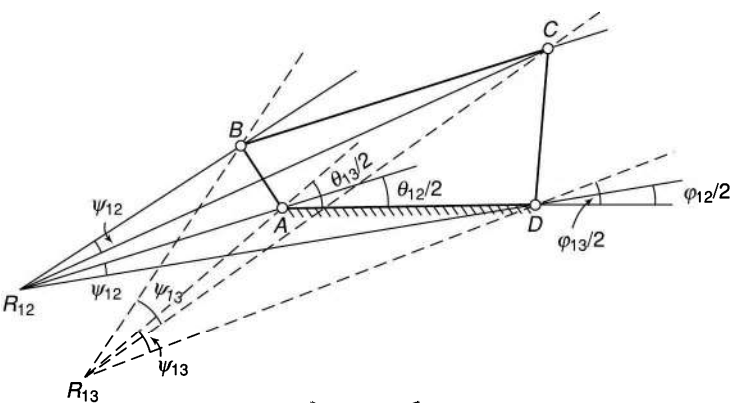

Fig. 5.5

Let ψ_{12} and ψ_{13} = angles made by the fixed link at R_{12} and R_{13} respectively.

Construct the angles ψ_{12} and ψ_{13} at the points R_{12} and R_{13} respectively in arbitrary positions such that the arms of the angles intersect at B and C in convenient positions.

(b) Slider-crank Mechanism

Two-position synthesis For a slider-crank mechanism,

let θ_{12} = angular displacement of input link ($\angle$between θ_1 and θ_2)

s_{12} = linear displacement of the slider

e = eccentricity

Draw two parallel lines l_1 and l_2 at a distance e apart. Locate the relative pole R_{12} as shown in Fig. 5.6. At the point R_{12}, construct an angle equal to $\theta_{12}/2$ ($\because \varphi_{12} \approx 0, \therefore \psi \approx \theta_{12}/2$) in an arbitrary (but convenient) position. The intersection of an arm of this angle with the line l_2 provides the position of the slider. Select an arbitrary point B on the other arm of the angle so that ABC is the required slider-crank mechanism.

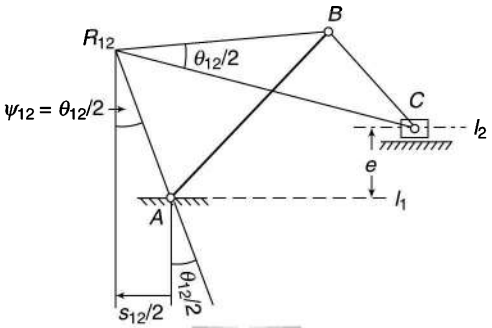

Fig. 5.6

Three-position synthesis If two displacements of the input link (θ_{12} and θ_{13}) and the slider (s_{12} and s_{13}) are known, find R_{12} and R_{13} as shown in Fig. 5.7.

Now, $\dfrac{\theta_{12}}{2}$ = angle made by the fixed link at R_{12}

$\dfrac{\theta_{13}}{2}$ = angle made by the fixed link at R_{13}

Therefore, construct angle $\theta_{12}/2$ at R_{12} in an arbitrary position locating the point C. Draw the angle $\theta_{13}/2$ at R_{13} with an arm along $R_{13}C$. Intersection of the two arms (not through C) of the two angles locates the point B.

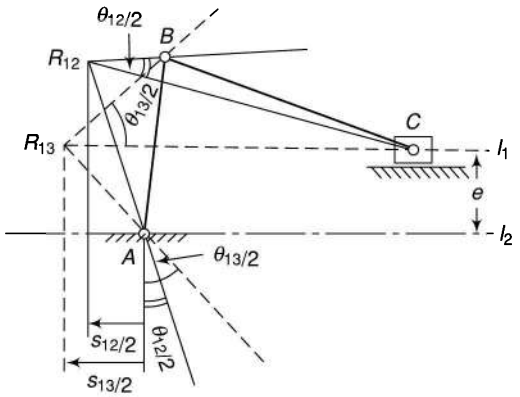

Fig. 5.7

Example 5.1 *Design a four-link mechanism to coordinate three positions of the input and the output links for the following angular displacements:*

$\theta_{12} = 60°$ $\quad \varphi_{12} = 30°$

$\theta_{13} = 90°$ $\quad \varphi_{13} = 50°$

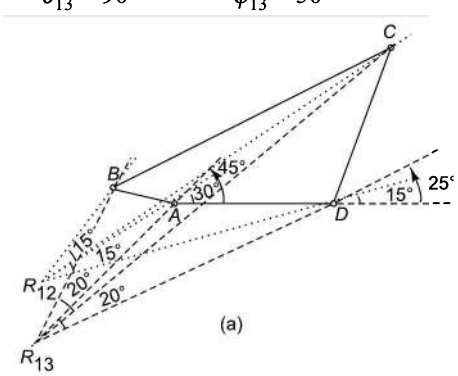

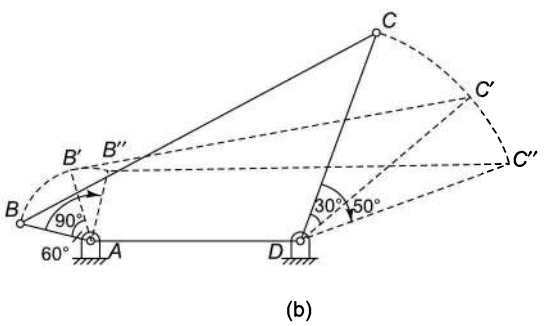

Fig. 5.8

Solution The procedure is as follows:

1. Locate suitable positions of the ground pivots A and D.
2. Locate the relative pole R_{12} by rotating AD about A through an angle 30° (=$\theta_{12}/2$)

[Fig. 5.8(a)] and about D through an angle 15° (= $\varphi_{12}/2$) taking both counter-clockwise. The point of intersection of the two positions of AD after rotation about A and D is the relative pole R_{12}. Similarly, locate R_{13}.

3. At point R_{12}, construct an angle of 15° (= $\theta_{12}/2 - \varphi_{12}/2$) at an arbitrary suitable position. At the point R_{13}, construct an angle of 20° (= $\theta_{13}/2 - \varphi_{13}/2$) in such a way that the intersection of its two arms with that of the arms of the previous angle locates points B and C at suitable positions.
4. Join AB, BC and CD.

Then, $ABCD$ is the required four-link mechanism. Figure 5.8b shows the same in three positions.

Example 5.2 *Design a slider-crank mechanism to coordinate three positions of the input link and the slider for the following angular and linear displacements of the input link and the slider respectively:*

$\theta_{12} = 40°$ $\quad s_{12} = 180$ *mm*

$\theta_{13} = 120°$ $\quad s_{13} = 300$ *mm*

Take eccentricity of the slider as 20 mm.

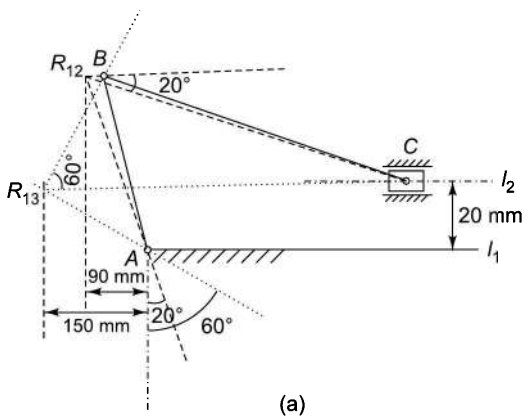

(a)

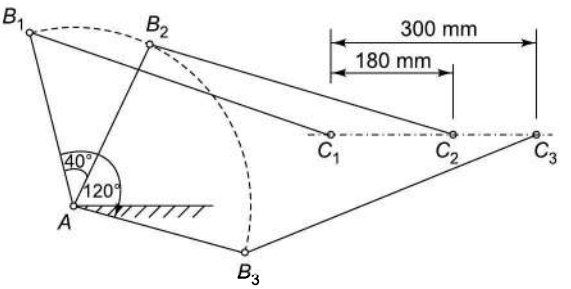

(b)

Fig. 5.9

Solution The required slider-crank mechanism can be designed as follows:

1. Draw two parallel lines l_1 and l_2 20 mm apart from each other [Fig. 5.9(a)].
2. Take an arbitrary point A on the line l_1 for the fixed ground pivot.
3. Locate the relative pole R_{12} by rotating a vertical line through A about A through an angle of 20° (=$\theta_{12}/2$) counter-clockwise and drawing a vertical line at 90 mm (= $s_{12}/2$) to the left of A. Similarly, locate the relative pole R_{13} by rotating vertical line through A about A through an angle 60° (=$\theta_{13}/2$) counter-clockwise and drawing a vertical line at 150 mm (= $s_{13}/2$) to the left of A.
4. At point R_{12}, construct an angle of 20° (= $\theta_{12}/2$) and at point R_{13}, construct an angle of 60° (= $\theta_{13}/2$) in such a way that the intersection of their arms locate the points B and C (on l_2) at suitable positions.
5. Join AB and BC.

Then, ABC is the required slider-crank mechanism. Figure 5.9(b) shows the same in three positions.

5.4 INVERSION METHOD

Basically, the relative pole method is derived from the kinematic inversion principle. But there is no visible inversion of the planes during the solution of the problems. In the inversion method, there is direct use of the concept of inversion.

A four-link mechanism $ABCD$ is shown in two positions AB_1C_1D and AB_2C_2D in Fig. 5.10. The input and the output links AB and DC are moved through angles θ_{12} and φ_{12} respectively in the clockwise direction.

Rotate AD through θ_{12} in a direction opposite to the rotation of AB and get the inversion $AB_1C_2'\ D'$. It can be observed that the configuration AB_2C_2D has been rotated about A through an angle θ_{12} in the counter-clockwise direction to obtain the figure $AB_1C_2'D'$. Make the following observations:

1. Point C_2 is rotated through an angle θ_{12} in the counter-clockwise direction with the centre at A.
2. $C_1C'_2$ lies on a curve with the centre of rotation at B_1. Therefore, B_1 lies on the midnormal of $C_1C'_2$.

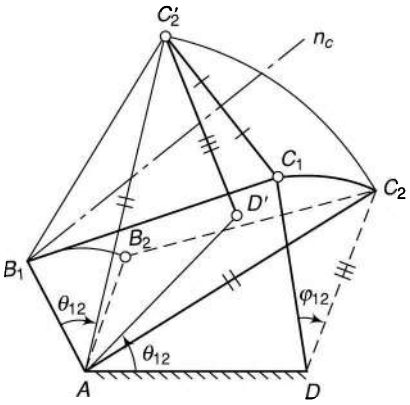

Fig. 5.10

5.5 FUNCTION GENERATION BY INVERSION METHOD

The problems of function generation for two, three and four accuracy positions can be solved by the inversion method as follows:

(a) Four-Link Mechanism

Two-position synthesis Let the distance between the fixed pivots A and D, and the angles θ_{12} and φ_{12} be known. To design the mechanism, proceed as follows:

1. Draw a line segment AD of length equal to the distance between the fixed pivots (Fig. 5.11).
2. At point D, construct an angle $C_1DC_2 = \varphi_{12}$ (clockwise) at an arbitrary position, selecting a suitable output crank length $DC_1 = DC_2$.
3. Rotate point C_2 in the counter-clockwise direction through an angle θ_{12} with A as centre and obtain the point C_2'.
4. Join C_1C_2' and draw its midnormal. Select a suitable point B_1 on it.
   AB_1C_1D is the required four-link mechanism in which B_1C_1 is the coupler.

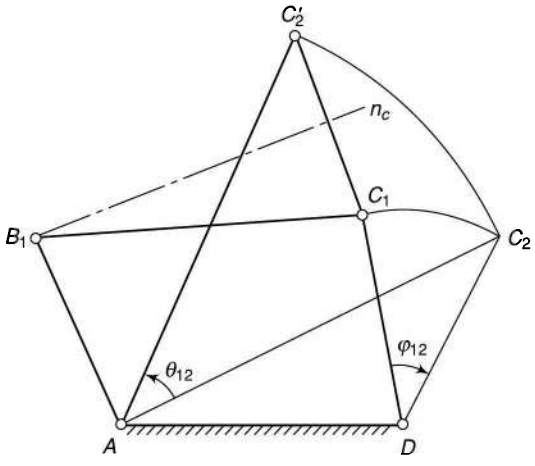

Fig. 5.11

Three-position synthesis If two angular displacements of the input link (θ_{12} and θ_{13}) and two of the output link (φ_{12} and φ_{13}) are known, proceed as below:

1. Draw a line segment AD of length equal to the distance between the fixed pivots (Fig. 5.12).
2. Choose some suitable length of the output link DC. Draw it at some suitable angle with the fixed link AD and locate its three positions DC_1, DC_2 and DC_3 as its angular displacements are known.
3. Find the points C'_2 and C'_3 after rotating AC_2 and AC_3 about A through angles θ_{12} and θ_{13} respectively in the counter-clockwise direction.
4. Intersection of the midnormals of $C_1\,C'_2$ and $C_1\,C'_3$ locates the point B_1. Then, AB_1C_1D is the required four-link mechanism.

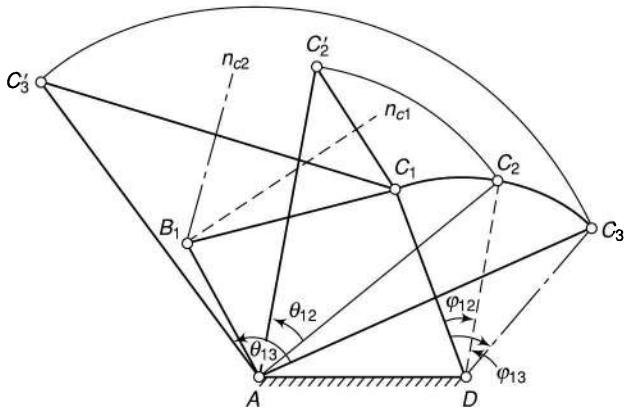

Fig. 5.12

The mechanism could also have been obtained by drawing the input link AB in three positions and rotating DB_2 and DB_3 through angles φ_{12} and φ_{13} respectively in the counter-clockwise direction with D as centre.

Four-position synthesis If a four-link mechanism is to be designed for four precision positions of the input and four positions of the output link, it can be designed by *point-position reduction* method. In this method, the point B_1 is chosen at the relative pole R_{12} with an assumed position of fixed link AD. The corresponding positions of B_2, B_3 and B_4 are easily located establishing the input link in four positions. Then by using the inversion method, the mechanism can be designed. The method is given below in brief:

1. Draw a line segment AD of suitable length to be the distance between the fixed pivots (Fig. 5.13).
2. Locate the position of the relative pole by rotating AD about A through angle $\theta_{12}/2$ and about D through an angle $\phi_{12}/2$ both in counter-clockwise direction. Take this as the point B_1.
3. Draw the input link AB in four positions AB_1, AB_2, AB_3 and AB_4 as its angular displacements are known.
4. Find the points B'_2, B'_3 and B'_4 after rotating DB_2, DB_3 and DB_4 about D through angles ϕ_{12}, ϕ_{13} and ϕ_{14} respectively in the counter-clockwise direction. It may be noted that the location of B'_2 is situated at B_1.
5. Intersection of the midnormals of $B'_2B'_3$ and $B'_3B'_4$ locates the point C.

Then AB_1CD is the required mechanism.

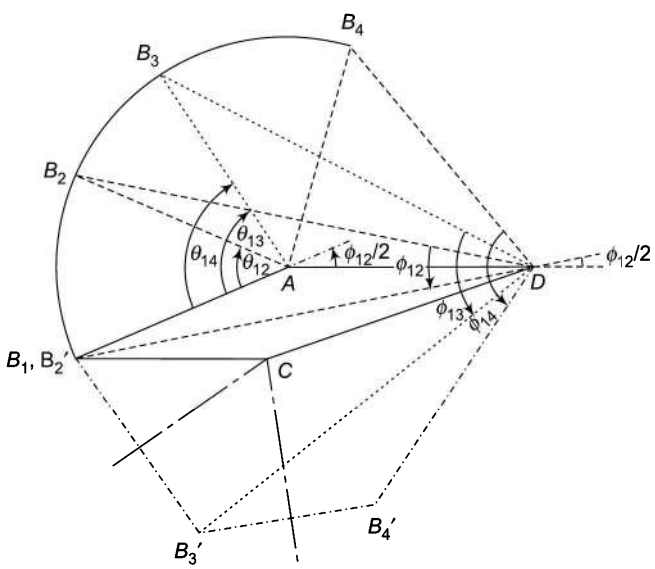

Fig. 5.13

(b) Slider-Crank Mechanism

Two-position synthesis If the angular displacement of the input link θ_{12} and the linear displacement of the slider s_{12} along with the eccentricity e are known, the required slider-crank mechanism is obtained as follows:

1. Draw two parallel lines l_1 and l_2 at a distance e apart (Fig. 5.14).
2. Take an arbitrary point A on the line l_1 for the fixed pivot and two points C_1 and C_2 on the line l_2, a distance s_{12} apart for the initial and the final positions of the slider.
3. Rotate the point C_2 about A through an angle θ_{12} in the counter-clockwise direction to obtain the point C'_2.
4. Join $C_1C'_2$ and draw its midnormal n_c. Take an arbitrary but convenient point B on it.

ABC_1 is the required slider-crank mechanism.

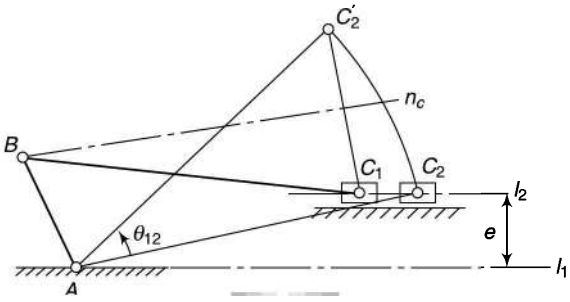

Fig. 5.14

Three-position synthesis For three positions of the input link and three positions of the slider, find C'_2 and C'_3 as usual. Then midnormal of $C_1C'_2$ and $C_1C'_3$ intersect at the point B (Fig.5.15).

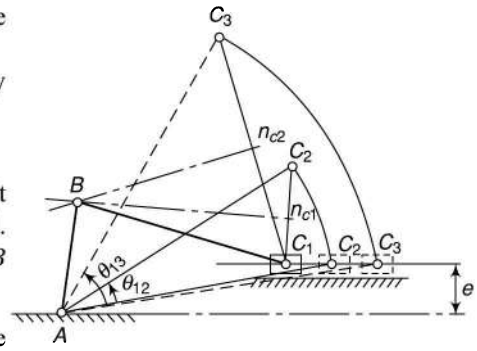

Fig. 5.15

Four-position synthesis A four-position synthesis can be done in the same way as in case of a four-link mechanism.

Example 5.3 *Design a four-link mechanism to coordinate three positions of the input and of the output links for the following angular displacements by inversion method:*

$\theta_{12} = 35°$ $\varphi_{12} = 50°$

$\theta_{13} = 80°$ $\varphi_{13} = 80°$

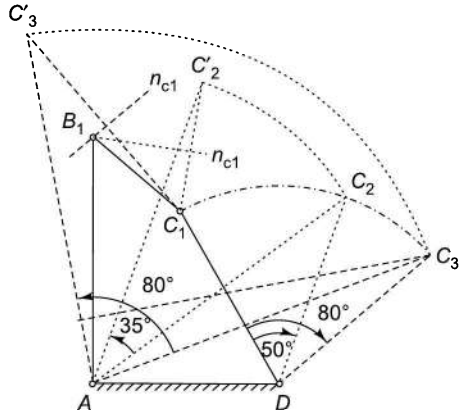

(a)

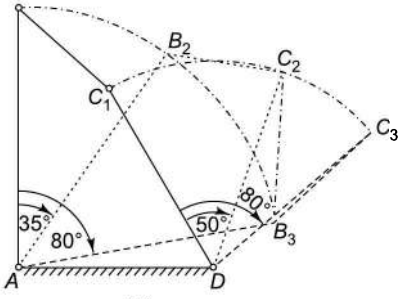

(b)

Fig. 5.16

Solution For the given two angular displacements of the input and the output links, proceed as given below:

1. Draw a line segment AD of suitable length to represent the fixed link [Fig. 5.16(a)].
2. Choose a suitable length of the output link DC and a suitable location of C_1. Then locate the positions of C_2 and C_3 by drawing the output link DC in three positions DC_1,

DC_2 and DC_3 as its angular displacements are known.

3. Find the points C'_2 and C'_3 after rotating AC_2 and AC_3 about A through angles θ_{12} and θ_{13} respectively in the counter-clockwise direction.
4. Intersection of the midnormals of $C_1\,C'_2$ and $C_1\,C'_3$ locates the point B_1.

Then AB_1C_1D is the required four-link mechanism. Figure 5.16(b) shows the mechanism in the required three positions. The mechanism could also have been obtained by drawing the input link AB in three positions as stated earlier.

Example 5.4 *Design a slider-crank mechanism to coordinate three positions of the input and of the slider for the following data by inversion method:*

$\theta_{12} = 30°$ $\quad s_{12} = 40$ *mm*

$\theta_{13} = 60°$ $\quad s_{13} = 96$ *mm*

Eccentricity = 20 *mm*

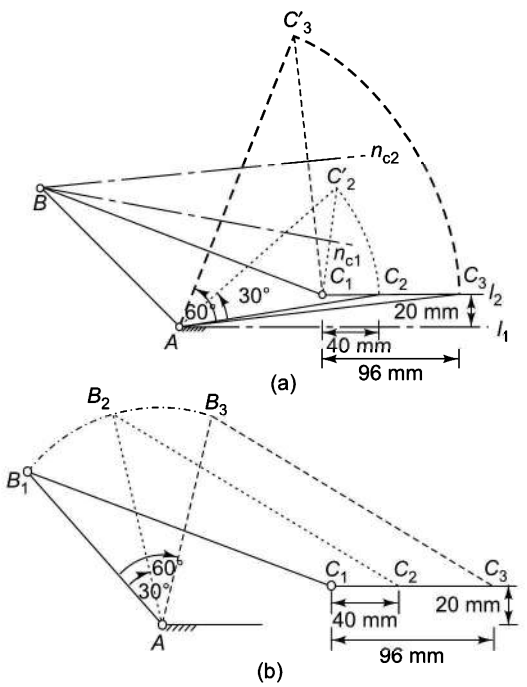

Fig. 5.17

Solution For the given two angular displacements of the input link and the two linear displacements of the slider along with the eccentricity e, the required slider-crank mechanism is obtained as follows:

1. Draw two parallel lines l_1 and l_2 at a distance of 20 mm apart [Fig. 5.17(a)].
2. Take an arbitrary point A on the line l_1 for the fixed pivot and three points C_1, C_2 and C_3 on the line l_2, at distances 40 mm and 96 mm apart for the initial and subsequent positions of the slider.
3. Rotate the point C_2 about A through an angle 30° in the counter-clockwise direction to obtain the point C'_2. Similarly, rotate the point C_3 about A through an angle 60° to obtain the point C'_3
4. Join $C_1C'_2$ and $C_1C'_3$ and draw their midnormals to intersect at point B.

Then ABC_1 is the required slider-crank mechanism. Figure 5.17(b) shows the mechanism in the required three positions.

Example 5.5 *Design a four-link mechanism to coordinate four positions of the input and the output links for the following angular displacements of the input link and the output link respectively:*

$\theta_{12} = 50°$ $\quad \varphi_{12} = 30°$

$\theta_{13} = 80°$ $\quad \varphi_{13} = 80°$

$\theta_{13} = 100°$ $\quad \varphi_{13} = 120°$

Solution Make the following construction:

1. Draw a line segment AD of suitable length to be the distance between the fixed pivots [Fig. 5.18(a)].
2. Locate the position of the relative pole by rotating AD about A through angle 25° ($= \theta_{12}/2$) and about D through an angle 15° ($= \varphi_{12}/2$) both in counter-clockwise direction. Take this as point B_1.

3. Draw the input link AB in four positions AB_1, AB_2, AB_3 and AB_4 as its angular displacements are known.

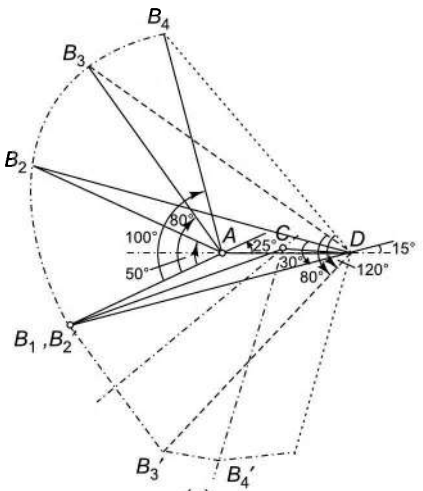

(a)

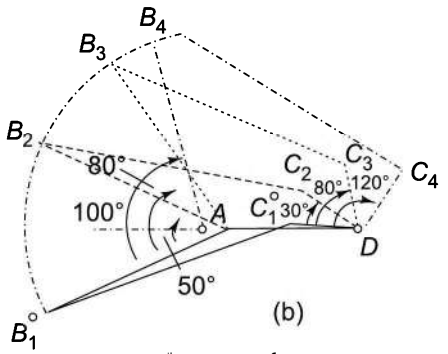

(b)

Fig. 5.18

4. Locate the points B'_2, B'_3 and B'_4 by rotating DB_2, DB_3 and DB_4 about D through angles φ_{12}, φ_{13} and φ_{12} respectively in the counter-clockwise direction such that the location of B'_2 is at B_1.
5. Intersection of the midnormals of $B'_2B'_3$ and $B'_3B'_4$ locates the point C.

Then AB_1CD is the required mechanism. Figure 5.18(b) shows the mechanism in the required four positions.

5.6 PATH GENERATION

The problem may be of designing the mechanism without or with prescribed timing, i.e., the guidance of the point on the coupler may or may not be coordinated with the movement of the input link. To design such a mechanism, the method of inversion of mechanisms is used by fixing the coupler and releasing the fixed link. To understand the inversion method, consider a four-link mechanism as shown in Fig. 5.19(a) in two positions $A_1B_1C_1D_1$ and $A_1B_2C_2D_1$. E is an offset point on the coupler which assumes the location E_2 in the second position. In Fig. 5.19(b), the inversion of the mechanism is shown by fixing the coupler B_1C_1 and releasing the fixed link so that the quadrilateral $A_1B_2C_2D$ of figure (a) in exactly the same as the quadrilateral $A_2B_1C_1D_2$ of figure (b). It can be done by taking $\angle A_2\ B_1C_1 = \angle A_1B_2C_2$. Now if triangles $B_2E_2D_1$ and $B_1E_1D_2$ are marked in the two figures, they must be congruent. It can be observed that the point C_1 is the centre of curvature of the arc passing through D_1 and D_2 and thus lies on the right bisector of D_1D_2.

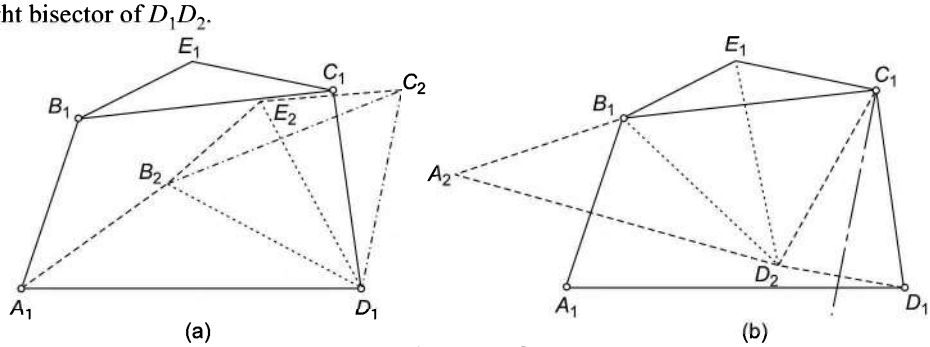

(a) (b)

Fig. 5.19

(a) *Without prescribed timing* In this case, three positions of the coupler point (E_1, E_2, E_3) are known. The procedure of designing such a mechanism is as follows:

1. Select suitable locations of A_1 and D_1 of the fixed link with respect to the positions of the coupler point E_1, E_2 and E_3 (Fig. 5.20).
2. Choose a suitable length of the input link A_1B_1. Mark the first position of B_1 at a suitable position. As the lengths of the links A_1B_1 and B_1E_1 are to be same in all positions, locate the positions of B_2 and B_3. Thus, the input link in three positions AB_1, AB_2 and AB_3 is established. Now, the task of obtaining the point C_1 remains which is done by the inversion method as discussed above by fixing the coupler in the first position.

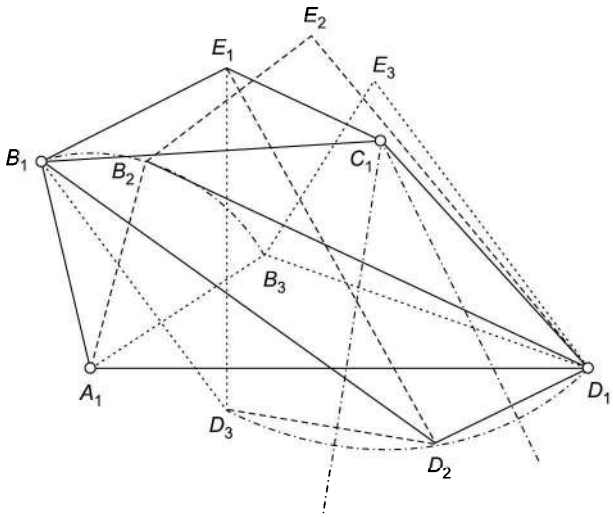

Fig. 5.20

3. Construct $\Delta E_2B_2D_1 \equiv \Delta E_1B_1D_2$ and $\Delta E_3B_3D_1 \equiv \Delta E_1B_1D_3$.
4. The centre of the arc through D_1, D_2 and D_3 is the crank pin C_1. Draw midnormals of D_1D_2 and D_2D_3. The intersection of the two locations is the point C_1.
   Thus, $A_1B_1C_1D_1$ is the required four-link mechanism with the coupler point E_1.

(b) *With prescribed timing* For two angular displacements θ_{12} and θ_{13} and three positions of the coupler point (E_1, E_2, E_3), the choice of the input link is not arbitrary. To design such a mechanism, proceed as follows (Fig. 5.21).

1. Select suitable locations of A_1 and D_1 of the fixed link with respect to the positions of the coupler point (E_1, E_2, E_3).
2. Rotate AE_2 through an angle θ_{12} in the counter-clockwise direction with A as centre and obtain the point E'_2. Similarly, rotate AE_3 through an angle θ_{13} in the counter-clockwise direction with centre A and obtain the point E'_3.
3. The centre of the arc through E_1, E'_2 and E'_3 is the crank pin B_1. To obtain it, draw midnormals of $E_1E'_2$ and $E_1E'_3$, the intersection of these provides the location of B_1.
4. The rest of the procedure is as discussed above for the case of without prescribed timing, i.e., locating the positions of B_2 and B_3 and then constructing $\Delta E_2B_2D_1 \equiv \Delta E_1B_1D_2$ and $\Delta E_3B_3D_1 \equiv \Delta E_1B_1D_3$.

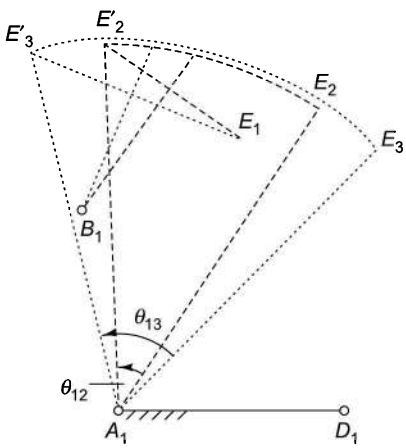

Fig. 5.21

Example 5.6 *Design a four-link mechanism to coordinate the following three positions of the coupler point. The positions are given with respect to coordinate axes:*

$r_1 = 55$ *mm* $\quad \alpha_1 = 75°$

$r_2 = 70$ *mm* $\quad \alpha_2 = 50°$

$r_3 = 75$ *mm* $\quad \alpha_3 = 40°$

The angular displacements of the input link are to be $\theta_{12} = 30°$ *and* $\theta_{13} = 70°$.

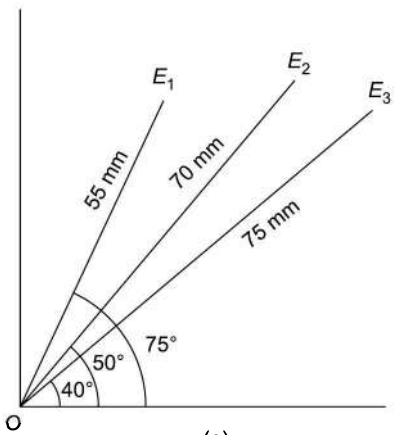

(a)

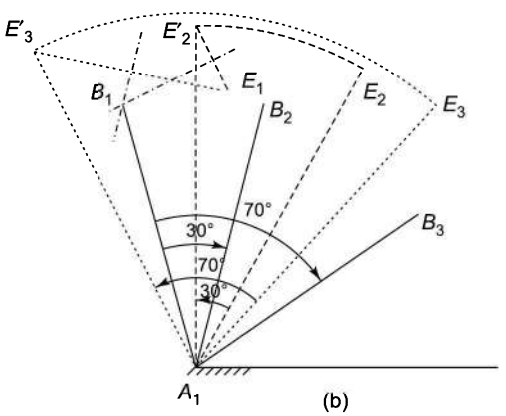

(b)

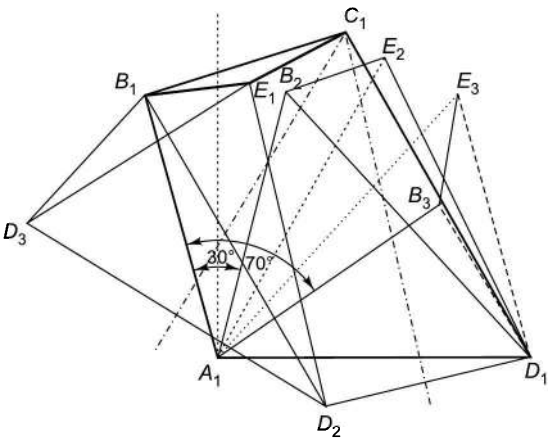

(c)

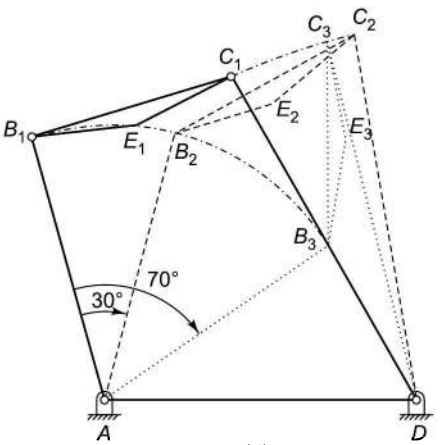

(d)

Fig. 5.22

Solution It is the case of path generation with prescribed timing. The procedure is given below:

1. Locate the three coupler points E_1, E_2 and E_3 as shown in Fig. 5.22(a).
2. Select a suitable location of the pivot A_1 of the fixed link with respect to the positions of the coupler points [Fig. 5.22(b)].
3. Rotate A_1E_2 through an angle 30° ($=\theta_{12}$) in the counter-clockwise direction with A_1 as centre and obtain the point E'_2. Similarly, rotate AE_3 through an angle 70° ($=\theta_{13}$) in the counter-clockwise direction with centre A and obtain the point E'_3.

4. Draw midnormals of $E_1E'_2$ and $E_1E'_3$, the intersection locates the point B_1.
5. Draw the input link in three positions AB_1, AB_2 and AB_3.
6. Select suitable location of the pivot D_1 of the fixed link. Construct $\Delta E_2B_2D_1 \equiv \Delta E_1B_1D_2$ and $\Delta E_3B_3D_1 \equiv \Delta E_1B_1D_3$.
7. Draw midnormals of D_1D_2 and D_2D_3. The intersection of the two locates the point C_1.

Thus, $A_1B_1C_1D_1$ is the required four-link mechanism with the coupler point E_1. Figure 5.22(d) shows the required mechanism in three positions.

5.7 MOTION GENERATION (RIGID-BODY GUIDANCE)

Let a rigid body be guided through three prescribed positions. It is required to design a four-link mechanism of which this rigid body will be a coupler. The rigid body is shown in Fig. 5.23 in three given positions. To find the lengths of the four links of the mechanism, proceed as follows:

1. Take any two arbitrary suitable points B and C on the rigid body and locate these on the body in three positions. It is assumed that the point B_1, B_2, B_3 and E_1, E_2 and E_3 are non-collinear.
2. Find the centre A of the circle passing through B_1, B_2, and B_3. Similarly, let the centre of the circle passing through C_1, C_2 and C_3 be D.
3. Join AB_1, B_1C_1 and C_1D.

Then, AB_1C_1D is the required mechanism which takes the coupler B_1C_1 through B_2C_2 and B_3C_3.

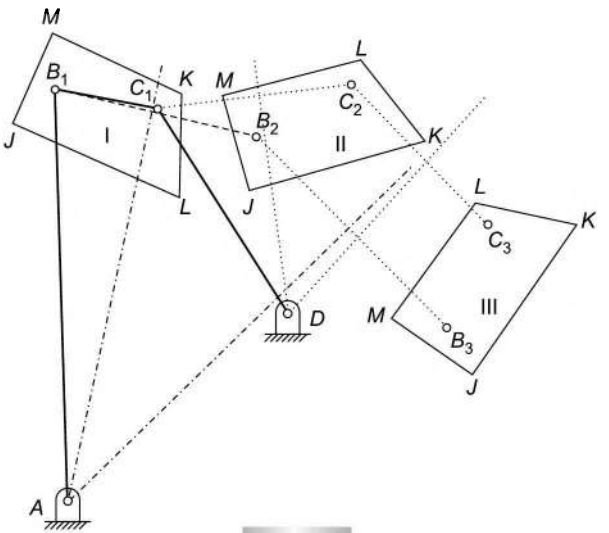

Fig. 5.23

In the above case of motion generation, the choice of the ground pivots is not with the designer. Many times, it becomes necessary to fix the locations of these pivots beforehand due to constraint of space. Such type of problem can also be solved by the inversion method as discussed in Section 5.6. In such cases, proceed as follows:

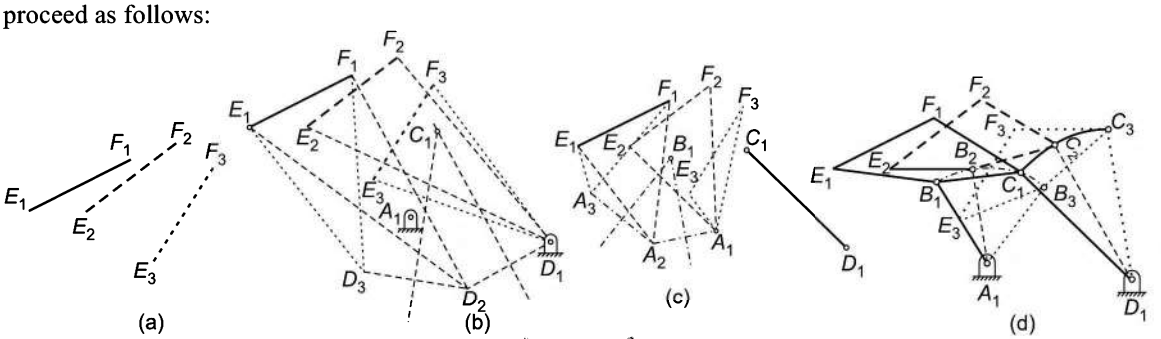

Fig. 5.24

1. Take any two arbitrary points E and F on the rigid body and locate these on the body in three positions [Fig. 5.24(a)].
2. Let A_1 and D_1 be the locations of the ground pivots [Fig. 5.24(b)].
3. Construct $\Delta E_2F_2D_1 \equiv \Delta E_1F_1D_2$ and $\Delta E_3F_3D_1 \equiv \Delta E_1F_1D_3$.
4. The centre of the arc through D_1, D_2 and D_3 is the crank pin C_1. To locate it, draw midnormals of D_1D_2 and D_2D_3. The intersection of the two is the pivot point C_1 on the rigid body or the coupler.
5. Construct $\Delta E_2F_2A_1 \equiv \Delta E_1F_1A_2$ and $\Delta E_3F_3A_1 \equiv \Delta E_1F_1A_3$ [Fig. 5.24(c)].
6. The centre of the arc through A_1, A_2 and A_3 is the crank pin B_1. Draw midnormals of A_1A_2 and A_2A_3. The intersection of the two locates the pivot point A_1 on the rigid body or coupler.

Then $A_1B_1C_1D_1$ is the required mechanism which takes the coupler $B_1E_1F_1C_1$ through $B_2E_2F_2C_2$ and $B_3E_3F_3C_3$ [Fig. 5.24(d)].

PART B: COMPUTER-AIDED SYNTHESIS OF MECHANISMS

5.8 FUNCTION GENERATION

A four-link mechanism shown in Fig. 5.25 is in equilibrium. Let a, b, c and d be the magnitudes of the links AB, BC, CD and DA respectively. θ, β and φ are the angles of AB, BC and DC respectively with the X-axis (taken along AD). AD is the fixed link. AB and DC are the input and output links respectively of the mechanism.

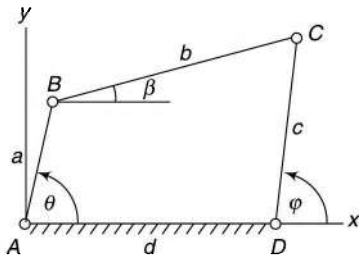

Fig. 5.25

Considering the links to be vectors, displacement along the X-axis

$a \cos \theta + b \cos \beta = d + c \cos \phi$ (The equation is valid for $< \phi$ more than 90° also.)

or $\quad b \cos \beta = c \cos \varphi - a \cos \theta + d$

or $\quad (b \cos \beta)^2 = (c \cos \varphi - a \cos \theta + d)^2$

$$= c^2 \cos^2 \varphi + a^2\cos^2 \theta + d^2 - 2ac \cos \theta \cos \varphi - 2ad \cos \theta + 2cd \cos \varphi \tag{i}$$

Displacement along Y-axis

$a \sin \theta + b \sin \beta = c \sin \phi$

or $\quad b \sin \beta = c \sin \varphi - a \sin \theta$

or $\quad (b \sin \beta)^2 = (c \sin \varphi - a \sin \theta)^2$

$$= c^2 \sin^2 \varphi + a^2 \sin^2 \theta - 2ac \sin \theta \sin \varphi \tag{ii}$$

Adding (i) and (ii),

$$b^2 = c^2 + a^2 + d^2 - 2ac \cos \theta \cos \varphi - 2ad \cos \theta + 2cd \cos \varphi - 2ac \sin \theta \sin \varphi$$

or $\quad 2cd \cos\varphi - 2ad \cos\theta + a^2 - b^2 + c^2 + d^2 = 2ac(\cos\theta \cos \varphi + \sin\theta \sin \varphi)$

Dividing throughout by $2ac$,

$$\frac{d}{a}\cos \varphi - \frac{d}{c}\cos \theta + \frac{a^2 - b^2 + c^2 + d^2}{2ac} = \cos(\theta - \varphi) = \cos(\varphi - \theta)$$

This is known as *Freudenstein's* equation and can be written as,

$$k_1\cos\varphi + k_2 \cos\theta + k_3 = \cos(\theta - \varphi) \tag{5.1}$$

where

$$k_1 = \frac{d}{a}; k_2 = -\frac{d}{c}; \quad \text{and} \quad k_3 = \frac{a^2 - b^2 + c^2 + d^2}{2ac}$$

Let the input and the output are related by some function such as $y = f(x)$ and for the specified positions

$\theta_1, \theta_2, \theta_3$ = three positions of input link (given)

and $\varphi_1, \varphi_2, \varphi_3$ = three positions of output link (given)

It is required to find the values of a, b, c and d to form a four-link mechanism giving the prescribed motions of the input and the output links.

Equation (5.1) can be written as,

$$k_1\cos\varphi_1 + k_2 \cos\theta_1 + k_3 = \cos(\theta_1 - \varphi_1)$$
$$k_1\cos\varphi_2 + k_2 \cos\theta_2 + k_3 = \cos(\theta_2 - \varphi_2)$$
$$k_1\cos\varphi_3 + k_2 \cos\theta_3 + k_3 = \cos(\theta_3 - \varphi_3)$$

k_1, k_2, and k_3 can be evaluated by Gaussian elimination method or by the Cramer's rule.

$$\Delta = \begin{vmatrix} \cos\varphi_1 & \cos\theta_1 & 1 \\ \cos\varphi_2 & \cos\theta_2 & 1 \\ \cos\varphi_3 & \cos\theta_3 & 1 \end{vmatrix}$$

$$\Delta_1 = \begin{vmatrix} \cos(\theta_1 - \varphi_1) & \cos\theta_1 & 1 \\ \cos(\theta_2 - \varphi_2) & \cos\theta_2 & 1 \\ \cos(\theta_3 - \varphi_3) & \cos\theta_3 & 1 \end{vmatrix}$$

$$\Delta_2 = \begin{vmatrix} \cos\varphi_1 & \cos(\theta_1 - \varphi_1) & 1 \\ \cos\varphi_2 & \cos(\theta_2 - \varphi_2) & 1 \\ \cos\varphi_3 & \cos(\theta_3 - \varphi_3) & 1 \end{vmatrix}$$

$$\Delta_3 = \begin{vmatrix} \cos\varphi_1 & \cos\theta_1 & \cos(\theta_1 - \varphi_1) \\ \cos\varphi_2 & \cos\theta_2 & \cos(\theta_2 - \varphi_2) \\ \cos\varphi_3 & \cos\theta_3 & \cos(\theta_3 - \varphi_3) \end{vmatrix}$$

k_1, k_2 and k_3 are given by,

$$k_1 = \frac{\Delta_1}{\Delta}; \qquad k_2 = \frac{\Delta_2}{\Delta}; \qquad k_3 = \frac{\Delta_3}{\Delta}$$

Knowing k_1, k_2 and k_3, the values of a, b, c and d can be computed from the relations

$$k_1 = \frac{d}{a}; \qquad k_2 = -\frac{d}{c}; \qquad k_3 = \frac{a^2 - b^2 + c^2 + d^2}{2ac}$$

Value of either a or d can be assumed to be unity to get the proportionate values of other parameters.

```
#include<stdio.h>
#include<conio.h>
#include<math.h>
void main()
{
      float a,b,c,p1,p2,p3,t1,t2,t3,th2,th3,a1,a2,a3,del,
      rad,ph1,ph2,ph3,del1,del2,del3;
      clrscr();
      printf("enter values of th1,th2,th3,ph1,ph2,ph3;\n");
      scanf("%f %f %f %f %f %f",&th1,&th2,&th3,&ph1,&ph2,&ph3);
```

```
    rad=4*atan(1)/180;
    p1=cos(ph1*rad);
    p2=cos(ph2*rad);
    p3=cos(ph3*rad);
    t1=cos(th1*rad);
    t2=cos(th2*rad);
    t3=cos(th3*rad);
    a1=cos((th1-ph1)*rad);
    a2=cos((th2-ph2)*rad);
    a3=cos((th3-ph3)*rad);
    del=p1*(t2-t3)+t1*(p3-p2)+(p2*t3-p3*t2);
    del1=a1*(t2-t3)+t1*(a3-a2)+(a2*t3-a3*t2);
    del2=p1*(a2-a3)+a1*(p3-p2)+(p2*a3-p3*a2);
    del3=p1*(t2*a3-t3*a2)+t1*(a2*p3-a3*p2)+a1*(p2*t3p3*t2);
    a=del/del1;
    c=-del/del2;
            b=pow((a*a+c*c+1-2*a*c*del3/del),.5);
            printf("   a        b   c        d\n");
    printf("%6.2f  %6.2f  %6.2f  %6.2f  \n",a,b,c,1.00);
    getch();
}
```

Fig. 5.26

Figure 5.26 shows a program in C for solving such a problem. The input variables are

`th1, th2, th3`	Angular displacements of the input link (degrees)
`ph1, ph2, ph3`	Angular displacements of the output link (degrees)

The output variables are

`a, b, c, d`	Ratio of magnitudes of the links *AB*, *BC*, *CD* and *AD* respectively.

Least-square Technique

The above synthesis technique is used to synthesize a mechanism where three finitely separated positions of the input and the output links are known. It is observed that a four-link mechanism can be designed precisely up to five positions of the input and the output links, provided θ and φ are measured from some arbitrary reference. In such cases, the synthesis equations become non-linear and have to be solved by using other means than the Cramer's rule.

It is not possible to design a mechanism for more than five positions of the input and the output links. However, it is possible to design a mechanism which gives least deviation from the specified positions and provides the average performance. To achieve this, an approximated solution of the problem is sought which gives the least error. A method known as the *least-square technique* is useful in synthesizing such a mechanism.

Considering Freudenstein's equation,

$$k_1\cos\varphi_i + k_2\cos\varphi_i + k_3 - \cos(\theta_i - \varphi_i) = 0$$

Owing to error, this equation is not satisfied. Its LHS will have some error value. As this can be positive or negative, its square is taken and summed up for n values of θ and φ and defining.

$$S = \sum_{i=1}^{n} [k_1 \cos\varphi_i + k_2 \cos\theta_i + k_3 - \cos(\theta_i - \varphi_i)]^2$$

Conditions for this to be minimum are,

$$\frac{\partial S}{\partial k_1} = 0, \frac{\partial S}{\partial k_2} = 0 \text{ and } \frac{\partial S}{\partial k_3} = 0$$

i.e.

$$\sum_{i=1}^{n} 2[k_1 \cos\varphi_i + k_2 \cos\theta_i + k_3 - \cos(\theta_i - \varphi_i)]\cos\varphi_i = 0$$

or

$$k_1 \sum k_1 \cos^2 \varphi_i + k_2 \sum \cos\theta_i \cos\varphi_i + k_3 \sum \cos\varphi_i = \sum \cos(\theta_i - \varphi_i)\cos\varphi_i \tag{5.2}$$

Similarly,

$$k_1 \sum \cos\varphi_i \cos\theta_i + k_2 \sum \cos^2 \theta_i + k_3 \sum \cos\theta_i = \sum \cos(\theta_i - \varphi_i)\cos\theta_i \tag{5.3}$$

and

$$k_1 \sum \cos\varphi_i + k_2 \sum \cos\theta_i + k_3 \sum 1 = \sum \cos(\theta_i - \varphi_i) \tag{5.4}$$

These are three simultaneous linear, homogenous equations in three unknowns k_1, k_2, and k_3. These can be solved by using Cramer's rule or other means.

Figure 5.27 shows a program to find the ratio of different links using the least-square technique. The input variables are

```
#include<stdio.h>
#include<conio.h>
#include<math.h>
void main()
{
    int i,k;
    float a,b1,b2,b3,tt,b,c,d,p1,p2,p3,t1,t2,t3,th1,th2,
    th3,a1,a2,a3,del,rad,ph1,ph2,ph3,del1,del2,del3;
    float th[10],ph[10];
    clrscr();

    printf("enter i the number of positions\n");
    scanf("%d",&i);
    printf("enter i values of th[i] and ph[i]\n");
    for(k=0;k<i;k++)      scanf("%f",&th[k]);
    for(k=0;k<i;k++)      scanf("%f",&ph[k]);
    rad=4*atan(1)/180;
      for(k=0;k<i;k++)
      {
          p1=p1+pow(cos(ph[k]*rad),2);
          p2=p2+(cos(th[k]*rad))*(cos(ph[k)*rad));
          p3=p3+cos(ph[k]*rad);
          t1=p2;
          t2=t2+(cos(th[k]*rad)*(cos(th[k]*rad);
          t3=t3+cos(th[k)*rad);
          b1=p3;
          b2=t3;
          b3=i;
          tt=cos((th[k)-ph[k))*rad);
          a1=a1+tt*cos(ph[k]*rad);
```

```
            a2=a2+tt*cos(th[k]*rad);
            a3=a3+tt;
        }
del=pl*(t2*b3-t3*b2)+tl*(b2*p3-b3*p2)+bl*(p2*t3-p3*t2);
dell=al*(t2*b3-t3*b2)+tl*(b2*a3-b3*a2)+bl*(a2*t3-a3*t2);
del2=pl*(a2*b3-a3*b2)+al*(b2*p3-b3*p2)+bl*(p2*a3-p3*a2);
del3=pl*(t2*a3-t3*a2)+tl*(a2*p3-a3*p2)+al*(p2*t3-p3*t2);
a=del/dell;
c=-del/del2;
b=sqrt(a*a+c*c+1-2*a*c*del3/del);
printf("  a        b        c      d\n");
printf("%6.2f  %6.2f  %6.2f  %6.2f  \n",a,b,c,1.00);
getch();
```

Fig. 5.27

`i`	Number of specified positions
`th(j)`	Angular displacements of the input link *AB* for $j = 1$ to i (in degrees)
`ph(j)`	Angular displacements of the output link *DC* for $j = 1$ to i (in degrees)

Example 5.7 *Design a four-link mechanism to coordinate three positions of the input and the output links as follows:*

$\theta_1 = 20°,\ \varphi_1 = 35°$
$\theta_2 = 35°,\ \varphi_2 = 45°$
$\theta_3 = 50°,\ \varphi_3 = 60°$

Solution

$$k_1 \cos 35° + k_2 \cos 20° + k_3 = \cos(20° - 35°)$$
$$k_1 \cos 45° + k_2 \cos 35° + k_3 = \cos(35° - 45°)$$
$$k_1 \cos 60° + k_2 \cos 50° + k_3 = \cos(50° - 60°)$$

Now,

$$\Delta = \begin{vmatrix} \cos 35° & \cos 20° & 1 \\ \cos 45° & \cos 35° & 1 \\ \cos 60° & \cos 50° & 1 \end{vmatrix}$$

$$\Delta_1 = \begin{vmatrix} \cos(20° - 35°) & \cos 20° & 1 \\ \cos(35° - 45°) & \cos 35° & 1 \\ \cos(50° - 60°) & \cos 50° & 1 \end{vmatrix}$$

$$\Delta_2 = \begin{vmatrix} \cos 35° & \cos(20° - 35°) & 1 \\ \cos 45° & \cos(35° - 45°) & 1 \\ \cos 60° & \cos(50° - 60°) & 1 \end{vmatrix}$$

$$\Delta_3 = \begin{vmatrix} \cos 35° & \cos 20° & \cos(20° - 35°) \\ \cos 45° & \cos 35° & \cos(35° - 45°) \\ \cos 60° & \cos 50° & \cos(50° - 60°) \end{vmatrix}$$

$$\Delta = \cos 35°(\cos 35° - \cos 50°) + \cos 20°(\cos 60° - \cos 45°) + (\cos 45° \times \cos 50° - \cos 60° \times \cos 35°)$$
$$= -0.005\,204$$

Similarly, $\Delta_1 = -0.003\,33$
$\Delta_2 = 0.003\,910\,6$
$\Delta_3 = -0.005\,973\,5$

Assuming $d = 1$,

$$k_1 = \frac{\Delta_1}{\Delta} = \frac{-0.003\,33}{-0.005\,204} = \frac{1}{a} \text{ or } a = 1.56$$

$$k_2 = \frac{\Delta_1}{\Delta} = \frac{0.003\,910\,6}{-0.005\,204} = -\frac{1}{c} \text{ or } c = 1.33$$

$$k_3 = \frac{\Delta_1}{\Delta} = \frac{-0.005\,973\,5}{-0.005\,204} = \frac{1.56^2 - b^2 + 1.33^2 + 1^2}{2 \times 1.56 \times 1.33}$$
or $b = 0.66$

Thus, *a, b, c* and *d* are 1.56, 0.66, 1.33 and 1.00 respectively.

The input and the output using the program of Fig. 5.26 have been shown in Fig. 5.28.

```
Enter values of th1, th2, th3, ph1, ph2, ph3;
20  35  50  35  45  60
```

a	b	c	d
1.56	0.66	1.33	1.00

Fig. 5.28

The mechanism is shown in Fig. 5.29.

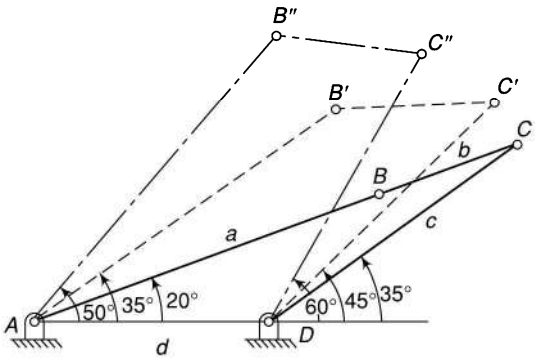

Fig. 5.29

Example 5.8 *Design a four-link mechanism when the motions of the input and the output links are governed by a function $y = x^2$ and x varies from 0 to 2 with an interval of 1. Assume θ to vary from 50° to 150° and ϕ from 80° to 160°.*

Solution The angular displacement of the input link is governed by x whereas that of the output link, by y.

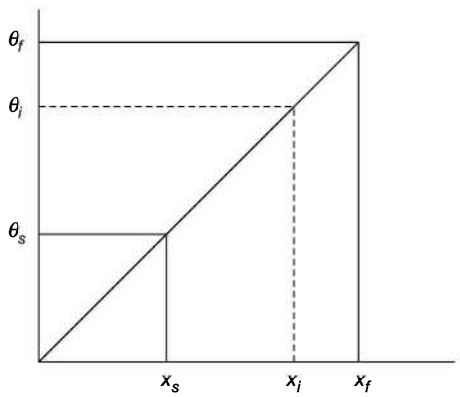

Fig. 5.30

Let subscripts s, f and i indicate the start, final and any value in the range.

Range of $x = x_f - x_s = 2 - 0 = 2$ and thus

$$x_1 = 0; \quad x_2 = 1; \quad x_3 = 2$$

The corresponding values of y are according to function, $y = x^2$

Range of $y = y_f - y_s = 4 - 0 = 4$ and ;

$$y_1 = 0; \quad y_2 = 1; \quad y_3 = 4$$

Range of $\theta = \theta_f - \theta_s = 150° - 50° = 100°$

Range of $\phi = \phi_f - \phi_s = 160° - 80° = 80°$

Refer Fig. 5.30 which indicates a linear relationship between x and θ. Thus

$$\frac{\theta_i - \theta_s}{\theta_f - \theta_s} = \frac{x_i - x_s}{x_f - x_s}$$

or

$$\theta_i = \theta_s + \frac{\theta_f - \theta_s}{x_f - x_s}(x_i - x_s) = \theta_s + \frac{\Delta\theta}{\Delta x}(x_i - x_s);$$

Thus, $\theta_1 = 50° + \frac{100°}{2} \times 0 = 50°$;

$$\theta_2 = 50° + \frac{100°}{2} \times 1 = 100°;$$

$$\theta_3 = 50° + \frac{100°}{2} \times 2 = 150°$$

Similarly,

$$\varphi_i = \varphi_s + \frac{\varphi_f - \varphi_s}{y_f - y_s}(y_i - y_s) = \varphi_s + \frac{\Delta\varphi}{\Delta y}(y_i - y_s);$$

or $\varphi_1 = 80° + \frac{80°}{4} \times 0 = 80°$;

$$\varphi_2 = 80° + \frac{80°}{4} \times 1 = 100°;$$

$$\varphi_3 = 80° + \frac{80°}{4} \times 4 = 160°$$

This can be written in a tabular form:

Position	x	y	θ	φ
1	0	0	50°	80°
2	1	1	100°	100°
3	2	4	150°	160°

Thus, we have the following equations,

$$k_1 \cos 80° + k_2 \cos 50° + k_3 = \cos 30°$$
$$k_1 \cos 100° + k_2 \cos 100° + k_3 = \cos 0°$$

$k_1 \cos 160° + k_2 \cos 150° + k_3 = \cos 10°$

Using Cramer's rule,

$\Delta = -0.3850$

$\Delta_1 = -0.1052 \quad k_1 = 0.273 = \dfrac{d}{a}$

$\Delta_2 = 0.1079 \quad k_2 = -0.280 = -\dfrac{d}{c}$

$\Delta_3 = 0.3844 \quad k_3 = 0.988 = \dfrac{a^2 - b^2 + c^2 + d^2}{2ac}$

which gives

$a = 3.66$ units

$b = 1.02$ units

$c = 3.57$ units

and $d = 1$ unit

Figure 5.31 shows the required mechanism.

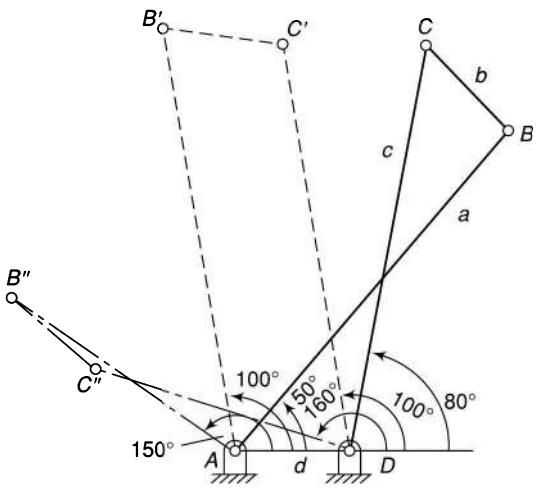

Fig. 5.31

Example 5.9 *Design a four-link mechanism when the motions of the input and the output links are governed by a function $y = 2\log_{10} x$ and x varies from 2 to 4 with an interval of 1. Assume θ to vary from 30° to 70° and ϕ from 40° to 100°.*

Solution Let subscripts s, f and i indicate the start, final and any value in the range.

Range of $x = x_f - x_s = 4 - 2 = 2$ and thus

$x_1 = 2; \quad x_2 = 3; \quad x_3 = 4$

The corresponding values of y are according to function, $y = 2\log_{10} x$

Range of $y = y_f - y_s = (2\log_{10}4) - (2\log_{10}2) = 1.204 - 0.602 = 0.602$

and $y_1 = 0.602; \quad y_2 = 2\log_{10} 3 = 0.954; \quad y_3 = 1.204$;

Range of $\theta = \theta_f - \theta_s = 70° - 30° = 40°$

Range of $\phi = \phi_f - \phi_s = 100° - 40° = 60°$

As $\theta_1 = \theta_s = 30°$ and $\theta_3 = \theta_f = 70°$, there is no need of finding them.

$\theta_i = \theta_s + \dfrac{\Delta\theta}{\Delta x}(x_i - x_s)$ and thus

$\theta_2 = 30° + \dfrac{40°}{2} \times 1 = 50°$

Similarly, As $\varphi_1 = \varphi_s = 40°$ and $\varphi_3 = \varphi_f = 100°$, there is no need of finding them.

$\varphi_2 = 40° + \dfrac{60°}{0.602}(0.954 - 0.602) = 75°$

This can be written in a tabular form also.

Position	x	y	θ	φ
1	2	0.602	30°	40°
2	3	0.954	50°	75°
3	4	1.204	70°	100°

Thus, we have the following equations,

$k_1 \cos 40° + k_2 \cos 30° + k_3 = \cos(-10°)$

$k_2 \cos 75° + k_2 \cos 50° + k_3 = \cos(-25°)$

$k_3 \cos 100° + k_2 \cos 70° + k_3 = \cos(-30°)$

Using Cramer's rule,

$\Delta = 0.0560$

$\Delta_1 = 0.0146 \quad k_1 = 0.2607 = \dfrac{d}{a}$

$\Delta_2 = -0.0135 \quad k_2 = -0.241 = -\dfrac{d}{c}$

$\Delta_3 = 0.0557$

$k_3 = 0.995 = \dfrac{a^2 - b^2 + c^2 + d^2}{2ac}$

which gives

$a = 3.83$ units

$b = 1.14$ units

$c = 4.14$ units

and $d = 1$ unit

Figure 5.32 shows the required mechanism.

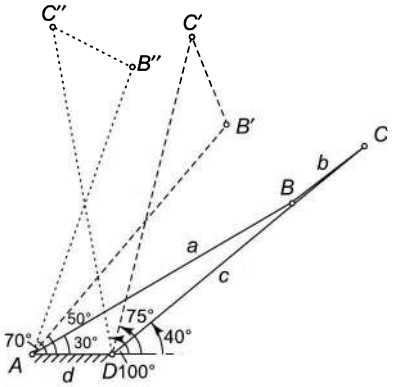

Fig. 5.32

Example 5.10 *Design a four-link mechanism to coordinate the motion of the input and the output links governed by a function y = log x for 0 < x ≤ 8. Take δx = 1. The range for θ is from 15° to 120° whereas for, φ it is from 20° to 150°.*

Solution The angular positions of the input and the output links are tabulated below:

X	y	θ	φ
1	0	15°	20°
2	0.69	30°	*63°
3	1.10	45°	89°
4	1.39	60°	107°
5	1.61	75°	121°
6	1.79	90°	132°
7	1.95	105°	142°
8	2.08	120°	150°

$$* 20° + (150° - 20°) \times \frac{0.69}{2.08} = 63°$$

It is required to design the mechanism so that the input and the output links pass through eight specified positions. It is not possible to design such a mechanism. However, using the least-square technique, a mechanism may be devised which gives the least deviation from the specified positions.

The dimensions of various links are shown in Fig. 5.33 using the program given in Fig. 5.27.

```
Enter i the number of specified positions 8
Enter i values of th[i] and ph[i]
   15  30  45  60  75  90  105  120
   20  63  89  107  121  132  142  150
   a        b          c      d
   2.42    0.91      2.37  1.00
```

Fig. 5.33

Figure 5.34 shows the required mechanism which will give the least deviation from the specified positions.

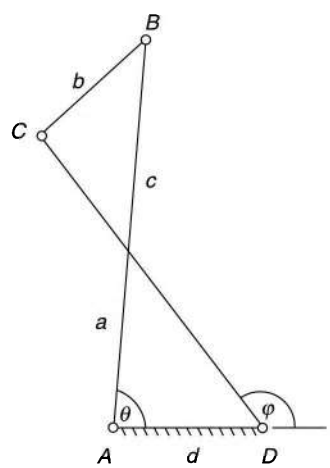

Fig. 5.34

5.9 CHEBYCHEV SPACING

In function-generation problems, the output is related to the input through a function $y = f(x)$ and it is required to obtain the dimensions of a linkage to satisfy this relationship. In general, a linkage synthesis problem does not have exact solution over its entire range of travel. However, it is usually possible to design a linkage which exactly satisfies the desired function at a few chosen positions known as *precision* or *accuracy*

points or *positions*. It is assumed that the design deviates very slightly from the desired function between the precision positions and that the deviation is within acceptable limit. The difference between the function prescribed and the function produced by the designed linkage is known as the *structural error*. For most of the cases, this error may be about 3 to 4 per cent.

The amount of structural error also depends upon the choice of the precision points. A judicious use of precision points greatly affects the structural error. Thus, a set of precision points may be selected for use in the synthesis of the linkage which can minimize the structural error and a fair choice is provided by *Chebychev spacing*. For n accuracy positions in the range $x_o \le x \le x_{n+1}$, the Chebychev spacing is given by

$$x_i = \frac{x_{n+1} + x_o}{2} - \frac{x_{n+1} - x_o}{2} \cos \frac{(2i-1)\pi}{2n} \quad \text{where } i = 1, 2, 3 \ldots n$$

For example, if it is desired to design a linkage to satisfy the function $y = \sqrt{x}$ over the range $1 \le x \le 3$ using three precision positions, then the three values of x are

$$x_1 = \frac{3+1}{2} - \frac{3-1}{2} \cos \frac{(2-1)\pi}{2 \times 3} = 2 - \cos \frac{\pi}{6} = 1.134$$

$$x_2 = 2 - \cos \frac{3\pi}{6} = 2$$

$$x_3 = 2 - \cos \frac{5\pi}{6} = 2.866$$

And the corresponding values of y, $\quad y_1 = 1.065; \quad y_1 = 1.414; \quad y_1 = 1.693$

Graphical approach Chebychev spacing of accuracy points can also be found easily by the graphical method. The method is as follows:

1. Draw a circle of diameter equal to the range Δx $(= x_{n+1} - x_o)$.
2. Inscribe a regular polygon of $2n$ sides in the circle such that the two sides of the polygon are perpendicular to the x-axis.
3. Draw projections of the vertices of the polygon on the x-axis. The perpendiculars intersect the diameter Δx at the precision points.

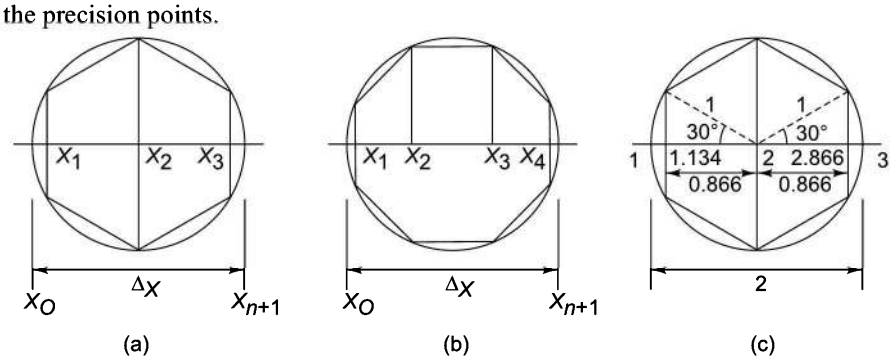

Fig. 5.35

Figure 5.35(a) and (b) shows the graphical method for $n = 3$ and $n = 4$ respectively. Figure 5.35(c) shows the construction for the above example.

Example 5.11 *Design a four-link mechanism if the motions of the input and the output links are governed by a function $y = x^{1.5}$ and x varies from 1 to 4. Assume θ to vary from 30° to 120° and φ from 60° to 130°. The length of the fixed link is 30 mm. Use Chebychev spacing of accuracy points.*

Solution

$$x_i = \frac{x_{n+1} + x_o}{2} - \frac{x_{n+1} - x_o}{2} \cos \frac{(2i-1)\pi}{2n}$$

$$x_1 = \frac{4+1}{2} - \frac{4-1}{2} \cos \frac{(2-1)\pi}{2 \times 3} = 2.5 - 1.5 \cos \frac{\pi}{6} = 1.2$$

$$x_2 = 2.5 - 1.5 \cos \frac{3\pi}{6} = 2.5$$

$$x_3 = 2.5 - 1.5 \cos \frac{5\pi}{6} = 3.8$$

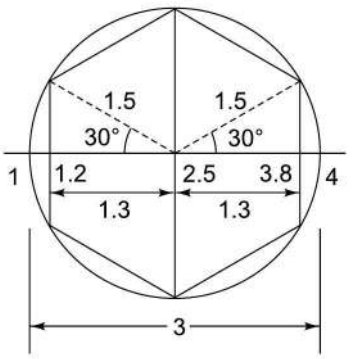

Fig. 5.36

Figure 5.36 shows Chebychev spacing of accuracy points by graphical method.

Let subscripts s and f indicate the start and final values in the range.

The corresponding values of y,

$y_1 = 1.315$; $y_1 = 3.953$; $y_1 = 7.408$;

Also, $y_s = 1^{1.5} = 1$; and $y_f = 4^{1.5} = 8$

Range of $x = x_f - x_s = 4 - 1 = 3$

Range of $y = y_f - y_s = 8 - 1 = 7$

$$\theta_1 = 30^\circ + \frac{120^\circ - 30^\circ}{4-1}(1.2-1) = 36^\circ;$$

$$\varphi_1 = 60^\circ + \frac{130^\circ - 60^\circ}{8-1}(1.315-1) = 63.2^\circ;$$

$$\theta_2 = 30^\circ + \frac{90^\circ}{3}(2.5-1) = 75^\circ;$$

$$\varphi_2 = 60^\circ + \frac{70^\circ}{7}(3.953-1) = 89.5^\circ;$$

$$\theta_3 = 30^\circ + \frac{90^\circ}{3}(3.8-1) = 114^\circ;$$

$$\varphi_3 = 60^\circ + \frac{70^\circ}{7}(7.408-1) = 124.1^\circ;$$

Now, $k_1 \cos 63.2° + k_2 \cos 36° + k_3 = \cos (36° - 63.2°) = \cos 27.2°$

$k_1 \cos 89.5° + k_2 \cos 75° + k_3 = \cos (75° - 89.5°) = \cos 14.5°$

$k_1 \cos 124.1° + k_2 \cos 114° + k_3 = \cos (114° - 124.1°) = \cos 10.1°$

Solving by Cramer's rule,

$k_1 = 2.286$; $k_2 = -1.98$; $k_3 = 1.461$

Now, $d = 30$ mm

$$k_1 = \frac{30}{a} = 2.286 \quad \text{or} \quad a = 13.1 \text{ mm}$$

$$k_2 = -\frac{30}{c} = -1.98 \quad \text{or} \quad c = 15.2 \text{ mm}$$

$$k_3 = \frac{13.1^2 - b^2 + 15.2^2 + 30^2}{2 \times 13.1 \times 15.2} \quad \text{or} \quad b = 26.8 \text{ mm}$$

Thus, a, b, c and d are 13.1 mm, 26.5 mm, 15.2 mm and 30 mm respectively.

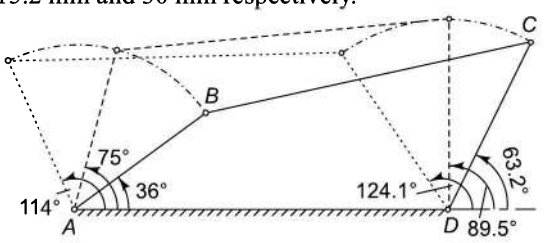

Fig. 5.37

The mechanism is shown in Fig. 5.37 in three positions.

5.10 PATH GENERATION

A four-link mechanism *ABCD* with a coupler point *E* is shown in Fig. 5.38. Three positions of the input link (θ_1, θ_2, θ_3) and three positions of the coupler point *E* given by three values of *r* and α, i.e., r_1, r_2, r_3 and α_1, α_2, α_3 are known. It is required to find the dimensions of *a*, *c*, *e* and *f* along with the location of the pivots *A* and *D* given by *g*, γ and *h*, ψ respectively so that the coupler point *E* generates the specified path with the motion of the input link *AB*.

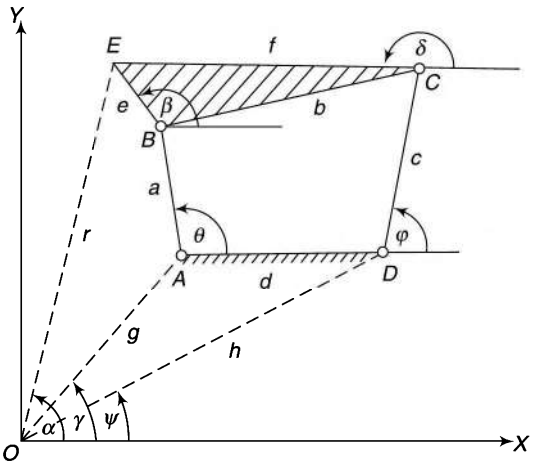

Fig. 5.38

For the loop *OABE*, considering the links to be vectors

$$g \cos \gamma + a \cos \theta + e \cos \beta - r \cos \alpha = 0 \quad (5.5)$$

and $$g \sin \gamma + a \sin \theta + e \sin \beta - r \sin \alpha = 0 \quad (5.6)$$

or $$e \cos \beta = r \cos \alpha + g \cos \gamma - a \cos \theta$$

and $$e \sin \beta = r \sin \alpha + g \sin \gamma - a \sin \theta$$

Squaring and adding,

$$e^2 = r^2 + g^2 + a^2 - 2gr (\cos \alpha \cos \gamma + \sin \alpha \sin \gamma)$$

$$+ 2ag (\cos \theta \cos \gamma + \sin \theta \sin \gamma) - 2ar (\cos \theta \cos \alpha + \sin \theta \sin \alpha)$$

or $$2ar \cos (\theta - \alpha) + 2gr \cos (\alpha - \gamma) + (e^2 - a^2 - g^2) = r^2 + 2ag \cos (\theta - \gamma)$$

or $$2ar \cos (\theta - \alpha) + 2gr \cos (\alpha - \gamma) + k = r^2 + 2ag \cos (\theta - \gamma) \quad (5.7)$$

where

$$k = e^2 - a^2 - g^2 \quad (5.8)$$

Inserting the values of r_1, r_2, r_3; α_1, α_2, α_3 and θ_1, θ_2, θ_3, we obtain three equations. The unknowns are *a*, *g*, *e* and γ. Thus, for three equations, there are four unknowns and therefore, equations cannot be solved. However, the value of one of the unknown can be assumed. Assuming the value of γ, we are left with three unknowns *a, g, e* and there are three equations to solve them.

Even now, the equations cannot be solved as such, as these are non-linear equations. However, by making the following substitutions, these can be solved easily.

Let

$$\left.\begin{aligned} a &= l_a + \lambda m_a \\ g &= l_g + \lambda m_g \\ k &= l_k + \lambda m_k \end{aligned}\right\} \quad (5.9)$$

where $$\lambda = ag$$

$$= (l_a + \lambda m_a)(l_g + \lambda m_g)$$

$$= l_a l_g + \lambda l_a m_g + \lambda l_g m_a + \lambda^2 m_a m_g$$

or $$m_a m_g \lambda^2 + (l_a m_g + l_g m_a - 1)\lambda + l_a l_g = 0$$

or $$A\lambda^2 + B\lambda + C = 0$$

or

$$\lambda = \frac{-B \pm \sqrt{B^2 - 4AC}}{2A} \quad (5.10)$$

where

$$A = m_a m_g$$

$$B = l_a m_g + l_g m_a - 1$$
$$C = l_a l_g$$

Thus, Eq. (5.7) becomes,

$$2(l_a + \lambda m_a) r \cos(\theta - \alpha) + 2(I_g + \lambda m_g) r \cos(\alpha - \gamma) + I_k + \lambda m_k = r^2 + 2\lambda \cos(\theta - \gamma)$$

Separating the components into two groups; one with and the other without λ,

$$I_a[2r \cos(\theta - \alpha)] + I_g[2r \cos(\alpha - \gamma)] + l_k = r^2 \tag{5.11}$$

$$m_a[2r \cos(\theta - \alpha)] + m_g[2r \cos(\alpha - \gamma)] + m_k = 2 \cos(\theta - \gamma) \tag{5.12}$$

From Eq. (5.11), three equations can be written as,

$$l_a[2r_1 \cos(\theta_1 - \alpha_1)] + I_g[2r_1 \cos(\alpha_1 - \gamma)] + l_k = r_1^2 \tag{5.13}$$

$$l_a[2r_2 \cos(\theta_2 - \alpha_2)] + I_g[2r_2 \cos(\alpha_2 - \gamma)] + l_k = r_2^2 \tag{5.14}$$

$$l_a[2r_3 \cos(\theta_3 - \alpha_3)] + I_g[2r_3 \cos(\alpha_3 - \gamma)] + l_k = r_3^2 \tag{5.15}$$

These are three linear equations l_a, l_g and l_k and can be solved by applying Cramer's rule or by other means.

Similarly, m_a, m_g, and m_k can also be found.

As l_a, l_g, l_k and m_a, m_g, m_k have been found, a, g and k can be calculated from the relations of Eq. (5.9).

Also, $$e = \sqrt{k + a^2 + g^2} \qquad \text{[from Eq. (5.8)]}$$

From Eq. (5.5), three values of β can be found,

$$e \cos\beta = r \cos\alpha - g \cos\gamma - a \cos\theta$$

$$\beta_1 = \cos^{-1}\left[\frac{r_1 \cos\alpha_1 - g \cos\gamma - a \cos\theta_1}{e}\right] \tag{5.16}$$

Similarly, β_2 and β_3 can be found.

Thus, we have obtained the values of a, e, g, γ and β. The whole procedure can be repeated for the loop $ODCE$. The following equations are formed,

$$h \cos\psi + c \cos\varphi + f \cos\delta - r \cos\alpha = 0 \tag{5.17}$$

$$h \sin\psi + c \sin\varphi + f \sin\delta - r \sin\alpha = 0 \tag{5.18}$$

These equations are similar to Eqs (5.5) and (5.6).

Assuming
$$f = l_f + \lambda' m_f$$
$$h = l_h + \lambda' m_h$$
$$p = l_p + \lambda' m_p$$

Two sets of equations similar to Eqs (5.11) and (5.12) are obtained by eliminating ϕ as given below:

$$l_f[2r \cos(\delta - \alpha)] + l_k[2r \cos(\alpha - \psi)] + l_p = r^2 \tag{5.19}$$

$$m_f[2r \cos(\delta - \alpha)] + m_h[2r \cos(\alpha - \psi)] + m_p = 2 \cos(\delta - \psi) \tag{5.20}$$

In these equations, α and r are known. ψ can be assumed. Also, assuming δ_1, the values of δ_2 and δ_3 can be found as follows:

The angular displacements of the coupler link BCE is the same at the points B and C,

$$\delta_2 - \delta_1 = \beta_2 - \beta_1$$

or
$$\delta_2 = \delta_1 + (\beta_2 - \beta_1) \tag{5.21}$$

Similarly,
$$\delta_3 = \delta_1 + (\beta_3 - \beta_1) \tag{5.22}$$

Solving the Eqs (5.19) and (5.20), the values of f, h and c can be known.

As the points *A, B, E, C* and *D* are located, the dimensions *a*, *b*, *c*, *d*, *e* and *f* can be obtained. Figure 5.39 shows a program for the solution of such a problem.

```
#include<stdio.h>
#include<conio.h>
#include<math.h>
void main()
(
     FILE*fp;
     int k,j;
     float al,a2,a3,all,a22,a33,a12,a21,g12,g21,e12,e21,akl,
     ak2,ak3,all,al2,al3,aa,gl,g2,g3,tll,t22,t33,tbl,tb2,tb3,
     gg,gamm,ss,si,dll,d22,d33,rl,r2,r3,pl,p2,p3,tl,t2,t3,
     cl,c2,c3,alg,ala,alk,ama,amg,amk,bb,cc,all,el,e2,squ,
     betl,bet2,bet3,pll,p22,p33,e3,gs,del,dell,del2,del3,rad;
     clrscr();
     printf("Enter values of tbl,tb2,tb3,rl,r2,r3,all,all,
     al2,al3,");
     printf("gamm,si,dell\n");
     scanf("%f %f %f %f %f %f %f %f %f %f %f %f",&tbl,&tb2,&tb3,&rl,
     &r2,&r3,&all,&al2,&al3,&gamm,&si,&dell);
     rad=4*atan(1)/180;
     tll=tbl*rad;
     t22=tb2*rad;
     t33=tb3*rad;
     all=all*rad;
     a22=al2*rad;
     a33=al3*rad;
     gg=gamm*rad;
     ss=si*rad;
     dll=dell*rad;
      for(j=O;j<3;j-H)
      {
         pl=2*rl*cos(tll-all);
         p2=2*r2*cos(t22-a22);
         p3=2*r3*cos(t33-a33);
         tl=2*rl*cos(all-gg);
         t2=2*r2*cos(a22-gg);
         t3=2*r3*cos(a33-gg);
         cl=rl*rl;
         c2=r2*r2;
         c3=r3*r3;
             for(k=O;k<2;k++)
             (
             del=pl*(t2-t3)+tl*(p3-p2)+(p2*t3-p3*t2);
             dell=cl*(t2-t3)+tl*(c3-c2)+(c2*t3-c3*t2);
             del2=pl*(c2-c3)+cl*(p3-p2)+(p2*c3-p3*c2);
             del3=pl*(t2*c3-t3*c2)+tl*(c2*p3-c3*p2);
             +cl*(p2*t3-p3*t2);
             akl=dell/del;
```

```
  ak2=del2/del;
  ak3=del3/del;
  if(k==O)
  {
          ala=akl;
          alg=ak2;
          alk=ak3;
          cl=2*cos(tll-gg);
          c2=2*cos(t22-gg);
          c3=2*cos(t33-gg);
          }
  }
ama=akl;
amg=ak2;
amk=ak3;
aa=ama*amg;
bb=ala*amg+alg*ama-l;
cc=ala*alg;
squ=bb*bb-4*aa*cc;
if(squ>O)
 {
 all=sqrt(squ);
 all=(-bb-all)/(2*aa);
 al2=(-bb+all)/(2*aa);
 al=ala+all*ama;
 gl=alg+all*amg;
 a2=ala+al2*ama;
 g2=alg+al2*amg;
 el=sqrt(alk+all*amk+al*al+gl*gl);
 e2=sqrt(alk+al2*amk+a2*a2+g2*g2);
 if(j==O){printf("     g        a        e");
 printf("        h        c        f\n"); }
 if(j==l){printf("%8.2f  %8.2f  %8.2f  %8.2f  %8.2f  %8.2f
 \n",gl2,al2,el2,gl,el,al);
 printf("%8.2f  %8.2f  %8.2f  %8.2f  %8.2f  %8.2f\n",
 gl2,al2,el2,g2,e2,a2); }
 if (j==2) {printf("%8.2f  %8.2f  %8.2f  %8.2f  %8.2f
 %8.2f  \n",g21,a21,e21,gl,el,al);
 printf("%8.2f  %8.2f  %8.2f  %8.2f  %8.2f  %8.2f  \n",
 g21,al2,e21,g2,e2,a2); }
 if(j==0)
 {
          gl2=gl;
          al2=al;
          el2=el;
          g21=g2;
          a21=a2;
          e21=e2;
          gs=gg;
          pll=tll;
```

```
                p22=t22;
                p33=t33;
        }
        if(j==1)
        {
                g1=g21;
                a1=a21;
                e1=e21;
                t11=d11;
                t22=d22;
                t33=d33;
                gg=gs;
                t11=p11;
                t22=p22;
                t33=p33;
                }
        bet1=acos((r1*cos(a11)-g1*cos(gg)-a1*cos(t11))/e1);
        bet2=acos((r2*cos(a22)-g1*cos(gg)-a1*cos(t22»/e1);
        bet3=acos((r3*cos(a33)-g1*cos(gg)-a1*cos(t33»)/e1);
        d22=d11+bet2-bet1;
        d33=d11+bet3-bet1;
        a3=a2;
        g3=g2;
        e3=e2;
        p11=t11;
        p22=t22;
        p33=t33;
        t11=d11;
        t22=d22;
        t33=d33;
        gs=gg;
        gg=ss;
    }
 }
 getch();
}
```

Fig. 5.39

The input variables are:

`tb1, tb2, tb3`	angular displacement of the input link *AB* (degrees)
`r1, r2, r3`	radial distances of the coupler point from origin (mm)
`al1, al2, al3`	angular position of the coupler point (degrees)
`gamm`	assumed value of the angle γ (degrees)
`si`	assumed value of the angle ψ (degrees)
`del1`	assumed value of the angle δ_1 (degrees)

The output variables are

`g, a, e, h, c, f`	distances or lengths of the links in mm

If more than three positions of the input link along with the same number of positions of the coupler point

are known, the mechanism can be synthesized using the least-square technique. The deviations of the coupler point E from the prescribed positions will be minimum in such a design. Thus,

$$S_1 = [\, l_a \{2r\cos(\theta - \alpha)\} + l_g \{2r\cos(\alpha - \gamma)\} + l_k - r^2]^2$$

$$S_2 = [\, m_a \{2r\cos(\theta - \alpha)\} + m_g \{2r\cos(\alpha - \gamma)\} + m_k - 2\cos(\theta - \alpha)]^2$$

For minimum deviations,

$$\frac{\delta S_1}{\delta l_a} = 0, \quad \frac{\delta S_1}{\delta l_g} = 0, \quad \frac{\delta S_1}{\delta l_k} = 0$$

and

$$\frac{\delta S_2}{\delta l_a} = 0, \quad \frac{\delta S_2}{\delta l_g} = 0, \quad \frac{\delta S_2}{\delta l_k} = 0$$

when $\dfrac{\delta S_1}{\delta l_a} = 0,$

$$\sum_1^n 2\left[l_a 2r\cos(\theta-\alpha) + l_g.2r\cos(\alpha-\gamma) + l_k - r^2\right].2r\cos(\theta-\alpha) = 0$$

or

$$l_a \sum_1^n \left[2r\cos(\theta-\alpha)\right]^2 + l_g \sum_1^n \left[2r\cos(\alpha-\gamma)\right]\left[2r\cos(\theta-\alpha)\right]$$
$$+ l_k \sum_1^n \left[2r\cos(\theta-\alpha)\right] = \Sigma\left[2r\cos(\theta-\alpha)\right]r^2$$

Similarly for $\dfrac{\delta S_1}{\delta l_g} = 0$ and $\dfrac{\delta S_1}{\delta l_k} = 0,$

$$l_a \sum_1^n \left[2r\cos(\theta-\alpha)\right]\left[2r\cos(\alpha-\gamma)\right] + I_g \sum_1^n \left[2r\cos(\alpha-\gamma)\right]^2$$
$$+ l_k \sum_1^n \left[2r\cos(\alpha-\gamma)\right] = \sum_1^n \left[2r\cos(\alpha-\gamma)\right]r^2$$

$$l_a \sum_1^n \left[2r\cos(\theta-\alpha)\right] + l_g \sum_1^n \left[2r\cos(\alpha-\gamma)\right] + l_k = \sum_1^n r^2$$

Inserting n values of r, α, θ (given) and one value of γ (assumed), l_a, l_g and l_k can be calculated by using the Cramer's rule, etc.

Similarly, using the conditions $\dfrac{\delta S_2}{\delta l_a} = 0, \dfrac{\delta S_2}{\delta l_g} = 0$ and $\dfrac{\delta S_2}{\delta l_k} = 0,$ the values of m_a, m_g and m_k can be found. The rest of the procedure is as given earlier for three values of α, θ and r.

Example 5.12 *Design a four-link mechanism to coordinate three positions of the input link with three positions of the coupler point, the data for which is given below:*

$\theta_1 = 110°$	$r_1 = 80$ mm	$\alpha_1 = 65°$
$\theta_2 = 77°$	$r_2 = 90$ mm	$\alpha_2 = 56°$
$\theta_3 = 50°$	$r_3 = 96$ mm	$\alpha_3 = 48°$

Assume the values of γ, ψ and δ_1 as 20°, 10° and 150° respectively.

Solution: The procedure is as follows:

(a) Solve the simultaneous Eqs (5.13), (5.14) and (5.15) and obtain

$l_a = 8.14 \qquad l_g = 38.57 \qquad l_k = 1115.3$

(b) Write three equations from Eq. (5.12) and obtain

$m_a = 0.009\,58$ $m_g = 0.0173$ $m_k = -3.045$

(c) Find two values of λ using Eq. (5.10).

$\lambda_1 = 945$ $\lambda_2 = 2001$

(d) Using $\lambda = 945$, obtain a, g and k from relations given in Eq. (5.9). Also, find e from the relation of Eq. (5.8).

$a = 17.2$ $g = 55$ $e = 39.4$

(e) Using three relations for β [Eq. (5.16)], find β_1, β_2, β_3.

$\beta_1 = 107.7°$ $\beta_2 = 97.5°$ $\beta_3 = 87.7°$

Thus, all the parameters for the loop *OABEO* are known.

(f) Obtain δ_2 and δ_3 from relations of Eqs (5.21) and (5.22).

$\delta_2 = 139.8°$ $\delta_3 = 130.1°$

The same procedure is adopted for the loop *ODCEO*.

(g) Solving Eqs (5.19) and (5.20), the following values are obtained:

$l_f = 71.15$ $l_h = 62.16$ $l_p = 1688$

$m_f = 0.0262$ $m_h = 0.00342$ $m_p = -2.21$

(h) Write three equations similar to Eq. (5.9) in λ' and obtain

$\lambda'_1 = -9507$ $\lambda'_2 = 5197$

When $\lambda' = -9507$; $f = -320.3$; $h = 29.7$ and $c = 355.2$

When $\lambda' = 5197$; $f = 65.1$; $h = 79.9$ and $c = 28.5$

(i) When $\lambda = 2001$, another set of a, g and e and two more sets of f, h and c are obtained.

```
Enter values oftbl, tb2, tb3, fl, r2,
r3, all, al2, al3, gamm, si, dell
1 1 0   7 7   5 0   8 0   9 0   9 6
65 56 48 20 10 150

   g       a       e       h       c       f
 54.95   17.20   39.40   20.69  355.21  -320.28
 54.95   17.20   39.40   79.91   28.50   65.04
 73.25   27.31   33.68   23.31   96.77  -47.12
 73.25   27.31   33.68  103.50   20.07   71.12
```

Fig. 5.40

Figure 5.40 shows the input and the four sets of values obtained by using the program of Fig. 5.39.

Figure 5.41 shows the solution obtained from the second set.

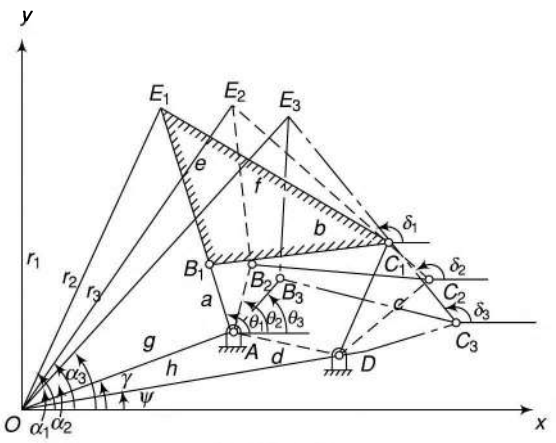

Fig. 5.41

5.11 MOTION GENERATION (RIGID-BODY GUIDANCE)

Assume that a rigid body *IJKL* is required to be guided through three finitely separated positions as shown in Fig. 5.42. The three positions of the body may be specified by taking any line on the body and marking a point E on the same. Then three positions of the point E may be specified by the radial distances from the assumed origin and its angular positions, i.e., by r_1, α_1; r_2, α_2, and r_3, α_3; and angular inclination of the line with the x-axis by the angles β_1, β_2 and β_3.

Now if it is assumed that the body is fixed to the coupler link, it becomes a problem similar to that of path generation except that now three values of β are known instead of θ. Thus, now angle θ can be eliminated

from Eq. (5.5) and (5.6) instead of β. The equations formed are exactly the same if θ is replaced by β in Eqs (5.11) and (5.12). Also, as β is directly known, there is no need of using Eq. 5.16.

The program given in Fig. 5.43 solves this type of problem. The input variables are

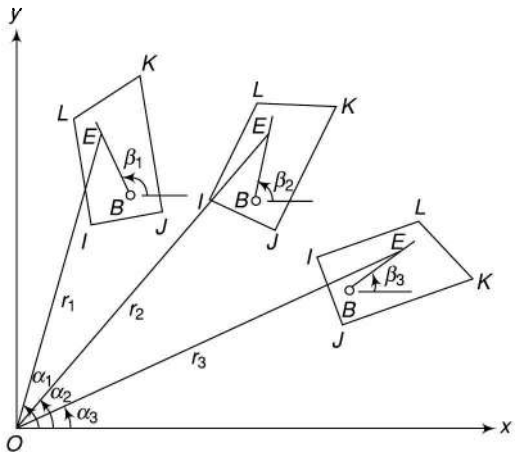

Fig. 5.42

```
#include<stdio.h>
#include<conio.h>
#include<math.h>
void main ( )
 {
  FILE *fp;
  int k,j;
  float al,a2,a3,all,a22,a33,al2,a21,gl2
  ,g21,el2,e21,akl,
  ak2,ak3,all,al2,al3,aa,gl,g2,g3,tll,t
  22,t33,tbl,tb2,
  tb3,gg,gamm,ss,si,dll,d22,d33,rl,r2,r
  3, pl,p2,p3,tl,t2,
  t3,cl,c2,c3,alg,ala,alk,ama,amg,amk,bb,cc,all,el,e2,
  squ,betl,bet2,bet3,pll,p22,p33,e3,gs,del,dell,del2,
  del3,rad;
  clrscr( ) ;
  printf("Enter values of tbl,tb2,tb3,rl,r2,r3,all,all,");
  printf("al2,al3,gamm,si,dell\n");
  scanf("%f %f %f %f %f %f %f %f %f %f %f %f",&tbl,&tb2,&tb3,&rl,&r2,
  &r3,&all,&al2,&al3,&gamm,&si,&dell);
  rad=4*atan(l)/180;
  tll=tbl*rad;
  t22=tb2*rad;
  t33=tb3*rad;
  all=all*rad;
  a22=al2*rad;
  a33=al3*rad;
  gg=gamm*rad;
  ss=si*rad;
  dll=dell*rad;
  for (j=O; j<3; j++)
  {
   pl=2*rl*cos(tll-all};
   p2=2*r2*cos(t22-a22);
   p3=2*r3*cos(t33-a33);
   tl=2*rl*cos(all-gg};
   t2=2*r2*cos(a22-gg};
   t3=2*r3*cos(a33-gg);
   cl=rl*rl;
   c2=r2*r2 ;
   c3=r3*r3;
    for(k=O; k<2; k++)
```

```
{
 del=pl*(t2-t3)+tl*(p3-p2)+(p2*t3-p3*t2);
 dell=cl*(t2-t3)+tl*(c3-c2)+(c2*t3-c3*t2);
 del2=pl*(c2-c3)+cl*(p3-p2)+(p2*c3-p3*c2);
 del3=pl*(t2*c3-t3*c2)+tl*(c2*p3-c3*p2)
 +cl*(p2*t3-p3*t2);
 akl=dell/del;
 ak2=del2/del;
 ak3=del3/del;
  if (k==O)
  {
   ala=akl;
   alg=ak2;
   alk=ak3;
   cl=2*cos(tll-gg);
   c2=2*cos(t22-gg):
   c3=2*cos(t33-gg):
  }
 }
ama=akl;
amg=ak2:
amk=ak3:
aa=ama*amg:
bb=ala*amg+alg*ama-l:
cc=ala*alg;
squ=bb*bb-4*aa*cc:
 if (squ>O)
 {
  all=sqrt(squ):
  all=(-bb-all)/(2*aa):
  al2=(-bb+all)/(2*aa):
  al=ala+all*ama:
  gl=alg+all*amg:
  a2=ala+al2*ama;
  g2=alg+al2*amg:
  el=sqrt(alk+all*amk+al*al+gl*gl):
  e2=sqrt(alk+al2*amk+a2*a2+g2*g2):
  if(j==O) ( printf("        g        e        a")
         printf("    h        c      f\n"):    }
  if(j==l) (printf("%8.2f %8.2f %8.2f %8.2f %8.2f
  %8.2f \n",gl2,al2,el2,gl,el,al):
  printf("%8.2f %8.2f %8.2f %8.2f %8.2f %8.2f \n",
  gl2,al2,el2,g2,e2,a2): }
  if(j==2){printf("%8.2f %8.2f %8.2f %8.2f %8.2f
  %8.2f \n",g21,a21,e21,gl,el,al):
  printf("%8.2f %8.2f %8.2f %8.2f %8.2f %8.2f \n",
  g21,a21,e21,g2,e2,a2);}
  if (j==O)
  {
         gl2=gl:
```

```
                a12=a1;
                e12=e1:
                g21=g2:
                a21=a2:
                e21=e2:
                gs=gg:
                p11=t11:
                p22=t22;
                p33=t33:
            }
            if(j==1)
            {
                g1=g21:
                a1=a21:
                e1=e21;
                t11=d11:
                t22=d22:
                t33=d33:
                gg=gs:
                t11=p11;
                t22=p22;
                t33=p33;
        }
        d22=d11+t22-t11;
        d33=d11  +t33-t11;
        a3=a2;
        g3=g2;
        e3=e2;
        p11=t11;
        p22=t22;
        p33=t33;
        t11=d11;
        t22=d22;
        t33=d33;
        gs=gg;
        gg=ss;
    }
            }
    getch( );
}
```

Fig. 5.43

The input variables are

`tb1, tb2, tb3`	angles β_1, β_2 and β_3 respectively (degrees)
`r1, r2, r3`	radial distances of point E from the origin (mm)
`al1, al2, al3`	angular position of point E (degrees)
`gamm`	assumed value of the angle γ (degrees)

`si`	assumed value of the angle ψ (degrees)
`del1`	assumed value of the angle δ_1 (degrees

The output variables are

`g, a, e, h, c, f`	distances or lengths of the links in mm

Example 5.13 *Design a four-link mechanism to guide a rigid body through three finitely separated positions given by*

$\beta_1 = 105°$	$r_1 = 80$ *mm*	$\alpha_1 = 65°$
$\beta_2 = 95°$	$r_2 = 90$ *mm*	$\alpha_2 = 56°$
$\beta_3 = 85°$	$r_3 = 96$ *mm*	$\alpha_3 = 48°$

Assume the values of γ, ψ *and* δ_1 *as 20°, 10° and 150° respectively.*

Solution: Figure 5.44 shows the input and the four sets of values of the output obtained by using the program of Fig. 5.43.

```
Enter values of tb1, tb2, tb3, r1, r2, r3, al1, al2, al3, gamm, si, del1
105  95  85  80  90  96  65  56  48  20  10  150
      g          e          a          h          c          f
   27.04     102.24      49.76      32.33     240.67    -201.61
   27.04     102.24      49.76      81.82      27.25      66.79
   53.75      40.60      16.14      32.33     240.67    -201.61
   53.75      40.60      16.14      81.82      27.25      66.79
```

Fig. 5.44

Summary

1. Dimensional synthesis of a pre-conceived type mechanism seeks to determine the principal dimensions of various links that satisfy the requirements of motion of the mechanism.
2. *Function generation* involves correlating the rotary or the sliding motion of the input and the output links. The motion of the output and the input links may be prescribed by an arbitrary function $y = f(x)$.
3. When a point on the coupler or the floating link of a mechanism is to be guided along a prescribed path, it is said to be a *path-generation* problem. This guidance of the path of the point may or may not be coordinated with the movement of the input link.
4. *In motion generation,* a mechanism is designed to guide a rigid body in a prescribed path.
5. A *pole* of a moving link is the centre of its rotation with respect to a fixed link.
6. If the rotation of the link is considered relative to another moving link, the pole is known as the *relative pole*.
7. The problems of function generation for two and three accuracy positions are easily solved by the relative pole method.
8. In the inversion method, there is direct use of the concept of inversion.
9. *Freudenstein's* equation is
$$\frac{d}{a}\cos\varphi - \frac{d}{c}\cos\theta + \frac{a^2 - b^2 + c^2 + d^2}{2ac} = \cos(\theta - \varphi) = \cos(\varphi - \theta)$$
and is used to coordinate positions of the input and output links of the four-link mechanism.
10. For n accuracy positions in the range $x_0 \le x \le x_{n+1}$, the Chebychev spacing is given by
$$x_i = \frac{x_{n+1} + x_0}{2} - \frac{x_{n+1} - x_0}{2}\cos\frac{(2i-1)\pi}{2n}$$
where i = 1, 2, 3 ....n

Exercises

1. What do you mean by dimensional synthesis of a pre-conceived type mechanism?
2. Explain the terms: function generation, path generation and motion generation.

3. What is the pole of a coupler link of four-link mechanism? Enumerate its properties. What is a relative pole?
4. Describe the procedure to design a four-link mechanism by relative pole method when three positions of the input (θ_1, θ_2, θ_3) and the output link (φ_1, φ_2, φ_3) are known.
5. Describe the procedure to design a slider-crank mechanism by relative pole method when three positions of the input link (θ_1, θ_2, θ_3) and the slider (s_1, s_2, s_3) are known.
6. Discuss the procedure to design the mechanisms by inversion method.
7. What is *Freudenstein's* equation? How is it helpful in designing a four-link mechanism when three positions of the input (θ_1, θ_2, θ_3) and the output link (φ_1, φ_2, φ_3) are known?
8. What is least-square technique? When is it useful in designing a four-link mechanism?
9. What do you mean by *precision* or *accuracy* points in the design of mechanisms? What is *structural error*?
10. What is *Chebychev spacing*? What is its significance?
11. Design a four-link mechanism to coordinate three positions of the input and the output links for the following angular displacements using relative pole method:
    $\theta_{12} = 50°$ $\varphi_{12} = 40°$
    $\theta_{13} = 70°$ $\varphi_{13} = 75°$
12. Design a slider-crank mechanism to coordinate three positions of the input link and the slider for the following angular and linear displacements of the input link and the slider respectively:
    $\theta_{12} = 30°$ $s_{12} = 100$ mm
    $\theta_{13} = 90°$ $s_{13} = 200$ mm
    Take eccentricity of the slider as 10 mm. Use the relative pole method.
13. In a four-link mechanism, the angular displacements of the input link are 30° and 75° and of the output link, 40° and 65° respectively. Design the mechanism using the inversion method.
14. Design a slider-crank mechanism to coordinate three positions of the input and of the slider when the angular displacements of the input link are 40° and 75° and linear displacements of the slider are 55 mm and 90 mm respectively with an eccentricity of 20 mm. Use the inversion method.
15. For the following angular displacements of the input and the output links, design a four-link mechanism:
    $\theta_{12} = 40°$ $\varphi_{12} = 45°$
    $\theta_{13} = 85°$ $\varphi_{13} = 75°$
    $\theta_{13} = 120°$ $\varphi_{13} = 110°$
16. Design a four-link mechanism that coordinates the following three positions of the coupler point if the positions are indicated with respect to coordinate axes:
    $r_1 = 60$ mm $\alpha_1 = 75°$
    $r_2 = 75$ mm $\alpha_2 = 60°$
    $r_3 = 85$ mm $\alpha_3 = 50°$
    The angular displacements of the input link are $\theta_{12} = 40°$ and $\theta_{13} = 75°$.
17. Design a four-link mechanism to coordinate three positions of the input and the output links given by
    $\theta_1 = 25°$ $\varphi_1 = 30°$
    $\theta_2 = 35°$ $\varphi_2 = 40°$
    $\theta_3 = 50°$ $\varphi_3 = 60°$ (5.6, 0.17, 4.88, 1)
18. Design a four-link mechanism when the motions of the input and the output links are governed by the function $y = 2x^2$ and x varies from 2 to 4 with an interval of 1. Assume θ to vary from 40° to 120° and ϕ from 60° to 132°. (1.73, 0.70, 1.78, 1.00)
19. Design a four-link mechanism to coordinate the motions of the input and the output links governed by a function $y = 2 \log x$ for $2 < x < 12$. Take $\Delta x = 1$. Assume suitable ranges for θ and φ.
20. Design a four-link mechanism if the motions of the input and the output links are governed by a function $y = x^{1.5}$ and x varies from 1 to 4. Assume θ to vary from 30° to 120° and φ from 60° to 130°. The length of the fixed link is 30 mm. Use Chebychev spacing of accuracy points.
21. Design a four-link mechanism to guide a rigid body through three positions of the input link with three positions of the coupler point, the data for which is given below:
    $\theta_1 = 40°$ $r_1 = 90$ mm $\alpha_1 = 78°$
    $\theta_2 = 55°$ $r_2 = 40$ mm $\alpha_2 = 90°$
    $\theta_3 = 70°$ $r_3 = 75$ mm $\alpha_3 = 95°$
22. Design a four-link mechanism, the coupler point of which traces a coupler curve that is approximated by ten positions given by the following data
    $\theta_1 = 160°$ $r_1 = 57$ mm $\alpha_1 = 70°$
    $\theta_2 = 130°$ $r_2 = 76$ mm $\alpha_2 = 65°$
    $\theta_3 = 98°$ $r_3 = 88$ mm $\alpha_3 = 55°$
    $\theta_4 = 73°$ $r_4 = 98$ mm $\alpha_4 = 45°$
    $\theta_5 = 32°$ $r_5 = 92$ mm $\alpha_5 = 30°$
    $\theta_6 = -15°$ $r_6 = 89$ mm $\alpha_6 = 20°$
    $\theta_7 = -25°$ $r_7 = 82$ mm $\alpha_7 = 19°$
    $\theta_8 = -70°$ $r_8 = 53$ mm $\alpha_8 = 25°$
    $\theta_9 = -125°$ $r_9 = 38$ mm $\alpha_9 = 50°$
    $\theta_{10} = -165°$ $r_{10} = 42$ mm $\alpha_{10} = 70°$

6 LOWER PAIRS

Introduction

In the chapter of mechanisms and machines, basic mechanisms with their inversions were introduced. In this chapter, some more mechanisms of the lower pair category will be discussed. Lower pairs usually comprise turning (pivoted) and sliding pairs. Mechanisms with pivoted links are widely used in machines and the required movements of links are produced by using them in a variety of forms and methods. In this chapter, some of the more common mechanisms will be studied. Pantographs are used to copy the curves on reduced or enlarged scales. Some pivoted-link mechanisms are used to guide reciprocating parts either exactly or approximately in straight paths to eliminate the friction of the straight guides of the sliding pairs. However, these days, sliders are also being used to get linear motions.

An exact straight-line mechanism guides a reciprocating part in an exact straight line. On the other hand, an approximate straight-line mechanism is designed in such a way that the middle and the two extreme positions of the guided point are in a straight line and the intermediate positions deviate as little as possible from the line.

Although this chapter will be restricted to the more elementary aspects of the analysis of mechanisms, the possibilities of their use in the mechanisms and the machine of daily use can easily be glimpsed. Moreover, systematic design techniques are being developed so that these mechanisms can be used for accurate control of the processes and the machines being needed in modern technology.

6.1 PANTOGRAPH

A pantograph is a four-bar linkage used to produce paths exactly similar to the ones traced out by a point on the linkage. The paths so produced are, usually, on an enlarged or reduced scale and may be straight or curved ones.

The four links of a pantograph are arranged in such a way that a parallelogram $ABCD$ is formed (Fig. 6.1). Thus, $AB = DC$ and $BC = AD$. If some point O in one of the links is made fixed and three other points P, Q and R on the other three links are located in such a way that $OPQR$ is a straight line, it can be shown that the points P, Q and R always move parallel and similar to each other over any path, straight or curved. Their motions will be proportional to their distances from the fixed point.

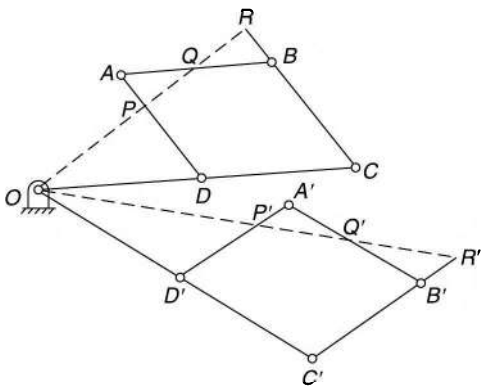

Fig. 6.1

Let O, P, Q and R lie on links CD, DA, AB and BC respectively. $ABCD$ is the initial assumed positions as shown in the figure.

Let the linkage be moved to another position so that A moves to A', B to B', and so on.

In ΔODP and OCR,

O, P and R lie on a straight line and thus OP and OR coincide.

$\angle DOP = \angle COR$ (common angle)

$\angle ODP = \angle OCR$ ($\because DP \mid\mid CR$)

Therefore, the Δs are similar and

$$\frac{OD}{OC} = \frac{OP}{OR} = \frac{DP}{CR} \quad \text{(i)}$$

Now, $A'B' = AB = DC = D'C'$

And $B'C' = BC = AD = A'D'$

Therefore, $A'B'C'D'$ is again a parallelogram.

In Δs $OD'P'$ and $OC'R'$,

$$\frac{OD'}{OC'} = \frac{OD}{OC} = \frac{DP}{CR} \quad \text{[from (i)]}$$

$$= \frac{D'P'}{C'R'}$$

and,

$\angle OD'P' = \angle OC'R'$ ($D'P' \parallel C'B'$ as $A'B'C'D'$ is a $\parallel$ gm)

Thus, the $\angle s$ are similar.

$\therefore \quad \angle D'OP' = \angle C'OR'$

or O, P' and R' lie on a straight line.

Now

$$\frac{OP}{OR} = \frac{OD}{OC} \quad \text{[from (i)]}$$

$$= \frac{OD'}{OC'}$$

$$= \frac{OP'}{OR'} \quad (\because \Delta s\ OD'P' \text{ and } OC'R' \text{ are similar})$$

This shows that as the linkage is moved, the ratio of the distances of P and R from the fixed point remains the same, or the two points are displaced proportional to their distances from the fixed point. This will be true for all the positions of the links. Thus, P and R will trace exactly similar paths.

Similarly, it can also be proved that P and Q trace similar paths. Thus, P, Q and R trace similar paths when the linkage is given motion.

6.2 STRAIGHT-LINE MECHANISMS

1. Paucellier Mechanism

A Paucellier mechanism consists of eight links (Fig. 6.2) such that,

$$OA = OQ; \qquad AB = AC$$

and $$BP = PC = CQ = QB$$

OA is the fixed link and OQ is a rotating link. It can be proved that as the link OQ moves around O, P moves in a straight line perpendicular to OA. All the joints are pin-jointed.

Since $BPCQ$ is a rhombus,

QP always bisects the angle BQC,

i.e.,

$$\angle 1 = \angle 2 \qquad \text{(i)}$$

in all the positions

Also, in Δs AQC and AQB,

AQ is common,

$AC = AB$

$QC = QB$

$\therefore$ Δs are congruent in all positions.

or $$\angle 3 = \angle 4 \qquad \text{(ii)}$$

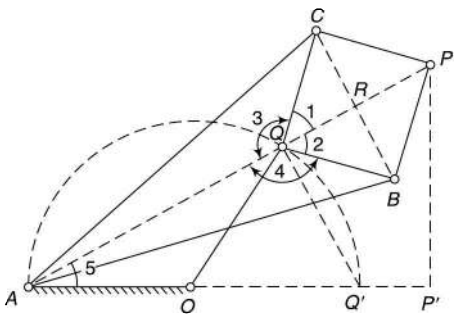

Fig. 6.2

Adding (i) and (ii),

$\angle 1 + \angle 3 = \angle 2 + \angle 4$

But $\angle 1 + \angle 2 + \angle 3 + \angle 4 = 360^\circ$

$\therefore$ $\angle 1 + \angle 3 = \angle 2 + \angle 4 = 180^\circ$

or A, Q and P lie on a straight line.

Let PP' be the perpendicular on AO produced.

Δs AQQ' and APP' are similar because $\angle 5$ is common and $\angle AQQ' = \angle AP'P = 90^\circ$

$$\therefore \qquad \frac{AQ}{AP'} = \frac{AQ'}{AP}$$

or $$\begin{aligned} AQ'.AP' &= (AQ)\,(AP) \\ &= (AR - RQ)\,(AR + RP) \\ &= (AR - RQ)\,(AR + RQ) \qquad \ldots (RP = RQ) \\ &= (AR)^2 - (RQ)^2 \\ &= [(AC)^2 - (CR)^2) - [(CQ)^2 - (CR)^2] \end{aligned}$$

or $$AP' = \frac{(AC)^2 - (CQ)^2}{AQ'}$$

$= $ constant, as AC, CQ and AQ' are always fixed

This means that the projection of P and AQ produced is constant for all the configurations.

Thus, PP' is always a normal to AO produced or P moves in a straight line perpendicular to AO.

Example 6.1 *Figure 6.3(a) shows the link MAC which oscillates on a fixed centre A. Another link OQ oscillates on the centre O. The links AB and AC are equal. Also BP = PC = CQ = QB. Locate the position of O such that,*

(i) P moves in a straight line

(ii) P moves in a circle with centre A

(iii) P moves in a circle with centre at OA produced

(iv) P moves in a circle with centre O and Q moves in a straight line

(modify the lengths of links if necessary)

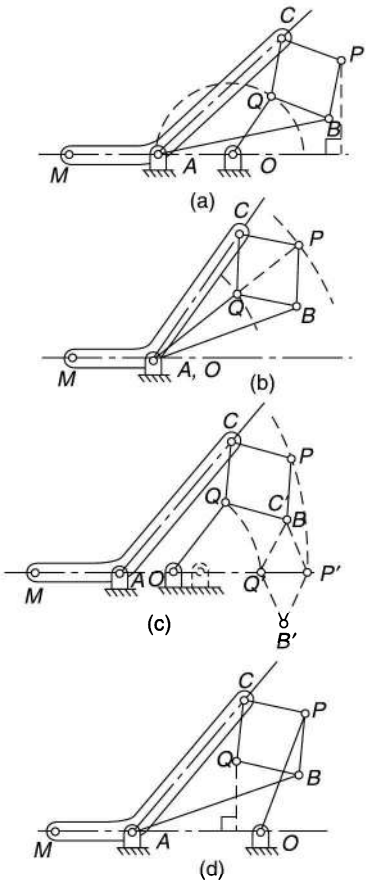

Fig. 6.3

Solution

(i) As in the Paucellier mechanism, O is located by drawing a straight line through A and perpendicular to the motion of P such that $AO = OQ$ [Fig. 6.3(a)].

(ii) If O is made to coincide with A, AQ would be equal to OQ. Thus, Q and P will be fixed on AP. Q will rotate about A and thus P will also rotate in a circle about A with AP as the radius [Fig. 6.3(b)].

(iii) From the above two cases, it can be observed that in (i) P moves in a circle with the centre at infinity on OA produced and in (ii) P moves in circle with the centre at A. Thus, if P is to move in a circle with the centre in-between A and infinity on OA produced, O must lie in-between O and A or in other words OQ should be greater than OA [Fig. 6.3(c)].

(iv) The mechanism will be similar to the Paucellier mechanism. P is to be joined with O by a link so that P moves in a circle about O and $OA = OP$. The lengths can be modified in two ways [Fig. 6.3(d)].

(a) OA is increased and OA and OP are made equal.

(b) Lengths AB and AC are reduced in such a way that $OA = OP$.

2. Hart Mechanism

A Hart mechanism consists of six links as shown in Fig. 6.4 such that

$$AB = CD; \quad AD = BC \quad \text{and } OE = OQ$$

OE is the fixed link and OQ, the rotating link. The links are arranged in such a way that $ABDC$ is a trapezium (AC parallel to BD). Pins E and Q on the links AB and AD respectively, and the point P on the link CB are located in such a way that

$$\frac{AE}{AB} = \frac{AQ}{AD} = \frac{CP}{CB} \qquad \text{(i)}$$

It can be shown that as OQ rotates about O, P moves in a line perpendicular to EO produced.

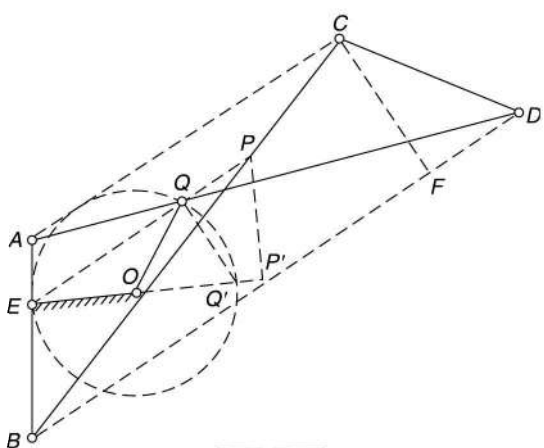

Fig. 6.4

In ΔABD $\dfrac{AE}{AB} = \dfrac{AQ}{AD}$ (Given)

Therefore, EQ is parallel to BD and thus parallel to AC.

In ΔABC $\dfrac{AE}{AB} = \dfrac{CP}{CB}$ (Given)

Therefore, EP is parallel to AC and thus parallel to BD.

Now, EQ and EP are both parallel to AC and BD and have a point E in common; therefore, EQP is a straight line.

Δs AEQ and ABD are similar ($\because$ $EQ \parallel BD$).

$$\therefore \quad \frac{EQ}{BD} = \frac{AE}{AB} \text{ or } EQ = BD \times \frac{AE}{AB} \tag{ii}$$

Δs BEP and BAC are similar ($\because$ $EP \parallel AC$).

$$\therefore \quad \frac{EP}{AC} = \frac{BE}{BA} \text{ or } EP = AC \times \frac{BE}{AB} \tag{iii}$$

Δs EQQ' and $EP'P$ are similar, because $\angle QEQ'$ or $\angle PEP'$ is common and $\angle EQQ' = \angle QP'P = 90°$.

$$\therefore \quad \frac{EQ}{EP'} = \frac{EQ'}{EP}$$

or $$EQ' \times EP' = EQ \times EP$$

$$= \left(BD \times \frac{AE}{AB}\right)\left(AC \times \frac{BE}{AB}\right) \quad \text{[from (ii) and (iii)]}$$

or

$$EP' = \frac{AE \times BE}{(EQ')(AB)^2}[(BD)(AC)]$$

$$= \frac{AE \times BE}{(EQ')(AB)^2}\left[(BF + FD)(BF - FD)\right]$$

$$= \frac{AE \times BE}{(EQ')(AB)^2}\left[(BF)^2 - (FD)^2\right]$$

$$= \frac{AE \times BE}{(EQ')(AB)^2}\left[\{(BC)^2 - (CF)^2\} - \{(CD)^2 - (CF)^2\}\right]$$

$$= \frac{AE \times BE}{(EQ')(AB)^2}\left[(BC)^2 - (CD)^2\right]$$

= constant, as all the parameters are fixed.

Thus, EP' is always constant. Therefore, the projection of P on EO produced is always the same point or P moves in a straight line perpendicular to EO.

Example 6.2 *A circle with EQ' as diameter has a point Q on its circumference. P is a point on EQ produced such that if Q turns about E, $EQ.EP$ is constant. Prove that the point P moves in a straight line perpendicular to EQ'.*

Solution Let PP' be perpendicular to EQ' produced (Fig. 6.5).

For any position of Q on the circumference of the circle with diameter EQ', Δs EQQ' and $EP'P$ are similar ($\angle QEQ'$ is common and $\angle EQQ' = \angle EP'P = 90°$).

$$\therefore \quad \frac{EQ}{EQ'} = \frac{EP'}{EP}$$

or $\quad EQ'.\ EP' = EQ.\ EP$

or $\quad EP' = \dfrac{EQ.EP}{EQ'}$

$= \text{constant, as } EQ' \text{ is fixed and } EQ.$

$EP = \text{constant}$

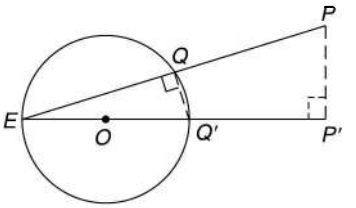

Fig. 6.5

Thus, EP' will be constant for all positions of Q. Therefore, the location of P' is fixed which means that P moves in a straight line perpendicular to EQ'.

3. Scott–Russel Mechanism

A Scott–Russel mechanism consists of three movable links; OQ, PS and slider S which moves along OS. OQ is the crank (Fig. 6.6). The links are connected in such a way that

$$QO = QP = QS$$

It can be proved that P moves in a straight line perpendicular to OS as the slider S moves along OS.

As $QO = QP = QS$, a circle can be drawn passing through O, P and S with PS as the diameter and Q as the centre.

Now, O lies on the circumference of the circle and PS is the diameter. Therefore, $\angle POS$ is a right angle. This is true for all the positions of S and is possible only if P moves in a straight line perpendicular to OS at O.

Note that in such a mechanism, the path of P is through the joint O which is not desirable. This can be avoided if the links are proportioned in a way that QS is the mean proportional between OQ and QP, i.e.,

$$\frac{OQ}{QS} = \frac{QS}{QP}$$

However, in this case P will approximately traverse a straight line perpendicular to OS and that also for small movements of S or for small values of the angle θ (Fig. 6.7). A mathematical proof of this, being not simple, is omitted here. However, by drawing the mechanism in a number of positions, the fact can be verified.

Usually, this is known as the *modified Scott–Russel mechanism.*

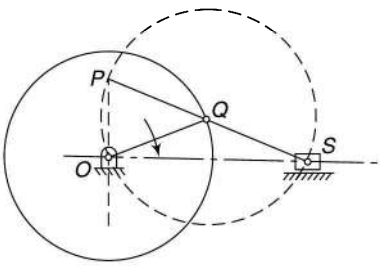

Fig. 6.6

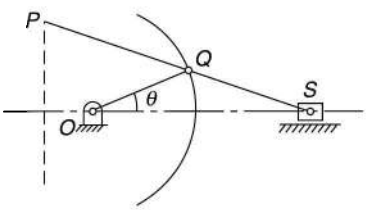

Fig. 6.7

4. Grass–Hopper Mechanism

This mechanism is a derivation of the modified Scott–Russel mechanism in which the sliding pair at S is replaced by a turning pair. This is achieved by replacing the slider with a link AS perpendicular to OS in the mean position. AS is pin-jointed at A (Fig. 6.8).

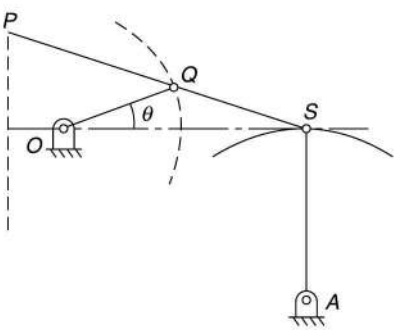

Fig. 6.8

If the length AS is large enough, S moves in an approximated straight line perpendicular to AS (or in line with OS) for small angular movements. P again will move in an approximate straight line if QS is the mean proportional between OQ and QP, i.e.,

$$\frac{OQ}{QS} = \frac{QS}{QP}$$

***Example* 6.3** *In a Grass–Hopper mechanism shown in Fig. 6.9, $OQ = 80$ mm, $SQ = 120$ mm and $SP = 300$ mm. Find the magnitude of the vertical force at P necessary to resist a torque of 100 N.m applied to the link OQ when it makes angles of 0°, 10° and 20° with the horizontal.*

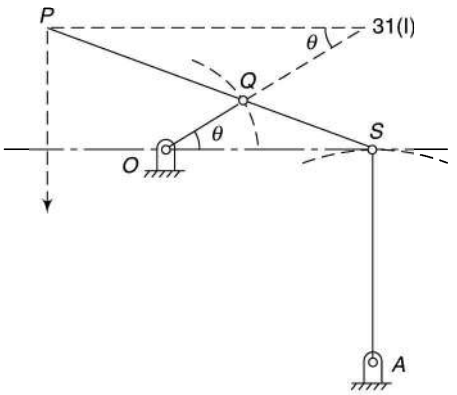

Fig. 6.9

Solution

$OQ = 80$ mm

$QS = 120$ mm

$QP = 300 - 120 = 180$ mm

$$\frac{OQ}{QS} = \frac{QS}{QP}, \text{ i.e., } \frac{80}{120} = \frac{120}{180}$$

As the condition for the dimensions of the Grass–Hopper mechanism is satisfied, P moves in an approximate straight line for small angles of OQ with the horizontal.

Now

$$F_p \times v_p = T_q \times \omega_q$$

$$F_p = \frac{T_p \omega_q}{v_p} = \frac{T_q}{v_p}\frac{v_q}{OQ} \qquad \text{(i)}$$

Locate the I-centre (instantaneous centre) of the link SP. It is at 31 as the directions of motions of points P and Q on it are known.

$$\frac{v_q}{v_p} = \frac{IQ}{IP} = \frac{OQ}{OS}$$

($\because$ Δs IQP and OQS are similar)

(i) becomes $F_p = \dfrac{T_q}{OS}$

When $\theta = 0°$, $OS = 80 + 120 = 200$ mm

$$F_p = \frac{100}{0.2} = 500 \text{ N}$$

When $\theta = 10°$,

$$OS = 80\cos 10° + \sqrt{(120)^2 - (80\sin 10°)^2}$$
$$= 198 \text{ mm}$$

$$F_p = \frac{100}{0.198} = \underline{505.05 \text{ N}}$$

When $\theta = 20°$,

$$OS = 80\cos 20° + \sqrt{(120)^2 - (80\sin 20°)^2}$$
$$= 192 \text{ mm}$$

$$F_p = \frac{100}{0.192} = \underline{520.8 \text{ N}}$$

As the angle θ increases, P moves in only approximate straight line and thus the calculations for F_p are not exact.

5. Watt Mechanism

It is a very simple mechanism. It has four links OQ, OA, QB and AB. OQ is the fixed link. Links OA and QB can oscillate about centres O and Q respectively. It is seen that if P is a point on the link AB such that $PA/PB = QB/OA$, then for small oscillations of OA and QB, P will trace an approximately straight line. This has been shown in Fig. 6.10 for three positions.

In earlier times, the mechanism was used by Watt to guide the piston, as it was difficult to machine plane surfaces.

6. Tchebicheff Mechanism

It consists of four links *OA, QB, AB* and *OQ* (fixed) as shown in Fig. 6.11. The links *OA* and *QB* are equal and crossed. *P*, the mid-point of *AB*, is the tracing point. The proportions of the links are taken in such a way that *P*, *A* and *B* lie on vertical lines when on extreme positions, i.e., when directly above *O* or *Q*.

Let $AB = 1$ unit

$OA = QB = x$ units

and $OQ = y$ units

When *AB* is on the extreme left position, *A* and *B* assume the positions *A′* and *B′*, respectively.

In $\Delta OQB'$,

$$(QB')^2 - (OQ)^2 = (OB')^2$$

$$(QB)^2 - (OQ)^2 = (OB')^2 \qquad (OB' = OB)$$

$$x^2 - y^2 = (OA' - A'B')^2$$

$$= (x-1)^2$$

$$= x^2 - 2x + 1$$

or $2x - 1 = y^2$

$$x = \frac{y^2+1}{2} \qquad \text{(i)}$$

In ΔOAC,

$$(OA)^2 - (AC)^2 = (OC)^2$$

$$(OA)^2 - (OP')^2 = (AP')^2$$

$$(OA)^2 - (OA' - A'P')^2 = (PP' + AP)^2$$

$$x^2 - \left(x - \frac{1}{2}\right)^2 = \left(\frac{y}{2} + \frac{1}{2}\right)^2$$

or $$x^2 - \left(x^2 + \frac{1}{4} - x\right) = \frac{y^2}{4} + \frac{1}{4} + \frac{y}{2}$$

$$x = \frac{y^2}{4} + \frac{y}{2} + \frac{1}{2} \qquad \text{(ii)}$$

From Eqs (i) and (ii),

$$\frac{y^2}{2} + \frac{1}{2} = \frac{y^2}{4} + \frac{y}{2} + \frac{1}{2}$$

$$\frac{y^2}{4} = \frac{y}{2}$$

or $y = 2$

and $$x = \frac{y^2+1}{2} = 2.5$$

Thus, *AB*: *OQ*: *OA* = 1:2:2.5

This ratio of the links ensures that *P* moves approximately in a horizontal straight line parallel to *OQ*.

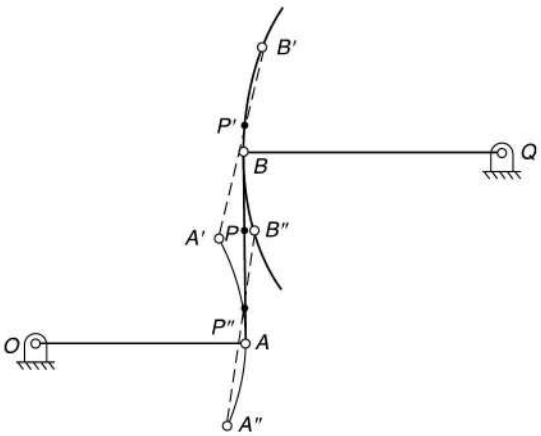

Fig. 6.10

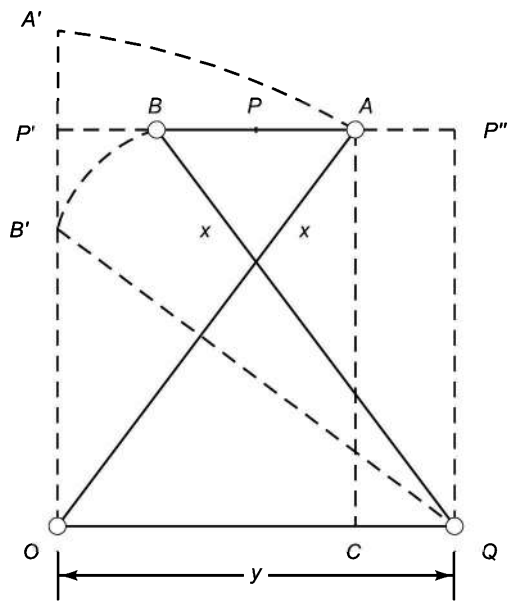

Fig. 6.11

7. Kempe's Mechanism

This mechanism consists of two identical mechanisms *ABCDEF* and *A′B′C′D′EF′*. All pairs are turning pairs as shown in Fig. 6.12.

The ratios of the links are

$AF = AC = 2(EC = ED = EF)$
$= 4(BD = BC)$

and

$A'F' = A'C' = 2(EC' = ED' = EF') = 4(B'D' = B'C')$

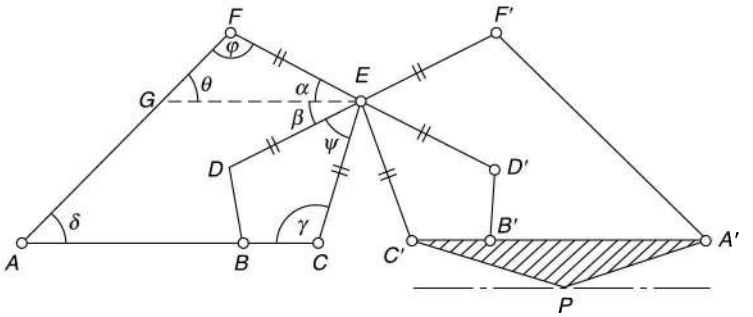

Fig. 6.12

Links *DEF′* and *D′EF* are rigid links having turning pairs at *E* and at the ends.

It can be proved that if *ABC* is a fixed horizontal link, *A′B′C′* also remains horizontal (in line with *ABC*) and thus any point on the link such as *P* will move in a horizontal straight line.

Quadrilaterals *ACEF* and *EDBC* are similar because,

$$\frac{AC}{ED} = \frac{CE}{DB} = \frac{EF}{BC} = \frac{FA}{CE} = 2$$

and $\angle\varphi = \angle\gamma$

(angles between corresponding sides when two pairs of adjacent sides are equal in the quadrilateral *ACEF*)

$\therefore$ $\angle\delta = \angle\psi$ (corresponding angles of two quadrilaterals)

Draw $EG \parallel CA$

In $\Delta\, EFG$,

$\angle\alpha + \angle\varphi + \angle\theta = \pi$

or $\angle\alpha = \pi - \angle\varphi - \angle\theta$

$= \pi - \angle\varphi - \angle\delta$ ($\because EG \parallel CA$)

$= \pi - \angle\gamma - \angle\psi$ (i)

But as *CE* cuts *EG* and *CA*, two parallel lines,

$\angle\gamma + \angle\psi + \angle\beta = \pi$

or $\angle\gamma = \pi - \angle\psi - \angle\beta$

$\therefore$ from (i) $\angle\alpha = \pi - (\pi - \angle\psi - \angle\beta) - \angle\psi$

$= \angle\beta$

Thus, for all configurations, $\angle\alpha = \angle\beta$, i.e., inclination of *ED* and *EF* is same to *EG* or *CA* and the two identical parts of the mechanism always remain symmetrical.

Hence, if *ABC* is a fixed horizontal link, *A′B′C′* also remains horizontal in line with *ABC* and any point *P* on it traces a horizontal path.

8. Parallel Linkages

If the opposite links of a four-link mechanism are made equal, the linkage will always form a parallelogram. The following types of parallel linkages are used universally.

Parallel Ruler As shown in Fig. 6.13, in a parallel ruler, all the horizontal links have the same length, i.e.,

$$AB = CD = EF = GH = IJ$$

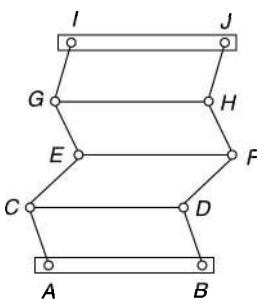

Fig. 6.13

The lengths of the opposite links of each parallelogram should also be equal, i.e.,

$$AC = BD,\ CE = DF,\ EG = FH \text{ and } GI = HJ$$

It can be seen that any number of parallelograms can be used to form this ruler. The dimensions of the mechanism ensure that IJ moves parallel to AB.

Lazy Tongs In this mechanism (Fig. 6.14), O is pin-jointed and is a fixed point. The point A slides in the vertical guides while all other points are pin-jointed. All the links are of equal length. As A moves vertically, P will move in an approximate horizontal line. The use of such a mechanism can be made in supporting a bulb (of a table lamp) or telephone, etc.

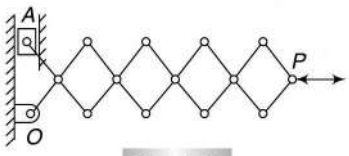

Fig. 6.14

Universal Drafting Machine In such a mechanism (Fig. 6.15), two parallelograms of the links are formed.

$$AB = CD \qquad \text{and} \qquad AC = BD$$

The link AB is fixed.

As $ABDC$ is a parallelogram, CD always remains parallel to AB. C and D are pin-jointed to a disc D_1. Thus, the disc D_1 can have translatory motion in a plane but not angular motions.

EF is another link on the disc D_1 pin-jointed at the ends E and F. As the orientation of the disc D_1 is fixed, the direction of EF is also fixed.

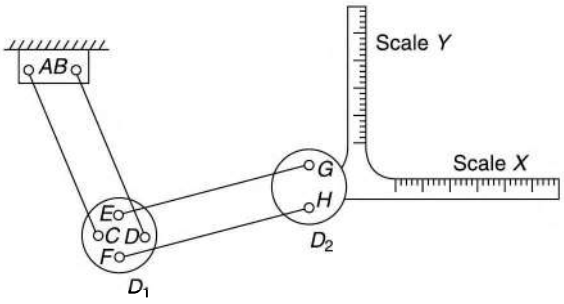

Fig. 6.15

Also,

$$EG = FH \qquad \text{and} \qquad EF = GH$$

Thus, the direction of GH is always parallel to EF or there is no angular movement of the disc D_2. Therefore, scales X and Y will always be along the horizontal and the vertical directions.

A universal drafting machine is extensively used as a substitute for T-square and set-square.

6.3 ENGINE INDICATORS

An *indicator* of a reciprocating engine is an instrument that keeps the graphical record of pressure inside the cylinder during the piston stroke.

An indicator consists of an *indicator cylinder* with a *piston*. The indicator cylinder is connected to the engine cylinder. Thus, varying pressure of the gas or steam is communicated to the indicator piston, the displacement of which is constrained by a spring to get a direct measure of the gas or the steam pressure. The displacement is recorded by a pencil on paper, wrapped on a drum, to a suitable scale with the help of a straight-line mechanism.

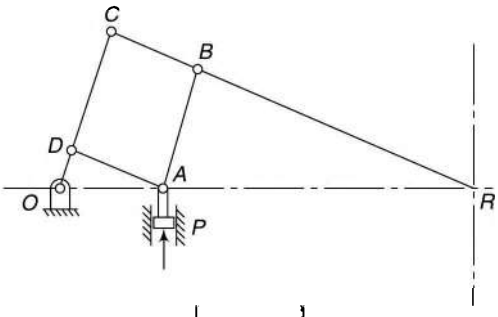

Fig. 6.16

The following are the usual types of indicators:

1. Simplex Indicator

This indicator employs the mechanism of a pantograph. As shown in Fig. 6.16, O is the fixed pivot whereas $ABCD$ is a parallelogram formed by the four links. R is a point on the link CB produced to trace the path of A or P (movement of piston). Also, refer to Fig. 6.1.

P moves in a vertical straight line within the guides or the indicator cylinder. Its movement is controlled by the steam or the gas pressure to be measured. Thus, R also moves in a vertical straight line recording the variation of pressure with the help of a pencil recorder.

***Example* 6.4** *Design a pantograph for an indicator to be used to obtain the indicator diagram of an engine. The distance between the fixed point and the tracing point is 180 mm. The indicator diagram should be three times the gas pressure inside the cylinder of the engine.*

Solution

Refer Fig. 6.16,

$$OR = 180 \text{ mm and } \frac{OR}{OA} = 3 \text{ (given)}$$

or $$\frac{180}{OA} = 3$$

or $$OA = 60 \text{ mm}$$

The relationship of the different arms of a simplex indicator is as follows:

$$\frac{OR}{OA} = \frac{OC}{OD} = \frac{CR}{CB} = 3$$

Choose convenient dimensions of OD and DA. Let these be 30 mm and 50 mm respectively.

Thus, as $ABCD$ is to be a parallelogram and the above relation is to be fulfilled, the other dimensions will be

$$OC = 30 \times 3 = 90 \text{ mm}$$
$$CR = 50 \times 3 = 150 \text{ mm}$$

Construct the diagram as follows:

1. Locate D by making arcs of radii 30 mm and 50 mm with centres O and A respectively.
2. Produce OD to C such that $OC = 90$ mm.
3. Join CR.
4. Draw AB parallel to OC.

Thus, the required pantograph is obtained.

2. Crosby Indicator

This indicator employs a modified form of the pantograph. The mechanism has been shown in Fig. 6.17.

To have a vertical straight line motion of R, it must remain in line with O and P, and also the links OC and PB must remain approximately parallel.

As P lies on the link 3 and R on 5, locate the I-centres 31 and 51. If the directions of velocities of any two points on a link are known, the I-centre can be located easily which is the intersection of the perpendiculars to the directions of velocities at the two points.

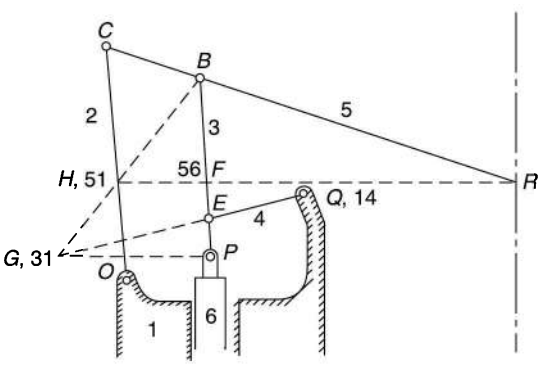

Fig. 6.17

First, locate 31 as the directions of velocities of P and E on the link 3 are known.

- The direction of velocity of P is vertical. Therefore, 31 lies on a horizontal line through P.
- The direction of velocity of E is perpendicular to QE. Therefore, 31 lies on QE (or QE produced).

The intersection of QE produced with the horizontal line through P locates the point 31.

Thus, the link 3 has its centre of rotation at 31 (link 1 is fixed) and the velocity of any point on the link is proportional to its distance from 31, the direction being perpendicular to a line joining the point with the I-centre.

To locate 51, the directions of velocities of B and C are known.

- The direction of velocity of B is $\perp$ to $31-B$. Therefore, 51 lies on $31-B$.
- The direction of velocity of C is $\perp$ to OC. Therefore, 51 lies on OC.

Thus, 51 can be located.

Now, the link 5 has its centre of rotation at 51. The direction of velocity of the point R on this link will be perpendicular to 51-R. To have a vertical motion of R, it must lie on a horizontal line through 51.

The ratio of the velocities of R and P is given by,

$$\frac{v_r}{v_p} = \frac{v_r}{v_b}\frac{v_b}{v_p} \qquad (B \text{ is common to 3 and 5})$$

$$= \frac{51-R}{51-B}\cdot\frac{31-B}{31-P}$$

$$= \frac{51-R}{51-B}\cdot\frac{51-B}{51-F} \qquad (\because \Delta\text{s } BPG \text{ and } BFH \text{ are similar})$$

$$= \frac{51-R}{51-F}$$

$$= \frac{CR}{CB} \qquad (\because \Delta\text{s } CRH \text{ and } BRF \text{ are similar})$$

$$= \text{constant}$$

This shows that the velocity or the displacement of R will be proportional to that of P.

Alternatively, locate the I-centre 56 by using Kennedy's theorem. It will be at the point F (the intersection of lines joining I-centres 16, 15 and 35, 36, not shown in the figure).

First, consider this point 56 to lie on the link 6. Its absolute velocity is the velocity of 6 in the vertical direction (1 being fixed).

Now, consider the point 56 to lie on the link 5. The motion of 5 is that of rotation about 51 (1 being fixed). Thus, velocity of R on the link 5 can be found as the velocity of 56, another point on the same link is known.

$$\frac{v_r}{v_f} = \frac{51-R}{51-F}$$

or

$$= \frac{51-R}{51-F} \qquad (v_f = v_p)$$

$$= \frac{CR}{CB}$$

3. Thomson Indicator

A Thomson indicator employs a Grass–Hopper mechanism $OCEQ$. R is the tracing point which lies on CE produced as shown in Fig. 6.18.

The best position of the tracing point R is obtained as discussed below:

Locate the I-centres 31 and 51 as in case of a Crosby indicator. The directions of velocities of two points C and E on the link 5 are known; therefore, first locate the I-centre 51.

- The direction of velocity of C is $\perp$ to OC. Therefore 51 lies on OC.
- The direction of velocity of E is $\perp$ to QE, Therefore, 51 lies on QE (or QE produced).

Thus, 51 can be located.

Now, the directions of velocities of two points B and P on the link 3 are known.

The direction of velocity of B is $\perp$ to 51-B, (B is on the link 5 also)

Therefore, 31 lies on the line 51-B.

The direction of velocity of P is vertical,

Therefore, 31 lies on a horizontal line through P.

Thus, 31 can be located.

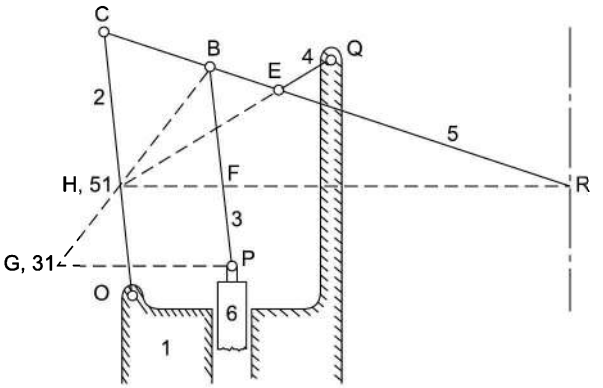

Fig. 6.18

As R is to move in a vertical direction, it must lie on a horizontal line through the I-centre of the link 5 on which the pointer lies.

Similar to the case of a Crosby indicator, the velocity ratio is given by,

$$\frac{v_r}{v_p} = \frac{CR}{CB} = \text{constant}$$

Therefore, the velocity or the displacement of R is proportional to that of P.

It is to be remembered that since OC and PB do not remain parallel for all positions, R moves in an approximate vertical line. However, the variations are negligible.

Alternatively, the I-centre 56 can be located by using Kennedy's theorem. It will be at the point F.

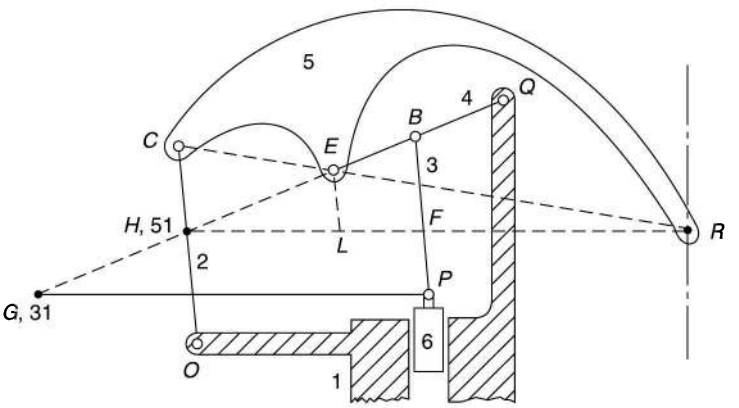

Fig. 6.19

4. Dobbie McInnes Indicator

This indicator is similar to a Thomson indicator, the difference being that the link 3 is pivoted to a point in the link 4 instead of a point on the link 5. Thus, the motion of the indicator piston is imparted to the link 4.

The indicator is shown in Fig. 6.19.

Locate the I-centre 31 as before.

Locate R by finding the intersection of CE and a horizontal line through 51.

Locate I-centre 31as usual.

Now

$$\frac{v_r}{v_p} = \frac{v_r}{v_e} \times \frac{v_e}{v_b} \times \frac{v_b}{v_p}$$

$$= \frac{51-R}{51-E} \cdot \frac{QE}{QB} \cdot \frac{31-B}{31-P}$$

$$= \frac{51-R}{51-E} \cdot \frac{QE}{QB} \cdot \frac{51-B}{51-F} \qquad (\because \text{ Δs } BPG \text{ and } BFH \text{ are similar})$$

$$= \frac{51-R}{51-E} \cdot \frac{QE}{QB} \cdot \frac{51-E}{51-L} \qquad (\because \text{ Δs } BFH \text{ and } ELH \text{ are similar})$$

$$= \frac{51-R}{51-L} \cdot \frac{QE}{QB}$$

$$= \frac{CR}{CE} \cdot \frac{QE}{QB}$$

= constant

This expression also gives approximately the ratio of the displacement of R to that of P.

6.4 AUTOMOBILE STEERING GEARS

When an automobile takes turns on a road, all the wheels should make concentric circles to ensure that they roll on the road smoothly and there is a line contact between the tyres and the surface of the path, preventing the excess wear of tyres. This is achieved by mounting the two front wheels on two short axles, known as *stub axles*. The stub axles are pin-jointed with the main front axle which is rigidly attached to the rear axle. Thus, the steering is affected by the use of front wheels only.

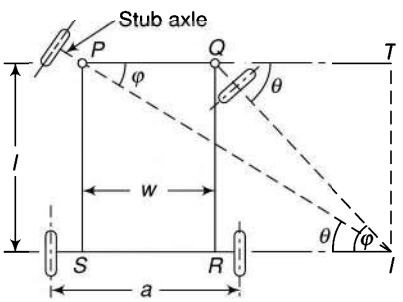

Fig. 6.20

When the vehicle is making a turn towards one side, the front wheel of that side must swing about the pin through a greater angle than the wheel of the other side. The ideal relation between the swings of the two wheels would be if the axes of the stub axles, when produced, intersect at a point I on the common axis of the two rear wheels Fig. (6.20). In that case, all the wheels of the vehicle will move about a vertical axis through I, minimizing the tendency of the wheels to skid. The point I is also the instantaneous centre of the motion of the four wheels.

Let θ and φ = angles turned by the stub axles

l = wheel base

w = distance between the pivots of front axles

Then,

$$\cot\varphi = \frac{PT}{Tl} \text{ and } \cot\theta = \frac{QT}{Tl}$$

$$\cot\varphi - \cot\theta = \frac{PT - QT}{Tl} = \frac{PQ}{Tl} = \frac{w}{l} \qquad (6.1)$$

This is known as the *fundamental equation of correct gearing*. Mechanisms that fulfil this fundamental equation are known as *steering gears*.

6.5 TYPES OF STEERING GEARS

There are two main types of steering gears:

1. Davis steering gear
2. Ackermann steering gear

A *Davis steering gear* has sliding pairs which means more friction and easy wearing. The gear fulfils the fundamental equation of gearing in all the positions. However, due to easy wearing it becomes inaccurate after some time.

An *Ackermann steering gear* has only turning pairs and thus is preferred. Its drawback is that it fulfils the fundamental equation of correct gearing at the middle and the two extreme positions and not in all positions.

Davis Steering Gear

A Davis steering gear shown in Fig. 6.21(a) consists of two arms PK and QL fixed to the stub axles PC and QD to form two similar bell-crank levers CPK and DQL pivoted at P and Q respectively. A cross link or track arm AB, constrained to slide parallel to PQ, is pin-jointed at its ends to two sliders. The sliders S_1 and S_2 are free to slide on the links PK and QL respectively.

During the straight motion of the vehicle, the gear is in the mid-position with equal inclination of the arms PK and QL with PQ.

As the vehicle turns right, the cross-arm AB also moves right through a distance x from the mid-position as shown in Fig.6.21(b). The bell-crank levers assume the positions $C'PK'$ and $D'QL'$.

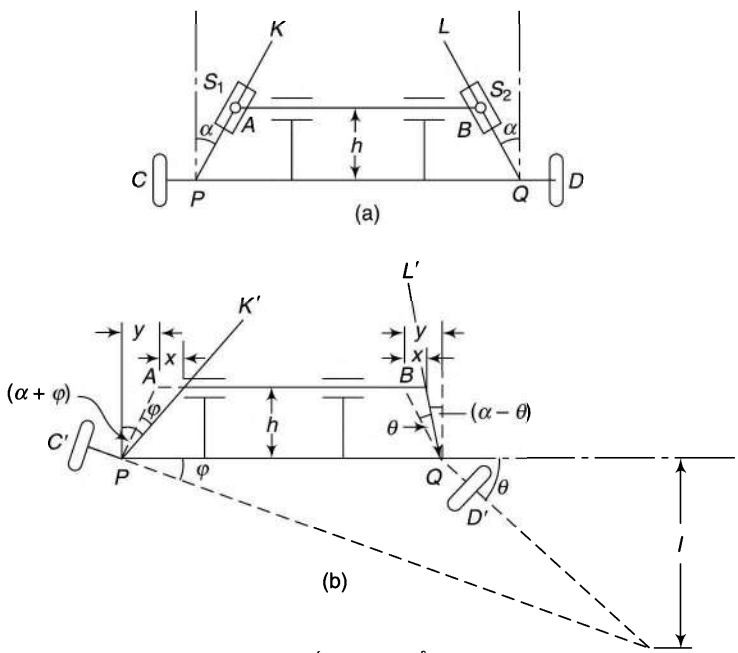

Fig. 6.21

Let h = vertical distance between AB and PQ

$$\tan(\alpha - \theta) = \frac{y - x}{h}$$

$$\frac{\tan\alpha - \tan\theta}{1 + \tan\alpha\tan\theta} = \frac{y - x}{h}$$

$$\frac{\frac{y}{h} - \tan\theta}{1 + \frac{y}{h}\tan\theta} = \frac{y - x}{h} \qquad \left(\tan\alpha = \frac{y}{h}\right)$$

$$\frac{y - h\tan\theta}{xh + y\tan\theta} = \frac{y - x}{h}$$

$$(y - h\tan\theta)h = (h + y\tan\theta)(y - x)$$

$$yh - h^2 \tan\theta = hy - hx + y^2 \tan\theta - xy \tan\theta$$

$$hx = (y^2 - xy + h^2) \tan\theta$$

$$\tan\theta = \frac{hx}{y^2 - xy + h^2}$$

Also, $\tan(\alpha + \varphi) = \dfrac{y + x}{h}$

and it can be proved that $\tan\varphi = \dfrac{hx}{y^2 + xy + h^2}$

For correct steering action, $\cot\varphi - \cot\theta = \dfrac{w}{l}$

or
$$\frac{y^2 + xy + h^2}{hx} - \frac{y^2 - xy + h^2}{hx} = \frac{w}{l}$$

or
$$\frac{2xy}{hx} = \frac{w}{l}$$

or
$$\frac{y}{h} = \frac{w}{2l}$$

or
$$\tan\alpha = \frac{w}{2l} \tag{6.2}$$

The usual value of w/l is between 0.4 to 0.5 and that of α from 11 or 14 degrees.

Example 6.5 *The ratio between the width of the front axle and that of the wheel base of a steering mechanism is 0.44. At the instant when the front inner wheel is turned by 18°, what should be the angle turned by the outer front wheel for perfect steering?*

Solution

$w/l = 0.44 \qquad \theta = 18°$

As $\cot\varphi - \cot\theta = \dfrac{w}{l}$

$\therefore \quad \cot\varphi - \cot 18° = 0.44$

$\cot\phi = 0.44 + 3.078 = 3.518$

or $\phi = \underline{15.9°}$

Example 6.6 *The distance between the steering pivots of a Davis steering gear is 1.3 m. The wheel base is 2.75 m. What will be the inclination of the track arms to the longitudinal axis of the vehicle if it is moving in a straight path?*

Solution

$w = 1.3$ m $\qquad l = 2.75$ m

$$\tan\alpha = \frac{w}{2l} = \frac{1.3}{2 \times 2.75} = 0.236$$

$\therefore \quad \alpha = 13.3°$ or $13° 18'$

Example 6.7 *The track arm of a Davis steering gear is at a distance of 192 mm from the front main axle whereas the difference between their lengths is 96 mm. If the distance between steering pivots of the main axle is 1.4 m, determine the length of the chassis between the front and the rear wheels. Also, find the inclination of the track arms to the longitudinal axis of the vehicle.*

Solution

$w = 1.4$ m $\quad h = 192$ mm $\quad y = 96/2 = 48$ mm

$$\tan\alpha = \frac{y}{h} = \frac{48}{192} = 0.25$$

$\therefore \quad \alpha = \underline{14°}$

Also $\quad \tan\alpha = \dfrac{w}{2l}$

$\therefore \quad \tan 14° = \dfrac{1.4}{2l}$

or $\quad l = \underline{2.8 \text{ m}}$

Ackermann Steering Gear

This steering gear consists of a four-link mechanism *PABQ* having four turning pairs.

As shown in Fig. 6.22(a), two equal arms *PA* and *QB* are fixed to the stub axles *PC* and *QD* to form two similar bell-crank levers *CPA* and *DQB* pivoted at *P* and *Q* respectively. A cross link *AB* is pin-jointed at the ends to the two bell-crank levers.

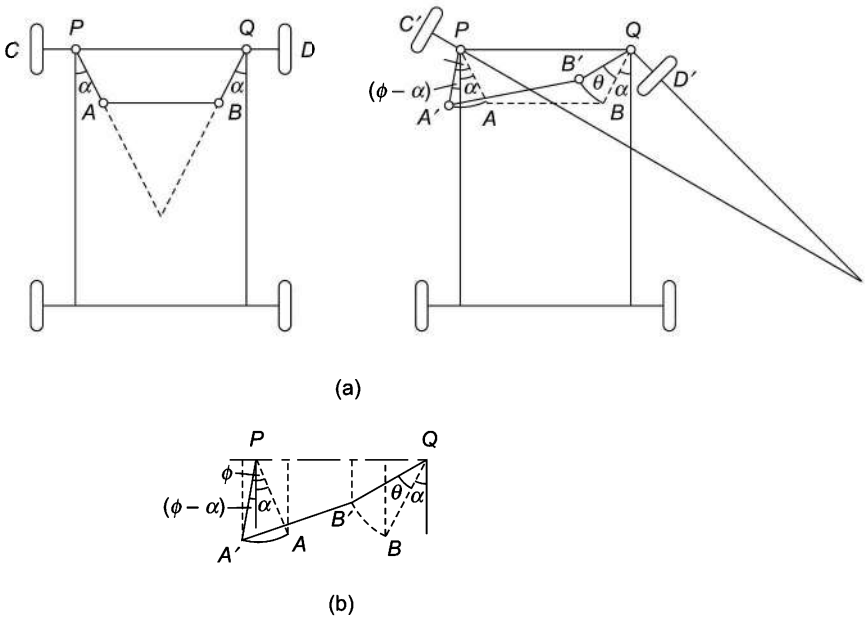

Fig. 6.22

During the straight motion of the vehicle, the gear is in the mid-position with equal inclination of the arms *PA* and *QB* with *PQ*. The cross link *AB* is parallel to *PQ* in this position.

An Ackermann gear does not fulfil the fundamental equation of correct gearing in all the positions but only in three positions. If the values of *PA, PQ* and the angle α are known, the mechanism can be drawn to a suitable scale in different positions. The angle ϕ can be noted for different values of θ. This angle ϕ found by drawing the gear may be termed as φ_a (φ actual).

Correct or theoretical values of φ corresponding to different values of θ, for the given values of w and l can be calculated from the relation for correct gearing, $\cot\varphi - \cot\theta = w/l$. The angle so obtained may be termed as φ_t (φ theoretical).

Comparing φ_a and φ_t, following observations are made:

1. For small values of θ, φ_a is marginally higher than φ_t
2. For larger values of θ, φ_a is lower than φ_t and the difference is substantial.

Thus, for larger values of θ or when the vehicle is taking a sharp turn, the wear of the tyres can be more due to slipping. However, to take sharp turns, the vehicle has to be slowed down, which reduces the wear of the tyres. Thus, the large difference between φ_a and φ_t does not affect much the life of tyres.

In an Ackermann gear, the instantaneous centre *I* does not lie on the rear axis but on a line parallel to the rear axis at an approximate distance of $0.3l$ above it.

Three positions of correct gearing are

1. when the vehicle moves straight,
2. when the vehicle moves at a correct angle to the right, and
3. when the vehicle moves at a correct angle to the left.

In all other positions, pure rolling is not possible due to slipping of the wheel.

Graphically, the two positions of the correct gearing are found by finding ($\cot\varphi - \cot\theta$) at different positions. The values that give the correct values of w/l ($w/l \approx 0.45$) correspond to correct gearing.

Determination of Angle α As mentioned above, if the values of PA, PQ and the angle α are known, the mechanism can be drawn to a suitable scale in different positions and the actual angle ϕ can be noted for different values of θ. The values of θ and ϕ matching with theoretical values provides the position of the vehicle for correct steering on the left and right. However, for initial design of the steering, usually angle α is obtained by assuming the steering in a position in which the projections of AB and $A'B'$ on PQ are equal [Fig.6.22(b)],

i.e.,

$$\text{Projection of } BB' \text{ on } PQ = \text{Projection of } AA' \text{ on } PQ$$

$$QB\,[\sin(\alpha+\theta) - \sin\alpha] = PA\,[\sin\alpha + \sin(\varphi - \alpha)]$$

or

$$\sin(\alpha+\theta) - \sin\alpha = \sin\alpha + \sin(\varphi - \alpha) \qquad (PA = QB)$$

$$(\sin\alpha\cos\theta + \cos\alpha\sin\theta) - \sin\alpha = \sin\alpha + \sin\varphi\cos\alpha - \cos\varphi\sin\alpha$$

$$\sin\alpha(\cos\theta + \cos\varphi - 2) = \cos\alpha(\sin\varphi - \sin\theta)$$

$$\frac{\sin\alpha}{\cos\alpha} = \frac{\sin\varphi - \sin\theta}{\cos\theta + \cos\varphi - 2}$$

$$\tan\alpha = \frac{\sin\varphi - \sin\theta}{\cos\theta + \cos\varphi - 2} \qquad (6.3)$$

where θ and φ are the values of angles for the correct gearing.

6.6 HOOKE'S JOINT

A Hooke's joint (Fig. 6.23), commonly known as a *universal joint*, is used to connect two non-parallel and intersecting shafts. It is also used for shafts with angular misalignment. A common application of this joint is in an automobile where it is used to transmit power from the gear box (of the engine) to the rear axle. The driving shaft rotates at a uniform angular speed whereas the driven shaft rotates at a continuously varying angular speed.

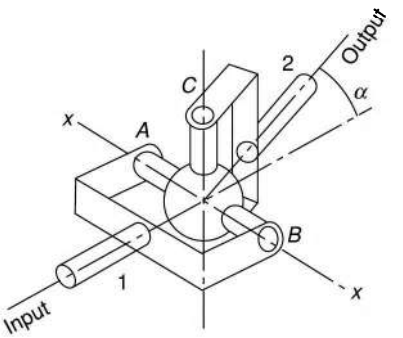

Fig. 6.23

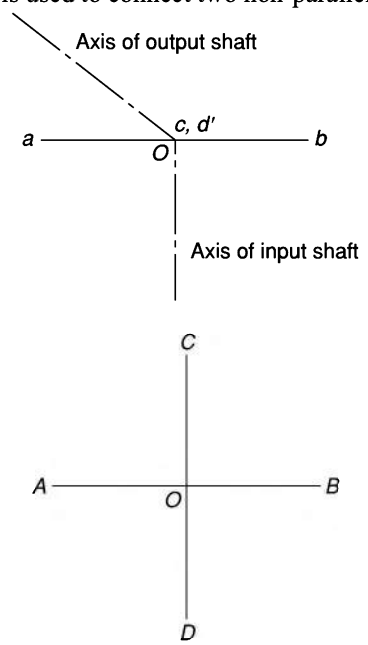

Fig. 6.24

The shafts 1 and 2 rotate in the fixed bearings. A complete revolution of either shaft will cause the other to rotate through a complete revolution in the same time, but with varying angular speed. Each shaft has a fork at its end. The four ends of the two forks are connected by a centre piece, the arms of which rest in the bearings, provided in the forks ends. The centre piece can be in the shape of a *cross, square* or *sphere* (having four pins or arms). The four arms of the cross are at right angles.

Let two horizontal shafts, the axes of which are at an angle α, be connected by a Hooke's joint. If the joint is viewed along the axis of the shaft 1, the fork ends of this shaft will be A and B as shown in Fig. 6.24. C and D are the positions assumed by the fork ends of the shaft 2. The

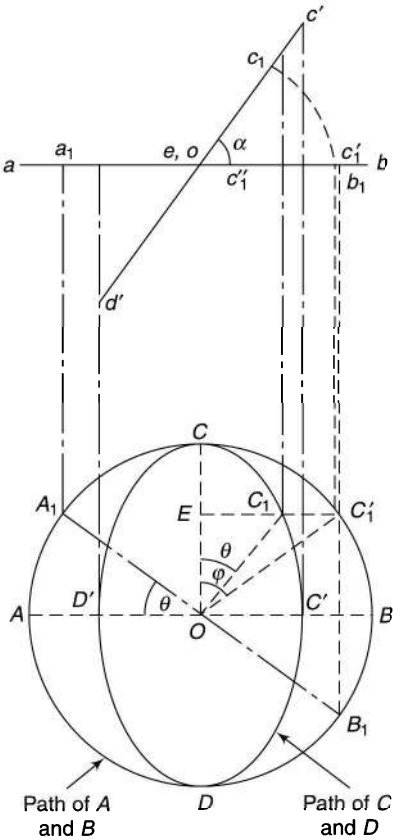

Fig. 6.25

axis of the shaft 1 is along the perpendicular to the plane of paper at O and that of the shaft 2 along OA. When viewed from top, c and d, projections of C and D coincide with that of O whereas a and b remain unchanged.

As the shaft 1 is rotated, its fork ends A and B, are rotated in a circle (Fig. 6.25). However, the fork ends C and D of the shaft 2 will move along the path of an ellipse, if viewed along the axis of the shaft 1. In the top view, the motion of the fork ends of the shaft 1 is along the line ab whereas that of the shaft 2 on a line $c'd'$ at an angle of α to ab.

Let the shaft 1 rotate through an angle θ so that fork ends assume the positions A_1 and B_1. Now, the angle moved by the shaft 2 would also be θ when viewing along the axis of the shaft 1. Let the fork end C take the position C_1. However, the true angle turned by the shaft 2 would be when it is viewed along its own axis. In Fig. 6.26, the front view of the joint is shown, when viewing along the axis of the shaft 2. Here, C and D move in a circle. The point C_1 lies on a circle at the same height as it is on the ellipse in Fig. 6.25. This gives the true angle φ turned by the shaft 2.

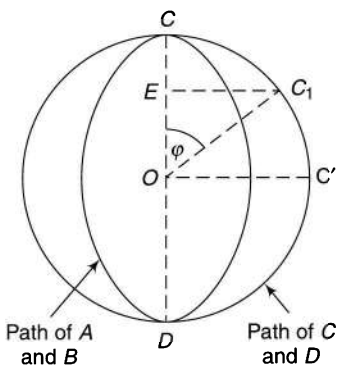

Fig. 6.26

Now,

$$\frac{\tan\varphi}{\tan\theta} = \frac{EC_1' / EO}{EC_1 / EO} \qquad \text{(Fig. 6.25)}$$

$$= \frac{EC_1'}{EC_1}$$

$$= \frac{ec_1'}{ec_1''} \qquad \text{(Fig. 6.25 top view)}$$

$$= \frac{ec_1}{ec_1''}$$

$$= \frac{1}{ec_1''/ ec_1}$$

$$= \frac{1}{\cos a}$$

or

$$\tan\theta = \cos\alpha \tan\varphi \qquad (6.4)$$

Angular Velocity Ratio

Let ω_1 = angular velocity of driving shaft $\left(= \dfrac{d\theta}{dt}\right)$

ω_2 = angular velocity of driving shaft $\left(= \dfrac{d\varphi}{dt}\right)$

Differentiating Eq. 6.4 with respect to time t,

$$\sec^2\theta \frac{d\theta}{dt} = \cos\alpha \sec^2\varphi \frac{d\varphi}{dt}$$

or

$$\frac{d\varphi / dt}{d\theta / dt} = \frac{\sec^2\theta}{\cos\alpha \sec^2\varphi}$$

$$\frac{\omega_2}{\omega_1} = \frac{1}{\cos^2\theta \cos\alpha\,(1+\tan^2\varphi)}$$

$$= \frac{1}{\cos^2\theta \cos\alpha \left(1+\dfrac{\tan^2\theta}{\cos^2\alpha}\right)} \ldots \qquad \left(\tan\varphi = \frac{\tan\theta}{\cos\alpha}\right)$$

$$= \frac{1}{\cos^2\theta \cos\alpha \left(1+\dfrac{\sin^2\theta}{\cos^2\theta\cos^2\alpha}\right)}$$

$$= \frac{\cos^2\theta\cos^2\alpha}{\cos^2\theta\cos\alpha\,(\cos^2\theta\cos^2\alpha+\sin^2\theta)}$$

$$= \frac{\cos\alpha}{\cos^2\theta\,(1-\sin^2\alpha)+\sin^2\theta}$$

$$= \frac{\cos\alpha}{\cos^2\theta-\cos^2\theta\sin^2\alpha+\sin^2\theta}$$

$$= \frac{\cos\alpha}{1-\sin^2\alpha\cos^2\theta} \tag{6.5}$$

(i) $\dfrac{\omega_2}{\omega_1}$ is unity when $\dfrac{\cos\alpha}{1-\sin^2\alpha\cos^2\theta} = 1$

or $\cos\alpha = 1 - \sin^2\cos^2\theta$

or $\cos^2\theta = \dfrac{1-\cos\alpha}{\sin^2\alpha}$

$$= \frac{1-\cos\alpha}{1-\cos^2\alpha}$$

$$= \frac{1-\cos\alpha}{(1+\cos\alpha)(1-\cos\alpha)}$$

$$= \frac{1}{1+\cos\alpha}$$

$$= \frac{\sin^2\theta+\cos^2\theta}{1+\cos\alpha}$$

$$= \frac{\cos^2\theta\left(\frac{\sin^2\theta}{\cos^2\theta}+1\right)}{1+\cos\alpha}$$

or $$\frac{\sin^2\theta}{\cos^2\theta}+1 = 1+\cos\alpha$$

or $$\tan^2\theta = \cos\alpha$$

$$\tan\theta = \pm\sqrt{\cos\alpha} \tag{6.6}$$

Thus, $\omega_2 = \omega_1$ or the velocities of the driven and the driving shafts are equal when the condition is fulfilled. This is possible once in all the four quadrants for particular values of θ if α is constant.

(ii) $\frac{\omega_2}{\omega_1}$ is minimum when the denominator of Eq. (6.5) is maximum,

i.e., $(1 - \sin^2\alpha\cos^2\theta)$ is maximum.

This is so when $\cos^2\theta$ is minimum,

or $\theta = 90°$ or $270°$

Then, $$\frac{\omega_2}{\omega_1} = \cos\alpha \tag{6.7}$$

(iii) $\frac{\omega_2}{\omega_1}$ is maximum when the denominator of Eq. (6.5) is minimum,

i.e. $(1 - \sin^2\alpha\cos^2\theta)$ is minimum,

or $\theta = 0°$ or $180°$

and $$\frac{\omega_2}{\omega_1} = \frac{\cos\alpha}{1-\sin^2\alpha} = \frac{\cos\alpha}{\cos^2\alpha} = \frac{1}{\cos\alpha} \tag{6.8}$$

The variation in the speed of the driven shaft corresponding to the rotation of the driving shaft is shown in Fig. 6.27. Points '*e*' correspond to the angular displacements of the driving shaft when the angular velocity of the driven shaft is equal to that of the driving shaft. Points 'min' and 'max' correspond to the angular displacements of the driving shaft when the angular speeds of the driven shaft are the minimum and the maximum respectively.

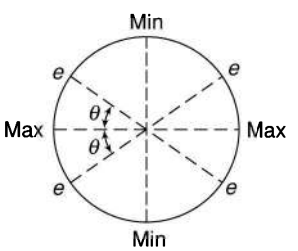

Fig. 6.27

Graphically, the variation of angular velocity of the driven shaft can be represented by an ellipse whereas that of the driving shaft, by a circle (Fig 6.28). Such a diagram is known as a *polar velocity diagram.*

Maximum variation of velocity of the driven shaft of its mean velocity

$$= \frac{\omega_{2\,\max} - \omega_{2\,\min}}{\omega_{\text{mean}}}$$

But ω_{mean} of the driven shaft is equal to the angular velocity ω_1 of the driving shaft as both the shafts complete one revolution in the same period of time.

$$\text{Maximum variation} = \frac{\omega_1 / \cos\alpha - \omega_1 \cos\alpha}{\omega_1} \qquad (6.9)$$

$$= \frac{1 - \cos^2\alpha}{\cos\alpha}$$

$$= \frac{\sin^2\alpha}{\cos\alpha}$$

$$= \tan\alpha \sin\alpha \qquad (6.10)$$

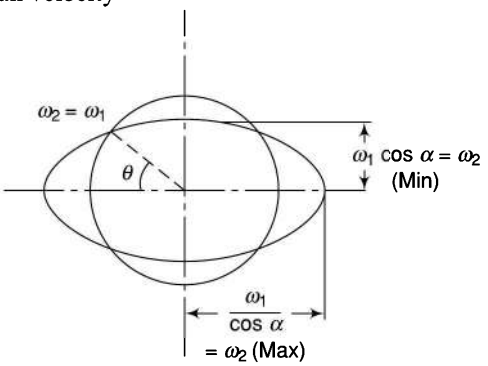

Fig. 6.28

If α is small, i.e., the angle between the axes of the two shafts is small,

$\sin\alpha \approx \tan\alpha \approx \alpha$.

Maximum variation $\approx \alpha^2$

(The mean speed ω is not equal to $\frac{\omega_{2\,\max} + \omega_{2\,\min}}{2}$ as the variation of speed is not linear throughout the rotation of the driven shaft.)

Angular Acceleration of Driven Shaft

Differentiating Eq. (6.5) with respect to time (ω_1 = constant)

$$\frac{d\omega_2}{dt} = \omega_1 \frac{d}{dt}\left(\frac{\cos\alpha}{1 - \sin^2\alpha\cos^2\theta}\right)$$

or

$$\text{acceleration} = \omega_1 . \frac{d\theta}{dt}\frac{d}{d\theta}\left(\frac{\cos\alpha}{1 - \sin^2\alpha\cos^2\theta}\right)$$

$$= \omega_1^2 \cos\alpha \frac{d}{d\theta}(1 - \sin^2\alpha\cos^2\theta)^{-1}$$

$$= \omega_1^2 \cos\alpha\,(-1)\,(1 - \sin^2\alpha\cos^2\theta)^{-2}$$

$$(-\sin^2\alpha)\,(2\cos\theta)\,(-\sin\theta)$$

$$= \frac{-\omega_1^2 \cos\alpha \sin^2\alpha \sin 2\theta}{(1 - \sin^2\alpha\cos^2\theta)^2} \qquad (6.11)$$

This is maximum or minimum when $\frac{d\,(acc)}{d\theta} = 0$. The resulting expression being very cumbersome, the result can be approximated to

$$\cos 2\theta \approx \frac{2\sin^2\alpha}{2 - \sin^2\alpha} \qquad (6.12)$$

This gives the maximum acceleration of the driven shaft corresponding to two values of θ in the second and the fourth quadrants whereas the minimum acceleration (maximum retardation) corresponds to θ values in the first and the third quadrants.

Care is to be taken to keep the angle between the two shafts to the minimum possible and not to attach

excessive masses to the driven shaft. Otherwise, very high alternating stresses due to the angular acceleration and retardation will be set up in the parts of the joint, which are undesirable.

***Example* 6.8** *Determine the maximum permissible angle between the shaft axes of a universal joint if the driving shaft rotates at 800 rpm and the total fluctuation of speed does not exceed 60 rpm. Also, find the maximum and the minimum speeds of the driven shaft.*

Solution:

$N_1 = 800$ rpm $\qquad \omega_{2\,max} - \omega_{2\,min} = 60$ rpm

We have

Maximum variation,

$$\frac{\omega_{2\,max} - \omega_{2\,min}}{\omega_{mean}} = \frac{1 - \cos^2 \alpha}{\cos \alpha}$$

or $$\frac{60}{800} = \frac{1 - \cos^2 \alpha}{\cos \alpha}$$

or $1 - \cos^2 \alpha - 0.075 \cos \alpha = 0$

$\cos^2 \alpha + 0.075 \cos \alpha = 1$

$(\cos \alpha + 0.0375)^2 = 1 + (0.0375)^2$

$= 1.0014 = (1.000\ 703)^2$

or

$\cos \alpha = 1.000\ 703 - 0.0375 = 0.963\ 203$

$\alpha = \underline{15.6°}$

Maximum speed of driven shaft

$$= \frac{N_1}{\cos \alpha} = \frac{800}{0.963\ 203}$$

$= \underline{830.6 \text{ rpm}}$

Minimum speed of driven shaft $= N_1 \cos \alpha = 800 \times 0.963\ 203 = \underline{770.6 \text{ rpm}}$

***Example* 6.9** *The driving shaft of a Hooke's joint rotates at a uniform speed of 400 rpm. If the maximum variation in speed of the driven shaft is ± 5% of the mean speed, determine the greatest permissible angle between the axes of the shafts. What are the maximum and the minimum speeds of the driven shaft?*

Solution:

$N_1 = 400$ rpm

Maximum variation in speed = 0.1 $\quad$ ...(0.05 + 0.05 = 0.1)

or

$$\frac{1 - \cos^2 \alpha}{\cos \alpha} = 0.1$$

$1 - \cos^2 \alpha - 0.1 \cos \alpha = 0$

$\cos^2 \alpha + 0.1 \cos \alpha = 1$

$(\cos \alpha + 0.05)^2 = 1 + (0.05)^2 = 1.0025$

$= (1.001\ 25)^2$

or

$\cos \alpha = 1.001\ 25 - 0.05 = 0.951\ 25$

$\alpha = 17.96°$ or $17° 58'$

Minimum speed of driven shaft

$$= \frac{N_1}{\cos \alpha} = \frac{400}{0.95\ 125}$$

$= \underline{420.5 \text{ rpm}}$

Minimum speed of driven shaft

$= N_1 \cos \alpha = 400 \times 0.951\ 25 = \underline{380.5 \text{ rpm}}$

***Example* 6.10** *A Hooke's joint connects two shafts whose axes intersect at 25°. What will be the angle turned by the driving shaft when the*

(i) velocity ratio is maximum, minimum and unity?

(ii) acceleration of the driven shaft is maximum, minimum (negative) and zero?

Solution:

(i) (a) ω_2/ω_1 is maximum at $\theta = 0°$ and $180°$

(b) ω_2/ω_1 is minimum at $\theta = 90°$ and $270°$

(c) ω_2/ω_1 is unity when

$\tan \theta = \pm\sqrt{\cos \alpha} = \pm\sqrt{\cos 25°}$

$= \pm\ 0.952$

or $\theta = 43°35'$, $136°25'$, $223°35'$, and $316°25'$

(ii) Acceleration of driven shaft is maximum or minimum when

$$\cos 2\theta \approx \frac{2 \sin^2 \alpha}{2 - \sin^2 \alpha} \approx \frac{2 \sin^2 25°}{2 - \sin^2 25°} \approx 0.196$$

or $2\theta \approx 78°42'$, $(360° - 78°42')$, $(360° + 78°42')$, $(720° - 78°42')$

or $\theta \approx 39°21'$, $140°39'$, $219°21'$ and $320°39'$

Now,

$$\text{acceleration} = \frac{-\omega_1^2 \cos\alpha \sin^2\alpha \sin\theta}{(1-\sin^2\alpha\cos^2\theta)^2}$$

Thus, acceleration is positive when $\sin 2\theta$ is negative and is negative when $\sin 2\theta$ is positive.

Corresponding to four values of 2θ found above, $\sin 2\theta$ will be +ve, –ve, +ve and –ve respectively.

Maximum acceleration will be at $140°39'$ and $320°39'$ and minimum acceleration (–ve) will be at $39°21'$ and $219°21'$.

Acceleration is zero when ω_2/ω_1 is maximum or minimum, i.e., at 0°, 90°, 180° and 270°.

Or acceleration is zero when 2θ is zero or when 2θ is 0°, 180°, 360°, 540° or when θ is 0°, 90°, 180° and 270°.

Example 6.11 *The angle between the axes of two shafts joined by Hooke's joint is 25°. The driving shaft rotates at a uniform speed of 180 rpm. The driven shaft carries a steady load of 7.5 kW. Calculate the mass of the flywheel of the driven shaft if its radius of gyration is 150 mm and the output torque of the driven shaft does not vary by more than 15% of the input shaft.*

Solution:

$\alpha = 25°$ $\quad N_1 = 180$ rpm

$P = 7.5$ kW $\quad \omega_1 = \dfrac{2\pi \times 180}{60} = 6\pi$

$k = 0.15$ m $\quad \Delta T = 15\%$

Maximum torque on the driven shaft will be when the acceleration is maximum, i.e., when

$$\cos 2\theta \approx \frac{2\sin^2\alpha}{2-\sin^2\alpha} \approx \frac{2\sin^2 25°}{2-\sin^2 25°} \approx 0.196$$

or

$2\theta = 78°42'$ or $281°18'$

$\therefore$ Maximum acceleration

$$= \frac{-\omega_1^2 \cos\alpha \sin^2\alpha \sin 2\theta}{(1-\sin^2\alpha\cos^2\theta)^2}$$

$$= \frac{-(6\pi)^2 \cos 25° \sin^2 25° \sin 281°18'}{(1-\sin^2 25° \cos^2 140°39')^2}$$

$= 70.677$ rad/s^2

$P = T\omega_1$

$7500 = T \times 6\pi$

Input torque, $T = 397.9$ N.m

Permissible variation = torque due to acceleration of driven shaft

$397.9 \times 0.15 = I\alpha = mk^2\alpha$

or $397.9 \times 0.15 = m \times (0.15)^2 \times 70.677$

$m = \underline{37.53 \text{ kg}}$

Example 6.12 *A Hooke's joint connects two shafts whose axes intersect at 18°. The driving shaft rotates at a uniform speed of 210 rpm. The driven shaft with attached masses has a mass of 60 kg and radius of gyration of 120 mm. Determine the*

(i) torque required at the driving shaft if a steady torque of 180 N.m resists rotation of the driven shaft and the angle of rotation is 45°

(ii) angle between the shafts at which the total fluctuation of speed of the driven shaft is limited to 18 rpm

Solution:

$m = 60$ kg $\quad k = 120$ mm $\quad N = 210$ rpm

$$\omega = \frac{2\pi N}{60} = \frac{2\pi \times 210}{60} = 22 \text{ rad/s}$$

Maximum acceleration

$$= \frac{-\omega_1^2 \cos\alpha \sin^2\alpha \sin 2\theta}{(1-\sin^2\alpha\cos^2\theta)^2}$$

$$= \frac{-(22)^2 \cos 18° \sin^2 18° \sin 90°}{(1-\sin^2 18° \cos^2 45°)^2}$$

$$= -\frac{43.956}{0.907}$$

$= -48.47$ rad/s^2

The negative sign indicates that it is retardation at the instant.

Torque required for retardation of the driven shaft $= I\alpha = mk^2.\alpha$

$= 60 \times 0.12^2 \times (-48.47)$

$= -41.88$ N.m

Total torque required on the driven shaft, T_2

$$= \text{Steady torque} + \text{Accelerating torque}$$
$$= 180 + (-41.88)$$
$$= 138.12 \text{ N.m}$$

Now as $\quad P = T_1\omega_1 = T_2\omega_2$

$$\therefore\ T_1 = T_2\frac{\omega_2}{\omega_1} = T_2\frac{\cos\alpha}{1-\sin^2\alpha\cos^2\theta}$$

$$= 138.12 \times \frac{\cos 18^\circ}{1-\sin^2 18^\circ \cos^2 45^\circ}$$

$$= \underline{137.99 \text{ N.m}}$$

$$\text{Maximum variation} = \frac{1-\cos^2\alpha}{\cos\alpha}$$

or $$\frac{\omega_{2\,max} - \omega_{2\,min}}{\omega_{mean}} = \frac{1-\cos^2\alpha}{\cos\alpha}$$

or $$\frac{18}{180} = \frac{1-\cos^2\alpha}{\cos\alpha}$$

or $$1-\cos^2\alpha - 0.1\cos\alpha = 0$$

$$\cos^2\alpha + 0.1\cos\alpha = 1$$

On solving,

$$\alpha = \underline{17.96^\circ}$$

6.7 DOUBLE HOOKE'S JOINT

In a single Hooke's joint, the speed of the driven shaft is not uniform although the driving shaft rotates at a uniform speed. To get uniform velocity ratio, a double Hooke's joint has to be used. In a double Hooke's joint, two universal joints and an intermediate shaft are used. If the angular misalignment between each shaft and the intermediate shaft is equal, the driving and the driven shafts remain in exact angular alignment, though the intermediate shaft rotates with varying speed.

A single Hooke's joint was analysed assuming the axes of the two shafts and the fork of the driving shaft to be horizontal. The results showed that the speed of the driven shaft is the same after an angular displacement of 180°. Therefore, it is immaterial whether the driven shaft makes the angle α with the axis of the driving shaft to its left or right.

Thus, to have a constant velocity ratio

- the driving and the driven shafts should make equal angles with the intermediate shaft, and
- the forks of the intermediate shaft should lie in the same plane.

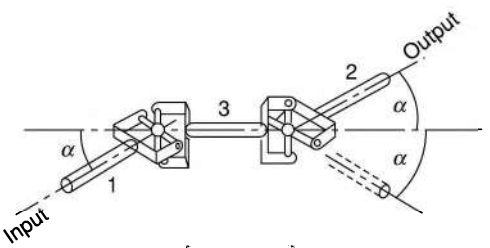

Fig. 6.29

Let γ be the angle turned by the intermediate shaft 3 while the angle turned by the driving shaft 1 and the driven shaft 2 be θ and φ respectively as before (Fig. 6.29).

Then,

$$\tan\theta = \cos\alpha\tan\gamma \qquad \text{(fork of shaft 1 horizontal)}$$

and

$$\tan\varphi = \cos\alpha\tan\gamma \qquad \text{(fork of shaft 2 horizontal)}$$

$$\therefore \qquad \theta = \varphi$$

This type of joint can be used for two intersecting shafts as well as for two parallel shafts.

However, if somehow the forks of the intermediate shafts lie in planes perpendicular to each other, the variation of speed of the driven shaft will be there.

$$\left(\frac{\omega_3}{\omega_1}\right)_{min} = \cos\alpha \qquad \text{(fork of the shaft 1 horizontal)}$$

$$\left(\frac{\omega_2}{\omega_3}\right)_{min} = \cos\alpha \qquad \text{(fork of the shaft 1 horizontal)}$$

$$\therefore \qquad \left(\frac{\omega_2}{\omega_1}\right)_{min} = \cos^2\alpha \tag{6.13}$$

Similarly,

$$\left(\frac{\omega_2}{\omega_1}\right)_{max} = \frac{1}{\cos^2\alpha} \tag{6.14}$$

Therefore, the maximum variation (fluctuation) of speed of the driven shaft is from $\cos^2\alpha$ to $1/\cos^2\alpha$.

Example 6.13 *The driving shaft of a double Hooke's joint rotates at 400 rpm. The angle of the driving and of the driven shaft with the intermediate shaft is 20°. If somehow the forks of the intermediate shaft lie in planes perpendicular to each other, determine the maximum and the minimum velocities of the driven shaft.*

Solution:

$$\omega_{2min} = \omega_1 \cos^2\alpha$$

or $$N_{2min} = N_1\cos^2\alpha = 400 \times \cos^2 20°$$

$$= \underline{353.2 \text{ rpm}}$$

$$N_{2max} = \frac{N_1}{\cos^2\alpha} = \frac{400}{\cos^2 20°}$$

$$= \underline{453 \text{ rpm}}$$

Summary

1. An exact straight-line mechanism guides a reciprocating part in an exact straight line.
2. An approximate straight-line mechanism is designed in such a way that the middle and the two extreme positions of the guided point are in a straight line and the intermediate positions deviate as little as possible from the line.
3. A *pantograph* is a four-bar linkage used to produce paths exactly similar to the ones traced out by a point on the linkage. The paths so produced are, usually, on an enlarged or a reduced scale.
4. An *indicator* of a reciprocating engine is an instrument that keeps the graphical record of pressure inside the cylinder during the piston stroke.
5. The fundamental equation of correct gearing for automobiles is, $\cot\varphi - \cot\theta = \frac{w}{l}$. Mechanisms that fulfill this fundamental equation are known as *steering gears*.
6. Two main types of steering gears are
   Davis steering gear, and
   Ackermann steering gear.
7. A *Davis steering gear* has sliding pairs which means more friction and easy wearing. The gear fulfils the fundamental equation of gearing in all the positions.
8. An *Ackermann steering gear* has only turning pairs and thus is preferred. Its drawback is that it fulfils the fundamental equation of correct gearing at the middle and the two extreme positions and not in all positions.
9. A *Hooke's joint* commonly known as a *universal joint*, is used to connect two non-parallel and intersecting shafts.
10. Speed of the driven shaft is minimum when $\theta = 90°$ or $270°$, and the minimum speed is given by $\omega_2 = \omega_1\cos\alpha$.
11. Speed of the driven shaft is maximum when $\theta = 0°$ or $180°$, and the maximum speed is given by $\omega_2 = \omega_1/\cos\alpha$.

Exercises

1. What is a pantograph? Show that it can produce paths exactly similar to the ones traced out by a point on a link on an enlarged or a reduced scale.
2. Enumerate straight-line mechanisms. Why are they classified into exact and approximate straight-line mechanisms?
3. Sketch a Paucellier mechanism. Show that it can be used to trace a straight line.
4. Prove that a point on one of links of a Hart mechanism traces a straight line on the movement of its links.
5. What is a Scott–Russel mechanism? What is its limitation? How is it modified?
6. In what way is a Grass–Hopper mechanism a derivation of the modified Scott–Russel mechanism?
7. How can you show that a Watt mechanism traces an approximate straight line?
8. How can we ensure that a Tchebicheff mechanism traces an approximate straight line?
9. Prove that a Kempe's mechanism traces an exact straight line using two identical mechanisms.
10. Discuss some of the applications of parallel linkages.
11. What is an engine indicator? Describe any one of them.
12. With the help of neat sketch discuss the working of a Crosby indicator.
13. Describe the function of a Thomson or a Dobbie McInnes Indicator.
14. What is an automobile steering gear? What are its types? Which steering gear is preferred and why?
15. What is fundamental equation of steering gears? Which steering gear fulfils this condition?
16. An Ackermann steering gear does not satisfy the fundamental equation of a steering gear at all positions. Yet it is widely used. Why?
17. What is a Hooke's joint? Where is it used?
18. Derive an expression for the ratio of angular velocities of the shafts of a Hooke's joint.
19. Sketch a polar velocity diagram of a Hooke's joint and mark its salient features.
20. Design and dimension a pantograph to be used to double the size of a pattern.
    (In Fig. 6.1, make $\frac{OC}{OD} = \frac{OR}{OP} = 2$. *Drawing tool at R; P traces the pattern*)
21. Design and dimension a pantograph which will decrease pattern dimensions by 30%.
    (In Fig. 6.1, make
    $\frac{OC}{OD} = \frac{OR}{OP} = \frac{100}{100-30}$; *Drawing tool at R; P traces the pattern*)
22. Design and dimension a pantograph that can be used to decrease pattern dimensions by 15%. The fixed pivot should lie between the tracing point and the marking point (tool holder).
    (In Fig. 6.1, make $\frac{CD}{OD} = \frac{RP}{OP} = \frac{100}{100-15}$;
    P, the fixed pivot; Drawing tool at O; R traces the pattern)
23. In Fig. 6.30, the dimensions of the various links are such that

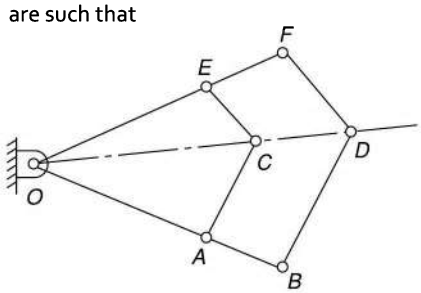

Fig. 6.30

$$\frac{OA}{OB} = \frac{OE}{OF} = \frac{AC}{BD} = \frac{EC}{FD}$$

Show that if C traces any path then D will describe a similar path and vice-versa.

24. Figure 6.31 shows a straight-line Watt mechanism. Plot the path of point P and mark and measure the straight line segment of the path of P.

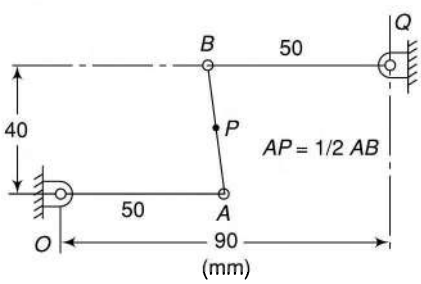

Fig. 6.31

25. Figure 6.32 shows a Robert straight-line mechanism in which *ABCD* is a four-bar linkage. The cranks *AB* and *DC* are equal and the connecting rod *BC* is one-half as long as the line of centres *AD*. *P* is a point rigidly attached to the connecting rod and lying on the midpoint of *AD* when *BC* is parallel to *AD*. Show that the point *P* moves in an approximately straight line for small displacement of the cranks.
(Note: *For better results take AB or DC* > 0.6 *AD*)

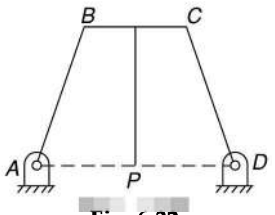

Fig. 6.32

26. In the Robert mechanism (Fig. 6.32) if *AB* = *BC* = *CD* = *AD*/2, locate the point *P* on the central vertical arm that approximately describes a straight line. (At a length 1.3 *BC* below *BC*)
27. In a Watt parallel motion (Fig. 6.10), the links *OA* and *QB* are perpendicular to the link *AB* in the mean position. The lengths of the moving links are *OA* = 120 mm, *QB* = 200 mm and *AB* = 175 mm.
Locate the position of a point *P* on *AB* to trace approximately a straight line motion. Also, trace the locus of *P* for all possible movements. (*AP* = 109.3 mm)
28. In a Watt mechanism of the type shown in Fig. 6.33, the links *OA* and *QB* are perpendicular to the link *AB* in the mean position. If *OA* = 45 mm, *QB* = 90 mm and *AB* = 60 mm, find the point *P* on the link *AB* produced for approximate straight-line motion of point *P*.

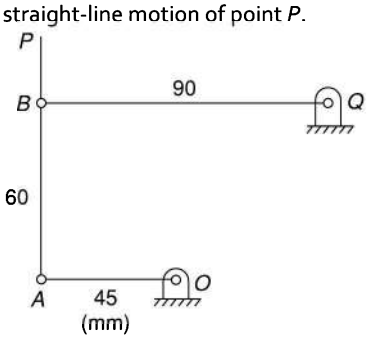

Fig. 6.33

(*AP* = 120 mm)

29. In a Davis steering gear, the length of the car between axles is 2.4 m, and the steering pivots are 1.35 m apart. Determine the inclination of the track arms to the longitudinal axis of the car when the car moves in a straight path.
(15°42′)
30. In a Hooke's joint, the angle between the two shafts is 15°. Find the angles turned by the driving shaft when the velocity of the driven shaft is maximum, minimum and equal to that of the driving shaft. Also, determine when the driven shaft will have the maximum acceleration and retardation.
(Max. vel. at 0° and 180°; min. at 90° and 270°; equal to 44°30′. 135°30′, 224°30′ and 315°30′; Max. acc. at 137° and 317°; and Max. ret. at 43° and 223°)
31. The driving shaft of a Hooke's joint has a uniform angular speed of 280 rpm. Determine the maximum permissible angle between the axes of the shafts to permit a maximum variation in speed of the driven shaft by 8% of the mean speed.
(22.6°)
32. The two shafts of a Hooke's coupling have their axes inclined at 20°. The shaft *A* revolves at a uniform speed of 1000 rpm. The shaft *B* carries a flywheel of mass 30 kg. If the radius of gyration of the flywheel is 100 mm, find the maximum torque in shaft *B*.
(411 N.m)
33. In a double universal coupling joining two shafts, the intermediate shaft is inclined at 10° to each. The input and the output forks on the intermediate shaft have been assembled inadvertently at 90° to one another. Determine the maximum and the least velocities of the output shaft if the speed of the input shaft is 500 rpm. Also, find the coefficient of fluctuation in speed.
(515.5 rpm; 484.9 rpm; 0.06)

7 CAMS

Introduction

A cam is a mechanical member used to impart desired motion to a follower by direct contact. The cam may be rotating or reciprocating whereas the follower may be rotating, reciprocating or oscillating. Complicated output motions which are otherwise difficult to achieve can easily be produced with the help of cams. Cams are widely used in automatic machines, internal combustion engines, machine tools, printing control mechanisms, and so on. They are manufactured usually by die-casting, milling or by punch-presses.

A cam and the follower combination belong to the category of higher pairs. Necessary elements of a cam mechanism are

- A driver member known as the *cam*
- A driven member called the *follower*
- A *frame* which supports the cam and guides the follower

The chapter outlines the methods of drawing the cam profiles as well as analysis to determine the velocity and acceleration at various positions of the follower. This information is useful in determining the smooth operation of the cam.

7.1 TYPES OF CAMS

Cams are classified according to

1. shape,
2. follower movement, and
3. manner of constraint of the follower.

According to Shape

1. ***Wedge and Flat Cams*** A wedge cam has a wedge W which, in general, has a translational motion [Figs 7.1(a) and (b). The follower F can either translate [Fig. 7.1(a)] or oscillate [Fig. 7.1(b)]. A spring is, usually, used to maintain the contact between the cam and

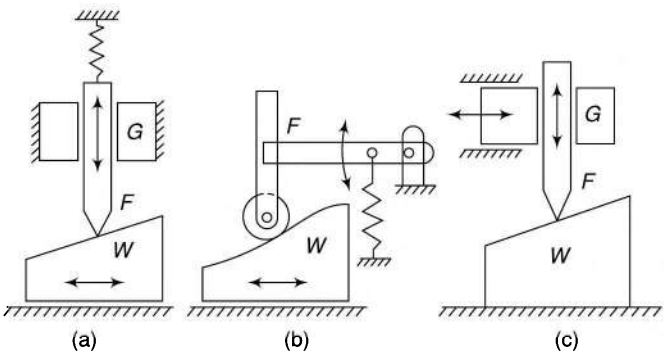

Fig. 7.1

the follower. In Fig. 7.1(c), the cam is stationary and the follower constraint or guide *G* causes the relative motion of the cam and the follower.

In stead of using a wedge, a flat plate with a groove can also be used. In the groove the follower is held as shown in Fig. 7.2. Thus, a positive drive is achieved without the use of a spring.

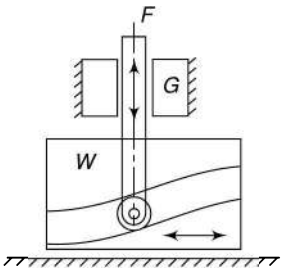

Fig. 7.2

2. ***Radial or Disc Cams*** A cam in which the follower moves radially from the centre of rotation of the cam is known as a radial or a disc cam [Fig. 7.3(a) and (b)]. Radial cams are very popular due to their simplicity and compactness.

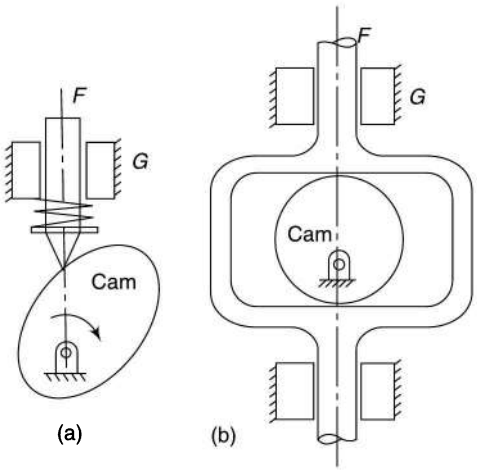

Fig. 7.3

3. ***Spiral Cams*** A spiral cam is a face cam in which a groove is cut in the form of a spiral as shown in Fig. 7.4. The spiral groove consists of teeth which mesh with a pin gear follower. The velocity of the follower is proportional to the radial distance of the groove from the axis of the cam.

   The use of such a cam is limited as the cam has to reverse the direction to reset the position of the follower. It finds its use in computers.

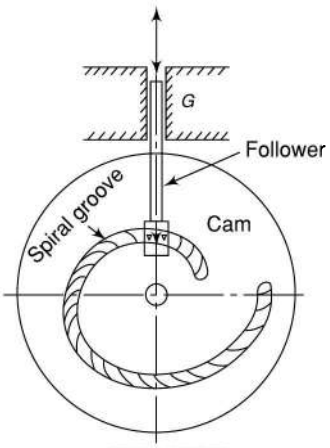

Fig. 7.4

4. ***Cylindrical Cams*** In a cylindrical cam, a cylinder which has a circumferential contour cut in the surface, rotates about its axis. The follower motion can be of two types as follows:

   In the first type, a groove is cut on the surface of the cam and a roller follower has a constrained (or positive) oscillating

motion [Fig. 7.5(a)]. Another type is an end cam in which the end of the cylinder is the working surface (7.5b). A spring-loaded follower translates along or parallel to the axis of the rotating cylinder.

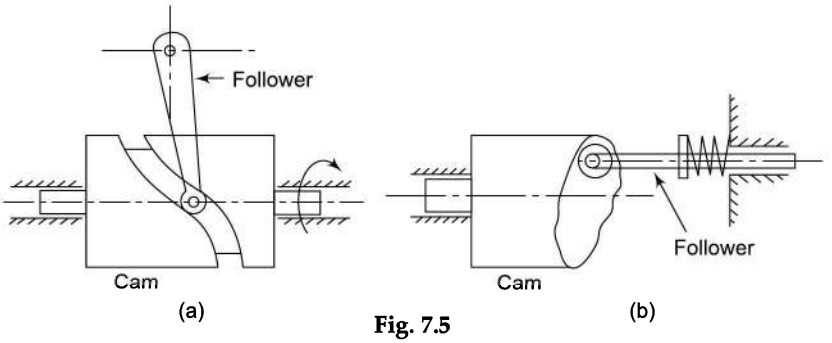

Fig. 7.5

Cylindrical cams are also known as *barrel* or *drum* cams.

5. ***Conjugate Cams*** A conjugate cam is a double-disc cam, the two discs being keyed together and are in constant touch with the two rollers of a follower (Fig. 7.6). Thus, the follower has a positive constraint. Such a type of cam is preferred when the requirements are low wear, low noise, better control of the follower, high speed, high dynamic loads, etc.

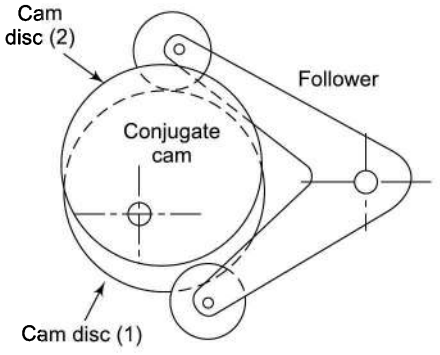

Fig. 7.6

6. ***Globoidal Cams*** A globoidal cam can have two types of surfaces, convex or concave. A circumferential contour is cut on the surface of rotation of the cam to impart motion to the follower which has an oscillatory motion (Fig. 7.7). The application of such cams is limited to moderate speeds and where the angle of oscillation of the follower is large.

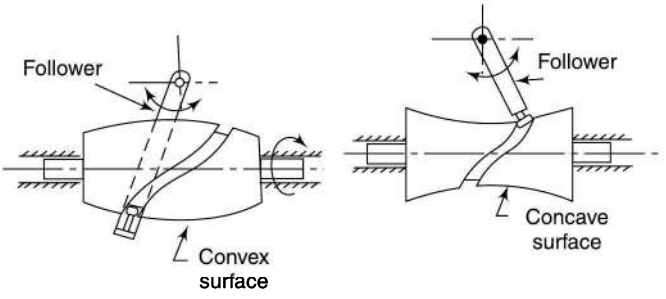

Fig. 7.7

7. ***Spherical Cams*** In a spherical cam, the follower oscillates about an axis perpendicular to the axis of rotation of the cam. Note that in a disc cam, the follower oscillates about an axis parallel to the axis of rotation of the cam.

A spherical cam is in the form of a spherical surface which transmits motion to the follower (Fig. 7.8).

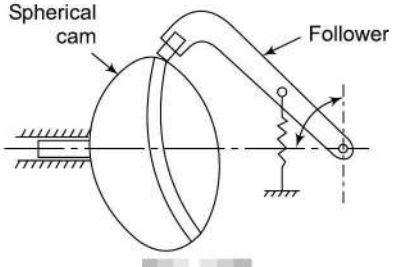

Fig. 7.8

According to Follower Movement

The motions of the followers are distinguished from each other by the dwells they have. A dwell is the zero displacement or the absence of motion of the follower during the motion of the cam.

Cams are classified according to the motions of the followers in the following ways:

1. ***Rise-Return-Rise*** **(R-R-R)** In this, there is alternate rise and return of the follower with no periods of dwells (Fig. 7.9a). Its use is very limited in the industry. The follower has a linear or an angular displacement.
2. ***Dwell-Rise-Return-Dwell (D-R-R-D)*** In such a type of cam, there is rise and return of the follower after a dwell [Fig. 7.9(b)]. This type is used more frequently than the R-R-R type of cam.
3. ***Dwell-Rise-Dwell-Return-Dwell*** **(D-R-D-R-D)** It is the most widely used type of cam. The dwelling of the cam is followed by rise and dwell and subsequently by return and dwell as shown in Fig. 7.9(c). In case the return of the follower is by a fall [Fig. 7.9(d)], the motion may be known as Dwell-Rise-Dwell (D-R-D).

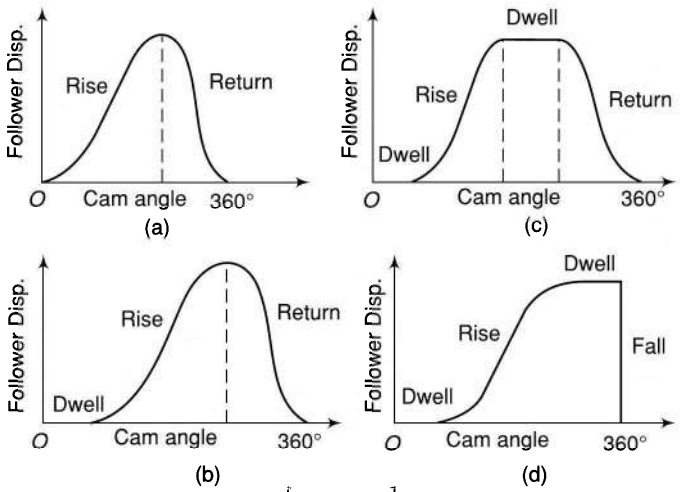

Fig. 7.9

According to Manner of Constraint of the Follower

To reproduce exactly the motion transmitted by the cam to the follower, it is necessary that the two remain in touch at all speeds and at all times. The cams can be classified according to the manner in which this is achieved.

1. ***Pre-loaded Spring Cam*** A pre-loaded compression spring is used for the purpose of keeping the contact between the cam and the follower [Figs 7.1(a) and (b), 7.3(a), 7.5(b) and 7.8].
2. ***Positive-drive Cam*** In this type, constant touch between the cam and the follower is maintained by a roller follower operating in the groove of a cam [Figs 7.2, 7.3(b). 7.4, 7.5(a) and 7.7]. The follower cannot go out of this groove under the normal working operations. A constrained or positive drive is also obtained by the use of a conjugate cam (Fig. 7.6).
3. ***Gravity Cam*** If the rise of the cam is achieved by the rising surface of the cam and the return by the force of gravity or due to the weight of the cam, the cam is known as a gravity cam. Figure 7.2(c) shows such a cam. However, these cams are not preferred due to their uncertain behaviour.

7.2 TYPES OF FOLLOWERS

Cam followers are classified according to the

1. shape,
2. movement, and
3. location of line of movement.

According to Shape

1. ***Knife-edge Follower*** It is quite simple in construction. Figure 7.1(a) shows such a follower. However, its use is limited as it produces a great wear of the surface at the point of contact.
2. ***Roller Follower*** It is a widely used cam follower and has a cylindrical roller free to rotate about a pin joint [Figs 7.1(b), 7.2, 7.5, 7.8]. At low speeds, the follower has a pure rolling action, but at high speeds, some sliding also occurs.

In case of steep rise, a roller follower jams the cam and, therefore, is not preferred.

3. ***Mushroom Follower*** A mushroom follower (Fig. 7.10) has the advantage that it does not pose the problem of jamming the cam. However, high surface stresses and wear are quite high due to deflection and misalignment if a flat-faced follower is used [Fig. 7.10(a)]. These disadvantages are reduced if a spherical-faced follower [Fig. 7.10(b)] is used instead of a flat-faced follower.

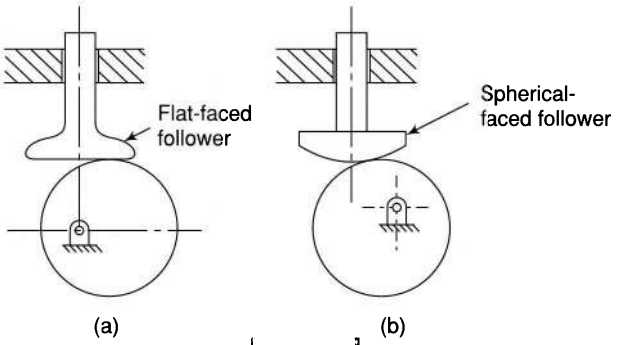

Fig. 7.10

According to Movement

1. ***Reciprocating Follower*** In this type, as the cam rotates, the follower reciprocates or translates in the guides [Fig. 7.1(a)].
2. ***Oscillating Follower*** The follower is pivoted at a suitable point on the frame and oscillates as the cam makes the rotary motion [Fig. 7.1(b)].

According to Location of Line of Movement

1. ***Radial Follower*** The follower is known as a radial follower if the line of movement of the follower passes through the centre of rotation of the cam [Figs 7.3(a) and (b)].
2. ***Offset Follower*** If the line of movement of the roller follower is offset from the centre of rotation of the cam, the follower is known as an offset follower [Fig. 7.10(b)].

A cam with two oscillating followers. This can operates the inlet as well as the exhaust valves of the engine

7.3 DEFINITIONS

With reference to Fig. 7.11, some definitions are given below:

Base Circle It is the smallest circle tangent to the cam profile (contour) drawn from the centre of rotation of a radial cam.

Trace point It is a reference point on the follower to trace the cam profile such as the knife-edge of a knife-edged follower and centre of the roller of a roller follower.

Pitch Curve It is the curve drawn by the trace point assuming that the cam is fixed, and the trace point of the follower rotates around the cam.

Pressure Angle The pressure angle, representing the steepness of the cam profile, is the angle between the normal to the pitch curve at

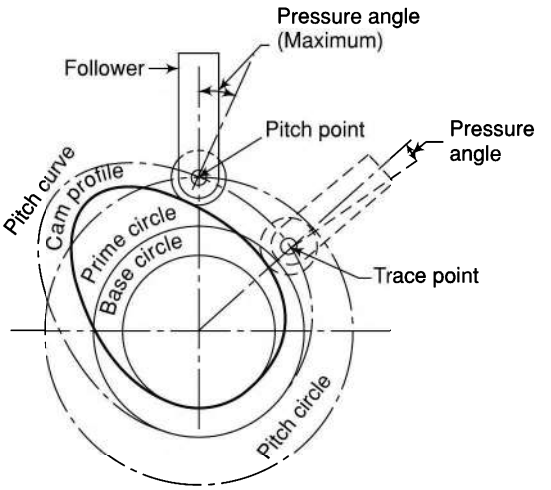

Fig. 7.11

a point and the direction of the follower motion. It varies in magnitude at all instants of the follower motion. A high value of the maximum pressure angle is not desired as it might jam the follower in the bearings.

Pitch Point It is the point on the pitch curve at which the pressure angle is maximum.

Pitch Circle It is the circle passing through the pitch point and concentric with the base circle.

Prime Circle The smallest circle drawn tangent to the pitch curve is known as the prime circle.

7.4 FOLLOWER DISPLACEMENT PROGRAMMING

As a cam rotates about the axis, it imparts a specific motion to the follower which is repeated with each revolution of the cam. Thus, it is enough to know the motion of the follower for only one revolution. During rotation of the cam through one revolution, the follower is made to execute a series of events such as rises, dwells and returns. The motion of the cam can be represented on a graph, the x-axis of which may represent the angular displacement of the cam and y-axis, the angular or the linear displacement of the follower. The follower displacement is measured from its lowest position and is plotted with the same scale as is to be used in the layout of the cam profile. The following terms are used with reference to the angular motion of the cam:

- ***Angle of Ascent*** (ϕ_a) It is the angle through which the cam turns during the time the follower rises.
- ***Angle of Dwell*** (δ) The angle of dwell is the angle through which the cam turns while the follower remains stationary at the highest or the lowest position.
- ***Angle of Descent*** (ϕ_d) It is the angle through which the cam turns during the time the follower returns to the initial position.
- ***Angle of Action*** The angle of action is the total angle moved by the cam during the time, between the beginning of rise and the end of the return of the follower.

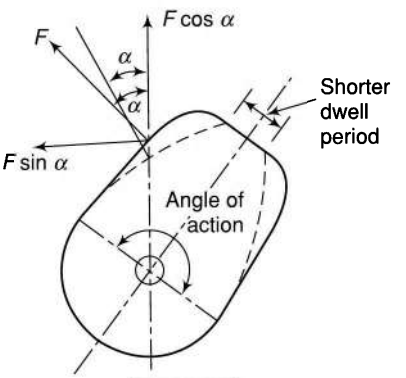

Fig. 7.12

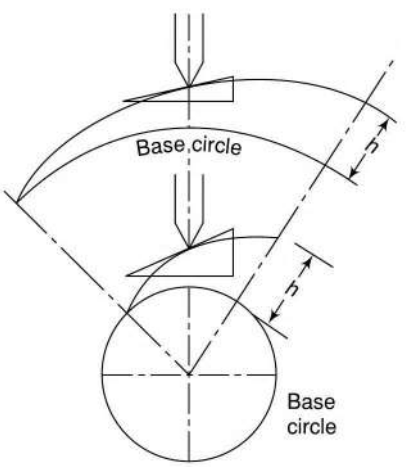

Fig. 7.13

To satisfy the given requirements of the follower displacement, a programme can be made keeping in view the following points:

1. In a given specific interval of time, due consideration to the velocity and the acceleration must be given, the effects of which are manifested as inertia loads. The dynamic effects of acceleration, usually limit the speed of the cams. Moreover, effects of jerks (rate of change of acceleration) in case of high-speed mechanisms produce vibrations of the system, which is undesirable for a follower motion. Though it is very difficult to completely eliminate jerk, efforts are to be made to keep it within tolerable limits.
2. The force exerted by a cam on the follower is always normal to the surface of the cam at the point of contact. The vertical component ($F \cos\alpha$) lifts the follower whereas the horizontal component ($F \sin\alpha$) exerts lateral pressure on the bearing as shown in Fig. 7.12.
   In order to reduce the lateral pressure or $F \sin \alpha$, α has to be decreased which means making the surface more convex and longer (dotted lines). This results in reduced velocity of the follower and

more time for the same rise. This also reduces the dwell period for a fixed angle of action. In internal combustion engines, a shorter dwell period means a smaller period of valve-opening, resulting in less fuel per cycle and lesser power production. Thus, the minimum value of α cannot be reduced from a certain value.

3. The size of the base circle controls the pressure angle. As shown in Fig. 7.13, the increase in the base circle diameter increases the length of the arc of the circle upon which the wedge (the raised portion) is to be made. A short wedge for a given rise requires a steep rise or a higher pressure angle, thus increasing the lateral force.

7.5 DERIVATIVES OF FOLLOWER MOTION

The derivatives of follower motion can be *kinematic* (with respect to θ) which relate to the geometry of the cam system or *physical* (with respect to time) which relate to the motion of the follower of the cam system.

Kinematic Derivatives

A displacement diagram of the follower motion is plotted with the cam angle θ as the abscissa and the follower linear or angular motion as the ordinate. Thus, it is a graph that relates the input and the output of the cam system. Mathematically, if s is the displacement of the follower. Then

$$s = s\,(\theta)$$

Differentiating it with respect to θ provides the first derivative,

$$\dot{s}(\theta) = \frac{ds}{d\theta}$$

It represents the slope or the steepness of the displacement curve at each position of the cam angle. A higher value of this means a steep rise or fall which hampers the smooth running of the cam.

The second derivative is represented by

$$\ddot{s}(\theta) = \frac{d^2s}{d\theta^2}$$

This derivative is related to the radius of curvature of the cam at different points along its profile and is in inverse proportion. Thus, with an increase in its value, the radius of curvature decreases. If its value becomes infinity, the cam profile becomes pointed at that position which is undesirable from the point of view of stresses between the cam and follower surfaces.

The next derivative can also be taken if desired:

$$\dddot{s}(\theta) = \frac{d^3s}{d\theta^3}$$

It is not easy to describe it geometrically. However, it should also be controlled as far as possible while choosing the shape of the displacement diagram for smooth working of the cam.

Physical Derivatives

We have, $s = s(\theta)$ and $\theta = \theta(t)$

Taking the first derivative with respect to time,

$$\dot{s} = \frac{ds}{dt} = \frac{ds}{d\theta}\,\frac{d\theta}{dt} = \omega\,\frac{ds}{d\theta}$$

which represents the velocity of the follower.

The second derivative is

$$\ddot{s} = \frac{d^2s}{dt^2} = \omega^2 \frac{d^2s}{d\theta^2}$$

It represents the *acceleration* of the follower. A higher value of acceleration means a higher inertia force. A third derivative is known as the *jerk*.

$$\dddot{s} = \frac{d^3s}{dt^3} = \omega^3 \frac{d^3s}{d\theta^3}$$

For smooth movement of the follower, even the high values of the jerk are undesirable in case of high-speed cams.

7.6 HIGH-SPEED CAMS

A real follower always has some mass and when multiplied by acceleration, inertia force of the follower is obtained. This force is always felt at the contact point of the follower with the cam surface and at the bearings. An acceleration curve with abrupt changes exerts abrupt stresses on the cam surfaces and at the bearings accompanied by detrimental effects such as surface wear and noise. All this may lead to an early failure of the cam system. Thus, it is very important to give due consideration to velocity and acceleration curves while choosing a displacement diagram. They should not have any step changes.

In low-speed applications, cams with discontinuous acceleration characteristics may not show any undesirable characteristic, but at higher speeds such cams are certainly bound to show the same. The higher the speed, the higher is the need for smooth curves. At very high speeds, even the jerk (related to rate of change of acceleration or force) is made continuous as well. For most of the applications, however, this may not be needed. In Section 7.8, standard cam motions have been discussed from which some comparison can easily be made for suitable selection.

7.7 UNDERCUTTING

Sometimes, it may happen that the prime circle of a cam is proportioned to provide a satisfactory pressure angle; still the follower may not be completing the desired motion. This can happen if the curvature of the pitch curve is too sharp.

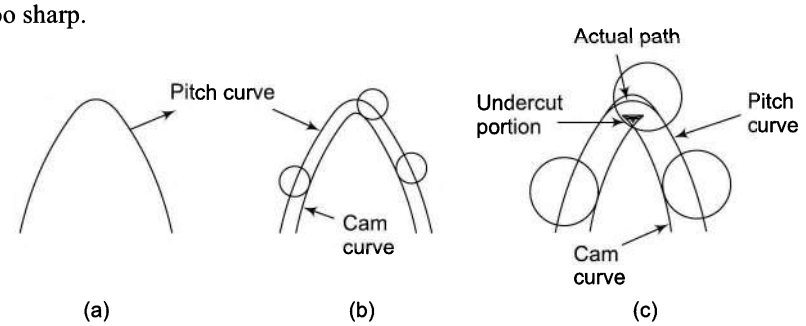

Fig. 7.14

Figure 7.14(a) shows the pitch curve of a cam. In Fig. 7.14(b), a roller follower is shown generating this curve. In Fig. 7.14(c), a larger roller is shown trying to generate this curve. It can easily be observed that the

cam curve loops over itself in order to realize the profile of the pitch curve. As it is impossible to produce such a cam profile, the result is that the cam will be undercut and become a pointed cam. Now when the roller follower will be made to move over this cam, it will not be producing the desired motion.

It may be observed that the cam will be pointed if the radius of the roller is equal to the radius of curvature of the pitch curve. Thus, to have a minimum radius of curvature of the cam profile, the radius of curvature of the prime circle must always be greater than that of the radius of the roller.

7.8 MOTIONS OF THE FOLLOWER

Though the follower can be made to have any type of desired motion, knowledge of the existing motion programmes saves time and labour while designing the cams.

Following are some basic displacement programmes:

1. Simple Harmonic Motion (SHM)

This is a popular follower motion and is easy to lay out.

Let s = follower displacement (instantaneous)

h = maximum follower displacement

v = velocity of the follower

f = acceleration of the follower

θ = cam rotation angle (instantaneous)

φ = cam rotation angle for the maximum follower displacement

β = angle on the harmonic circle.

Construction The follower rises through a distance h while the cam turns through an angle φ. Construct the follower displacement curve as follows (Fig. 7.15).

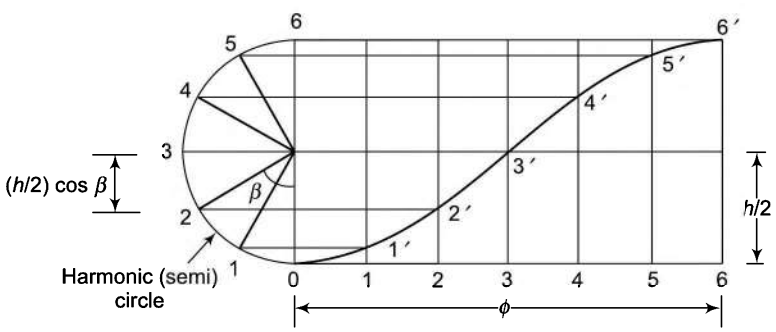

Fig. 7.15

(i) Draw a semicircle with cam rise (or fall) as the diameter. This is, usually known as the harmonic (semi) circle. Divide this semicircle into n equal arcs (n even).

(ii) Divide the cam displacement interval into n equal divisions.

(iii) Project the intercepts of the harmonic semicircle to the corresponding divisions of the cam displacement interval.

(iv) Join the points with a smooth curve to obtain the required harmonic curve.

Displacement At any instant, displacement of the follower is given by,

$$s = \frac{h}{2} - \frac{h}{2}\cos\beta$$

$$= \frac{h}{2}(1 - \cos\beta) \qquad \text{(i)}$$

For the rise (or fall) h of the follower displacement, the cam is rotated through an angle φ whereas a point on the harmonic semicircle traverses an angle π. Thus, the cam rotation is proportional to the angle turned by the point on the harmonic semicircle, i.e.

$$\beta = \pi\frac{\theta}{\varphi}$$

Thus β can be replaced by θ and φ in Eq. (i) above,

$$s = \frac{h}{2}\left(1 - \cos\frac{\pi\theta}{\varphi}\right) \qquad (7.1)$$

The expression is also valid for β more than 90°. In that case, cos β or cos $\pi\theta/\varphi$ becomes negative so that s is again positive and more than $h/2$.

Let ω = Angular velocity of the cam

$\therefore \qquad \theta = \omega t$

and $\qquad s = \frac{h}{2}\left(1 - \cos\frac{\pi\omega t}{\varphi}\right)$

$$v = \frac{ds}{dt} = \frac{h}{2}\frac{\pi\omega}{\varphi}\sin\frac{\pi\omega t}{\varphi}$$

$$= \frac{h}{2}\frac{\pi\omega}{\varphi}\sin\frac{\pi\theta}{\varphi} \qquad (7.2)$$

$$v_{\max} = \frac{h}{2}\frac{\pi\omega}{\varphi} \text{ at } \theta = \frac{\varphi}{2} \qquad (7.3)$$

$$f = \frac{dv}{dt} = \frac{h}{2}\left(\frac{\pi\omega}{\varphi}\right)^2\cos\frac{\pi\omega t}{\varphi}$$

$$= \frac{h}{2}\left(\frac{\pi\omega}{\varphi}\right)^2\cos\frac{\pi\theta}{\varphi} \qquad (7.4)$$

$$f_{\max} = \frac{h}{2}\left(\frac{\pi\omega}{\varphi}\right)^2 \text{ at } \theta = 0 \qquad (7.5)$$

Let φ_a = angle of ascent

φ_d = angle of descent

$\delta_{1,2}$ = angles of dwells

It can be seen from the plots of Fig. 7.16 that there is an abrupt change of acceleration from zero to maximum at the beginning of the follower motion and also from maximum (negative) to zero at the end of the follower motion when the follower rises. Similar abruption would also be there at the start and end

of the return motion. As these abrupt changes result in infinite jerk, vibration and noise, the programme should be adopted only for low or moderate cam speeds.

2. Constant Acceleration and Deceleration (Parabolic)

In such a follower programme, there is acceleration in the first half of the follower motion whereas it is deceleration during the later half. The displacement curve is found to be parabolic in this case. The magnitude of the acceleration and the deceleration is the same and constant in the two halves.

Construction Refer Fig. 7.17(a).

(i) Divide each half of the cam displacement interval into n equal divisions.

(ii) Divide half the follower rise into n^2 equal divisions.

(iii) Project 1^2 displacement interval to the first ordinate of the cam displacement, 2^2 to the second ordinate, 3^2 to the third, and so on.

(iv) The second half of the curve is similar to the first half.

Alternatively, divide half of the follower rise at the central ordinate of the cam displacement into n equal divisions [Fig. 17.17(b)]. Joining the zero point with the first division gives 1^2 on the first ordinate, with the second division 2^2 on the second ordinate, and so on.

The equation for the linear motion with constant acceleration f (during the first half of the follower motion) is found as follows:

$$s = v_0 t + \frac{1}{2} f t^2$$

where v_o is the initial velocity at the start of the motion (rise or fall) and is zero in this case.

$$\therefore \qquad S = \frac{1}{2} f t^2$$

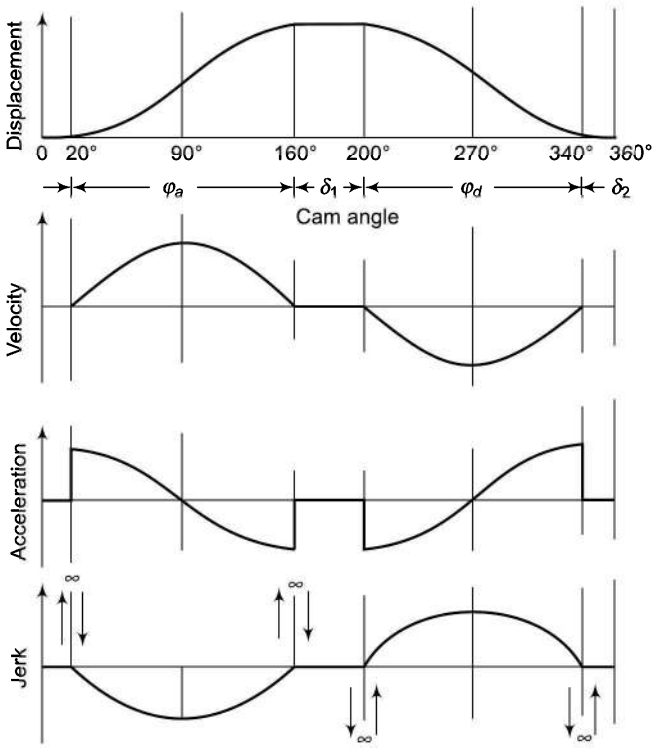

Fig. 7.16

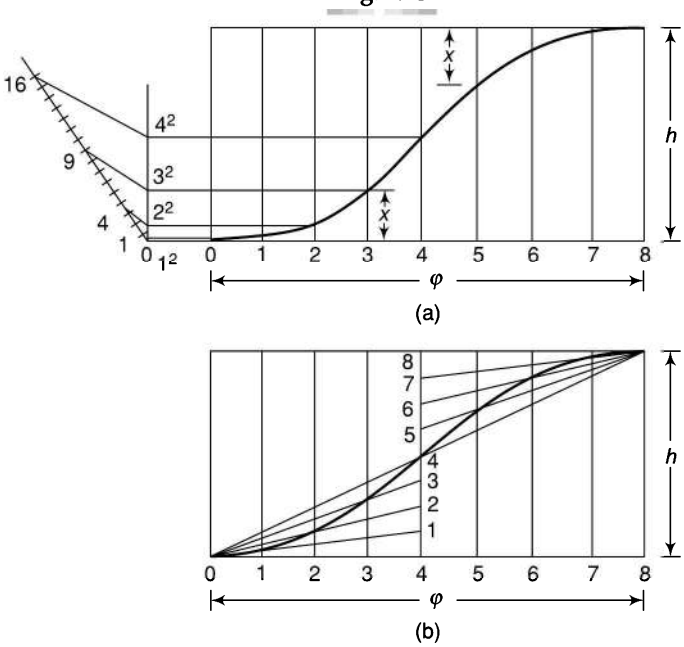

Fig. 7.17

or $$f = \frac{2s}{t^2} = \text{constant} \tag{7.6}$$

As f is constant during the accelerating period, considering the follower at the midway,

$$s = \frac{h}{2} \quad \text{and} \quad t = \frac{\varphi / 2}{\omega}$$

$$\therefore \quad f = \frac{2h/2}{\varphi^2 / 4\omega^2} = \frac{4h\omega^2}{\varphi^2} \tag{7.6a}$$

The velocity is linear during the period and is given by

$$v = \frac{ds}{dt} = \frac{1}{2} \times 2ft = ft \tag{7.7}$$

$$= \frac{4h\omega^2}{\varphi^2} \frac{\theta}{\omega} \qquad (\theta = \omega t)$$

$$= \frac{4h\omega}{\varphi^2} \theta \tag{7.7a}$$

The velocity is maximum when θ is maximum or the follower is at the midway, i.e., when $\theta = \varphi/2$.

$$v_{\max} = \frac{4h\omega}{\varphi^2} \frac{\varphi}{2} = \frac{2h\omega}{\varphi} \tag{7.8}$$

During the second half of the follower motion, the follower is decelerated at constant rate so that the velocity reduces to zero at the end.

It can be observed from the plots shown in Fig. 7.18 that there are abrupt changes in the acceleration at the beginning, midway and the end of the follower motion. At midway, an infinite jerk is produced. Thus, this programme of the follower is adopted only up to moderate speeds.

3. Constant Velocity

Constant velocity of the follower implies that the displacement of the follower is proportional to the cam displacement and the slope of the displacement curve is constant (Fig. 7.19).

Displacement of the follower for the

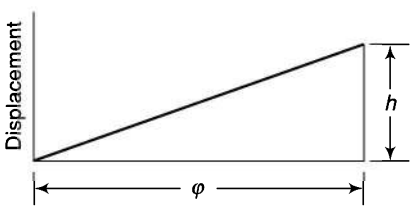

Fig. 7.19

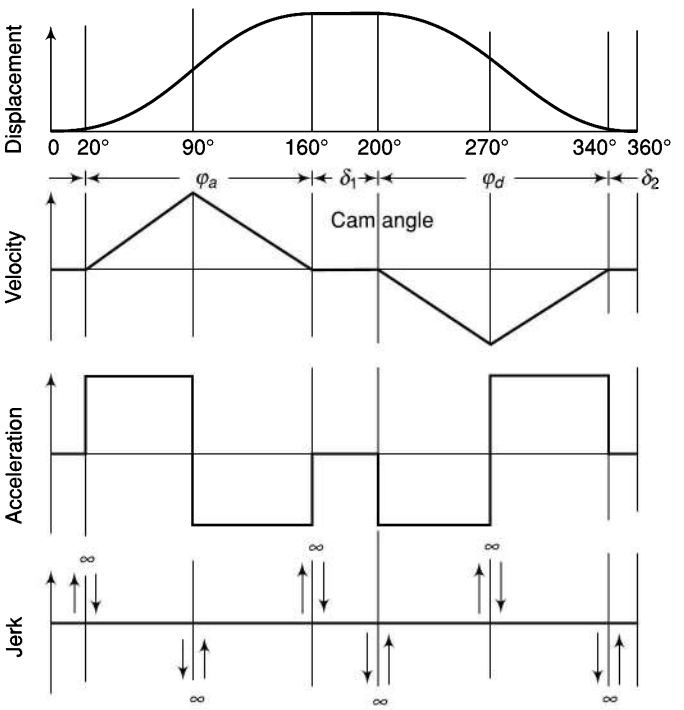

Fig. 7.18

angular displacement θ of the cam is given by

$$s = h\frac{\theta}{\varphi} = h\frac{\omega t}{\varphi} \tag{7.9}$$

$$v = \frac{ds}{dt} = \frac{h\omega}{\varphi} \text{ constant} \tag{7.10}$$

$$f = \frac{dv}{dt} = 0 \tag{7.11}$$

As seen in the plots of Fig. 7.20(a), though acceleration is zero during the rise or the fall of the follower, it is infinite at the beginning and end of the motion as there are abrupt changes in velocity at these points. This results in infinite inertia forces and thus is not suitable from the practical point of view.

A modified programme for the follower motion can be evolved in which the accelerations are reduced to finite values. This can be done by rounding the sharp corners of the displacement curve so that the velocity changes are gradual at the beginning and end of the follower motion. During these periods, the acceleration may be assumed to be constant and of finite values. A modified constant velocity programme is shown in Fig. 7.20(b).

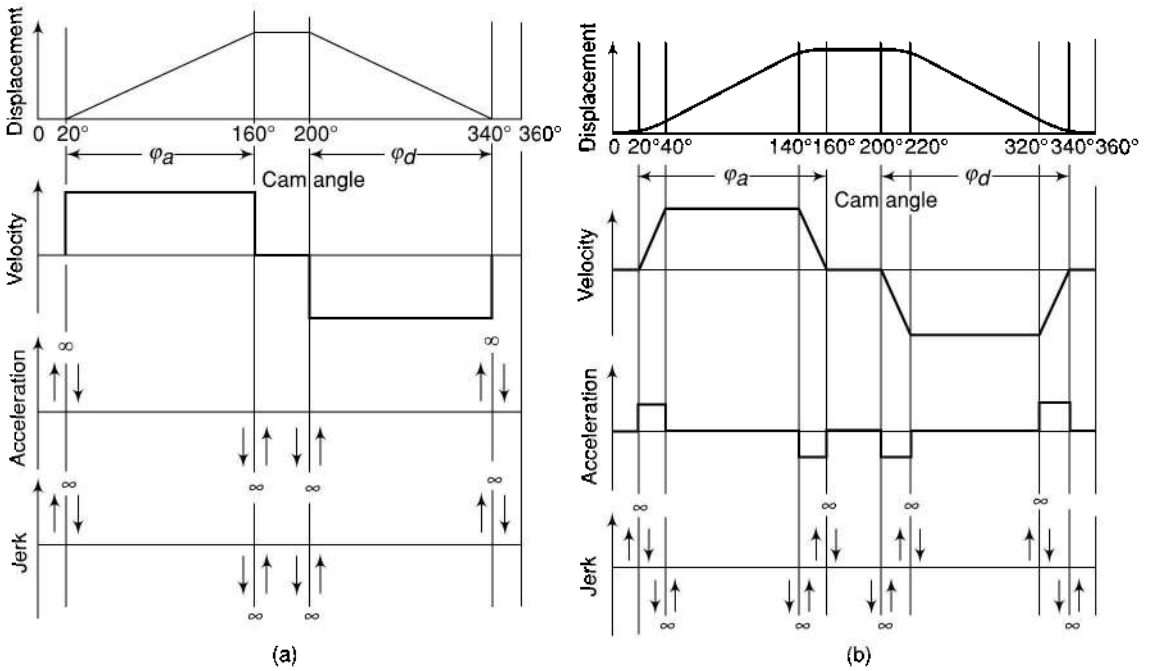

Fig. 7.20

4. Cycloidal

A cycloidal is the locus of a point on a circle rolling on a straight line.

Construction (Refer Fig. 7.21)

(i) Divide the cam displacement interval into n equal parts (n even).

(ii) Draw the diagonal of the diagram and extend it below.

(iii) Draw a circle with the centre anywhere on the lower portion of the diagonal such that its circumference

is equal to the follower displacement, i.e., $2\pi r = h$ or $r = h/2\pi$.

(iv) Divide the circle into n equal arcs and number them as shown in the diagram.

(v) Project the circle points to its vertical diameter and then in a direction parallel to the diagonal of the diagram to the corresponding ordinates.

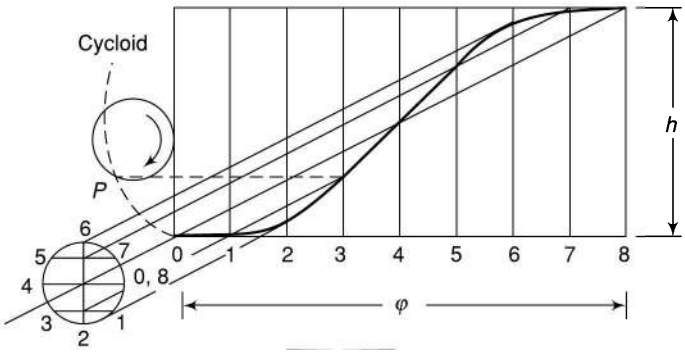

Fig. 7.21

Joining the points with a curve gives the required cycloidal. Mathematically, a cycloidal is expressed by

$$s = \frac{h}{\pi}\left(\frac{\pi\theta}{\varphi} - \frac{1}{2}\sin\frac{2\pi\theta}{\varphi}\right) \tag{7.12}$$

$$v = \frac{ds}{dt} = \frac{ds}{d\theta}\frac{d\theta}{dt}$$

$$= \left[\frac{h}{\varphi} - \frac{h}{2\pi}\frac{2\pi}{\varphi}\cos\frac{2\pi\theta}{\varphi}\right]\omega$$

$$= \frac{h\omega}{\varphi} - \frac{h\omega}{\varphi}\cos\frac{2\pi\theta}{\varphi} \tag{7.13}$$

$$= \frac{h\omega}{\varphi}\left(1 - \cos\frac{2\pi\theta}{\varphi}\right)$$

$$v_{max} = \frac{2h\omega}{\varphi} \text{ at } \theta = \frac{\varphi}{2} \tag{7.14}$$

$$f = \frac{dv}{dt} = \frac{dv}{d\theta}\frac{d\theta}{dt}$$

$$= \left[\frac{h\omega}{\varphi}\frac{2\pi}{\varphi}\sin\frac{2\pi\theta}{\varphi}\right]\omega$$

$$= \frac{2h\pi\omega^2}{\varphi^2}\sin\frac{2\pi\theta}{\varphi} \tag{7.15}$$

$$f_{max} = \frac{2h\pi\omega^2}{\varphi^2} \text{ at } \theta = \frac{\varphi}{4} \tag{7.16}$$

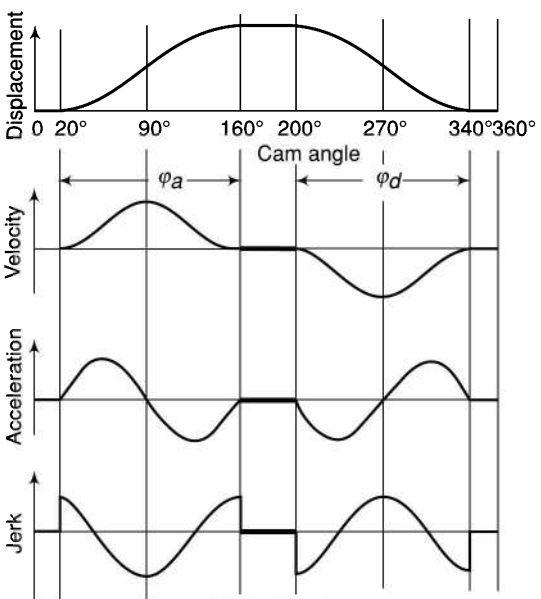

Fig. 7.22

From the plots of Fig. 7.22, it is observed that there are no abrupt changes in the velocity and the acceleration at any stage of the motion. Thus, it is the most ideal programme for high-speed follower motion.

7.9 LAYOUT OF CAM PROFILES

A cam profile is constructed on the principle of kinematic inversion, i.e., considering the cam to be stationary and the follower to be rotating about it in the opposite direction of the cam rotation. In general, the following procedure is adopted for laying out the profile for a reciprocating follower:

1. Draw the displacement diagram of the follower according to the given follower motion by dividing the cam displacement interval into n equal parts as has been discussed in the previous section. The usual number taken is 6, 8, 10 or 12 depending upon the angular displacement and convenience. Remember that the scale of the displacement interval does not affect the cam profile whereas the follower displacement does.
2. Draw the prime circle of the cam with radius
   (a) r_c if it is a knife-edge or mushroom follower (Ex. 7.1, 7.2 and 7.5)
   (b) $r_c + r_r$ if it is a roller follower (Ex. 7.3 and 7.4)
3. Divide the prime circle into segments as follows:
   (a) In case of a radial follower, divide the circle from the vertical position indicating the angles of ascent, dwell period and angle of descent, etc., in the opposite direction of the cam rotation (Ex. 7.1, 7.3 and 7.5).
   (b) In case of an offset follower, draw another circle with radius equal to the offset of the follower and assume the initial position on the prime circle where the tangent to the horizontal radius of the circle meets the prime circle (Ex. 7.2 and 7.4).
4. Further, divide each segment of ascent and descent into the same number of angular parts as is done in the displacement diagram.
5. On the radial lines produced, mark distances equal to the lift of the follower beyond the circumference of the prime circle (Ex. 7.1, 7.3 and 7.5). In case of offset follower, the distances are marked on the tangents drawn to the circle with radius equal to the offset (Ex. 7.2 and 7.4). It can be visualized that with rotation of the cam, each radial or tangential line so obtained merges with the axis of the follower at successive intervals of time and the marked points are the various positions of the tracing point of the follower.
6. Obtain the cam profile as follows:
   (a) For a knife-edge follower, draw a smooth curve passing through the marked points which is the required cam profile (Ex. 7.1 and 7.2).
   (b) In case of a roller follower, draw a series of arcs of radii equal to r_r on the inner side and draw a smooth curve tangential to all the arcs to get the required cam profile (Ex. 7.3 and 7.4).
   (c) For a mushroom follower, draw the follower in all the positions by drawing perpendiculars to the radial or tangent lines and draw a smooth curve tangential to the flat-faces of the follower representing the cam profile (Ex. 7.5).

Example 7.1 *Draw the profile of a cam operating a knife-edge follower having a lift of 30 mm. The cam raises the follower with SHM for 150° of the rotation followed by a period of dwell for 60°. The follower descends for the next 100° rotation of the cam with uniform velocity, again followed by a dwell period. The cam rotates at a uniform velocity of 120 rpm and has a least radius of 20 mm. What will be the maximum velocity and acceleration of the follower during the lift and the return?*

Solution:

$h = 30$ mm $\quad \varphi_a = 150°$

$N = 120$ rpm $\quad \delta_1 = 60°$

$r_c = 20$ mm $\quad \varphi_d = 100°$

$\delta_2 = (360° - 150° - 100° - 60°) = 50°$

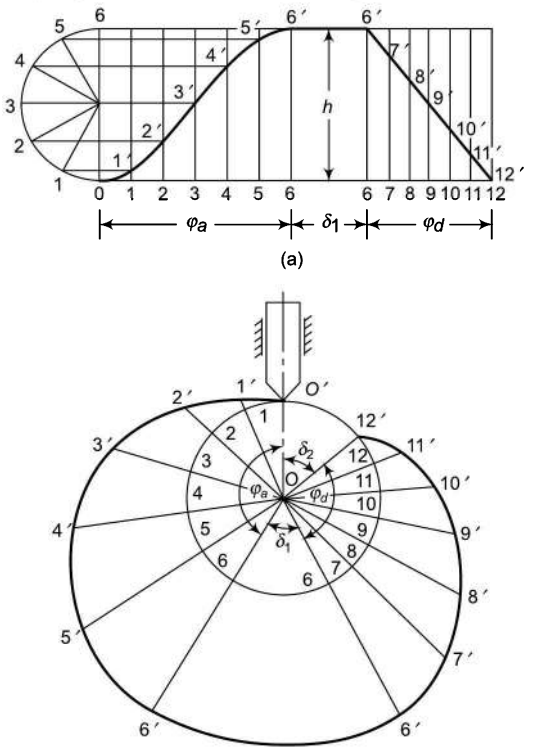

Fig. 7.23

Draw the displacement diagram of the follower as discussed earlier [Fig. 7.23(a)] taking a convenient scale. Construct the cam profile as follows [refer Fig. 7.23(b)]:

(i) Draw a circle with radius r_c.

(ii) If the cam rotates clockwise and the follower remains in vertical direction, the cam profile can be drawn by assuming that the cam is stationary and the follower rotates about the cam in the counter-clockwise direction.
From the vertical position, mark angles φ_a, δ_1, φ_d, and δ_2 in the counter-clockwise direction, representing angles of ascent, rest or dwell, descent and rest respectively.

(iii) Divide the angles φ_a and φ_d into same number of parts as is done in the displacement diagram. In this case, each has been divided into 6 equal parts.

(iv) Draw radial lines O-1, O-2, O-3, etc., O-1 represents that after an interval of $\varphi_d/6$ of the cam rotation in the clockwise direction it will take the vertical position of O-O'.

(v) On the radial lines produced, take distances equal to the lift of the follower beyond the circumference of the circle with radius r_c, i.e., 1-1′, 2-2′, 3-3′, etc.

(vi) Draw a smooth curve passing through O', 1′, 2′,…., 10′, 11′ and 12′. Draw an arc of radius O-6′ for the dwell period δ_1.

During ascent

$$\omega = \frac{2\pi N}{60} = \frac{2\pi \times 120}{60} = 12.57 \text{ rad/s}$$

$$v_{max} = \frac{h}{2}\frac{\pi\omega}{\varphi_a} \qquad \text{[refer Eq. (7.3)]}$$

or

$$v_{max} = \frac{30}{2} \times \frac{\pi \times 12.57}{150 \times \frac{\pi}{180}} = 226.3 \text{ mm/s}$$

$$f_{max} = \frac{h}{2}\left(\frac{\pi\omega}{\varphi_a}\right)^2 \qquad \text{[refer Eq. (7.5)]}$$

or

$$f_{max} = \frac{30}{2} \times \left(\frac{\pi \times 12.57}{150 \times \frac{\pi}{180}}\right)^2$$

$= 3413$ mm/s^2 or $\underline{3.413 \text{ m/s}^2}$

During desent

$$v_{max} = h\frac{\omega}{\varphi_d} \qquad \text{[refer Eq. (7.10)]}$$

$$v_{max} = 30 \times \frac{12.57}{100 \times \frac{\pi}{180}} = \underline{216 \text{ mm/s}}$$

$f_{max} = f = 0$

Note that to draw the cam profile, it is not necessary that the interval δ_1 is taken in the displacement diagram. Also, the scales of φ_a and φ_d can be taken different and of any magnitudes.

Example 7.2 *A cam with a minimum radius of 25 mm is to be designed for a knife-edge follower with the following data:*

- *To raise the follower through 35 mm during 60° rotation of the cam*
- *Dwell for next 40° of the cam rotation*
- *Descending of the follower during the next 90° of the cam rotation*
- *Dwell during the rest of the cam rotation*

Draw the profile of the cam if the ascending and descending of the cam is with simple harmonic motion and the line of stroke of the follower is offset 10 mm from the axis of the cam shaft.

What is the maximum velocity and acceleration of the follower during the ascent and the descent if the cam rotates at 150 rpm?

Solution

$h = 35$ mm $\qquad \varphi_a = 60°$

$N = 150$ rpm $\qquad \delta_1 = 40°$

$r_c = 25$ mm $\qquad \varphi_d = 90°$

$x = 10$ mm

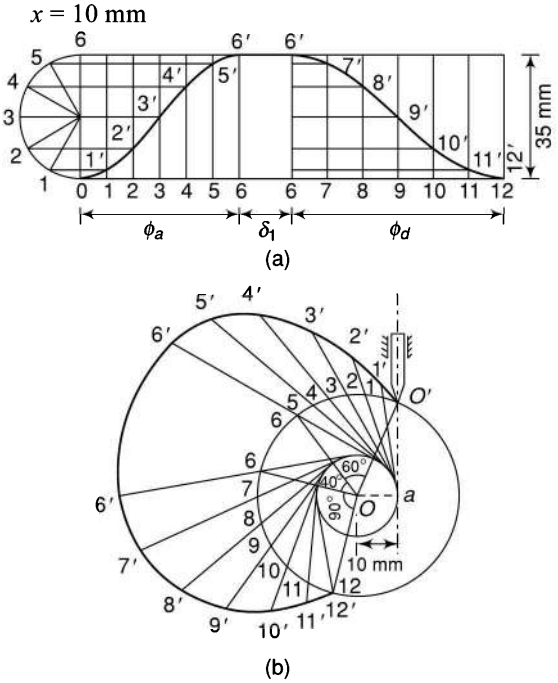

Fig. 7.24

Draw the displacement diagram of the follower as discussed earlier [Fig. 7.24(a)]. Construct the cam profile as follows [refer Fig. 7.24(b)]:

(i) Draw a circle with radius r_c (= 25 mm).

(ii) Draw another circle concentric with the previous circle with radius x (= 10 mm). If the cam is assumed stationary, the follower will be tangential to this circle in all the positions. Let the initial position be a-O'.

(iii) Join O-O'. Divide the circle of radius r_c into four parts as usual with angles φ_a, δ_1, φ_d and δ_2 starting from O-O'.

(iv) Divide the angles φ_a and φ_d into same number of parts as is done in the displacement diagram and obtain the points 1, 2, 3, etc., on the circumference of circle with radius r_c.

(v) Draw tangents to the circle with radius x from the points 1, 2, 3, etc.

(vi) On the extension of the tangent lines, mark the distances from the displacement diagram.

(vii) Draw a smooth curve through O',1′, 2′, etc. This is the required pitch curve.

During ascent $\quad \omega = \dfrac{2\pi \times 150}{60} = 5\pi \text{ rad/s}$

$$v_{max} = \frac{h}{2}\frac{\pi\omega}{\varphi_a} \qquad \text{[refer Eq. (7.3)]}$$

or $$v_{max} = \frac{35}{2} \times \frac{\pi \times 5\pi}{60 \times \frac{\pi}{180}} = \underline{824.7 \text{ mm/s}}$$

$$f_{max} = \frac{h}{2}\left(\frac{\pi\omega}{\varphi_a}\right)^2 \qquad \text{[refer Eq. (7.5)]}$$

or $$f_{max} = \frac{35}{2} \times \left(\frac{\pi \times 5\pi}{60 \times \frac{\pi}{180}}\right)^2$$

$$= 38\ 862 \text{ mm/s}^2 \text{ or } \underline{38.882 \text{ m/s}^2}$$

During descent

$$v_{max} = \frac{35}{2} \times \frac{\pi \times 5\pi}{90 \times \frac{\pi}{180}} = \underline{549.8 \text{ mm/s}}$$

$$f_{max} = \frac{35}{2} \times \left(\frac{\pi \times 5\pi}{90 \times \frac{\pi}{180}}\right)^2$$

$$= 17\ 272 \text{ mm/s}^2 \text{ or } 17.272 \text{ m/s}^2$$

Example 7.3 *A cam is to give the following motion to a knife-edged follower:*

- *To raise the follower through 30 mm with uniform acceleration and deceleration during 120° rotation of the cam*
- *Dwell for next 30° of the cam rotation*
- *To lower the follower with simple harmonic motion during the next 90° rotation of the cam*
- *Dwell for the rest of the cam rotation*

The cam has a minimum radius of 30 mm and rotates counter-clockwise at a uniform speed of 800 rpm. Draw the profile of the cam if the line of stroke of the follower passes through the axis of the cam shaft. Also, draw the displacement, velocity and the acceleration diagrams for the motion of the follower for one complete revolution of the cam indicating main values.

Solution

$h = 30$ mm, $r_c = 30$ mm, $\varphi_a = 120°$,
$\delta_1 = 30°$, $\varphi_d = 90°$, $N = 800$ rpm
$\delta_2 = 360° - 120° - 30° - 90° = 120°$

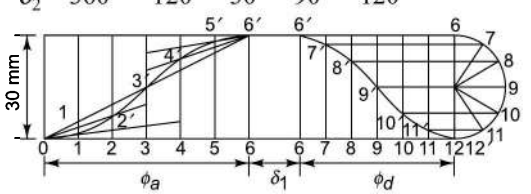

(a)

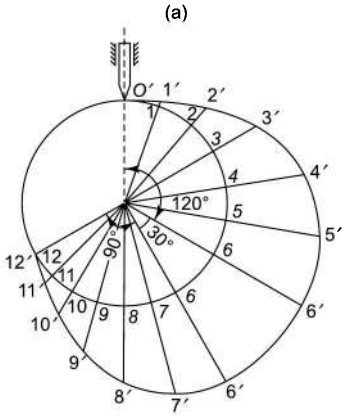

(b)

Fig. 7.25

Draw the displacement diagram of the follower as shown in Fig. 7.25(a). As the rotation of the cam shaft is counter-clockwise, the cam profile is to be drawn assuming the cam to be stationary and the follower rotating clockwise about the cam. Construct the cam profile as described below [Fig. 7.25(b)]:

(i) Draw a circle with radius r_c.

(ii) From the vertical position, mark angles φ_a, δ_1, φ_d and δ_2 in the clockwise direction.

(iii) Divide the angles φ_a and φ_d into same number of parts as is done in the displacement diagram. In this case, φ_a as well as φ_d have been divided into 6 equal parts.

(iv) On the radial lines produced, mark the distances from the displacement diagram.

(v) Draw a smooth curve tangential to end points of all the radial lines to obtain the required cam profile.

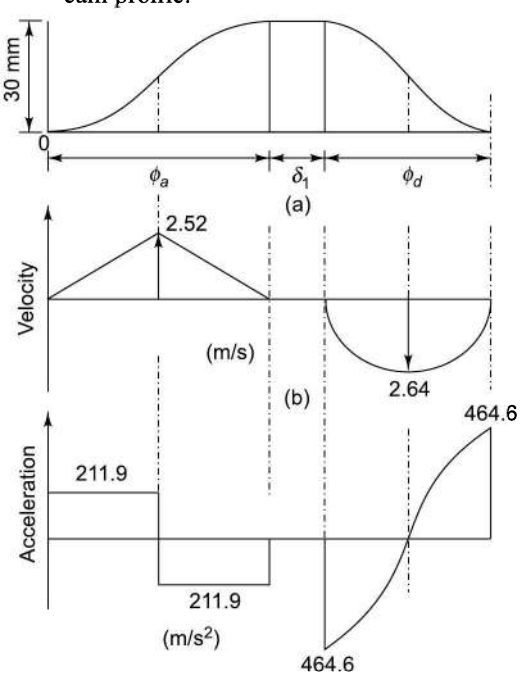

Fig. 7.26

The displacement diagram is reproduced in Fig. 7.26(a). The velocity and acceleration diagrams are to be drawn below this figure.

$$\omega = \frac{2\pi \times 840}{60} = 88 \text{ rad/s}$$

During ascent

During the ascent period, the acceleration and the deceleration are uniform. Thus, the velocity is linear and is given by

$$v = \frac{4h\omega}{\varphi_a^2}.\theta \qquad \text{[Eq. (7.7a)]}$$

The maximum velocity is at the end of the acceleration period, i.e., when $\theta = \varphi_{a/2}$.

$$\therefore \quad v_{\max} = 2h\frac{\omega}{\varphi_a}$$

$$= 2 \times 0.03 \times \frac{88}{120\pi/180} = \underline{2.52 \text{ m/s}}$$

The plot of velocity variation during the ascent period is shown in Fig. 7.26(b).

$$f_{\text{uniform}} = \frac{4h\omega^2}{\varphi_a^2} \qquad \text{[Eq. (7.6a)]}$$

$$\text{or} \quad f_{\text{uniform}} = \frac{4 \times 0.03 \times 88^2}{(120\pi/180)^2} = 211.9 \text{ m/s}^2$$

This has been shown in Fig. 7.26(c).

During descent

During descent, it is simple harmonic motion. The variation of velocity is give by

$$v = \frac{h}{2}\frac{\pi\omega}{\varphi_d}\sin\frac{\pi\theta}{\varphi_d} \qquad \text{[Eq. (7.2)]}$$

Maximum value is at $\theta = \varphi_d/2$,

$$v_{\max} = \frac{h}{2}\frac{\pi\omega}{\varphi_d}$$

$$\therefore \quad = \frac{0.03}{2} \times \frac{\pi \times 88}{90\pi/180} = 2.64 \text{ mm/s}$$

The plot of velocity variation during the descent period is shown in Fig. 7.26(b).

The acceleration variation is given by,

$$f = \frac{h}{2}\left(\frac{\pi\omega}{\varphi}\right)^2 \cos\frac{\pi\theta}{\varphi} \qquad \text{[Eq. (7.4)]}$$

It is maximum at $\theta = 0$, i.e.,

$$f_{\max} = \frac{h}{2}\left(\frac{\pi\omega}{\varphi_d}\right)^2$$

$$= \frac{0.03}{2} \times \left(\frac{\pi \times 88}{90\pi/180}\right)^2 = \underline{464.6 \text{ m/s}^2}$$

This variation is shown in Fig. 7.26(c).

Example 7.4 *Draw the profile of a cam operating a roller reciprocating follower and with the following data:*

Minimum radius of cam = 25 mm
Lift = 30 mm
Roller diameter = 15 mm

The cam lifts the follower for 120° with SHM followed by a dwell period of 30°. Then the follower lowers down during 150° of the cam rotation with uniform acceleration and deceleration followed by a dwell period. If the cam rotates at a uniform speed of 150 rpm, calculate the maximum velocity and acceleration of the follower during the descent period.

Solution:

$h = 30$ mm	$\varphi_a = 120°$
$N = 150$ mm	$\delta_1 = 30°$
$r_c = 25$ mm	$\varphi_d = 150°$
$r_r = 7.5$ mm	$\delta_2 = 60°$

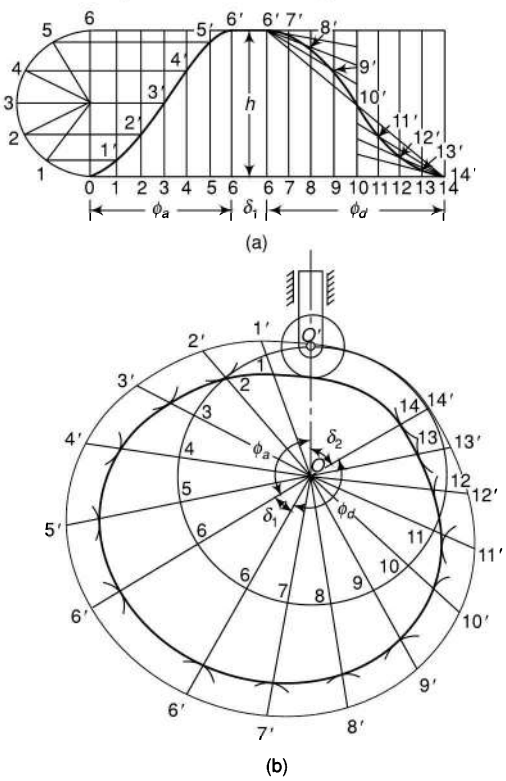

Fig. 7.27

Draw the displacement diagram of the follower as shown in Fig. 7.27(a). Construct the cam profile as described below [Fig. 7.27(b)].

(i) Draw a circle with radius $(r_c + r_r)$.

(ii) From the vertical position, mark angles φ_a, δ_1, φ_d and δ_2 in the counter-clockwise direction (assuming that the cam is to rotate in the clockwise direction).

(iii) Divide the angles φ_a and φ_d into the same number of parts as is done in the displacement diagram. In this case, φ_a has been divided into 6 equal parts whereas φ_d is divided into 8 equal parts.

(iv) On the radial lines produced, mark the distances from the displacement diagram.

(v) Draw a series of arcs of radii equal to r_r, as shown in the diagram from the points 1′, 2′, 3′, etc.

(vi) Draw a smooth curve tangential to all the arcs which is the required cam profile.

During the descent period, the acceleration and the deceleration are uniform. Therefore, the maximum velocity is at the end of the acceleration period.

$$v_{\max} = 2h\frac{\omega}{\varphi_d} \qquad \text{Eq. (7.8)}$$

or

$$v_{\max} = 2 \times 30 \times \frac{\dfrac{2\pi \times 150}{60}}{150 \times \dfrac{\pi}{180}} = \underline{360 \text{ m/s}}$$

$$f_{\max} = f_{\text{uniform}} = \frac{4h\omega^2}{\varphi_d^2} \qquad \text{Eq. (7.6)}$$

$$f_{\max} = \frac{4 \times 30 \times \left(\dfrac{2\pi \times 150}{60}\right)^2}{\left(150 \times \dfrac{\pi}{180}\right)^2} = 4320 \text{ mm/s}^2$$

or $\underline{4.32 \text{ m/s}^2}$

Example 7.5 *The following data relate to a cam profile in which the follower moves with uniform acceleration and deceleration during ascent and descent.*

Minimum radius of cam = 25 mm
Roller diameter = 7.5 mm
Lift = 28 mm
Offset of follower axis = 12 mm towards right
Angle of ascent = 60°
Angle of descent = 90°
Angle of dwell between ascent and descent = 45°
Speed of the cam = 200 rpm

Draw the profile of the cam and determine the maximum velocity and the uniform acceleration of the follower during the outstroke and the return stroke.

Solution:

$h = 28$ mm $\quad \varphi_a = 60°$
$r_c = 25$ mm $\quad \delta_1 = 45°$
$r_r = 7.5$ mm $\quad \varphi_d = 90°$
offset, $x = 12$ mm $\quad \delta_2 = (360° - 60° - 45° - 90°)$
$N = 200$ mm $\quad = 165°$

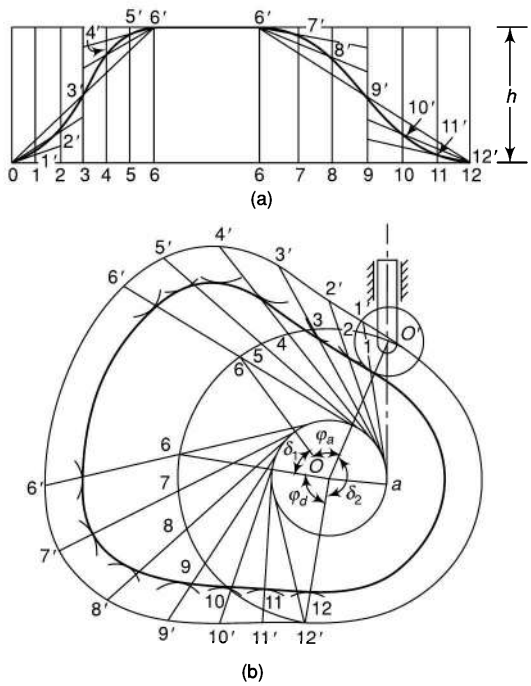

Fig. 7.28

From the given data, construct the displacement diagram as usual [Fig. 7.28(a)]. For the cam profile [Fig. 7.28(b)], the procedure is as follows:

(i) Draw a circle with radius $(r_c + r_r)$.

(ii) Draw another circle concentric with the previous circle with radius x. If the cam is assumed stationary, the follower will be tangential to this circle in all the positions. Let the initial position be a-O'.

(iii) Join O-O'. Divide the circle of radius $(r_c + r_r)$ into four parts as usual with angles φ_a, δ_1, φ_d and δ_2 starting from O-O'.

(iv) Divide the angles φ_a and φ_d into same number of parts as is done in the displacement diagram and obtain the points 1, 2, 3, etc., on the circumference of circle with radius $(r_c + r_r)$.

(v) Draw tangents to the circle with radius x from the points 1, 2, 3, etc.

(vi) On the extension of the tangent lines, mark the distances from the displacement diagram.

(vii) Draw a smooth curve through O',1′, 2′, etc. This is the pitch curve.

(viii) With 1′, 2′, 3′, etc., as centres, draw a series of arcs of radii equal to r_r.

(ix) Draw a smooth curve tangential to all the arcs and obtain the required cam profile.

During outstroke

$$\omega = \frac{2\pi \times 200}{60} = 20.94 \text{ rad/s}$$

$$v_{\max} = 2h\frac{\omega}{\varphi_a}$$

$$= 2 \times 28 \times \frac{20.94}{60 \times \pi / 180}$$

$$= 1120 \text{ mm/s or } 1.12 \text{ m/s}$$

$$f_{\text{uniform}} = \frac{4h\omega^2}{\varphi_a^2}$$

$$= \frac{4 \times 28 \times (20.94)^2}{\left(60 \times \frac{\pi}{180}\right)^2}$$

$$= 44\,800 \text{ mm/s}^2 \text{ or } 44.8 \text{ m/s}^2$$

During return stroke

$$v_{\max} = \frac{2h\omega}{\varphi_d}$$

$$= \frac{2 \times 28 \times 20.94}{90 \times \pi / 180}$$

$$= 747 \text{ mm/s or } 0.747 \text{ m/s}$$

$$f_{\text{uniform}} = \frac{4 \times 28 \times (20.94)^2}{\left(90 \times \frac{\pi}{180}\right)^2}$$

$$= 19\,900 \text{ mm/s}^2 \text{ or } 19.9 \text{ m/s}^2$$

Example 7.6 *A flat-faced mushroom follower is operated by a uniformly rotating cam. The follower is raised through a distance of 25 mm in 120° rotation of the cam, remains at rest for the next 30° and is lowered during further 120° rotation of the cam. The raising of the follower takes place with cycloidal motion and the lowering with uniform acceleration and deceleration. However, the uniform acceleration is 2/3 of the uniform deceleration. The least radius of the cam is 25 mm which rotates at 300 rpm.*

Draw the cam profile and determine the values of the maximum velocity and maximum acceleration during rising, and maximum velocity and uniform acceleration and deceleration during lowering of the follower.

Solution:

$h = 25$ mm	$\varphi_a = 120°$
$r_c = 25$ mm	$\delta_1 = 30°$
$N = 300$ mm	$\varphi_d = 120°$
	$\delta_2 = 90°$

During the return stroke, as the uniform acceleration is 2/3 of the uniform deceleration, the uniform deceleration is 3/2 of the uniform acceleration.

Let the uniform acceleration be f so that the uniform deceleration be $(3/2)f$.

Time of acceleration

Final velocity,

$v = u + ft = ft$ (initial velocity is zero)

or $\quad t = \dfrac{v}{f}$

Time of deceleration

Initial velocity is v and final velocity zero.

Therefore,

$0 = v - (3/2)\,ft'$

where t' is the time of deceleration and negative sign due to deceleration.

or $$t' = \frac{2}{3} \cdot \frac{v}{f}$$

Thus, the time of deceleration is 2/3 of the time of acceleration.

Displacement

During acceleration, $$s = ut + \frac{1}{2} ft^2$$

$$= \frac{1}{2} ft^2 \qquad \text{(i)}$$

During deceleration

$$= ft\left(\frac{2}{3} t\right) - \frac{1}{2}\left(\frac{3}{2} f\right)\left(\frac{2}{3} t\right)^2$$

[as initial velocity ft and time taken $(2/3)t$]

$$= \frac{2}{3} ft^2 - \frac{1}{3} ft^2$$

$$= \frac{2}{3}\left(\frac{1}{2} ft^2\right) \qquad \text{(ii)}$$

Comparison of (i) and (ii), shows that the distance travelled during deceleration period is 2/3 of the distance travelled during acceleration.

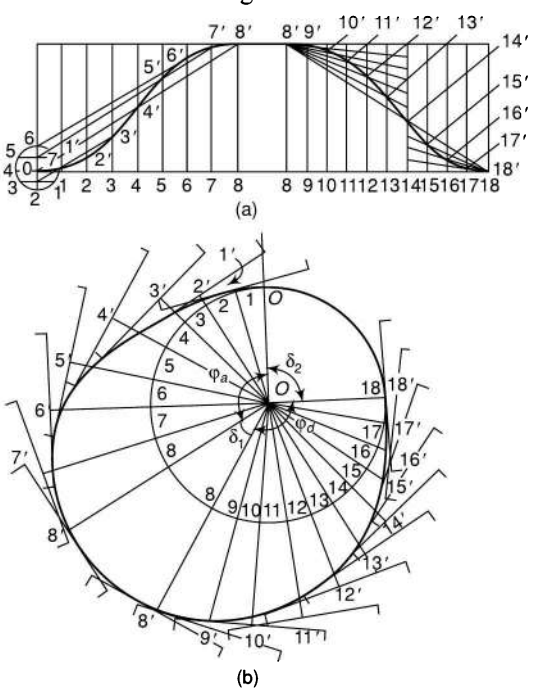

Fig. 7.29

The displacement diagram has been shown in Fig. 7.29(a). Note that during the return stroke, the time of acceleration and the displacement are 3/2 times of the corresponding values during the deceleration. (Time is measured along the x-axis and displacement along the y-axis). Thus, the time of acceleration is 3/5 of the total time of return and the displacement is 3/5 of the total displacement.

To draw the cam profile, proceed as follows [Fig. 7.29(b)]:

(i) Draw a circle with radius r_c.

(ii) Take angles φ_a, δ_1, φ_d, and δ_2 as before (in the counter-clockwise direction if the cam rotation is assumed clockwise).

(iii) Divide φ_a and φ_d into same number of parts as in the displacement diagram.

(iv) Draw radial lines and on them mark the distances 1-1′, 2-2′, 3-3′, etc.

(v) Draw the follower in all the positions by drawing perpendiculars to the radial lines at 1′, 2′, 3′, etc. In all the positions, the axis of the follower passes through the centre O.

(vi) Draw a curve tangential to the flat-faces of the follower representing the cam profile.

Remember that in case of mushroom followers, the contact point will rarely lie on the axis of the follower.

During ascent

$$v_{max} = \frac{2h\omega}{\varphi_a} \qquad \text{Eq. (7.14)}$$

where $$\omega = \frac{2\pi \times 300}{60} = 31.4 \text{ rad/s}$$

$$v_{max} = \frac{2 \times 25 \times 31.4}{120 \times \pi / 180} = 750 \text{ mm/s or } 0.75 \text{ m/s}$$

$$f_{max} = \frac{2h\pi\omega^2}{\varphi_a^2} \qquad \text{Eq. (7.16)}$$

$$f_{max} = \frac{2 \times 25 \times \pi \times (31.4)^2}{(120 \times \pi / 180)^2}$$

$$= 35\,310 \text{ mm/s}^2 \text{ or } \underline{35.31 \text{ m/s}^2}$$

During descent

$$v = ft \qquad \text{Eq. (7.7)}$$

or $$v = \left(\frac{2s}{t^2}\right) t = \frac{2s}{t} \qquad \text{[Refer Eq. (7.6)]}$$

v will be maximum at the end of the acceleration period. At the end of the acceleration period,

$$s = \frac{3}{5} \times 25 = 15 \text{ mm}$$

and the time taken to travel this distance is found as under,

Time for 300 rev. = 60 s

$$\text{Time for 1 rev. } (= 360°) = \frac{60}{300} = 0.2 \text{ s}$$

$$\text{Time for } \left(\frac{3}{5} \times 120°\right) = \frac{0.2}{360} \times 72 = 0.04 \text{ s}$$

$$v_{max} = \frac{2 \times 15}{0.04} = \underline{750 \text{ mm/s}^2} \text{ or } \underline{0.075 \text{ m/s}^2}$$

Uniform acceleration

$$= \frac{v_{max}}{\text{time}} = \frac{0.75}{0.04} = \underline{18.75 \text{ m/s}^2}$$

Uniform deceleration

$$= 18.75 \times \frac{3}{2} = \underline{28.13 \text{ m/s}^2}$$

Example 7.7 *The following data relate to a cam operating an oscillating roller follower:*

Minimum radius of cam	=	*44 mm*
Diameter of roller	=	*14 mm*
Length of the follower arm	=	*40 mm*
Distance of fulcrum centre from cam centre	=	*50 mm*
Angle of ascent	=	*75°*
Angle of descent	=	*105°*
Angle of dwell for follower in the highest position	=	*60°*
Angle of oscillation of follower	=	*28°*

Draw the profile of the cam if the ascent and descent both take place with SHM.

Solution:

r_c = 22 mm $\qquad \theta = 28°$

r_r = 7 mm $\qquad \varphi_a = 75°$

Follower arm length = 40 mm $\qquad \delta_1 = 60°$

$h = \theta \times$ arm length $\qquad \varphi_d = 105°$

$$= \left(28° \times \frac{\pi}{180°}\right) \times 40 \qquad \delta_2 = 120°$$

= 19.5 mm

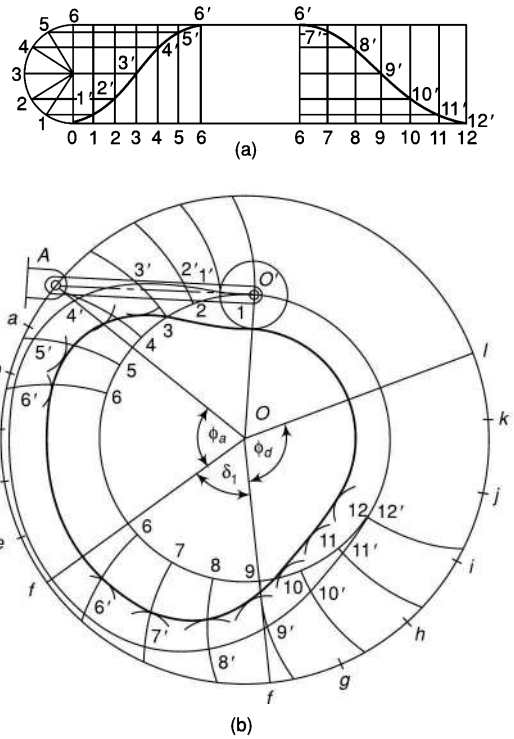

Fig. 7.30

The displacement diagram has been shown in Fig. 7.30(a). To draw the cam profile, proceed as follows:

(i) Draw a circle with radius (r_c + r_r) [Fig. 7.30(b)].

(ii) Assuming the initial position of the roller centre vertically above the cam centre O, locate the fulcrum centre as its distances from the cam centre and the roller centre (equal to length of follower arm) arc known.

(iii) Draw a circle with radius OA and centre at O.

(iv) On the circle through A, starting form OA, take angles φ_a, δ_1 and φ_d, as usual.

(v) Divide the angles φ_a and φ_d into same number of parts as is done in the displacement diagram and obtain the points a, b, c, d, etc., on this circle through A.

(vi) With centres A, a, b, etc., draw arcs with radii equal to length of the arm.

(vii) Mark distances 1-1′, 2-2′, 3-3′, etc., on

these arcs as shown in the diagram. It is on the assumption that for small angular displacements, the linear displacements on the arcs and on the straight lines are the same.

(viii) With 1′, 2′, 3′, etc., draw a series of arcs of radii equal of r_r.

(ix) Draw a smooth curve tangential to all the arcs and obtain the required cam profile.

7.10 CAMS WITH SPECIFIED CONTOURS

It is always desired that a cam is made to provide a smooth motion of the follower and for that a follower motion programme is always selected first. However, sometimes it becomes difficult to manufacture the cams in large quantities of the specified contours. Under such circumstances, it becomes necessary that the cam is designed first and then some improvements are made in that if possible. Such cams are generally made up of some combination of curves such as straight lines, circular arcs, etc. In the present section, some cams with specified contours are analysed.

1. Tangent Cam (with Roller Follower)

A tangent cam is symmetrical about the centre line. It has straight flanks (such as AK in Fig. 7.31) with a circular nose. The centre of the cam is at O and that of the nose at Q. A tangent cam is used with a roller cam since there is no meaning of using flat-faced followers with straight flanks.

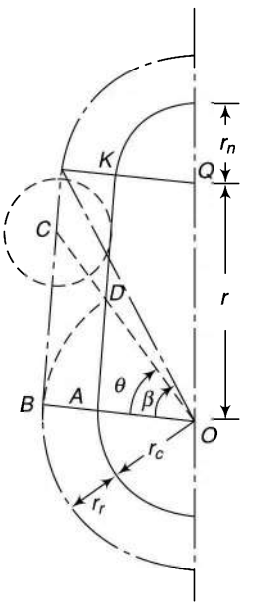

Fig. 7.31

Let
r_c = least radius of cam
r_n = radius of nose
r_r = radius of roller
r = distance between the cam and the nose centres.

Roller on the Flank When the roller is on the straight flank, the centre of the roller is at C on the pitch profile as shown in Fig. 7.31.

Let θ = angle turned by the cam from the beginning of the follower motion

Let,
$$x = OC - OD = OC - OB = \frac{OB}{\cos\theta} - OB = OB\left(\frac{1}{\cos\theta} - 1\right)$$

or
$$x = (r_c + r_r)\left(\frac{1}{\cos\theta} - 1\right) \tag{7.17}$$

$$v = \frac{dx}{dt} = \frac{dx}{d\theta}\frac{d\theta}{dt} = (r_c + r_r)\left(\frac{\sin\theta}{\cos^2\theta} - 0\right)\omega$$

$$= \omega\,(r_c + r_r)\frac{\sin\theta}{\cos^2\theta} \tag{7.18}$$

$\sin\theta$ increases with the increase in θ whereas $\cos\theta$ decreases. Hence the velocity increases with θ and it is maximum when θ is maximum. This will happen when the point of contact leaves the straight flank.

Let β = angle turned by the cam when the roller leaves the flank.

$$\therefore \quad v_{max} = \omega\,(r_c + r_r)\frac{\sin\beta}{\cos^2\beta} \text{ and } v_{min} = 0 \text{ at } \theta = 0$$

$$f = \frac{dv}{dt} = \frac{dv}{d\theta} \times \frac{d\theta}{dt}$$

$$= \omega\,(r_c + r_r)\left[\frac{\cos^2\theta\cos\theta - \sin\theta\,(-2\sin\theta\cos\theta)}{\cos^4\theta}\right]\omega$$

$$= \omega^2\,(r_c + r_r)\left[\frac{\cos^2\theta + 2\sin^2\theta}{\cos^3\theta}\right]$$

$$= \omega^2\,(r_c + r_r)\left[\frac{2(\cos^2\theta + \sin^2\theta) - \cos^2\theta}{\cos^3\theta}\right] \tag{7.19}$$

$$= \frac{\omega^2\,(r_c + r_r)\;(2 - \cos^2\theta)}{\cos^3\theta}$$

Acceleration is minimum when $\dfrac{2 - \cos^2\theta}{\cos^3\theta}$ is minimum, i.e., when $(2 - \cos^2\theta)$ is minimum and $\cos^3\theta$ is maximum or when $\cos\theta$ is maximum.

This is possible when $\theta = 0°$ or when the roller touches the straight flank.

$$f_{\min} = \omega^2\,(r_c + r_r) \tag{7.20}$$

Roller on the Nose Let the centre of the roller be at the point C on the pitch profile over the nose. Let QN be the perpendicular to OC (Fig. 7.32).

$$x = OC - OD$$

$$= (ON + NC) - OB$$

$$= OQ\cos\varphi + CQ\cos\psi - OB$$

$$= OQ\cos\varphi + CQ\sqrt{1 - \sin^2\psi} - OB$$

$$= OQ\cos\varphi + CQ\sqrt{1 - \frac{(NQ)^2}{(CQ)^2}} - OB$$

$$= r\cos(\alpha - \theta) + \sqrt{l^2 - r^2\sin^2(\alpha - \theta)} - n \tag{7.21}$$

where $l = CQ = r_n + r_r$

and $n = OB = r_c + r_r$

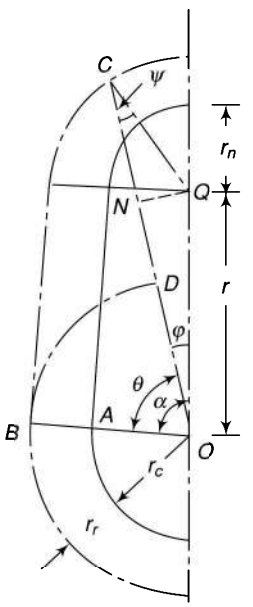

Fig. 7.32

$$v = \frac{dx}{dt} = \frac{dx}{d\theta}\,\frac{d\theta}{dt}$$

$$= \left[\frac{d}{d\theta}\{r\cos(\alpha - \theta) + \sqrt{(l^2 - r^2\sin^2(\alpha - \theta))} - n\}\right]\omega$$

$$= \omega\left[-r\sin(\alpha - \theta)(-1) + \frac{1}{2}\,\frac{r^2\,2\sin(\alpha - \theta)\cos(\alpha - \theta)}{\sqrt{(l^2 - r^2\sin^2(\alpha - \theta))}}\right]$$

$$= \omega r\left[\sin(\alpha - \theta) + \frac{r\sin 2(\alpha - \theta)}{2\sqrt{(l^2 - r^2\sin^2(\alpha - \theta))}}\right] \tag{7.22}$$

$$f = \frac{dv}{dt} = \frac{dv}{d\theta}\frac{d\theta}{dt} = \omega r \frac{d}{d\theta}\left[\sin(\alpha-\theta) + \frac{r}{2}\frac{\sin 2(\alpha-\theta)}{\sqrt{(l^2 - r^2\sin^2(\alpha-\theta))}}\right]\omega$$

$$= \omega^2 r \frac{d}{d\theta}\left[\sin(\alpha-\theta) + \frac{\omega^2 r^2}{2}\frac{d}{d\theta}[\sin 2(\alpha-\theta)]\{l^2 - r^2\sin^2(\alpha-\theta)\}^{-1/2}\right]$$

$$= \omega^2 r[\cos(\alpha-\theta)(-1)] + \frac{\omega^2 r^2}{2}[\sin 2(\alpha-\theta)\left(-\frac{1}{2}\right)$$

$$\{l^2 - r^2\sin^2(\alpha-\theta)\}^{-3/2}(-r^2)\{2\sin(\alpha-\theta)\cos(\alpha-\theta)(-1)\}$$
$$+\{l^2 - r^2\sin^2(\alpha-\theta)\}^{-1/2}2\cos 2(\alpha-\theta)(-1)]$$

$$= \omega^2 r\left[-\cos(\alpha-\theta) - \frac{r^3\sin^2 2(\alpha-\theta)}{4[l^2 - r^2\sin^2(\alpha-\theta)]^{3/2}} - \frac{r\cos 2(\alpha-\theta)}{\sqrt{l^2 - r^2\sin^2(\alpha-\theta)}}\right] \quad (7.23)$$

2. Circular Arc (Convex) Cam (with Flat-faced Follower)

A circular arc cam is made up of three arcs of different radii (Fig. 7.33). In such cams, the acceleration may change abruptly at the blending points due to instantaneous change in the radius of curvature.

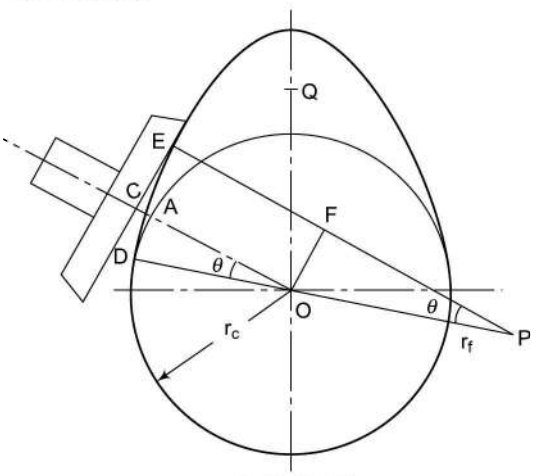

Fig. 7.33

Follower Touching Circular Flank When the flat-faced follower touches point E on the circular flank, it is lifted through a distance AC.

Let P be the centre of the circular arc of the flank and r_f the radius of the circular flank (= $PD = PE$).

$$x = OC - OA = EF - OA = (PE - PF) - OA$$
$$= PE - OP\cos\theta - OA$$
$$= PE - (PD - OD)\cos\theta - OA$$

or

$$x = r_f - (r_f - r_c)\cos\theta - r_c$$
$$= r_f - r_f\cos\theta + r_c\cos\theta - r_c$$
$$= r_f(1 - \cos\theta) - r_c(1 - \cos\theta)$$
$$= (r_f - r_c)(1 - \cos\theta) \quad (7.24)$$

$$v = \frac{dx}{dt} = \frac{dx}{d\theta}\frac{d\theta}{dt}$$
$$= [(r_f - r_c)(\sin\theta)]\omega$$
$$= \omega(r_f - r_c)\sin\theta \quad (7.25)$$

It is zero when $\theta = 0$, i.e., when the follower starts ascending. It increases with θ and is maximum when θ is maximum or when the follower leaves the flank and $\theta = \beta$.

$$v_{max} = \omega(r_f - r_c)\sin\beta$$

$$f = \frac{dv}{dt} = \frac{dv}{d\theta}\frac{d\theta}{dt} = \left[(r_f - r_c)\cos\theta\right]\omega = \omega^2(r_f - r_c)\cos\theta \quad (7.26)$$

It is maximum at the beginning when $\theta = 0$, i.e when the rise commences.

$$f_{\max} = \omega^2 (r_f - r_c)$$

$$f_{\min} = \omega^2 (r_f - r_c) \cos \beta$$

Follower on the Nose (Fig. 7.34)

$$x = OC - OA = EF - OA$$

$$= QE + QF - OA$$

$$= QE + OQ \cos\varphi - OA$$

$$= r_n + r \cos (\alpha - \theta) - r_c$$

$$= r_n - r_c + r \cos (\alpha - \theta) \qquad (7.27)$$

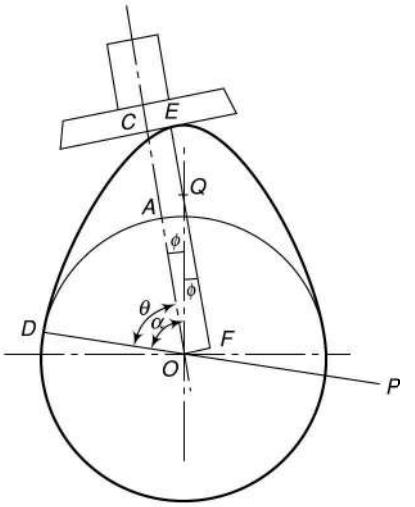

Fig. 7.34

$$v = \frac{dx}{dt} = \frac{dx}{d\theta}\frac{d\theta}{dt}$$

$$= [r \sin (\alpha - \theta)]\omega$$

$$= \omega r \sin (\alpha - \theta) \qquad (7.28)$$

It is maximum when $(\alpha - \theta)$ is maximum, i.e when θ is maximum or when the follower just touches the nose of the cam.

Velocity is minimum when $(\alpha - \theta)$ is minimum or when θ is maximum, i.e., when the follower is at the apex of the circular nose or $\theta = \alpha$.

$$f = \frac{dv}{dt} = \frac{dv}{d\theta}\frac{d\theta}{dt} = \omega r \cos (\alpha - \theta)(-1)\omega = -\omega^2 r \cos (\alpha - \theta) \qquad (7.29)$$

i.e., it is retardation. It is maximum when $(\alpha - \theta)$ is minimum or when θ is maximum or when the follower is at the apex of the nose.

Similarly, it is minimum at the commencement of the nose travel.

3. Circular Arc (Convex) Cam (with Roller Follower)

Follower on the Flank (Fig. 7.35)

$$x = OC - OA = FC - FO - OB$$

$$= CP \cos\varphi - OP \cos \theta - OB$$

$$= CP \cos\varphi - (DP - DO) \cos \theta - OB$$

or $$x = (r_f + r_r) \cos \varphi - (r_f + r_c) \cos \theta - (r_c + r_r)$$

where, $\cos\varphi$ is given by,

$$\cos \varphi = \sqrt{1 - \sin^2 \varphi}$$

$$= \sqrt{1 - (FP / CP)^2}$$

$$= \sqrt{1 - \left(\frac{OP \sin \theta}{CP}\right)^2}$$

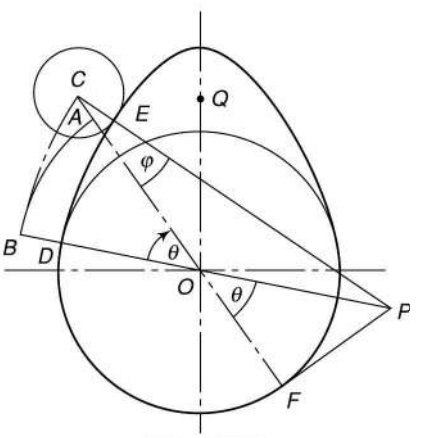

Fig. 7.35

$$= \sqrt{1 - \left[\frac{(r_f - r_c)\sin\theta}{(r_f + r_r)}\right]^2}$$

or $$\cos\varphi = \sqrt{1 - \left(\frac{A\sin\theta}{B}\right)^2} = \frac{1}{B}\sqrt{B^2 - A^2\sin^2\theta}$$

where $A = r_f - r_c$ and $B = r_f + r_r$

$$x = \sqrt{B^2 - A^2\sin^2\theta} - A\cos\theta - (r_c + r_r) \tag{7.30}$$

$$v = \frac{dx}{dt} = \frac{dx}{d\theta}\frac{d\theta}{dt} = \left[\frac{1}{2}(B^2 - A^2\sin^2\theta)^{-1/2}(-A^2 2\sin\theta\cos\theta) + A\sin\theta)\right]\omega$$

$$= \omega A\left[\sin\theta - \frac{A\sin 2\theta}{2\sqrt{B^2 - A^2\sin^2\theta}}\right] \tag{7.31}$$

$$f = \frac{dv}{dt} = \frac{dv}{d\theta}\frac{d\theta}{dt}$$

$$= \omega^2 A\left[\cos\theta - \frac{A}{2}\left\{\frac{2\cos 2\theta}{\sqrt{B^2 - A^2\sin^2\theta}} + \sin 2\theta\left(-\frac{1}{2}\right)(B^2 - A^2\sin^2\theta)^{-3/2}(-A^2)\,(2\sin\theta\cos\theta)\right\}\right]$$

$$= \omega^2 A\left[\cos\theta - \frac{A\cos 2\theta}{\sqrt{B^2 - A^2\sin^2\theta}} - \frac{A^3\sin 2\theta}{4(B^2 - A^2\sin^2\theta)^{3/2}}\right] \tag{7.32}$$

Follower on the Nose This case has already been discussed for the tangent cam when the roller follower is on the nose. Same expressions for the displacement, velocity and the acceleration hold good.

Example 7.8 *A tangent cam with straight working faces tangential to a base circle of 120 mm diameter has a roller follower of 48-mm diameter. The line of stroke of the roller follower passes through the axis of the cam. The nose circle radius of the cam is 12 mm and the angle between the tangential faces of the cam is 90°. If the speed of the cam is 180 rpm, determine the acceleration of the follower when*

(i) during the lift, the roller just leaves the straight flank

(ii) the roller is at the outer end of its lift, i.e., at the top of the nose

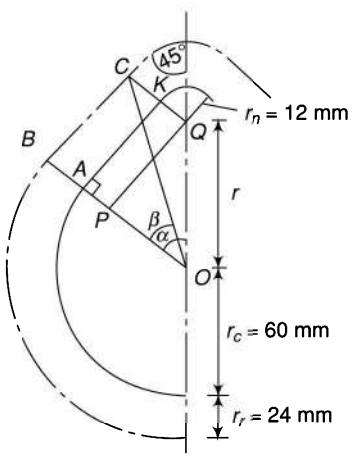

Fig. 7.36

Solution:

$r_c = 60$ mm $\quad r_n = 12$ mm

$r_r = 24$ mm $\quad N = 180$ rpm

$$\omega = \frac{2\pi \times 180}{60} = 6\pi \text{ rad/s}$$

Refer Fig. 7.36,

$$\alpha = (180° - 45° - 90°) = 45°$$

$$OA = OP + PA$$

$$= OQ \cos\alpha + QK$$

$$r_c = r\cos\alpha + r_n$$

$$60 = r\cos 45° + 12$$

$$r = 67.9 \text{ mm}$$

$$\tan\beta = \frac{BC}{OB} = \frac{PQ}{OB}$$

$$= \frac{r\sin\alpha}{r_c + r_r}$$

$$= \frac{67.9\sin 45°}{60+24}$$

$$= 0.571$$

$$\therefore \quad \beta = 29.74°$$

(i) Acceleration when the roller just leaves the straight flank,

$$f = \frac{\omega^2(r_c + r_r)\ (2-\cos^2\theta)}{\cos^3\theta}$$

$$= \frac{(6\pi)^2\ (0.06+0.024)\ (2-\cos^2 29.74°)}{\cos^3 29.74°}$$

$$= (6\pi)^2 \times 0.084 \times 1.9035 = \underline{56.8 \text{ m/s}^2}$$

(ii) Acceleration when the roller is at the outer end of its lift, i.e., at the top of the nose,

$\theta = \alpha$

$$f = \omega^2 r \left[\begin{array}{l} -\cos(\alpha-\theta) \\ -\dfrac{r^3\sin^2 2(\alpha-\theta)}{4\left[l^2 - r^2\sin^2(\alpha-\theta)\right]^{3/2}} \\ -\dfrac{r\cos 2(\alpha-\theta)}{\sqrt{l^2 - r^2\sin^2(\alpha-\theta)}} \end{array} \right]$$

$$= \omega^2 r\left[-1 - \frac{r}{l}\right]$$

$$= (6\pi)^2 \times 0.0679\left[-1 - \frac{0.0679}{0.036}\right]$$

$(l = r_r + r_n = 24 + 12 = 36 \text{ mm})$

$$= \underline{69.6 \text{ m/s}^2}$$

Example 7.9 *A tangent cam with a base circle diameter of 50 mm operates a roller follower 20 mm in diameter. The line of stroke of the roller follower passes through the axis of the cam. The angle between the tangential faces of the cam is 60°, speed of the cam shaft is 200 rpm and the lift of the follower is 15 mm. Calculate the*

(i) main dimensions of the cam

(ii) acceleration of the follower at

(a) the beginning of lift

(b) where the roller just touches the nose

(c) the apex of the circular nose

Solution:

$r_c = 25$ mm $\quad h = 15$ mm

$r_r = 10$ mm $\quad N = 200$ rpm

$\alpha = (180° - 30° - 90°) = 60°$

(i) Refer Fig.7.37.

$$r + r_n + r_r = r_c + r_r + h$$

$$r + r_n = r_c + h = 25 + 15 = 40 \qquad \text{(i)}$$

Also, $OP + r_n = r_c$

or $r\cos 60° + r_n = 25$

or $0.5\,r + r_n = 25 \qquad$ (ii)

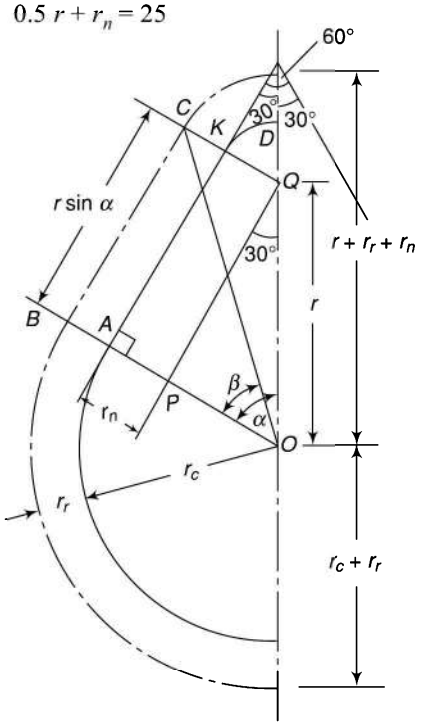

Fig. 7.37

Subtracting (ii) from (i),

$$r = 30 \text{ mm}$$
$$r_n = 10 \text{ mm}$$

$$\tan\beta = \frac{r\sin\alpha}{r_c + r_r}$$
$$= \frac{30\sin 60^\circ}{25+10} = 0.742$$
$$\therefore \quad \beta = 36.6^\circ \text{ or } 36^\circ 36'$$

(ii) Acceleration of the follower

$$\omega = \frac{2\pi \times 200}{60} = 20.94 \text{ rad/s}$$

(a) *At the beginning of Lift*, i.e., roller centre at B, $\theta = 0°$.

$$f = \frac{\omega^2 (r_c + r_r)\,(2 - \cos^2\theta)}{\cos^3\theta}$$
$$= \frac{(20.94)^2\,(0.025 + 0.01)\,(2 - \cos^2 0°)}{\cos^3 0°}$$
$$= \underline{15.35 \text{ m/s}^2}$$

(b) *The roller just touches the nose* ($\theta = \beta$), i.e., the roller centre at C.

When the contact is with straight flank, $\theta = 36.6° = \beta$

$$f = \frac{(20.94)^2\,(0.025 + 0.01)\,(2 - \cos^2 36.6°)}{\cos^3 36.6°}$$
$$= \underline{40.2 \text{ m/s}^2}$$

When the contact is on the circular nose,

$$l = r_n + r_r = 10 + 10 = 20 \text{ mm}$$

$$f = \omega^2 r \left[-\cos(\alpha - \theta) - \frac{r^3 \sin^2 2(\alpha - \theta)}{4\left[l^2 - r^2 \sin^2(\alpha - \theta)\right]^{3/2}} - \frac{r\cos 2(\alpha - \theta)}{\sqrt{l^2 - r^2\sin^2(\alpha - \theta)}} \right]$$

$$= (20.94)^2 (0.03)$$
$$\left[-\cos(60° - 36.6°) - \frac{(0.03)^3 \sin^2 2(60° - 36.6°)}{4\left[(0.02)^2 - (0.03)^2 \sin^2(60° - 36.6°)\right]^{3/2}} - \frac{(0.03)\cos 2(60° - 36.6°)}{\sqrt{(0.02)^2 - (0.03)^2 \sin^2(60° - 36.6°)}} \right]$$
$$= 13.15\,(-0.917 - 0.865 - 1.278) = \underline{-40.24 \text{ m/s}^2}$$

(c) *When the roller is at the apex of the circular nose*, i.e., at D, $\theta = \alpha$

and

$$f = \omega^2 r \left(-1 - \frac{r}{1}\right)$$
$$= (20.94)^2 \times 0.03 \left(-1 - \frac{0.03}{0.02}\right) = \underline{-32.9 \text{ m/s}^2}$$

Example 7.10 *The following data relate to a circular cam operating a flat-faced follower:*

Least diameter = 40 mm
Lift = 12 mm
Angle of action = 160°
Speed = 500 rpm

If the period of acceleration of the follower is 60° of the retardation during the lift, determine the

(i) main dimensions of the cam
(ii) acceleration at the main points

What is the maximum acceleration and deceleration during the lift?

Solution:

$r_c = 20$ mm $\quad h = 15$ mm
$2\alpha = 160°$ $\quad N = 500$ rpm
$\alpha = 80°$

During the lifting of the follower, the acceleration takes place when the follower is on the radial flank and the deceleration when the follower is on the nose. When the follower just touches the nose, the follower position will be as shown in Fig. 7.38. OC and PQE are parallel and the angles $\beta = 30°$ and $\varphi = 50°$ so that β is 60% of φ.

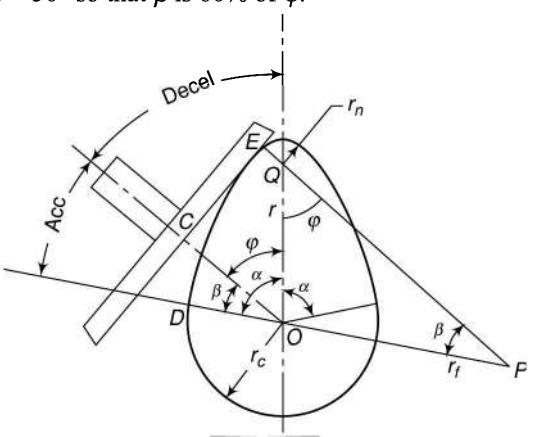

Fig. 7.38

(i) Apply sine rule to ΔPOQ,

$$\frac{OP}{\sin\varphi} = \frac{PQ}{\sin(180° - \alpha)} = \frac{OQ}{\sin\beta}$$

$$\frac{r_f - r_c}{\sin 50°} = \frac{r_f - r_n}{\sin 100°} = \frac{r}{\sin 30°}$$

But $\quad r + r_n = r_c + h$

or $\quad r = r_c + h - r_n$

$= 20 + 12 - r_n$

$= 32 - r_n$

$$\frac{r_f - 20}{\sin 50°} = \frac{r_f - r_n}{\sin 100°} = \frac{32 - r_n}{\sin 30°}$$

From first and last terms,

$0.5\, r_f - 10 = 24.51 - 0.766\, r_n$

$0.5\, r_f = 34.51 - 0.766\, r_n$

or $\quad r_f = 69.02 - 1.532\, r_n \qquad$ (i)

From second and last terms,

$0.5\, r_f - 0.5\, r_n = 31.51 - 0.985\, r_n$

$r_f = 63.02 - 0.97\, r_n \qquad$ (ii)

From (i) and (ii),

$69.02 - 1.532\, r_n = 63.02 - 0.97\, r_n$

$r_n = \underline{10.7 \text{ mm}}$

$r = 32.0 - 10.7 = \underline{21.3 \text{ mm}}$

$r_f = 69.02 - 1.532 \times 10.7 = \underline{52.6 \text{ mm}}$

(ii) Accelerations

(a) At the beginning of contact, $\theta = 0°$,

$$f = \omega^2 (r_f - r_c) \cos 0°$$

or $$f = \left(\frac{2\pi \times 500}{60}\right)^2 (52.6 - 20)$$

$= 2742 \times 32.6$

$= 89\,370 \text{ mm/s}^2$ or 89.37 m/s^2

(b) Contact on circular flank when $\theta = \beta = 30°$,

$f = 2742 \times 32.6 \cos 30° = 77\,410 \text{ mm/s}^2$ or 77.41 m/s^2

(c) Contact on circular nose, when $\theta = \beta = 30°$,

$f = -\omega^2 r \cos(\alpha - \theta) = -2742 \times 21.3 \cos(80° - 30°)$

$= -37\,540 \text{ mm/s}^2$ or -37.54 m/s^2

(d) Contact at the apex of nose, $\theta = \alpha = 80°$,

$f = -\omega^2 r \cos(80° - 80°) = -2742 \times 21.3$

$= -58\,400 \text{ mm/s}^2$ or -58.4 m/s^2

Maximum acceleration is when the contact is just made with the circular flank; it is 89.37 m/s^2 and the maximum retardation is at the end of the lifting period, i.e., when the contact is at the apex of the nose; it is 58.4 m/s^2.

Example 7.11 *The following data relate to a symmetrical circular cam operating a flat-faced follower:*

Minimum radius of the cam	*40 mm*
Lift	*24 mm*
Angle of lift	*75°*
Nose radius	*8 mm*
Speed of the cam	*420 rpm*

Determine the main dimensions of the cam and the acceleration of the follower at the

(i) beginning of the lift

(ii) end of contact with the circular flank

(iii) beginning of contact with the nose

(iv) apex of nose

Solution

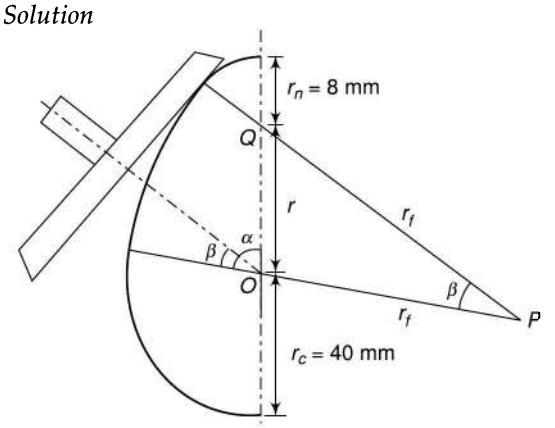

Fig. 7.39

$r_c = 40$ mm $\qquad N = 400$ rpm

$h = 24$ mm $\qquad r_n = 8$ mm

$\alpha = 75°$

$$\omega = \frac{2\pi \times 420}{60} = 44 \text{ rad/s}$$

Refer to Fig.7.39.

$r + r_n = r_c + h$

or $\quad r = 40 + 24 - 8 = 56$ mm

$(PQ)^2 = (OP)^2 + (OQ)^2 - 2(OP)(OQ) \cos \angle POQ$

$(r_f - 8)^2 = (r_f - 40)^2 + (56)^2 - 2(r_f - 40)(56) \cos (180° - 75°)$

$r_f^2 + 64 - 16r_f = r_f^2 + 1600 - 80r_f + 3136 + 29r_f - 1160$

$35\, r_f = 3512$

$r_f = 100.3$ mm

$OP = 100.3 - 40 = 60.3$ mm

$PQ = 100.3 - 8 = 92.3$ mm

Applying sine rule to ΔOPQ,

$$\frac{OQ}{\sin \beta} = \frac{PQ}{\sin (180° - \alpha)}$$

or $$\frac{r}{\sin \beta} = \frac{r_f - r_n}{\sin 105°}$$

or $$\frac{56}{\sin \beta} = \frac{100.3 - 8}{\sin 105°}$$

$\sin \beta = 0.586$

$\beta = 35.9°$

Acceleration when the follower is on the circular flank, $f = \omega^2 (r_f - r_c) \cos\theta$

(i) At the beginning of lift, $\theta = 0°$,

$f = \omega^2 (r_f - r_c) = 44^2 (100.3 - 40)$

$= 116\ 740$ mm/s^2 = <u>116.74 m/s^2</u>

(ii) At the end of contact with the circular flank,

$f = \omega^2 (r_f - r_c) \cos \theta = 44^2 (100.3 - 40) \cos 35.9° = 94\ 565$ mm/s^2 = <u>94.565 m/s^2</u>

Acceleration when the follower is on the nose, $f = -\omega^2 r \cos (\alpha - \beta)$

(iii) At the beginning of contact with the nose

$f = -\ \omega^2 r \cos (\alpha - \beta) = -44^2 \times 56 \times \cos (75° - 35.9°) = -84\ 136$ mm/s^2

or <u>–84.136 m/s^2</u>

(iv) At the apex of the nose, $\alpha = \beta$

$f = -\omega^2 r = -44^2 \times 56 = -108\ 416$ mm/s^2

or <u>– 108.416 m/s^2</u>

Example 7.12 *In a four-stroke petrol engine, the exhaust valve opens 45° before the t.d.c. and closes 15° after the b.d.c. The valve has a lift of 12 mm. The least radius of the circular-arc-type cam operating a flat-faced follower is 25 mm. The nose radius is 3 mm. The camshaft rotates at 1500 rpm. Calculate the maximum velocity of the valve and the minimum force exerted by the spring to overcome the inertia of the moving parts that weigh 300 g.*

Solution:

$r_c = 25$ mm $\quad N = 1500$ rpm

$h = 12$ mm $\quad r_n = 3$ mm

$m = 0.3$ kg

Crank rotation during of the exhaust valve = 45° + 180° + 15° = 240°

In four-stroke engines, the camshaft speed is half that of the crankshaft.

Angle of action of the camshaft,

$$2\alpha = \frac{240}{2} = 120°$$

$$\therefore \quad \alpha = \frac{120}{2} = 60°$$

Refer to Fig. 7.37,

$r + r_n = r_c + h$

or $r = 25 + 12 - 3 = 34$ mm

$(PQ)^2 = (OP)^2 + (OQ)^2 - 2\,(OP)\,(OQ) \cos \angle POQ$

$(r_f - 3)^2 = (r_f - 25)^2 + (34)^2 - 2\,(r_f - 25)\,(34) \cos (180° - 60°)$

$r_f^2 + 9 - 6r_f = r_f^2 + 625 - 50r_f + 1156 + 34r_f - 850$

$r_f = 92.2$ mm

Applying sine rule to ΔOPQ,

$$\frac{OQ}{\sin \beta} = \frac{PQ}{\sin (180° - \alpha)}$$

$$\frac{r}{\sin \beta} = \frac{r_f - r_n}{\sin 120°}$$

$$\frac{34}{\sin \beta} = -\frac{92.2 - 3}{\sin 120°}$$

$\sin \beta = 0.33$

$\alpha = 19.27°$

Velocity is maximum when the contact is on the point where the circular flank meets the circular nose.

$$v_{max} = \omega (r_f - r_c) \sin \beta$$

$$= \frac{2\pi \times 1500}{60} (92.2 - 25) \sin 19.27°$$

$$= 157.08 \times 67.2 \times 0.33$$

$$= 3480 \text{ mm/s or } 3.48 \text{ m/s}$$

The same result is obtained if relation of Eq. (7.28) is used, i.e.,

$$v_{max} = \omega r \sin(\alpha - \theta)$$

Maximum acceleration is when $\theta = 0$,

$f_{max} = \omega^2 (r_f - r_c) = (157.08)^2 (92.2 - 25)$

$= 1658\ 090$ mm/s^2 or 1658.09 m/s^2

Maximum retardation is when $\alpha - \theta = 0$,

$f_{max} = \omega^2 r = (157.08)^2 \times 34 = 838\ 920$ mm/s^2 or 838.92 m/s^2

Spring force is needed to maintain contact during the retardation of the follower.

Minimum force, $F = m \times f$

$= 0.3 \times 838.92 = 251.7$ N

7.11 ANALYSIS OF A RIGID ECCENTRIC CAM

Analysis of a rigid eccentric cam involves the determination of the contact force, the spring force and the cam shaft torque for one revolution of the cam. In simplified analysis, all the components of the cam system are assumed to be rigid and the results are applicable to low-speed systems. However, if the speeds are high and the members are elastic, an elastic body analysis must be made. The elasticity of the members may be due to extreme length of the follower or due to use of elastic materials in the system. In such cases, noise, excessive wear, chatter, fatigue failure of some of the parts are the usual things.

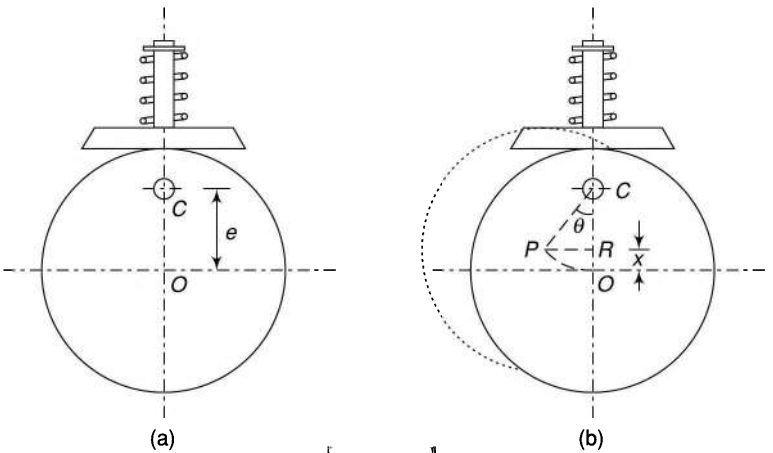

Fig. 7.40

A circular disc cam with the cam shaft hole drilled off centre is known as an *eccentric plate cam*. Figure 7.40(a) shows a simplified reciprocating eccentric cam system consisting of a plate cam, a flat face follower and a retaining spring.

Let e = eccentricity, the distance between the centre of the disc and of the shaft

m = mass of the follower

s = stiffness of the retaining spring

ω = angular velocity of the cam rotation

P = preload including the weight of the follower or the force on the cam at $x = 0$

x = motion of the follower (zero at the bottom of the stroke)

If the disc is rotated through an angle θ [Fig. 7.40(b)], the mass m is displaced by a distance x, so that

$$x = e - e\cos\theta \tag{7.33}$$

Velocity, $$\dot{x} = \frac{dx}{dt} = \frac{dx}{d\theta}\frac{d\theta}{dt} = e\omega\sin\theta \tag{7.34}$$

Acceleration, $$\ddot{x} = \frac{d\dot{x}}{dt} = \frac{d\dot{x}}{d\theta}\frac{d\theta}{dt} = e\omega^2\cos\theta \tag{7.35}$$

Now, as the follower is displaced in the upward direction, the acceleration $\ddot{x}$ of the follower is in the upward direction indicating the inertia force to be in the downward direction. The spring force is also exerted in the downward direction. The force exerted by the cam on the follower F, however, will be in the upward direction.

Thus, the various forces acting on the follower mass are

Inertia force	$= m\ddot{x}$	(downwards)
Spring force	$= sx$	(downwards)
Preload	$= P$	(downwards)
Force exerted by cam	$= F$	(upwards)

Thus the equilibrium equation becomes,

$$m\ddot{x} + sx + P - F = 0$$

$$\begin{aligned} F &= m\ddot{x} + sx + P \\ &= me\omega^2 \cos \omega t + se - se \cos \omega t + P \\ &= (se + P) + (m\omega^2 - s)\, e \cos \omega t \end{aligned} \tag{7.36}$$

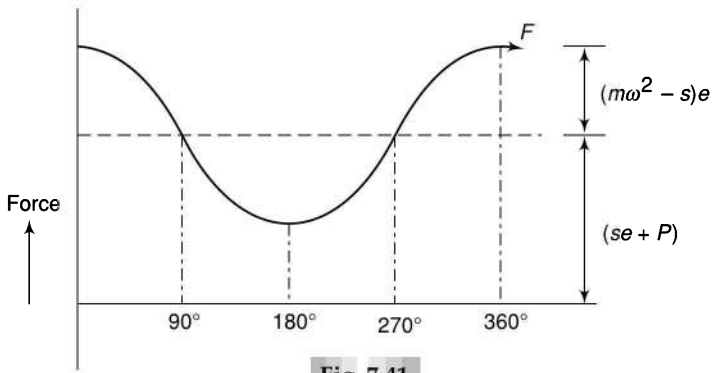

Fig. 7.41

Equation 7.36 shows that the force F exerted by a cam on the follower consists of a constant term $(se + P)$ with a cosine wave superimposed on it, the maximum value of which occurs at $\theta = 0°$ and minimum at $\theta = 180°$. Figure 7.41 shows the change of this force with the angular displacement of the cam. As the cam shaft velocity increases, the term involving square of the velocity increases at a faster rate and the force F becomes zero at a speed when

$$(se + P) + (m\omega^2 - s)\, e \cos \omega t = 0 \tag{7.37}$$

This can happen at $\theta = 180°$. At that speed, there will be some impact between the cam and the follower, resulting in a rattling, clicking and noisy operation. This is usually known as *jump*. However, this can be prevented to some extent by increasing the preload exerted by the spring or the spring stiffness.

At jump speed,

$$(se + P) - (m\omega^2 - s)\, e = 0$$

or

$$2se + P - me\omega^2 = 0$$

or

$$\omega = \sqrt{\frac{2se + P}{me}} \tag{7.38}$$

and jump will not occur if preload of the spring is increased such that $P > e(m\omega^2 - 2s)$

The torque applied by the shaft to the cam,

$$\begin{aligned} T &= F.\, e \sin \omega t \\ &= [(se + P) + (m\omega^2 - s)\, e \cos \omega t]\, e \sin \omega t \\ &= e(se + P) \sin \omega t + \frac{e^2}{2} (m\omega^2 - s) \sin 2\omega t \end{aligned} \tag{7.39}$$

Figure 7.42 shows the variation of torque with the cam rotation. It may be observed from the plots that area of the torque–displacement diagram above and below the X-axis is the same meaning that the energy required to raise the follower is recovered during the return. A flywheel may be used to handle this fluctuation of energy.

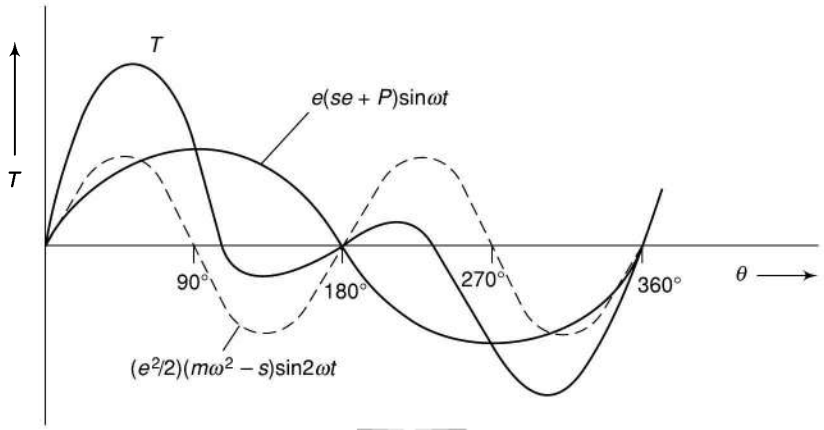

Fig. 7.42

Example 7.13 *A circular disc cam of 120 mm diameter with its centre displaced at 40 mm from the camshaft is used with a flat surface follower. The line of action of the follower is vertical and passes through the shaft axis. The mass of the follower is 3 kg and is pressed downwards with a spring of stiffness 5 N/mm. In the lowest position, the spring force is 60 N.*

Derive an expression for the acceleration of the follower as a function of cam rotation from the lowest position of the follower. Also, find the speed at which the follower begins to lift from the cam surface.

Solution:

$e = 40$ mm $\qquad m = 3$ kg

$s = 5$ N/mm $= 5\,000$ N/m

$P = 60$ N $+ mg = (60 + 3 \times 9.81)$ N

Consider the rotation of the cam through angle θ (Refer Fig. 7.43),

Now, $\quad x = 40 - 40\,e\cos\theta = 40\,(1 - \cos\theta)$

$$\dot{x} = \frac{dx}{dt} = \frac{dx}{d\theta}\frac{d\theta}{dt} = 40\omega\sin\theta$$

$$\ddot{x} = \frac{dv}{dt} = \frac{dv}{d\theta}\frac{d\theta}{dt} = 40\omega^2\cos\theta$$

which is the required expression for acceleration of the cam follower system.

To find the speed at which the follower begins to lift from the cam surface or the jump speed,

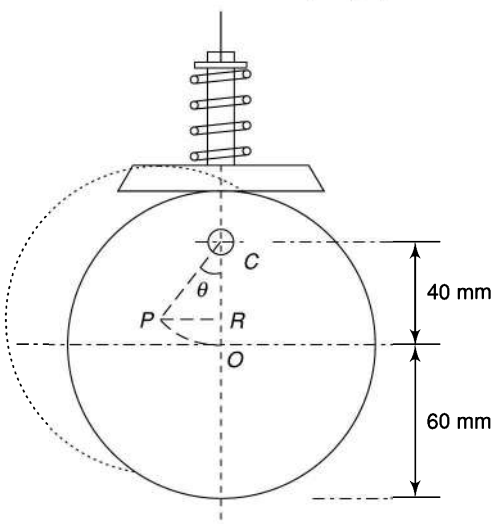

Fig. 7.43

$$\omega = \sqrt{\frac{2se + P}{me}} \qquad \text{(Eq. 7.38)}$$

$$= \sqrt{\frac{2 \times 5000 \times 0.04 + 60 + 3 \times 9.81}{3 \times 0.04}} \qquad = 63.86 \text{ rad/s}$$

$$= \sqrt{4078.6} \qquad \text{or} \quad \frac{2\pi N}{60} = 63.86$$

$$\text{or} \quad N = \underline{609.9 \text{ rpm}}$$

7.12 ANALYSIS OF AN ELASTIC CAM SYSTEM

To illustrate the effect of follower elasticity upon its displacement and velocity, consider a simplified model of a cam system with a linear motion used for low-speed cams (Fig. 7.44).

Let

m = lumped mass of the follower
s_1 = stiffness of the retaining spring
s_2 = stiffness of the follower
x = displacement of the lumped mass of the follower
y = motion machined into the cam surface
h = lift of the follower

Assume a cam profile that gives a uniform rise for an angle of rotation ϕ followed by a dwell. Thus,

$$y = h\frac{\theta}{\varphi} = h\frac{\omega t}{\varphi}$$

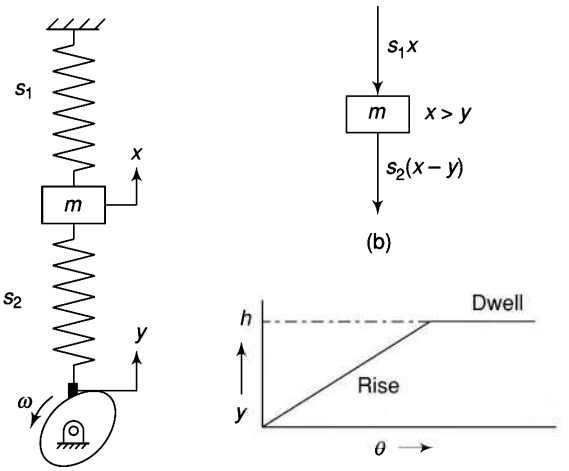

Fig. 7.44

As the follower is usually a rod, its stiffness s_2 is far greater than the stiffness s_1 of the spring. The spring is assembled in such a way that it exerts a preload force. The displacement x of the lumped mass is taken from the equilibrium position after the spring is assembled. In the equilibrium position, the spring and the follower exert equal and opposite preload forces on the mass.

Assuming the displacement x to be more than y, the various forces acting on the follower mass are

Inertia force = $m\ddot{x}$ (downwards)
Spring force = s_1x (downwards)
Force of elastic follower = $s_2(x-y)$ (downwards)

Thus

$$m\ddot{x} + s_1x_1 + s_2(x-y) = 0$$

$$\ddot{x} + \frac{s_1 + s_2}{m}x = \frac{s_2}{m}y$$

$$\ddot{x} + \omega_n^2 x = \frac{s_2}{m}y$$

During ascent, the displacement of the follower mass is given by the solution of the above equation, i.e.,

$$x = A\cos\omega_n t + B\sin\omega_n t + \frac{s_2}{m\omega_n^2}y \tag{i}$$

Differentiating with respect to t,

$$\dot{x} = -A\omega_n \sin\omega_n t + B\omega_n \cos\omega_n t + \frac{s_2}{m\omega_n^2}\dot{y} \tag{ii}$$

When $t = 0$, $x = \dot{x} = 0$ and $y = 0$

$\therefore$ from (i), $0 = A + 0 + 0$

or $A = 0$

From (ii),
$$0 = 0 + B\omega_n + \frac{s_2}{m\omega_n^2}\dot{y}$$
$$B = -\frac{s_2}{m\omega_n^2}\dot{y}$$

$\therefore$ (i) becomes,

$$x = 0 - \frac{s_2}{m\omega_n^2}\dot{y}\sin\omega_n t + \frac{s_2}{m\omega_n^2}y \tag{7.40}$$

The particular integral $\frac{s_2}{m\omega_n^2}y$ is called the *follower command.*

$$x = \frac{s_2}{m\omega_n^2}\left(y - \frac{\dot{y}}{\omega_n}\sin\omega_n t\right)$$
$$= \frac{s_2}{m\omega_n^2}\left(\frac{h}{\varphi}\theta - \frac{h\omega}{\varphi\omega_n}\sin\omega_n t\right) \quad \cdots\left(\dot{y} = \frac{h}{\varphi}\omega\right)$$

$\therefore$
$$x = \frac{s_2 h}{m\omega_n^2\varphi}\left(\omega t - \frac{\omega}{\omega_n}\sin\omega_n t\right)$$
$$= \frac{\omega \cdot s_2 h}{m\omega_n^2\varphi}\left(t - \frac{\sin\omega_n t}{\omega_n}\right)$$
$$= \frac{s_2 h}{rm\omega_n\varphi}\left(t - \frac{\sin\omega_n t}{\omega_n}\right)$$

where $r = \omega_n/\omega$

$$\dot{x} = \frac{s_2 h}{rm\omega_n\varphi}\left(1 - \frac{\omega_n}{\omega_n}\cos\omega_n t\right)$$
$$= \frac{s_2 h}{rm\omega_n\varphi}(1 - \cos r\theta)$$

At the peak,

$$x = x_1, \quad \theta = \varphi$$
$$x_1 = \frac{s_2 h}{rm\omega_n^2\varphi}(r\varphi - \sin r\varphi)$$
$$\dot{x}_1 = \frac{s_2 h}{rm\omega_n\varphi}(1 - \cos\varphi)$$

These become the initial conditions for dwell period.

For dwell period,

$$x = A\cos\omega_n t + B\sin\omega_n t + \frac{s_2}{m\omega_n^2}h$$

$$\dot{x} = -A\omega_n \sin \omega_n t + B\omega_n \cos \omega_n t \qquad \left(\frac{s_2}{m\omega_n^2} h \text{ is constant} \right)$$

At $t = 0$, $x = x_1$, $y = h$, $\dot{x} = \dot{x}_1$

$$x_1 = A + \frac{s_2 h}{m\omega_n^2}, \qquad \therefore \qquad A = x_1 - \frac{s_2 h}{m\omega_n^2},$$

$$\dot{x}_1 = B\omega_n, \qquad \therefore \qquad B = \frac{\dot{x}_1}{\omega_n}$$

Therefore, during the dwell period,

$$x = \left(x_1 - \frac{s_2 h}{m\omega_n^2} \right) \cos \omega_n t + \frac{\dot{x}_1}{\omega_n} \sin \omega_n t + \frac{s_2}{m\omega_n^2} h \tag{7.41}$$

Figure 2.45 shows the response of the follower x, the cam motion y, and the follower command. The follower command is different from the cam motion due to the elasticity of the follower.

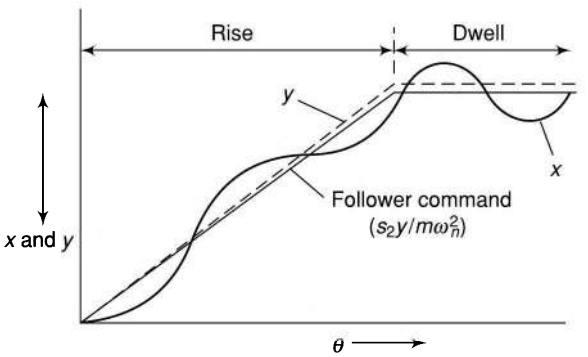

Fig. 7.45

7.13 SPRING SURGE, UNBALANCE AND WIND UP

Usually, the helical springs have a tendency to vibrate of their own when subjected to rapidly varying forces. This vibration of the retaining spring of a cam is called *spring surge*. Valve springs of the automobiles that operate near the critical frequency may keep the valve open for short periods when they are supposed to be closed. This results in lowering the efficiency of the engine apart from early fatigue failure of the springs.

If the mass of the cam is not uniformly distributed about the axis of the rotation, *unbalance* is produced on the shaft. This, along with the reaction of the follower against the cam, produce vibratory forces in a cam. Therefore, a face or end cam has better balance characteristics as compared to a disc cam.

It is observed from the plot of cam shaft torque (Fig.7.42) that it varies over a complete rotation of the cam. This tends to twist or *wind up* the shaft. During the rise of the follower, the angular cam velocity is decreased which also results in the slower follower velocity. As the follower reaches near the end of rise, the energy stored as a result of wind up is released resulting in velocity and acceleration of the follower to rise above average values. This may produce follower *jump* or impact. This phenomenon is more pronounced during the movement of heavy loads by the follower, when the follower moves at high speed or when the shaft is flexible.

Summary

1. A cam is a mechanical member used to impart desired motion to a follower by direct contact.
2. Complicated output motions which are otherwise difficult to achieve can easily be produced with the help of cams.
3. Cams are classified according to shape, follower movement, and the manner of constraint of the follower.
4. The motions of the followers are distinguished from each other by the dwells they have. A dwell is the zero displacement or the absence of motion of the follower during the motion of the cam.
5. Cam followers are classified according to shape, movement, and the location of line of movement.
6. *Base circle* is the smallest circle tangent to the cam profile (contour) drawn from the centre of rotation of a radial cam.
7. Pitch curve is the curve drawn by the trace point assuming the cam to be fixed and rotating the trace point of the follower around the cam.
8. The pressure angle, representing the steepness of the cam profile, is the angle between the normal to the pitch curve at a point and the direction of the follower motion. It varies in magnitude at all instants of the follower motion.
9. In simple harmonic motion, the maximum velocity of the follower is $v_{\max} = \frac{h}{2}\frac{\pi\omega}{\varphi}$ at $\theta = \frac{\varphi}{2}$ and maximum acceleration
$$f_{\max} = \frac{h}{2}\left(\frac{\pi\omega}{\varphi}\right)^2 \text{ at } \theta = 0^\circ \cdot$$
10. In constant acceleration and deceleration, acceleration is given by, $f = \frac{4h\omega^2}{\varphi^2}$ and maximum velocity $v_{\max} = \frac{2h\omega}{\varphi}$ at $\theta = \varphi/2$.
11. In constant velocity of the follower, the constant velocity is given by $v = \frac{h\omega}{\varphi}$.
12. In cycloidal motion, $v_{\max} = \frac{2h\omega}{\varphi}$ at $\theta = \frac{\varphi}{2}$ and $f_{\max} = \frac{2h\pi\omega^2}{\varphi^2}$ at $\theta = \frac{\varphi}{4}$
13. Cycloidal motion is the most ideal programme for high-speed follower motion.
14. A tangent cam is symmetrical about the centre line. It has straight flanks with circular nose.
15. A circular arc cam is made up of three arcs of different radii. In such cams, the acceleration may change abruptly at the blending points due to instantaneous change in the radius of curvature.

Exercises

1. What is a cam? What type of motion can be transmitted with a cam and follower combination? What are its elements?
2. How are the cams classified? Describe in detail.
3. Discuss various types of cams.
4. Compare the performance of knife-edge, roller and mushroom followers.
5. Define base circle, pitch circle, trace point, pitch curve and pressure angle.
6. What are the requirements of a high-speed cam?
7. Which follower programme do you recommend for a high-speed cam and why?
8. What is a displacement diagram? Why is it necessary to draw it before drawing a cam profile?
9. Deduce expressions for the velocity and acceleration of the follower when it moves with simple harmonic motion.
10. Why is a cycloidal motion programme most suitable for high-speed cams?
11. Explain the procedure to lay out the cam profile for a reciprocating follower.
12. What is a tangent cam? Find the expressions for the velocity and acceleration of a roller follower for such a cam.
13. Derive relations for velocity and acceleration for a convex cam with a flat-faced follower.
14. Draw the profile of a cam that gives a lift of 40 mm to a rod carrying a 20 mm diameter roller. The axis of the roller passes through the centre of the cam. The least radius of the cam is 50 mm. The rod is to be lifted with simple harmonic motion in a quarter revolution and is to be dropped suddenly at half

revolution. Determine the maximum velocity and maximum acceleration during the lifting. The cam rotates at 60 rpm.

(0.25 m/s; 3.155 m/s²)

15. Lay out the profile of a cam so that the follower
    - is moved outwards through 30 mm during 180° of cam rotation with cycloidal motion
    - dwells for 20° of the cam rotation
    - returns with uniform velocity during the remaining 160° of the cam rotation

    The base circle diameter of the cam is 28 mm and the roller diameter 8 mm. The axis of the follower is offset by 6 mm to the left. What will be the maximum velocity and acceleration of the follower during the outstroke if the cam rotates at 1500 rpm counter-clockwise?

    (3 m/s; 471.2 m/s²)

16. Use the following data in drawing the profile of a cam in which a knife-edged follower is raised with uniform acceleration and deceleration and is lowered with simple harmonic motion:

    Least radius of cam = 60 mm
    Lift of follower = 45 mm
    Angle of ascent = 60°
    Angle of dwell between ascent and descent = 40°
    Angle of descent = 75°

    If the cam rotates at 180 rpm, determine the maximum velocity and acceleration during ascent and descent.

    (*Ascent:* 1.62 m/s; 58.3 m/s²)
    Descent: 1.02 m/s; 46.05 m/s²)

17. Draw the profile of a cam which is to give oscillatory motion to the follower with uniform angular velocity about its pivot. The base circle diameter is 50 mm, angle of oscillation of the follower is 30° and the distance between the cam centre and the pivot of the follower is 60 mm. The oscillating lever is 60 mm long with a roller of 8-mm diameter at the end. One oscillation of the follower is completed in one revolution of the cam.

18. Set out the profile of a cam to give the following motion to a flat mushroom contact face follower:
    - Follower to rise through 24 mm during 150° of cam rotation with SHM
    - Follower to dwell for 30° of the cam rotation
    - Follower to return to the initial position during 90° of the cam rotation with SHM
    - Follower to dwell for the remaining 90° of cam rotation

    Take minimum radius of the cam as 30 mm.

19. A cam is required to give motion to a follower fitted with a roller that is 50 mm in diameter. The lift of the follower is 30 mm and is performed
    - with uniform acceleration for 12 mm, the cam turns through 45°
    - with uniform velocity for 12 mm, the cam turns through the next 30°
    - with uniform deceleration for the remainder of the lift, the cam turns through the next 45°

    The follower falls through immediately with simple harmonic motion while the cam turns through 120°. Then a period of dwell is followed for 120° of the cam angle. Construct a lift and fall diagram on a cam angle base. Also, draw the outline of the cam. The least radius of the cam is 35 mm. The line of motion of the follower passes through the centre of the cam axis.

20. Draw the profile of a cam operating a roller reciprocating follower having a lift of 35 mm. The line of stroke of the follower passes through the axis of the cam shaft. The radius of the roller is 10 mm and the minimum radius of the cam is 40 mm. The cam rotates at 630 rpm counter-clockwise. The follower is raised with simple harmonic motion for 90° of the cam rotation, dwells for next 60° and then lowers with uniform acceleration and deceleration for the next 150°. The follower dwells for the rest of the cam rotation.

    Also, draw the displacement, velocity and the acceleration diagrams for the motion of the follower for one complete revolution of the cam indicating main values.

    (2.31 m/s, 304.9 m/s², 5.54 m/s, 878.2 m/s²)

21. A tangent cam with straight working faces is tangential to a base circle of 80 mm diameter. It operates a roller follower of 32 mm diameter. The line of stroke of the follower passes through the axis of the cam. The nose circle radius of the cam is 10 mm and the angle between the tangential faces of the cam is 90°. If the speed of the cam is 315 rpm, determine the acceleration of the follower when (i) during the lift, the roller just leaves the straight flank, and (ii) the roller is at the outer end of its lift, i.e., at the top of the nose.

    (105.1 m/s², 799.1 m/s²)

22. The following particulars relate to a symmetrical tangent cam having a roller follower:

    Minimum radius of the cam = 40 mm
    Lift = 20 mm
    Speed = 360 rpm

Roller diameter = 44 mm
Angle of ascent = 60°

Calculate the acceleration of a follower at the beginning of the lift. Also, find its values when the roller just touches the nose and is at the apex of the circular nose. Sketch the variation of displacement, velocity and acceleration during ascent.

(88.12 m/s²; 164 m/s²; and –92.6 m/s²; –111 m/s²)

23. A flat-ended valve tappet is operated by a symmetrical cam with circular arcs for flank and nose profiles. The total angle of action is 150°, base circle diameter is 125 mm and the lift is 25 mm. During the lift, the period of acceleration is half that of the declaration. The speed of cam shift is 1250 rpm. The straight-line path of the tappet passes through the cam axis. Find
    (i) radii of the nose and the flank, and
    (ii) maximum acceleration and declaration during the lift.

    (40.3 mm, 148 mm; 1465 m/s²; 808.8 m/s²)

24. In a four-stroke petrol engine, the crank angle is 5° after t.d.c. when the suction valve opens and 53° after b.d.c. when the suction valve closes. The lift is 8 mm, the nose radius is 3 mm and the least radius of the cam is 18 mm. The shaft rotates at 800 rpm. The cam is of the circular type with a circular nose and flanks while the follower is flat-faced. Determine the maximum velocity and the maximum acceleration and retardation of the valve. When is the minimum force exerted by the springs to overcome the inertia of moving parts weighting 250 g.

    (1.3 m/s; 433.7 m/s; 161.4 m/s²; 40.35 N)

25. A symmetrical circular cam operates a flat-faced follower with a lift of 30 mm. The minimum radius of the cam is 50 mm and the nose radius is 12 mm. The angle of lift is 80°. If the speed of the cam is 210 rpm, find the main dimensions of the cam and the acceleration of the follower at (i) the beginning of the lift (ii) the end of contact with the circular flank (iii) the beginning of contact with the nose, and (iv) the apex of nose.

    (r = 68 mm, 29.38 m/s², 23.8 m/s², 26.2 m/s², 32.9 m/s²)

26. A circular disc cam with diameter of 80 mm with its centre displaced at30 mm from the camshaft is used with a flat surface follower. The line of action of the follower is vertical and passes through the shaft axis. The mass of the follower is 2.5 kg and is pressed downwards with a spring of stiffness 4 N/mm. In the lowest position, the spring force is 50 N. Derive an expression for the acceleration of the follower as a function of cam rotation from the lowest position of the follower. Also, find the speed at which the follower begins to lift from the cam surface.

    (618.4 rpm)

8 FRICTION

Introduction

When a body slides over another, the motion is resisted by a force called the *force of friction*. The force arises from the fact that the surfaces, though planed and made smooth, have ridges and depressions that interlock and the relative movement is resisted. Thus, the force of friction on a body is parallel to the sliding surfaces and acts in a direction opposite to that of the sliding body.

There are phenomena, where it is necessary to reduce the force of friction whereas in some cases it must be increased. In case of lathe slides, journal bearings, etc., where the power transmitted is reduced due to friction, it has to be decreased by the use of lubricated surfaces. In processes where the power is transmitted through friction, attempts are made to increase it to transmit more power. Examples are friction clutches and belt drives. Even the tightness of a nut and bolt is dependent mainly on the force of friction. Had there been no friction between the nut and the surface on which it is tightened, the nut would loosen off at the moment the spanner is removed after tightening.

8.1 KINDS OF FRICTION

Usually, three kinds of friction, depending upon the conditions of surfaces are considered.

1. Dry Friction

Dry friction is said to occur when there is relative motion between two completely unlubricated surfaces. It is further divided into two types:

(a) ***Solid Friction*** When the two surfaces have a sliding motion relative to each other, it is called a solid friction.

(b) ***Rolling Friction*** Friction due to rolling of one surface over another (e.g., ball and roller bearings) is called rolling friction (Sec 8.10).

2. Skin or Greasy Friction

When the two surfaces in contact have a minute thin layer of lubricant between them, it is known as *skin* or *greasy friction*. Higher spots on the surface break through the lubricant and come in contact with the other surface.

Skin friction is also termed as *boundary* friction (Sec 8.12).

3. Film Friction

When the two surfaces in contact are completely separated by a lubricant, friction will occur due to the shearing of different layers of the lubricant. This is known as *film friction* or *viscous* friction (Sec. 8.15).

8.2 LAWS OF FRICTION

Experiments have shown that the force of solid friction

- is directly proportional to normal reaction between the two surfaces
- opposes the motion between the surfaces
- depends upon the materials of the two surfaces
- is independent of the area of contact
- is independent of the velocity of sliding

The last of these laws is not true in the strict sense as it has been found that the friction force decreases slightly with the increase in velocity.

8.3 COEFFICIENT OF FRICTION

Let a body of weight **W** rest on a smooth and dry plane surface. Under the circumstances, the plane surface also exerts a reaction force $\mathbf{R}_n$ on the body which is normal to the plane surface. If the plane surface considered is horizontal, $\mathbf{R}_n$ would be equal and opposite to **W** [Fig. 8.1(a)].

Let a small horizontal force F be applied to the body to move it on the surface [Fig. 8.1(b)]. So long the body is unable to move, the equilibrium of the body provides

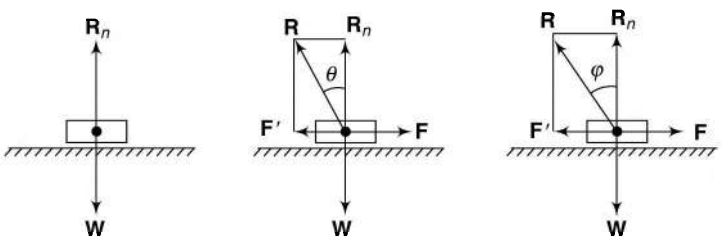

Fig. 8.1

$$R_n = W \quad \text{and} \quad F = F'$$

where **F′** is the horizontal force resisting the motion of the body. As the force **F** is increased, the relative force **F′** also increases accordingly. **F′** and $\mathbf{R}_n$, the friction and the normal reaction forces can also be combined into a single reaction force **R** inclined at an angle θ to the normal. Thus

$$R\cos\theta = W \quad \text{and} \quad R\sin\theta = F$$

At a moment, when the force **F** would just move the body, the value of **F′** or **R** $\sin\theta$ (equal to **F**) is called the *static force of friction*. Angle θ attains the value φ and the body is in equilibrium under the action of three forces [Fig. 8.1(c)]:

F, in the horizontal direction

W, in the vertical downward direction, and

R, at an angle φ with the normal (inclined towards the force of friction).

$$F' \propto R_n$$
$$= \mu R_n$$

where μ is known as the *coefficient of friction.*

or

$$\mu = \frac{F'}{R_n}$$

Also, in Fig. 8.1(c),
$$\tan\varphi = \frac{F'}{R_n}$$
or
$$\tan\varphi = \frac{\mu R_n}{R_n} = \mu \tag{8.1}$$

The angle φ is known as the *limiting angle of friction* or simply the *angle of friction*.

Now, if the body moves over the plane surface, it is observed that the friction force will be slightly less than the static friction force. As long as the body moves with a uniform velocity, the force F required for the motion of the body will be equal to the force of friction on the body. However, if the velocity is to increase, additional force will be needed to accelerate the body. Thus, while the body is in motion, it can be written that

$$\tan\varphi = \mu$$

where φ is approximately the limiting angle of friction.

Also, no movement is possible until the angle of reaction **R** with the normal becomes equal to the limiting angle of friction or until $\varphi = \mu$.

Example 8.1 *The force required just to move a body on a rough horizontal surface by pulling is 320 N inclined at 30° and by pushing 380 N at the same angle. Find the weight of the body and the coefficient of friction.*

Solution

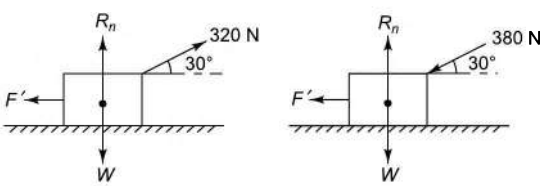

Fig. 8.2

(a) Consider the pull [Fig. 8.2(a)].
Resolving the forces horizontally,
$F' = 320 \cos 30°$
or $\mu R_n = 277$ or $R_n = 277/\mu$
Resolving the forces vertically,
$R_n + 320 \sin 30° = W$
$$\text{or } \frac{277}{\mu} + 160 = W \text{ or } \mu = \frac{277}{W - 160} \tag{i}$$

Similarly, consider the push [Fig. 8.2(b)],
Resolving the forces horizontally,
$F' = 380 \cos 30°$ or $\mu R_n = 329$ or $R_n = 329/\mu$
Resolving the forces vertically,
$R_n = W + 380 \sin 30°$
$$\text{or } \frac{329}{\mu} = W + 190 \text{ or } \mu = \frac{329}{W + 190} \tag{ii}$$
Equating (i) and (ii),
$$\frac{277}{W - 160} = \frac{329}{W + 190}$$
or $277\,(W+190) = 329\,(W - 160)$
or $52\,W = 105\,270$ or $W = 2024.4$ N
or $\mu = 0.1486$

8.4 INCLINED PLANE

1. Body at Rest

When a body is at rest on an inclined plane making an angle α with the horizontal, the forces acting on the body are (Fig. 8.3)

- **W**, weight of body in downward direction
- $\mathbf{R}_n$, normal reaction
- **F′**, force resisting the motion of body

From equilibrium conditions,

$$W \sin \alpha = F' \text{ and } W \cos \alpha = R_n$$

If the angle of inclination of the plane is increased, the body will just slide down the plane of its own when

$$W \sin \alpha = F' = \mu R_n = \mu W \cos \alpha$$

or $\tan \alpha = \mu = \tan \varphi$

or $\alpha = \varphi$ (8.2)

This maximum value of the angle of inclination of the plane with the horizontal when the body starts sliding on its own is known as the *angle of repose* or *limiting angle of friction.*

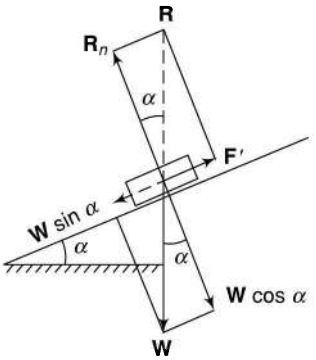

Fig. 8.3

2. Motion Up the Plane

Consider a body moving up an inclined plane under the action of a force **F** as shown in Fig. 8.4(a).

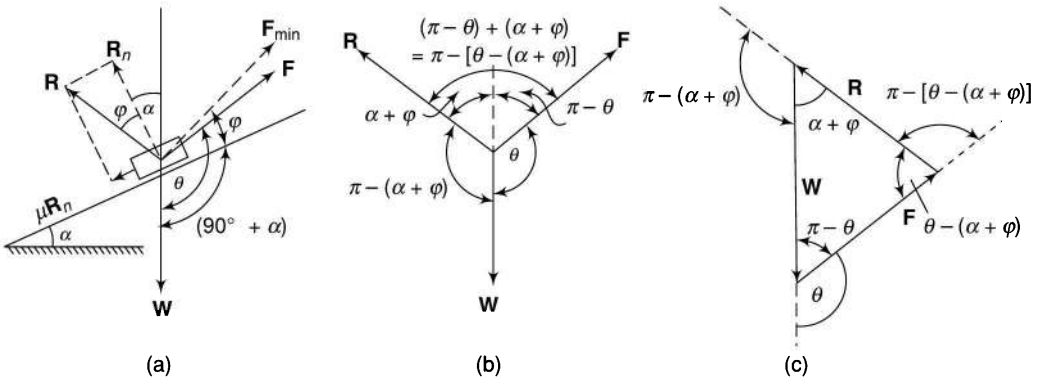

Fig. 8.4

Let α = angle of inclined plane with the horizontal

θ = angle of force **F** with the direction of **W**.

As the motion is up the plane, the friction force **F′** ($= \mu \mathbf{R}_n$) would act downwards along the plane. Combining **F′** and $\mathbf{R}_n$ as before, the body is in equilibrium under the action of forces **F, W** and **R** [Fig. 8.4(b)].

Applying Lami's theorem, we get

$$\frac{F}{\sin[\pi - (\alpha + \varphi)]} = \frac{W}{\sin[\pi - \{\theta - (\alpha + \varphi)\}]}$$

$$\frac{F}{\sin(\alpha + \varphi)} = \frac{W}{\sin[\theta - (\alpha + \varphi)]}$$

Alternatively, a triangle of forces can be drawn as shown in Fig. 8.4(c), and applying sine law of forces,

$$\frac{F}{\sin(\alpha+\varphi)} = \frac{W}{\sin[\theta-(\alpha+\varphi)]}$$

Thus,

$$F = \frac{W\sin(\alpha+\varphi)}{\sin[\theta-(\alpha+\varphi)]} \tag{8.3}$$

(i) if the force applied is horizontal, $\theta = 90^\circ$

$$F = \frac{W\sin(\alpha+\varphi)}{\sin[90^\circ-(\alpha+\varphi)]} = \frac{W\sin(\alpha+\varphi)}{\cos(\alpha+\varphi)} = W\tan(\alpha+\varphi)$$

(ii) if the force applied is parallel to the plane, $\theta = 90^\circ + \alpha$

$$\begin{aligned} F &= \frac{W\sin(\alpha+\varphi)}{\sin\left[90^\circ+\alpha-(\alpha+\varphi)\right]} \\ &= \frac{W\sin(\alpha+\varphi)}{\cos\varphi} \\ &= \frac{W(\sin\alpha\cos\varphi+\cos\alpha\sin\varphi)}{\cos\varphi} \\ &= W(\sin\alpha+\mu\cos\alpha) \end{aligned}$$

(iii) F will be minimum if the denominator on the right-hand side is maximum,

i.e., $\sin[\theta-(\alpha+\varphi)] = 1$

or $\theta-\alpha+\varphi = 90^\circ$

or $\theta-(90^\circ+\alpha) = \varphi$

i.e., the angle between F and the inclined plane should be equal to the angle of friction. In that case,

$$F_{\min} = W\sin(\alpha+\varphi)$$

Efficiency The efficiency of an inclined plane, when a body slides up the plane, is defined as the ratio of the forces required to move the body without consideration and with consideration of force of friction.

Let F_o = force required to move the body up the plane without friction.

In the absence of friction, the force **R** coincides $\mathbf{R}_n$ and φ is zero,

and

$$F_o = \frac{W\sin\alpha}{\sin(\theta-\alpha)} \qquad \text{[Inserting } \phi = 0 \text{ in Eq. (8.3)]} \tag{8.4}$$

$$\begin{aligned} \eta = \frac{F_o}{F} &= \frac{W\sin\alpha}{\sin(\theta-\alpha)}\,\frac{\sin[\theta-(\alpha+\varphi)]}{W\sin(\alpha+\varphi)} \\ &= \frac{\sin\alpha}{\sin(\alpha+\varphi)}\,\frac{\sin[\theta-(\alpha+\varphi)]}{\sin(\theta-\alpha)} \\ &= \frac{\sin\alpha}{\sin(\alpha+\varphi)}\,\frac{\sin\theta\cos(\alpha+\varphi)-\cos\theta\sin(\alpha+\varphi)}{\sin\theta\cos\alpha-\cos\theta\sin\alpha} \end{aligned}$$

$$= \frac{\sin\alpha}{\sin(\alpha+\theta)} \frac{\sin\theta\sin(\alpha+\theta)\left[\dfrac{\cos(\alpha+\varphi)}{\sin(\alpha+\varphi)} - \dfrac{\cos\theta}{\sin\theta}\right]}{\sin\theta\sin\alpha\left[\dfrac{\cos\alpha}{\sin\alpha} - \dfrac{\cos\theta}{\sin\theta}\right]}$$

$$= \frac{\cot(\alpha+\varphi) - \cot\theta}{\cot\alpha - \cot\theta} \tag{8.5}$$

If $\theta = 90°$, i.e., if the direction of the applied force is horizontal,

$$\eta = \frac{\cot(\alpha+\varphi) - \cot 90°}{\cot\alpha - \cot 90°}$$

$$= \frac{\cot(\alpha+\varphi)}{\cot\alpha}$$

$$= \frac{\tan\alpha}{\tan(\alpha+\varphi)} \tag{8.6}$$

3. Motion Down the Plane

When the body moves down the plane, the force of friction $\mathbf{F}'$ $(=\mu\mathbf{R}_n)$ acts in the upwards direction and the reaction $\mathbf{R}$, i.e., the combination of $\mathbf{R}_n$ and $\mathbf{F}'$ is inclined backwards as shown in Fig. 8.5(a). Assume that $\mathbf{F}$ acts downwards.

Applying Lami's theorem as before [Fig. 8.5(b)],

$$\frac{F}{\sin[\pi-(\varphi-\alpha)]} = \frac{W}{\sin[\theta+(\varphi-\alpha)]}$$

$$F = \frac{W\sin(\varphi-\alpha)}{\sin[\theta+(\varphi-\alpha)]} \tag{8.7}$$

The equation suggests that F is positive only for $\varphi > \alpha$ and when $\varphi = \alpha$, the force required to slide the body down is zero, i.e., the body is on the point of moving down under its own weight W.

When $\varphi < \alpha$, i.e., the angle of friction is lesser than the angle of the inclined plane, F will be negative meaning that a force equal to F is to be applied in the opposite direction to resist the motion.

However, for a given value of α, F is minimum when the denominator of Eq. (8.7) is maximum

$$F_{\min} = W\sin(\varphi-\alpha) \tag{8.8}$$

If friction is neglected, i.e., $\varphi = 0$.

$$F_o = \frac{W\sin(-\alpha)}{\sin(\theta-\alpha)} = \frac{-W\sin\alpha}{\sin(\theta-\alpha)} \tag{8.9}$$

The force is negative indicating that in the absence of force of friction,

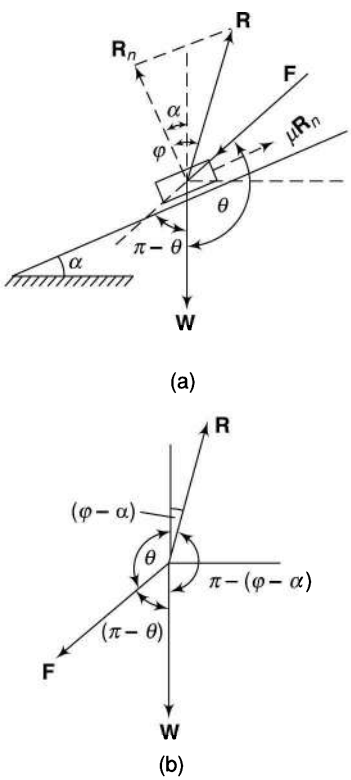

Fig. 8.5

a force in the opposite direction is required to oppose the motion down the plane. This is due to the fact that a component of **W** acts as an effort to move the body in the downward direction.

Efficiency Efficiency of the inclined plane when the body slides down the plane is defined as the ratio of the forces required to move the body with and without the consideration of force of friction, i.e.,

$$\eta = \frac{F}{F_o} = \frac{W\sin(\varphi-\alpha)}{\sin[\theta+(\varphi-\alpha)]}\frac{\sin(\theta-\alpha)}{W\sin\alpha}$$

$$= \frac{\sin(\varphi-\alpha)}{\sin\theta\cos(\varphi-\alpha)+\cos\theta\sin(\varphi-\alpha)}\frac{\sin\theta\cos\alpha-\cos\theta\sin\alpha}{\sin\alpha}$$

$$= \frac{\sin(\varphi-\alpha)}{\sin\theta\sin(\varphi-\alpha)\left[\dfrac{\cos(\varphi-\alpha)}{\sin(\varphi-\alpha)}+\dfrac{\cos\theta}{\sin\theta}\right]}\frac{\sin\theta\sin\alpha\left[\dfrac{\cos\alpha}{\sin\alpha}-\dfrac{\cos\theta}{\sin\theta}\right]}{\sin\alpha}$$

$$= \frac{\cot\alpha-\cot\theta}{\cot(\varphi-\alpha)+\cot\theta} \tag{8.10}$$

When θ is 90° or the force applied is horizontal,

$$\eta = \frac{\cot\alpha}{\cot(\varphi-\alpha)} = \frac{\tan(\varphi-\alpha)}{\tan\alpha} \tag{8.11}$$

Example 8.2 *A body is to be moved up an inclined plane by applying a force parallel to the plane surface. It is found that a force of 3 kN is required to just move it up the plane when the angle of inclination is 10° whereas the force needed increases to 4 kN when the angle of inclination is increased to 15°. Determine the weight of the body and the coefficient of friction.*

Solution:

When the force applied is parallel to the plane surface,

$$F = W(\sin\alpha + \mu\cos\alpha)$$

$$\therefore \quad 3000 = W(\sin 10^\circ + \mu\cos 10^\circ) \tag{i}$$

and $4000 = W(\sin 15^\circ + \mu\cos 15^\circ)$

dividing (ii) by (i),

$$\frac{4000}{3000} = \frac{W(\sin 15^\circ + \mu\cos 15^\circ)}{W(\sin 10^\circ + \mu\cos 10^\circ)}$$

or $(\sin 10^\circ + \mu\cos 10^\circ) = 0.75\,(\sin 15^\circ + \mu\cos 15^\circ)$

or $\mu(\cos 10^\circ - 0.75\cos 15^\circ) = 0.75\sin 15^\circ - \sin 10^\circ$

or $0.2604\,\mu = 0.0205$

$\mu = \underline{0.0786}$

From (i) $3000 = W(\sin 10^\circ + 0.0786\cos 10^\circ)$

$W = 11\,950$ N or $\underline{11.95\text{ kN}}$

8.5 SCREW THREADS

A screw thread is obtained when the hypotenuse of a right-angled triangle is wrapped round the circumference of a cylinder.

Figure 8.6(a) shows a triangle *abc* which is the development of a helix of diameter d and lead l (or pitch p for a single start thread).

Length of base = circumference of the cylinder of screw threads

$$= \pi d$$

Height of triangle = l

$$\tan \alpha = \frac{l}{\pi d}$$

where α is the helix angle.

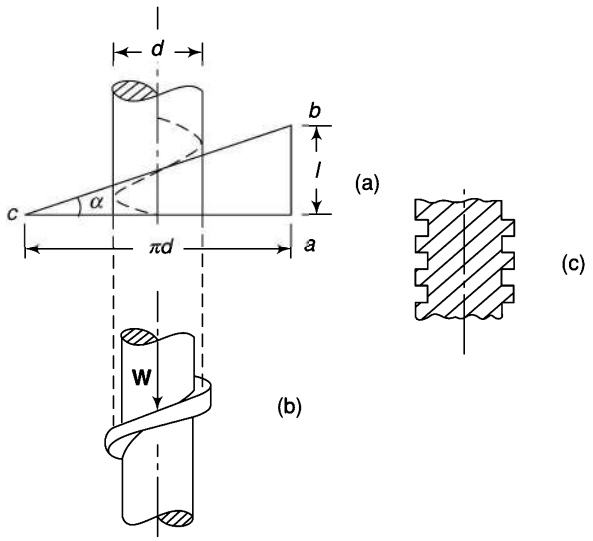

Fig. 8.6

Square Threads

A square-threaded screw used as a jack to raise a load W is shown in Fig 8.6(b). Faces of the square threads in the sectional view [Fig. 8.6(c)] are normal to the axis of the spindle. Force F acting horizontally is the force at the screw thread required to slide the load W up the inclined plane.

From Eq. (8.3) ($\theta = 90°$)

$$F = \frac{W \sin(\alpha + \varphi)}{\sin[90° - (\alpha + \varphi)]}$$

$$= \frac{W \sin(\alpha + \varphi)}{\cos(\alpha + \varphi)}$$

$$= W \tan(\alpha + \varphi) \tag{8.12}$$

$$= W \frac{\tan \alpha + \tan \varphi}{1 - \tan \alpha \tan \varphi}$$

$$= W \frac{\dfrac{l}{\pi d} + \mu}{1 - \dfrac{l}{\pi d}\mu}$$

$$= W \frac{1 + \mu \pi d}{\pi d - \mu l} \tag{8.13}$$

A bar is usually fixed to the screw head to use as a lever for the application of force.

Let f = force applied at the end of the bar of length L

Then

$$fL = F\frac{d}{2} = Fr$$

or

$$f = \frac{Fr}{L} = \frac{Wr}{L}\tan(\alpha + \varphi) \tag{8.14}$$

If the weight is to be lowered,

$$F = \frac{W \sin(\varphi - \alpha)}{\sin(90° + (\varphi - \alpha))} \qquad \text{[from Eq. (8.7), } \theta = 90°\text{]}$$

$$= \frac{W \sin(\varphi - \alpha)}{\cos(\varphi - \alpha)}$$

$$= W \tan(\varphi - \alpha) \tag{8.15}$$

$$f = \frac{Wr}{L} \tan(\varphi - \alpha) \tag{8.15a}$$

$$\text{Screw efficiency} = \frac{\text{work done in lifting the load/rev.}}{\text{work done by the applied force/rev.}}$$

$$= \frac{W \times l}{F \times \pi d}$$

$$= \frac{W}{F} \times \frac{l}{\pi d}$$

$$= \frac{W}{W \tan(\alpha + \varphi)} \tan \alpha$$

$$= \frac{\tan \alpha}{\tan(\alpha + \varphi)} \tag{8.16}$$

This is maximum when $\frac{d\eta}{d\alpha} = 0$

$$\frac{d}{d\alpha}\left[\frac{\tan \alpha}{\tan(\alpha + \varphi)}\right] = 0$$

or

$$\frac{\sec^2 \alpha \tan(\alpha + \varphi) - \sec^2(\alpha + \varphi) \tan \alpha}{\tan^2(\alpha + \varphi)} = 0$$

or

$$\sec^2 \alpha \tan(\alpha + \varphi) - \sec^2(\alpha + \varphi) \tan \alpha = 0$$

or

$$\frac{\tan(\alpha + \varphi)}{\sec^2(\alpha + \varphi)} = \frac{\tan \alpha}{\sec^2 \alpha}$$

or

$$\frac{\sin(\alpha + \varphi)}{\cos(\alpha + \varphi)} \cos^2(\alpha + \varphi) = \frac{\sin \alpha}{\cos \alpha} \cos^2 \alpha$$

or

$$\sin(\alpha + \varphi) \cos(\alpha + \varphi) = \sin \alpha \cos \alpha$$

or

$$2 \sin(\alpha + \varphi) \cos(\alpha + \varphi) = 2 \sin \alpha \cos \alpha$$

or

$$\sin 2(\alpha + \varphi) = \sin 2\alpha$$

This is possible if either $(\alpha + \varphi) = \alpha$, i.e., $\varphi = 0$ (or no friction)

or $\quad \sin 2(\alpha + \varphi) = \sin(\pi - 2\alpha)$

i.e. $\quad 2(\alpha + \varphi) = \pi - 2\alpha$

$$4\alpha + 2\varphi = \pi$$

$$\alpha = \frac{\pi - 2\varphi}{4} = 45° - \frac{\varphi}{2}$$

Thus, the necessary condition for the maximum efficiency is

$$\alpha = 45° - \frac{\varphi}{2} \tag{8.17}$$

$$\text{Also, } \eta_{\max} = \frac{\tan\left(45° - \frac{\varphi}{2}\right)}{\tan\left(45° - \frac{\varphi}{2} + \varphi\right)}$$

$$= \tan\left(45° - \frac{\varphi}{2}\right)\frac{1}{\tan\left(45° + \frac{\varphi}{2}\right)}$$

$$= \left(\frac{\tan 45° - \tan\frac{\varphi}{2}}{1 + \tan 45° \tan\frac{\varphi}{2}}\right)\left(\frac{1 - \tan 45° \tan\frac{\varphi}{2}}{\tan 45° + \tan\frac{\varphi}{2}}\right)$$

$$= \frac{\left(1 - \tan\frac{\varphi}{2}\right)\left(1 - \tan\frac{\varphi}{2}\right)}{\left(1 + \tan\frac{\varphi}{2}\right)\left(1 + \tan\frac{\varphi}{2}\right)}$$

$$= \frac{\left(1 - \tan\frac{\varphi}{2}\right)^2}{\left(1 + \tan\frac{\varphi}{2}\right)^2}$$

$$= \frac{\left(1 - \frac{\sin\varphi/2}{\cos\varphi/2}\right)^2}{\left(1 + \frac{\sin\varphi/2}{\cos\varphi/2}\right)^2}$$

$$= \frac{\left(\cos\frac{\varphi}{2} - \sin\frac{\varphi}{2}\right)^2}{\left(\cos\frac{\varphi}{2} + \sin\frac{\varphi}{2}\right)^2}$$

$$= \frac{\cos^2\frac{\varphi}{2} + \sin^2\frac{\varphi}{2} - 2\cos\frac{\varphi}{2}\sin\frac{\varphi}{2}}{\cos^2\frac{\varphi}{2} + \sin^2\frac{\varphi}{2} + 2\sin\frac{\varphi}{2}\cos\frac{\varphi}{2}}$$

$$= \frac{1 - 2\sin\frac{\varphi}{2}\cos\frac{\varphi}{2}}{1 + 2\sin\frac{\varphi}{2}\cos\frac{\varphi}{2}}$$

$$= \frac{1 - \sin\varphi}{1 + \sin\varphi} \tag{8.18}$$

$$\text{Mechanical advantage} = \frac{\text{weight lifted}}{\text{force applied}} = \frac{W}{f} = \frac{W}{\frac{Wr}{L}\tan(\alpha + \varphi)}$$

$$= \frac{L}{r}\cot(\alpha + \varphi) \tag{8.19}$$

$$\text{Velocity ratio} = \frac{\text{distance moved by force/rev.}}{\text{distance moved by load/rev.}}$$

or

$$VR = \frac{2\pi L}{l} = \frac{L}{\frac{l}{\pi d}\frac{d}{2}} = \frac{L}{r\tan\alpha} \tag{8.20}$$

Observe that the angle of friction should always be more than the helix angle of the screw. Otherwise, the load will slide down of its own under the weight W. Such a condition is known as *overhauling of screws*. Thus, α is not to be more than φ to prevent the nut from turning back. Such a screw is known as *self-locking screw*. When $\alpha = \varphi$, the nut will be on the point of reversing and

$$\text{screw efficiency} = \frac{\tan\alpha}{\tan(\alpha + \varphi)} = \frac{\tan\varphi}{\tan 2\varphi} \approx \frac{1}{2} \tag{8.21}$$

Thus, reversal of the nut is avoided if the efficiency of the thread is less than 50% (approximately).

Note that in case of square threads, as the helix angle α of screw threads is usually very small (3° – 8°), the faces of the threads are normal to the axis of spindle and thus, the normal reaction $\mathbf{R}_n$ is almost equal to the load **W** ($\cos\alpha \approx 1$).

V-Threads

In case of V-threads, the faces are inclined to the axis of the spindle even if the helix angle is neglected. Figure 8.7 shows a section through a V-thread, in which 2β is the angle between the faces of the thread (α has not been considered Thus, not shown). If $\mathbf{R}_n$ is the normal reaction then clearly the axial component of $\mathbf{R}_n$ must be equal to **W**, i.e.,

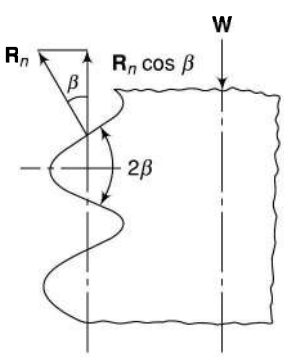

Fig. 8.7

$$W = R_n \cos\beta$$

or

$$R_n = \frac{W}{\cos\beta}$$

Friction force on the surface $= \mu R_n$

$$= \mu\frac{W}{\cos\beta}$$

$$= \frac{\mu}{\cos\beta} W$$

$$= \mu' W \tag{8.22}$$

This shows that the coefficient of friction μ (or tan φ) as used in relations for the square threads is to be replaced by μ' or $\mu/\cos\beta$ or tan $\varphi/\cos\beta$ to adapt them to V-threads.

Example 8.3 *A square-threaded bolt with a core diameter of 25 mm and a pitch of 10 mm is tightened by screwing a nut. The mean diameter of the bearing surface of the nut is 60 mm. The coefficient of friction for the nut and the bolt is 0.12 and for the nut and the bearing surface, it is 0.15. Determine the force required at the end of a 400-mm long spanner if the load on the bolt is 12 kN.*

Solution:

The mean diameter of the threaded bolt = 25 + (10/2) = 30 mm

Now, $\tan\alpha = \dfrac{p}{\pi d} = \dfrac{6}{\pi \times 30} = 0.0636$, $\alpha = 3.64°$

$\tan\phi = 0.12$ $\qquad \phi = 6.84°$

$T = Fr = W \tan(\alpha + \varphi)\, r$

$= 12\,000 \tan(3.64° + 6.84°) \times (28/2)$

$= 31\,076$ N.m

Torque due to friction between nut and bearing surface = $(\mu W)\, r$

$= 0.15 \times 12\,000 \times 30$

$= 54\,000$ N.mm

Total friction torque required = 31076 + 54000 = 85076 N.mm

If F' is the force to be applied at the end of spanner,

$F' \times l = T$

$F' \times 400 = 85076$

$F' = \underline{212.7 \text{ N}}$

Example 8.4 *The cutting speed of a broaching machine is 9 m per minute. The cutter of the machine is pulled by a square-threaded screw with a nominal diameter of 60 mm and a pitch 12-mm. The operating nut takes an axial load of 500 N on a flat surface of 80 mm external diameter and 48-mm internal diameter. Determine the power required to rotate the operating nut. Take μ = 0.14 for all contact surfaces on the nut.*

Solution: The mean diameter of the threaded bolt = 60 – (12/2) = 54 mm

Now, $\tan\alpha = \dfrac{p}{\pi d} = \dfrac{12}{\pi \times 54} = 0.0707$, $\alpha = 4.046°$

$\mu = \tan\phi = 0.14$, $\qquad \phi = 7.97°$

$T = Fr = W \tan(\alpha + \varphi)\, r$

$= 500 \tan(4.05° + 7.97°) \times (54/2)$

$= 2873$ N.mm

Mean radius of the flat surface = $(r_1 + r_2)/2$

$= (40 + 24)/2 = 32$ mm

Torque due to friction between nut and bearing surface = $(\mu W)\, r$

$= 0.14 \times 500 \times 32$

$= 2240$ N.mm

Total friction torque required = 2873 + 2240 = 5113 N.mm or 5.113 N.m

As the threaded screw advances a distance equal to one pitch in one revolution,

The cutting speed $= p \times N$

or $\quad 9\,000 = 12 \times N$

or $\quad N = 750$ rpm

$\therefore$ Power required to operate the nut = $T \times \omega$ = $5.113 \times \dfrac{2\pi \times 750}{60} = \underline{401.6 \text{ W}}$

Example 8.5 *Two railway coaches are coupled with the help of two tie rods of a turn buckle with right and left handed-threads having single-start square threads. The pitch and mean diameter of the threads are 8 mm and 30 mm respectively. What will be the work done in bringing the two coaches*

closer through a distance of 160 mm against a steady load of 2 kN? Take $\mu = 0.12$.

Solution: Figure 8.8 shows the outline of a turn buckle.

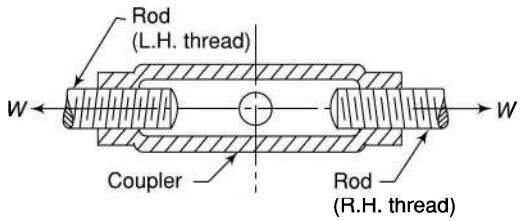

Fig. 8.8

$p = 8$ mm $\quad \mu = 0.12$

$d = 30$ mm $\quad W = 2000$ N

$$\tan\alpha = \frac{P}{\pi d} = \frac{8}{\pi \times 30} = 0.0848 \text{ or } \alpha = 4.85°$$

$$\mu = \tan\varphi = 0.12 \text{ or } \varphi = 6.84°$$

Torque on each rod $= F.r = W \tan(\alpha + \varphi) \times r$

$= 2000 \times \tan(4.85° + 6.84°) \times 0.015$

$= 6.21$ N.m

Total torque on the coupling nut $= 2 \times 6.21 = 12.42$ N.m

In one complete revolution of the rod, each coach is moved through a distance equal to the pitch.

Number of turns required to move the coaches through a distance of 160 mm

$= 160/(2 \times 8) = 10$

Work done, $W = T.\theta = 12.42 \times 2\pi \times 10 = 780.4$ N.m

$$\eta = \frac{\tan\alpha}{\tan(\alpha + \varphi)} = \frac{\tan 4.85°}{\tan(4.85° + 6.84°)}$$

$= 0.41$ or 41%

Example 8.6 *A whitworth bolt with an angle of V-threads as 55° has a pitch of 6 mm and a mean diameter of 32 mm. The mean radius of the bearing surface where the nut is tightened is 20 mm. Determine the force required at the end of a 400-mm long spanner when the load on the bolt is 8 kN. The coefficient of friction for the nut and the bolt is 0.1 and for the nut and the bearing surface is 0.15.*

Solution:

Virtual coefficient of friction,

$$\mu' = \frac{\mu}{\cos\beta} = \frac{0.1}{\cos 27.5°} = 0.113$$

or $\quad \tan\varphi = 0.113 \quad$ or $\quad \varphi = 6.45°$

$$\tan\alpha = \frac{p}{\pi d} = \frac{6}{\pi \times 32} = 0.0597, \ \alpha = 3.42°$$

Torque transmitted $= F.r = W \tan(\alpha + \varphi) \times r$

$= 8000 \times \tan(3.42° + 6.45°) \times 16$

$= 22\,271$ N.mm

Torque due to friction between nut and bearing surface $= (\mu W)\, r$

$= 0.15 \times 8000 \times 20$

$= 24\,000$ N.mm

Total friction torque required $= 22\,271 + 24\,000 = 46\,271$ N.mm

If F' is the force to be applied at the end of spanner,

$$F' \times l = T$$

$$F' \times 400 = 46\,271$$

$$F' = \underline{115.7 \text{ N}}$$

8.6 SCREW JACK

A screw jack is a device used to lift heavy loads by applying a smaller effort at its handle. Figure 8.9 shows a common type of screw jack. It consists of a threaded screw that fits into the inner threads of the nut. The load is placed on the head of the threaded screw which is rotated by applying an effort at the end of a lever for lifting or lowering the load. The load placed on the head may rotate with the screw or it may be put on a swivel head (bearing) and thus, may not rotate with the screw. In that case, friction between the swivel head and the screw rod is also considered.

Expressions for the torque applied by the screw jack and its efficiency are given below:

Torque required to lift the load, $T = Fr = W \tan(\alpha + \varphi)\, r$

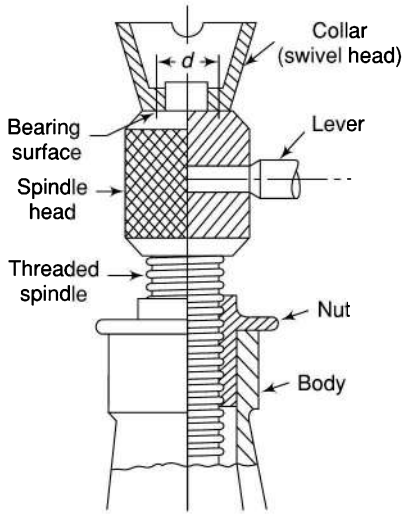

Fig. 8.9

Torque required to lower the load, $T = Fr = W \tan(\varphi - \alpha)\, r$

Mechanical advantage $= \dfrac{W}{P}$

Efficiency, $\eta = \dfrac{\tan\alpha}{\tan(\alpha + \varphi)}$

Example 8.7 *A load of 15 kN is raised by means of a screw jack. The mean diameter of the square threaded screw is 42 mm and the pitch is 10 mm. A force of 120 N is applied at the end of a lever to raise the load. Determine the length of the lever to be used and the mechanical advantage obtained. Is the screw self-locking? Take $\mu = 0.12$.*

Solution:

$$\tan\alpha = \frac{p}{\pi d} = \frac{10}{\pi \times 42} = 0.0758, \quad \alpha = 4.335^\circ$$

$\mu = \tan\phi = 0.12$, $\phi = 6.843^\circ$

$$T = Fr = W \tan(\alpha + \varphi)\, r$$
$$= 15\,000 \tan(4.335^\circ + 6.843^\circ) \times (42/2)$$
$$= 62\,244 \text{ N.m}$$

Let l is be the force to be applied at the end of lever,

$$F \times l = T$$
$$120 \times l = 62\,244$$
$$l = \underline{518.7 \text{ mm}}$$

$$\text{MA} = \frac{W}{P} = \frac{15\,000}{120} = \underline{125}$$

Efficiency,

$$\eta = \frac{\tan\alpha}{\tan(\alpha + \varphi)} = \frac{\tan 4.335^\circ}{\tan(4.335^\circ + 6.843^\circ)} = 0.384$$

As the efficiency is less than 50%, therefore, the screw is self-locking.

Example 8.8 *The following data relate to a screw jack:*
Pitch of the threaded screw = 8 mm
Diameter of the threaded screw = 40 mm
Coefficient of friction between screw and nut = 0.1
Load = 20 kN

Assuming that the load rotates with the screw, determine the

(i) ratio of torques required to raise and lower the load

(ii) efficiency of the machine.

Solution:

$$\tan\alpha = \frac{P}{\pi d} = \frac{8}{\pi \times 40} = 0.0637$$

$\alpha = 3.64°$

$\mu = \tan\varphi = 0.1$ or $\phi = 5.71°$

(i) *To raise the load*

$T = Fr = W\tan(\alpha + \varphi)\, r$

$= 20\,000 \times \tan(3.64° + 5.71°) \times 0.02$

or $= 65.86$ N.m

To lower the load

$T = W\tan(\varphi - \alpha) r$

$= 20\,000 \times \tan(5.71° - 3.64°) \times 0.02$

$= 14.46$ N.m

$$\frac{\text{Torque to raise the load}}{\text{Torque to lower the load}} = \frac{65.86}{14.46} = \underline{4.56}$$

(ii) $$\text{Efficiency} = \frac{\tan\alpha}{\tan(\alpha + \varphi)}$$

$$= \frac{\tan 3.64°}{\tan(3.64° + 5.71°)} = 0.386 \text{ or } \underline{38.6\%}$$

Example 8.9 *In a screw jack, the diameter of the threaded screw is 40 mm and the pitch is 8 mm. The load is 20 kN and it does not rotate with the screw but is carried on a swivel head having a bearing diameter of 70 mm. The coefficient of friction between the swivel head and the spindle is 0.08 and between the screw and nut is 0.1. Determine the total torque required to raise the load and the efficiency.*

Solution:

$$\tan\alpha = \frac{P}{\pi d} = \frac{8}{\pi \times 40} = 0.0637$$

or $\alpha = 3.64°$

$\mu = \tan\varphi = 0.1$ or $\phi = 5.71°$

To raise the load,

$T = Fr = W\tan(\alpha + \varphi)\, r$

$= 20\,000 \times \tan(3.64° + 5.71°) \times 0.02$

or $= 65.86$ N.m

Torque due to collar friction $= (\mu W)r$

$= 0.08 \times 20\,000 \times 0.035$

$= 56$ N.m

Total friction torque required to raise the load

$= 65.86 + 56 = 121.86$ N.m

$$\eta = \frac{\text{Work done in lifting the load/rev.}}{\text{Work done by the applied force/rev.}}$$

$$= \frac{W \times p}{F \times \pi d} = \frac{W}{F}\tan\alpha$$

where $$F = \frac{T}{r} = \frac{121.86}{0.02} = 6093 \text{ N}$$

$$\eta = \frac{20\,000}{6093} \times 0.0637 = 0.209 \text{ or } \underline{20.9\%}$$

Example 8.10 *A screw jack raises a load of 16 kN through a distance of 150 mm. The mean diameter and the pitch of the screw are 56 mm and 10 mm respectively. Determine the work done and the efficiency of the screw jack when the*

1. *load rotates with the screw*
2. *loose head on which the load rests does not rotate with the screw and the outside and the inside diameters of the bearing surface of the loose head are 50 mm and 10 mm respectively.*

Take coefficient of friction for the screw and the bearing surface as 0.11.

Solution:

$h = 150$ mm; $W = 16 \times 10^3$ N; $p = 10$ mm; $d = 56$ mm; $\mu = 0.11$

$$\tan\alpha = \frac{p}{\pi d} = \frac{10}{\pi \times 56} = 0.0568$$

or $\alpha = 3.25°$

$\mu = \tan\varphi = 0.11$ or $\phi = 6.28°$

To raise the load,

$T = Fr = W\tan(\alpha + \varphi)\, r$

$= 16\,000 \times \tan(3.25° + 6.28°) \times 0.028$

$= 75.211$ N.m

In one complete revolution, the distance moved by the screw is equal to one pitch or 10 mm.

$\therefore$ number of revolutions made by the screw $= 150/10 = 15$

(a) *When load rotates with the screw*

Work done in raising the load/rev. $= T.\, 2\pi$

$\therefore$ total work done in raising the load

$= T.\, 2\pi N = 75.211 \times 2\pi \times 15 = \underline{7088 \text{ N.m}}$

$$\text{Efficiency} = \frac{\tan\alpha}{\tan(\alpha+\varphi)} = \frac{\tan 3.25°}{\tan(3.25° + 6.28°)}$$

$$= 0.338 \text{ or } \underline{33.8\%}$$

- Efficiency can also be found from

$$\eta = \frac{\text{Work done in lifting the load/rev.}}{\text{Work done by the applied force/rev.}}$$

$$= \frac{W \times p}{F \times \pi d} = \frac{W}{F}\tan\alpha$$

where $F = \dfrac{T}{r} = \dfrac{75.211}{0.028} = 2686$ N

$$\eta = \frac{16\,000}{2686} \times 0.0568 = 0.338 \text{ or } \underline{33.8\%}$$

(a) *When load does not rotates with the screw*
Mean radius of the bearing surface,

$$r = \frac{1}{2}\left(\frac{50+10}{2}\right) = 15 \text{ mm}$$

Torque due to collar friction = $(\mu W)r$

$= 0.11 \times 16\,000 \times 0.015$

$= 26.4$ N.m

Total friction torque required to raise the load = 75.211 + 26.4 = 101.61 N.m

Work done in raising the load =

$T.2\pi N = 101.611 \times 2\pi \times 15 = \underline{9577 \text{ N.m}}$

$$\eta = \frac{\text{Work done in lifting the load/rev.}}{\text{Work done by the applied force/rev.}}$$

$$= \frac{W \times p}{F \times \pi d} = \frac{W}{F}\tan\alpha$$

where $F = \dfrac{T}{r} = \dfrac{101.61}{0.028} = 3629$ N

$$\eta = \frac{16\,000}{3629} \times 0.0568 = 0.25 \text{ or } \underline{25\%}$$

8.7 WEDGE

A wedge is used to raise loads like a screw jack. It consists of three sliding pairs as shown in Fig. 8.10(a) formed by the frame *A*, wedge *B* and the slider *S*. When a force **F** is applied to the wedge, the slider is raised in the guides raising the load.

Mechanical efficiency of the wedge is defined as the ratio of the load raised when friction is considered to the load raised when friction is neglected while the force applied is the same.

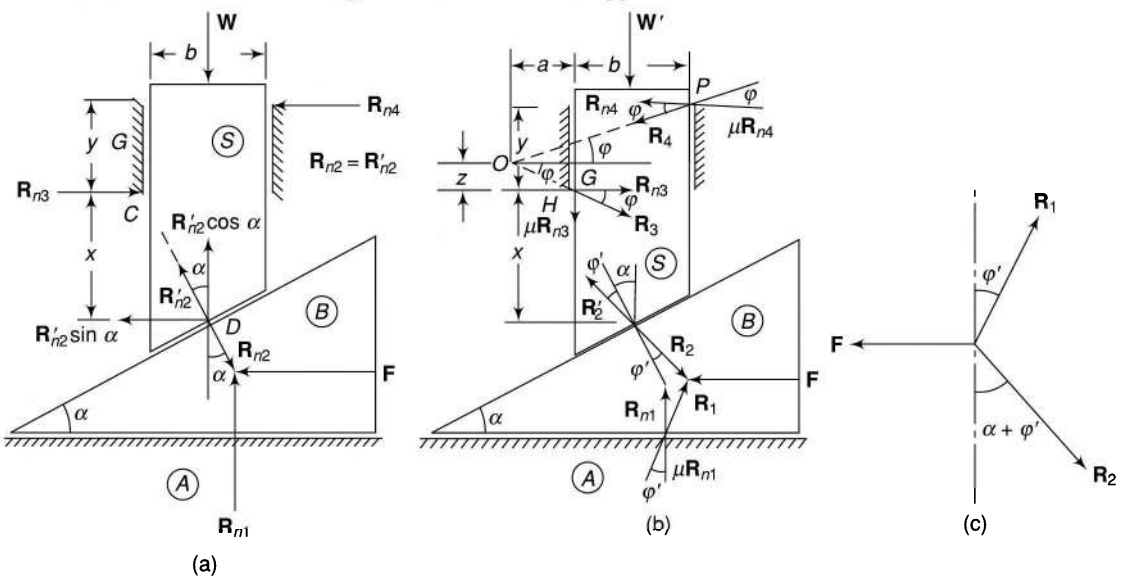

Fig. 8.10

1. Friction Neglected

(a) Equilibrium of Wedge The wedge is acted upon by [Fig. 8.10(a)] the

- horizontal force **F**
- reaction $\mathbf{R}_{n1}$ of the surface A in the vertical direction
- reaction $\mathbf{R}_{n2}$ of the slider, normal to slanting surface

For the equilibrium of the wedge, three forces must meet at a point and be balanced vectorially. Thus, $\mathbf{R}_{n2}$ passes through the point of intersection of **F** and $\mathbf{R}_{n1}$.

Also
$$F = R_{n2} \sin \alpha$$
$$R_{n1} = R_{n2} \cos \alpha = \frac{F}{\sin \alpha} \cos \alpha = F \cot \alpha$$

(b) Equilibrium of Slider The slider is acted upon by the

- weight **W**, vertically downwards
- reaction $\mathbf{R}'_{n2}$ of the wedge, equal and opposite to $\mathbf{R}_{n2}$
- reaction of the guide

The guide surface is vertical. Therefore, it exerts a horizontal reaction force on the slider. The three forces must also meet at a point, i.e., the reaction of the guide must also pass through D. However, in practice, the guide surface will be above D as shown in Fig. 8.10(a). Now, if it is assumed that the reaction of the guide acts through C, the lower end of the guide, and is equal to the horizontal component of $\mathbf{R}'_{n2}$ (= $\mathbf{R}'_{n2} \sin \alpha$), a clockwise couple will act on the slider. The slider is balanced only if two reaction forces $\mathbf{R}_{n3}$ at the lower end and $\mathbf{R}_{n4}$ on the upper end of the guide act as shown in the figure.

Let x = height of lower end of guide from D

y = height of the guide.

Balancing the horizontal and vertical components of forces,
$$R_{n3} - R_{n4} = R'_{n2} \sin \alpha = R_{n2} \sin \alpha = F$$
and
$$W = R'_{n2} \cos \alpha = R_{n2} \cos \alpha = R_{n1} = F \cot \alpha = \frac{F}{\tan \alpha} \tag{i}$$

Taking moments about D,
$$R_{n3} \times x = R_{n4} \times (x + y) = R_{n4}\, x + R_{n4}\, y$$
or
$$(R_{n3} - R_{n4}) = \frac{R_{n4} y}{x}$$
or
$$F = \frac{R_{n4} y}{x}$$
or
$$R_{n4} = \frac{Fx}{y}$$
and
$$R_{n3} = F + F\frac{x}{y} = F\left(1 + \frac{x}{y}\right)$$

2. Friction Considered

Let φ' = Angle of friction between frame A slider S and wedge B

φ = Angle of friction between guide G and slider S

(a) Equilibrium of Wedge The forces acting on the wedge are [Fig.8.10(b)] the

- horizontal force **F**
- reaction $\mathbf{R_1}$ inclined at an angle φ' with $\mathbf{R}_{n1}$. the wedge moves towards left and so the friction force acts towards right
- reaction $\mathbf{R_2}$ inclined at an angle φ' with $\mathbf{R}_{n2}$.

For equilibrium [Fig. 8.10(c)],

$$\frac{R_1}{\sin[90° + (\alpha + \varphi')]} = \frac{R_2}{\sin(90° + \varphi')} = \frac{F}{\sin[180° - (\alpha + 2\varphi')]}$$

$$\frac{R_1}{\cos(\alpha + \varphi')} = \frac{R_2}{\cos\varphi'} = \frac{F}{\sin(\alpha + 2\varphi')}$$

$$R_1 = \frac{\cos(\alpha + \varphi')}{\sin(\alpha + 2\varphi')} F$$

and

$$R_2 = \frac{\cos\varphi'}{\sin(\alpha + 2\varphi')} F$$

(b) Equilibrium of Slider The slider is acted upon by the

- reaction $\mathbf{R}'_2$ of the wedge, equal and opposite to $\mathbf{R}_2$
- weight $\mathbf{W}'$, vertically downwards
- reactions $\mathbf{R_3}$ and $\mathbf{R_4}$ of the guide

The motion of the guide is vertically upwards. Therefore, the friction force acts in the downward direction.

Let $\mathbf{R}_3$ and $\mathbf{R}_4$ intersect at O. the distances a and z are as shows in the diagram.

Taking moments about O,

$$R_2'[\sin(\alpha + \varphi')](x + z) + W'\left(a + \frac{b}{2}\right) - R_2'\cos(\alpha + \varphi')\left(a + \frac{b}{2}\right) = 0$$

$$W' = R_2'\left[\cos(\alpha + \varphi') - \frac{(x + z)\sin(\alpha + \varphi')}{\left(a + \frac{b}{2}\right)}\right]$$

$$= \frac{F\cos\varphi'}{\sin(\alpha + 2\varphi')}\left[\cos(\alpha + \varphi') - \frac{(x + z)\sin(\alpha + \varphi')}{\left(a + \frac{b}{2}\right)}\right] \qquad \text{(ii)}$$

Dividing (ii) by (i),

$$\eta = \frac{W'}{W} = \frac{\cos\varphi'\tan\alpha}{\sin(\alpha + 2\varphi')}\left[\cos(\alpha + \varphi') - \frac{(x + z)\sin(\alpha + \varphi')}{\left(a + \frac{b}{2}\right)}\right]$$

If x and b are comparatively small and can be neglected,

$$\eta = \frac{\cos\varphi'\tan\alpha}{\sin(\alpha + 2\varphi')}\left[\cos(\alpha + \varphi') - \frac{z}{a}\sin(\alpha + \varphi')\right]$$

$$= \frac{\cos\varphi' \tan\alpha}{\sin(\alpha + 2\varphi')}[\cos(\alpha + \varphi') - \tan\varphi \sin(\alpha + \varphi')] \tag{8.23}$$

$$= \frac{\cos\varphi' \tan\alpha}{\sin(\alpha + 2\varphi')}\left[\frac{\cos(\alpha + \varphi')\cos\varphi - \sin\varphi \sin(\alpha + \varphi')}{\cos\varphi}\right]$$

$$= \frac{\cos\varphi' \tan\alpha}{\sin(\alpha + 2\varphi')} \times \frac{\cos(\alpha + \varphi + \varphi')}{\cos\varphi} \tag{8.24}$$

If $\varphi = \varphi'$,

$$\eta = \frac{\tan\alpha}{\tan(\alpha + 2\varphi)} \tag{8.25}$$

Example 8.11 *Determine the efficiency of the wedge shown in Fig. 8.10(a). The angle of the wedge is 30° and coefficient of friction for the wedge and the slider is 8° and for the guide and the slider, it is 6°. Determine the efficiency.*

Solution:

$\mu = \tan\varphi = \tan 6° = 0.105$

From Eq. (8.24),

$$\eta = \frac{\cos\varphi' \tan\alpha}{\sin(\alpha + 2\varphi')} \times \frac{\cos(\alpha + \varphi + \varphi')}{\cos\varphi}$$

$$= \frac{\cos 8° \tan 30°}{\sin(30° + 16°)} \frac{\cos(30° + 6° + 8°)}{\cos 6°}$$

$= 0.547$

8.8 PIVOTS AND COLLARS

When a rotating shaft is subjected to an axial load, the thrust (axial force) is taken either by a pivot or a collar. Examples are the shaft of a steam turbine and propeller shaft of a ship.

Collar Bearing

A collar bearing or simply a collar is provided at any position along the shaft and bears the axial load on a mating surface.

The surface of the collar may be plane (flat) normal to the shaft (Fig. 8.11) or of conical shape (Fig. 8.12).

Pivot Bearing

When the axial load is taken by the end of the shaft which is inserted in a recess to bear the thrust, it is called a *pivot bearing* or simply a *pivot*. It is also known as *footstep bearing*.

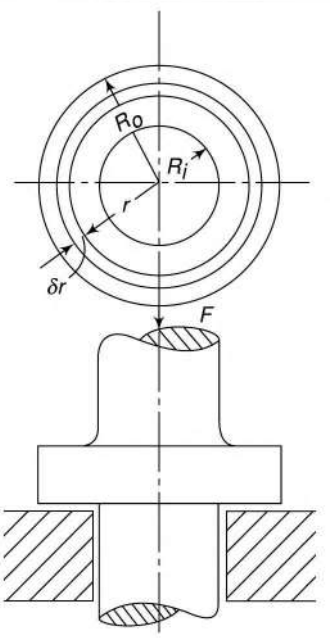

Fig. 8.11

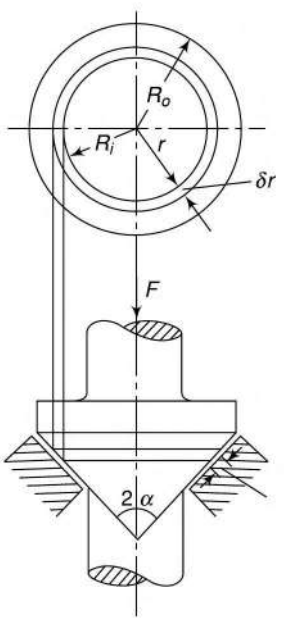

Fig. 8.12

The surface of the pivot can also be flat or of conical shape [Figs. 8.13(a) and (b)].

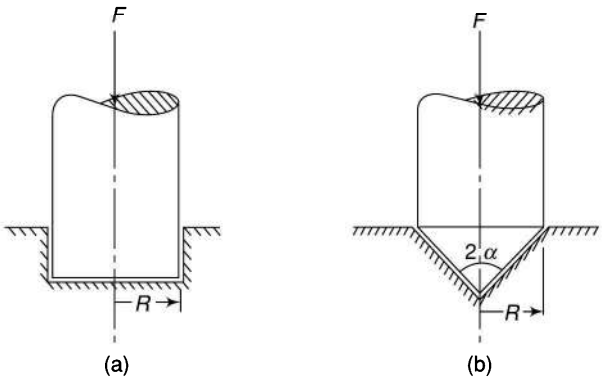

Fig. 8.13

Uniform Pressure and Uniform Wear

Friction torque of a collar or a pivot bearing is calculated, usually, on the basis of two assumptions. Each assumption leads to a different value of torque. In one case, it is assumed that the intensity of pressure on the bearing surface is constant whereas in the second case, it is the uniform wearing of the bearing surface.

Under the first assumption, pressure is assumed to be uniform over the surface area and the intensity of pressure is given by (Fig. 8.11).

$$\text{Pressure} = \frac{\text{axial force}}{\text{cross-sectional area}}$$

or

$$p = \frac{F}{\pi (R_0^2 - R_i^2)} \tag{8.26}$$

where R_o = outer radius of the collar
R_i = inner radius of the collar

For uniform wear over an area, the intensity of pressure should vary inversely proportional to the elementary areas, i.e., it should decrease with the increase in the elementary area and vice-versa. This can be illustrated by drawing a line with a chalk. In doing so, a little quantity of chalk is worn from the stick. Now, if it is desired that the chalk is worn by the same amount, but the length of the line is doubled, the pressure on the chalk has to be reduced to half that in the previous case. Therefore, for uniform wear, product of the pressure applied and the distance travelled must be constant. For uniform wear of the surface, let

p_1 = normal pressure between two surfaces at radius r_1
p_2 = normal pressure between two surfaces at radius r_2
b = width of the surface at radii r_1 and r_2 (equal width)

$$p_1 \times \text{area at } r_1 = p_2 \times \text{area at } r_2$$

$$p_1 \times 2\pi r_1 \times b = p_2 \times 2\pi r_2 \times b$$

or $$p_1 r_1 = p_2 r_2$$

or $$pr = \text{constant} \tag{8.27}$$

Thus, in case of uniform weariness of the two surfaces, product of the normal pressure and the corresponding radius must be constant. This means the pressure is less where the radius is more and vice-versa. Pressure on an elemental area at radius r can be found as given below.

$$\text{Axial force, } F = \int_{R_i}^{R_o} \text{Axial force on the elemental area}$$

$$= \int_{R_i}^{R_o} \text{Pressure on the element} \times \text{Area}$$

$$= \int_{R_i}^{R_o} p \times 2\pi r dr$$

$$= \int_{R_i}^{R_o} \frac{C}{r} \times 2\pi r dr \qquad (p.r = C)$$

$$= \int_{R_i}^{R_o} 2\pi C.dr$$

$$= (2\pi Cr)_{R_i}^{R_o}$$

$$= 2\,\pi\,C\,(R_o - R_i)$$

$$= 2\,\pi\,pr\,(R_o - R_i)$$

or pressure intensity p at a radius r of the collar,

$$p = \frac{F}{2\pi r\,(R_o - R_i)} \qquad (8.28)$$

In a flat pivot, in which $R_i = 0$, the pressure would be infinity at the centre of the bearing ($r = 0$), which cannot be true. Thus, the uniform wear theory has a flaw in it.

Collars and pivots, using the above two theories, have been analysed below:

Collars

(i) Flat Collar

Let p = uniform normal pressure over an area
F = axial thrust
N = speed of the shaft
μ = coefficient of friction between the two surfaces

Consider an element of width δr of the collar at radius r. Friction force on the element (Fig. 8.10),

$$\delta F = \mu \times \text{axial force}$$
$$= \mu \times p \times \text{area of the element}$$
$$= \mu \times p \times 2\,\pi\,r\,\delta r$$

Friction torque about the shaft axis,

$$\delta T = \delta F \times r$$
$$= \mu \times p \times 2\ \pi\,r\,\delta r \times r$$
$$= 2\,\mu\,p\,\pi\,r^2\,\delta r$$

$$\text{Total friction torque}, T = \int_{R_i}^{R_o} 2\mu p \pi r^2 dr \qquad (8.29)$$

(a) With Uniform Pressure Theory Pressure is uniform over the whole area and is given by

$$p = \frac{F}{\pi(R_o^2 - R_i^2)}$$

$$T = \int_{R_i}^{R_o} 2\mu\pi r^2 \frac{F}{\pi\,(R_o^2 - R_i^2)} dr$$

$$= \int_{R_i}^{R_o} \frac{2\mu F}{R_o^2 - R_i^2} r^2 dr$$

$$= \left[\frac{2\mu F}{R_o^2 - R_i^2} \cdot \frac{r^3}{3} \right]_{R_i}^{R_o}$$

$$= \frac{2\mu F (R_o^3 - R_i^3)}{3(R_o^2 - R_i^2)} \tag{8.30}$$

(b) With Uniform Wear Theory Pressure p at a radius r of the collar is given by

$$p = \frac{F}{2\pi r (R_o - R_i)}$$

$$\therefore \quad T = \int_{R_i}^{R_o} 2\mu\pi r^2 \frac{F}{2\pi r (R_o - R_i)} dr$$

$$= \int_{R_i}^{R_o} \frac{\mu F r}{R_o - R_i} dr$$

$$= \frac{\mu F (R_o^2 - R_i^2)}{2(R_o - R_i)}$$

$$= \frac{\mu F}{2} (R_o + R_i)$$

$$= \mu F \times \text{Mean radius of the collar bearing} \tag{8.31}$$

(ii) Conical Collar (Frustum of Cone) This is also known as *trapezoidal* or *truncated conical pivot.* Consider an elementary area of width δr at a radius r of the bearing (Fig. 8.11).

$$\text{Normal force on the elementary area} = \frac{\text{Axial force}}{\sin\alpha}$$

$$\text{Normal pressure on the elementary area} = \frac{\text{Axial force}}{\sin\alpha} \cdot \frac{1}{\text{Surface area}}$$

$$= \frac{\text{Axial force}}{\sin\alpha} \cdot \frac{1}{2\pi r.\delta r / \sin\alpha}$$

$$= \frac{\text{Axial force}}{2\pi r.\delta r}$$

$$= \frac{\text{Axial force}}{\text{Area} \perp \text{ to axial force}}$$

$$= \text{Axial pressure } (p)$$

i.e., normal pressure on the surface is equal to the axial pressure on a flat collar surface.

Friction force on the element,

$$\delta F = \mu \times p \times \text{Area of the element}$$

$$= \mu \times p \times 2\pi r \frac{\delta r}{\sin \alpha}$$

Friction torque about the shaft axis,

$$\delta T = \delta F \times r = \frac{2\mu p \pi r^2}{\sin \alpha} \delta r$$

Total friction torque,

$$T = \int_{R_i}^{R_o} \frac{2\mu p \pi r^2}{\sin \alpha} dr \tag{8.32}$$

(a) With Uniform Pressure Theory

$$T = \int_{R_i}^{R_o} \frac{2\mu \pi r^2}{\sin \alpha} \frac{F}{\pi (R_o^2 - R_i^2)} dr$$

$$= \frac{2\mu F}{\sin \alpha (R_o^2 - R_i^2)} \left[\frac{r^3}{3} \right]_{R_i}^{R_o}$$

$$= \frac{2\mu F}{3 \sin \alpha} \left[\frac{R_o^3 - R_i^3}{R_o^2 - R_i^2} \right] \tag{8.33}$$

i.e., the torque is increased in the ratio $\frac{1}{\sin \alpha}$ from that for flat collars.

(b) With Uniform Wear Theory

$$T = \int_{R_i}^{R_o} \frac{2\mu \pi r^2}{\sin \alpha} \frac{F}{2\pi r (R_o - R_i)} dr$$

$$= \int_{R_i}^{R_o} \frac{\mu F}{\sin \alpha (R_o - R_i)} r dr$$

$$= \frac{\mu F}{\sin \alpha (R_o - R_i)} \left(\frac{r^2}{2} \right)_{R_i}^{R_o}$$

$$= \frac{\mu F}{2 \sin \alpha} (R_o + R_i) \tag{8.34}$$

$$= \frac{\mu F}{\sin \alpha} \times \text{mean radius of the bearing}$$

i.e., the torque is increased by $\frac{1}{\sin \alpha}$ times from that for flat collars.

Pivots

Expressions for torque in case of pivots can directly be obtained from the expressions for collars by inserting the values $R_i = 0$ and $R_o = R$.

(i) Flat Pivot

(a) Uniform pressure theory, $T = \frac{2}{3}\mu FR$ (8.35)

(b) Uniform wear theory, $T = \frac{1}{2}\mu FR$ (8.36)

(ii) Conical Pivot

(a) Uniform pressure theory, $T = \frac{2\mu FR}{3\sin\alpha}$ (8.37)

(b) Uniform wear theory, $T = \frac{\mu FR}{2\sin\alpha}$ (8.38)

The above expressions reveal that the value of the friction torque is more when the uniform pressure theory is applied. In practice, however, it has been found that the value of the friction torque lies in between that given by the two theories. To be on the safer side, out of the two theories, one is selected on the basis of the use.

A clutch plate transmits torque through the force of friction. Thus, though a clutch will surely be transmitting torque given by the uniform wear theory (lower value), it is not necessary that the clutch can also transmit a torque given by the uniform pressure theory (higher value). Therefore, it is safer to say that the clutch transmits a maximum torque based on the uniform wear theory and design it accordingly. However, the actual torque transmitted will be a little higher.

On the other hand, while calculating the power loss in a bearing, it is to be on the basis of uniform pressure theory, though the actual power loss will be a little less than that calculated.

Example 8.12 *In a thrust bearing, the external and the internal diameters of the contacting surfaces are 320 mm and 200 mm respectively. The total axial load is 80 kN and the intensity of pressure is 350 kN/m². The shaft rotates at 400 rpm. Taking the coefficient of friction as 0.06, calculate the power lost in overcoming the friction. Also, find the number of collars required for the bearing.*

Solution:

$R_o = 0.16$ m $\quad F = 80 \times 10^3$ N

$R_i = 0.1$ m $\quad \mu = 0.06$

$N = 400$ rpm $\quad p = 350 \times 10^3$ N/m²

Using uniform pressure theory as we are to find the power loss in a bearing,

$$T = \frac{2}{3}\mu F\left(\frac{R_o^3 - R_i^3}{R_o^2 - R_i^2}\right)$$

$$= \frac{2}{3} \times 0.06 \times 80 \times 10^3 \left[\frac{(0.16)^3 - (0.10)^3}{(0.16)^2 - (0.10)^2}\right]$$

$$= 3200 \times 0.1985$$

$$= 635.12 \text{ N.m}$$

$$P = T\omega = T\frac{2\pi N}{60} = 635.12 \times \frac{2\pi \times 400}{60}$$

$$= 26\,602 \text{ W or } 26.602 \text{ kW}$$

$$\text{Number of collars} = \frac{\text{total load}}{\text{load per collar}}$$

$$= \frac{F}{p \times \pi (R_o^2 - R_i^2)}$$

$$= \frac{80 \times 10^3}{350 \times 10^3 \times \pi [(0.16)^2 - (0.10)^2]}$$

=4.66 or <u>5 collars</u>

Example 8.13 *A conical pivot with angle of cone as 100° supports a load of 18 kN. The external radius is 2.5 times the internal radius. The shaft rotates at 150 rpm. If the intensity of pressure is to be 300 kN/m² and coefficient of friction as 0.05, what is the power lost in working against the friction?*

Solution:

$F = 18$ kN $\quad R_o = 2.5R_i$

$p = 300$ kN/m^2 $\quad N = 150$ rpm

$\mu = 0.05 \quad \alpha = 50°$

In case of uniform pressure, normal pressure

$$p = \frac{F}{\pi(R_o^2 - R_i^2)}$$

or $$300 \times 10^3 = \frac{18 \times 10^3}{\pi[(2.5R_i)^2 - R_i^2]}$$

or $$(2.5R_i)^2 - R_i^2 = \frac{18}{300 \times \pi}$$

$R_i = 0.0603$ m

$R_o = 0.0603 \times 2.5 = 0.1508$ m

$$T = \frac{2}{3}\frac{\mu F}{\sin\alpha}\left[\frac{R_o^3 - R_i^3}{R_o^2 - R_i^2}\right]$$

$$T = \frac{2}{3} \times \frac{0.05 \times 18\,000}{\sin 50°}$$

$$\left[\frac{(0.1508)^3 - (0.0603)^3}{(0.1508)^2 - (0.0603)^2}\right] = 131.6 \text{ N.m}$$

$$P = T\omega = T\frac{2\pi N}{60} = 131.6 \times \frac{2\pi \times 150}{60}$$

$= 2067$ W or <u>2.067kW</u>

Example 8.14 *A thrust bearing of a propeller shaft consists of a number of collars. The shaft is of 400 mm diameter and rotates at a speed of 90 rpm. The thrust on the shaft is 300 kN. If the intensity of pressure is to be 200 kN/m^2 and coefficient of friction is 0.06, determine external diameter of the collars and the number of collars. The power lost in friction is not to exceed 48 kW.*

Solution:

$R_i = 200$ mm; $N = 90$ rpm; $F = 300 \times 10^3$ N;

$p = 200$ kN/m^2 = 0.2 N/mm^2

$P = 48$ kW; $\mu = 0.06$

$$P = T.\frac{2\pi N}{60} \text{ or } 48\,000 = T.\frac{2\pi \times 90}{60}$$

or $T = 5093$ N.m $= 5093 \times 10^3$ N.mm

Let R_o be the external radius of the collar.

$$T = \frac{2}{3}\mu F\left(\frac{R_o^3 - R_i^3}{R_o^2 - R_i^2}\right)$$

$$= \frac{2}{3}\mu F\left(\frac{(R_o - R_i)(R_o^2 + R_i^2 + R_oR_i)}{(R_o - R_i)(R_o + R_i)}\right)$$

$$= \frac{2}{3}\mu F\left(\frac{R_o^2 + R_i^2 + R_oR_i}{R_o + R_i}\right)$$

or $$5093 \times 10^3 = \frac{2}{3} \times 0.06 \times 300 \times 10^3 \left[\frac{R_o^2 + 200^2 + 200R_o}{R_o + 200}\right]$$

or $$424.4(R_o + 200) = R_o^2 + 200^2 + 200R_o$$

or $$R_o^2 - 224.4R_o - 44\,880 = 0$$

or $$R_o = \frac{224.4 \pm \sqrt{224.4^2 + 4 \times 44\,880}}{2}$$

$= 352$ mm (Taking positive sign only)

In case of uniform pressure, normal pressure

$$p = \frac{F}{\pi n(R_o^2 - R_i^2)}$$

or $$0.2 = \frac{300 \times 10^3}{\pi n[352^2 - 200^2]}$$

$n = 5.69$

Thus, number of collars = 6

8.9 FRICTION CLUTCHES

A clutch is a device used to transmit the rotary motion of one shaft to another when desired. The axes of the two shafts are coincident.

In friction clutches, the connection of the engine shaft to the gear-box shaft is affected by friction between two or more rotating concentric surfaces. The surfaces can be pressed firmly against one another when engaged and the clutch tends to rotate as a single unit.

1. Disc Clutch (Single-plate Clutch)

A disc clutch consists of a clutch plate attached to a splined hub which is free to slide axially on splines cut on the driven shaft. The clutch plate is made of steel and has a ring of friction lining on each side. The engine shaft supports a rigidly fixed flywheel.

A spring-loaded pressure plate presses the clutch plate firmly against the flywheel when the clutch is engaged. When disengaged, the springs press against a cover attached to the flywheel. Thus, both the flywheel and the pressure plate rotate with the input shaft. The movement of the clutch pedal is transferred to the pressure plate through a thrust bearing.

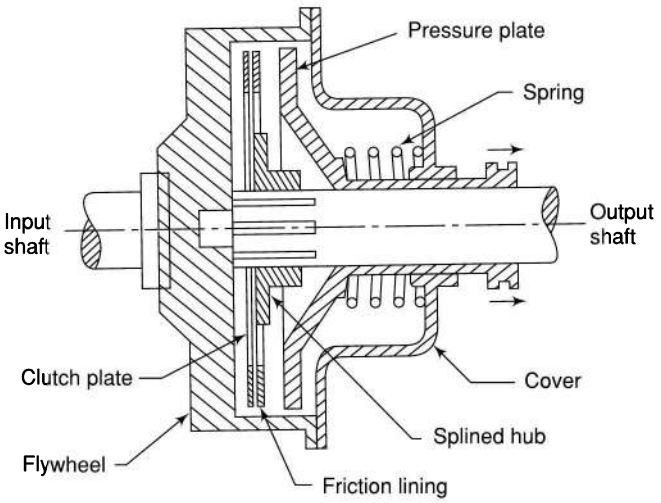

Fig. 8.14

Figure 8.14 shows the pressure plate pulled back by the release levers and the friction linings on the clutch plate are no longer in contact with the pressure plate or the flywheel. The flywheel rotates without driving the clutch plate and thus, the driven shaft.

When the foot is taken off the clutch pedal, the pressure on the thrust bearing is released. As a result, the springs become free to move the pressure plate to bring it in contact with the clutch plate. The clutch plate slides on the splined hub and is tightly gripped between the pressure plate and the flywheel. The friction between the linings on the clutch plate, and the flywheel on one side and the pressure plate on the other, cause the clutch plate and hence the driven shaft to rotate.

In case the resisting torque on the driven shaft exceeds the torque at the clutch, clutch slip will occur.

2. Multi-plate Clutch

In a multi-plate clutch, the number of frictional linings and the metal plates is increased which increases the capacity of the clutch to transmit torque. Figure 8.15 shows a simplified diagram of a multi-plate clutch.

The friction rings are splined on their outer circumference and engage with corresponding splines on the flywheel. They are free to slide axially. The friction material Thus, rotates with the flywheel and the engine shaft. The number of friction rings depends upon the torque to be transmitted.

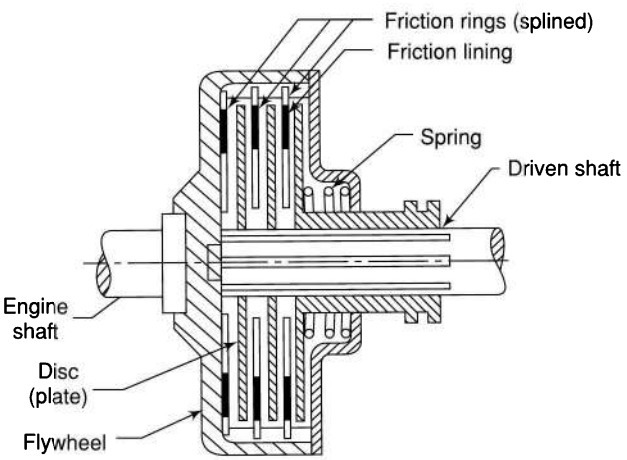

Fig. 8.15

The driven shaft also supports discs on the splines which rotate with the driven shaft and can slide axially. If the actuating force on the pedal is removed, a spring presses the discs into contact with the friction rings and the torque is transmitted between the engine shaft and the driven shaft.

If n is the total number of plates both on the driving and the driven members, the number of active surfaces will be n–1.

3. Cone Clutch

In a cone clutch (Fig. 8.16), the contact surfaces are in the form of cones. In the engaged position, the friction surfaces of the two cones A and B are in complete contact due to spring pressure that keeps one cone pressed against the other all the time.

When the clutch is engaged, the torque is transmitted from the driving shaft to the driven shaft through the flywheel and the friction cones. For disengaging the clutch, the cone B is pulled back through a lever system against the force of the spring.

The advantage of a cone clutch is that the normal force on the contact surfaces is increased. If F is the axial force, F_n the normal force and α the semi-cone angle of the clutch then for a conical collar with uniform wear theory,

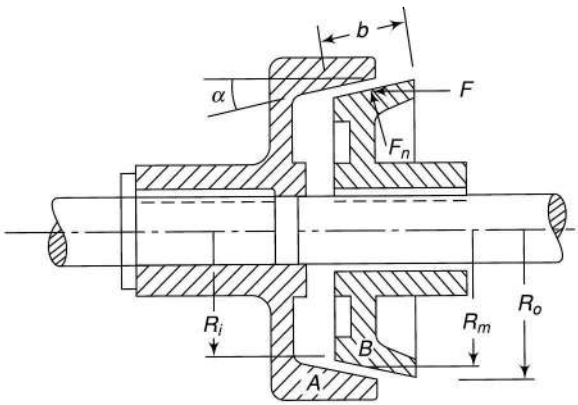

Fig. 8.16

$$F_n = \frac{F}{\sin\alpha}$$

$$= \frac{2\,\pi pr(R_o - R_i)}{\sin\alpha} \qquad \text{(Refer Eq. 8.28)}$$

$$= 2\pi pr.b \qquad \left(\sin\alpha = \frac{R_o - R_i}{b}\right) \qquad (8.39)$$

where b is the width of the cone face. Remember as pr is constant in case of uniform wear theory which is applicable to clutches to be on the safer side, p is to be the normal pressure at the radius considered, i.e., at the inner radius it is $p_i r_i$ and at the mean radius $p_m R_m$.

Also,

$$T = \frac{\mu F}{2\sin\alpha}(R_o + R_i) \qquad \text{(Eq. 8.34)}$$

$$= \frac{\mu F_n \sin\alpha}{\sin\alpha} \cdot \frac{(R_o + R_i)}{2}$$

$$= \mu F_n R_m \qquad (R_m = \text{Mean radius of the clutch})$$

However, cone clutches have become obsolete as small cone angles and exposure to dust and dirt tend to bind the two cones and it becomes difficult to disengage them.

4. Centrifugal Clutch

Centrifugal clutches are being increasingly used in automobiles and machines. A centrifugal clutch has a driving member consisting of four sliding blocks (Fig. 8.17). These blocks are kept in position by means

of flat springs provided for the purpose. As the speed of the shaft increases, the centrifugal force on the shoes increases. When the centrifugal force exceeds the resisting force of the springs, the shoes move forward and press against the inside of the rim and thus the torque is transmitted to the rim. In this way, the clutch is engaged only when the motor gains sufficient speed to take up the load in an effective manner. The outer surfaces of the shoes are lined with some friction material.

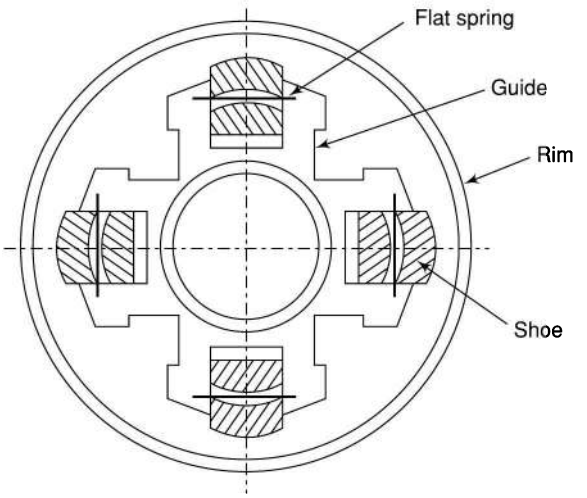

Fig. 8.17

Let

m = mass of each shoe
R = inner radius of the pulley rim
r = distance of centre of mass of each shoe from the shaft axis
n = number of shoes
ω = normal speed of the shaft in rad/s
ω' = Speed at which the shoe moves forward
μ = coefficient of friction between the shoe and the rim

Centrifugal force exerted by each shoe at the time of engagement with the rim = $mr\omega'^2$

This will be equal to the resisting force of the spring.

Centrifugal force exerted by each shoe at normal speed $= mr\omega^2$

Net normal force exerted by each shoe on the rim $= mr\omega^2 - mr\omega'^2$

$= mr(\omega^2 - \omega'^2)$

Frictional force acting tangentially on each shoe $= \mu\, mr(\omega^2 - \omega'^2)$

Frictional torque acting on each shoe $= \mu\, mr(\omega^2 - \omega'^2).R$

Total frictional torque acting $= \mu\, mr(\omega^2 - \omega'^2).R.n$ (8.40)

If p is the maximum pressure intensity exerted on the shoe then

$$mr(\omega^2 - \omega'^2) = p.lb$$

where l and b are the contact length and width of each shoe.

Usually, the clearance between the shoe and the rim is very small and is neglected. However, it can be taken into account if need be.

Example 8.15 *The inner and the outer radii of a single plate clutch are 40 mm and 80 mm respectively. Determine the maximum, minimum and the average pressure when the axial force is 3 kN.*

Solution: The maximum pressure will be at the inner radius,

$$F = 2\pi p_i R_i (R_o - R_i)$$

$$3000 = 2\pi \times p_i \times 0.04\ (0.08 - 0.04)$$

$$p_i = 298.4 \times 10^3\ \text{N/m}^2 \text{ or } 298.4\ \text{kN/m}^2$$

or maximum pressure = <u>298.4 kN/m²</u>

The minimum pressure will be at the outer radius,

$$F = 2\pi p_i R_i (R_o - R_i)$$

$$3000 = 2\pi \times p_i \times 0.08\ (0.08 - 0.04)$$

$$p_i = 149.2 \times 10^3\ \text{N/m}^2 \text{ or } 149.2\ \text{kN/m}^2$$

or minimum pressure = <u>149.2 kN/m²</u>

$$\text{The average pressure} = \frac{\text{Total normal force}}{\text{Cross-sectional area}}$$

$$= \frac{3000}{\pi(0.08^2 - 0.04^2)}$$

$= 198.9 \times 10^3$ N/m^2 or <u>198.9 kN/m^2</u>

Example 8.16 *A single plate clutch is required to transmit 8 kW at 1000 rpm. The axial pressure is limited to 70 kN/m^2. The mean radius of the plate is 4.5 times the radial width of the friction surface. If both the sides of the plate are effective and the coefficient of friction is 0.25, find the*

(i) inner and the outer radii of the plate and the mean radius

(ii) width of the friction lining

Solution:

$P = 8$ kW $\quad \mu = 0.25$

$N = 1000$ rpm

$$R_m = \frac{R_o + R_i}{2} = 4.5(R_o - R_i)$$

or $\quad R_o + R_i = 9(R_o - R_i)$

or $\quad 8\,R_o = 10\,R_i$

$R_o = 1.25\,R_i$

In case of power transmission through a clutch, it is safer to use the expressions obtained by uniform wear theory. In that case maximum pressure is at the inner radius, i.e., $p_i = 70$ kN/m^2

$P = T\omega$

or

$$8\,000 = T \times \frac{2\pi \times 1000}{60}$$

$T = 76.39$ N.m

(i) $T = \dfrac{\mu F}{2}(R_o + R_i) \times n$ (n = number of surfaces)

$$= \frac{\mu}{2}[2\pi p_i R_i (R_o - R_i)](R_o + R_i) \times 2$$

$$= \mu\,[2\pi \times 70 \times 10^3 \times R_i(1.25R_i - R_i)](1.25R_i + R_i)$$

$$= 0.25 \times 2 \times \pi \times 70 \times 10^3 \times 0.5625R_i^3$$

$76.39 = 61\,850R_i^3$

$\therefore\ R_i = 0.1073$ m

$R_o = 1.25 \times 0.1073 = 0.1341$ m

$R_m = (R_o - R_i)\,4.5 = (0.1341 - 0.1073) \times 4.5 = 0.$<u>1207 m</u>

(ii) $w = R_m/4.5 = 0.1207/4.5$

$= 0.0268$ m or 26.8 mm

Example 8.17 *A single-plate clutch transmits 25 kW at 900 rpm. The maximum pressure intensity between the plates is 85 kN/m^2. The outer diameter of the plate is 360 mm. Both the sides of the plate are effective and the coefficient of friction is 0.25. Determine the*

(i) inner diameter of the plate

(ii) axial force to engage the clutch

Solution:

$P = 25$ kW $\quad \mu = 0.25$

$N = 900$ rpm $\quad R_o = 0.18$ m

$p_i = 85$ kN/m^2

Now, $P = T\omega$

$$25\,000 = T \times \frac{2\pi \times 900}{60}$$

$T = 265.26$ N.m

(i) $T = \dfrac{\mu F}{2}(R_o + R_i) \times n$ (n = number of surfaces)

$$= \frac{\mu}{2}[2\pi p_i R_i (R_o - R_i)](R_o + R_i) \times n$$

$$265.26 = 0.25 \times \pi \times 85\,000 \times R_i (0.18 - R_i)(0.18 + R_i) \times 2$$

$$R_i = [(0.18)^2 - R_i^2] = 0.001987$$

or $\quad 0.0324R_i - R_i^3 = 0.001987$

Solving the equation by trial and error method,

$R_i = 0.1315$ m or <u>131.5 mm</u>

(ii) $F = 2\pi p_i R_i (R_o - R_i) \times n$

$= 2\pi \times 85\,000 \times 0.1315\,(0.18 - 0.1315) \times 2$

$= 6812$ N or 6.812 kN

Example 8.18 *A friction clutch is used to rotate a machine from a shaft rotating at a uniform speed of 250 rpm. The disc-type clutch has both of its sides effective, the coefficient of friction being 0.3. The outer and the inner diameters of the friction plate are 200 mm and 120 mm respectively. Assuming uniform*

wear of the clutch, the intensity of pressure is not to be more than 100 kN/m². If the moment of inertia of the rotating parts of the machine is 6.5 kg.m², determine the time to attain the full speed by the machine and the energy lost in slipping of the clutch.

What will be the intensity of pressure if the condition of uniform pressure of the clutch is considered? Also, determine the ratio of power transmitted with uniform wear to that with uniform pressure.

Solution:

$p_i = 100 \times 10^3$ N/m² $\quad R_o = 0.1$ m

$I = 6.5$ kg.m² $\quad R_i = 0.06$ m

$\mu = 0.3 \quad N = 250$ rpm

$n = 2$ (both sides effective)

(a) *With uniform wear*

Force/surface, $F = 2\pi p_i R_i (R_o - R_i)$

$= 2\pi \times 100 \times 10^3 \times 0.06(0.1 - 0.06) = 1508$ N

$$T = \frac{\mu F}{2}(R_o + R_i) \times n$$

$$= \frac{0.3 \times 1508}{2}(0.1 + 0.06) \times 2$$

$= 72.38$ N.m

$$P = T \times \omega = 72.38 \times \frac{2\pi \times 250}{60} = 1895 \text{ W}$$

Also $T = I\alpha$ (α is angular acceleration)

$72.38 = 6.5 \times \alpha$

or $\alpha = 11.135$ rad/s²

or $\dfrac{\omega}{t} = 11.135$

or $\dfrac{2\pi \times 250}{60 \times t} = 11.135$

or $t = \underline{2.35 \text{ s}}$

Thus, the full speed is attained by the machine in 2.35 seconds.

(b) *During the slipping period*

Angle turned by the driving shaft,

$$\theta_1 = \omega t = \frac{2\pi N}{60} t = \frac{2\pi \times 250}{60} \times 2.35$$

$= 61.5$ rad

Angle turned by the driven shaft,

$$\theta_2 = \omega_o t + \frac{1}{2}\alpha t^2 \qquad (\omega_o = 0)$$

$$= 0 + \frac{1}{2} \times 11.135 \times (2.35)^2$$

$= 30.75$ rad

Energy lost in friction $= T(\theta_1 - \theta_2)$

$= 72.38 \times (61.5 - 30.75)$

$= 2226$ N.m or 2.226 kN.m

(c) *With uniform pressure*

$$P = \frac{F}{\pi(R_o^2 - R_i^2)} = \frac{1508}{\pi[(0.1)^2 - (0.06)^2]}$$

$= 75\,000$ N/m² or 75 kN/m²

$$T = \frac{2}{3}\mu F \left[\frac{R_o^3 - R_i^3}{R_o^2 - R_i^2}\right] \times n$$

$$= \frac{2}{3} \times 0.3 \times 1508 \left[\frac{(0.1)^3 - (0.06)^3}{(0.1)^2 - (0.06)^2}\right] \times 2$$

$= 73.89$ N.m

$$P = 73.89 \times \frac{2\pi \times 250}{60} = 1934 \text{ W}$$

$$\frac{\text{Power with uniform wear}}{\text{Power with uniform pressure}} = \frac{1895}{1934} = \underline{0.98}$$

Example 8.19 *A single-plate clutch used to drive a rotor from the motor shaft has the following data:*

Internal diameter of the plate	*= 200 mm*
External diameter of the plate	*= 240 mm*
Spring force pressing the plates	*= 600 N*
Mass of the rotor	*= 1200 kg*
Radius of gyration of the rotor	*= 200 mm*
Mass of motor armature and shaft	*= 750 kg*
Radius of gyration of motor and shaft	*= 220 mm*
Coefficient of friction	*= 0.32*

Both sides of the plate are effective. The driving motor is brought to a speed of 1260 rpm and then suddenly the current is switched off and the clutch is engaged. Determine the

(i) final speed of the rotor *and the motor and the time to attain this speed*

(ii) kinetic energy lost during slipping

(iii) slipping time, if a constant resisting torque of 64 N.m exists on the armature shaft

(iv) slipping time if instead of a resisting torque, a constant driving torque of 64 N.m exists on the armature shaft

Solution:

$$\omega = \frac{2\pi N}{60} = \frac{2\pi \times 1260}{60} = 132 \text{ rad/s}$$

Moment of inertia of motor, $I_m = 750 \times (0.22)^2$
$= 36.3 \text{ kg.m}^2$

Moment of inertia of rotor, $I_r = 1200 \times (0.2)^2$
$= 48 \text{ kg.m}^2$

Friction torque, $T = \frac{\mu F}{2}(R_o + R_i) \times n$

$$= \frac{0.32 \times 600}{2}(0.12 + 0.1) \times 2$$

$= 42.24$ N.m

(i) Final speed of motor = Final speed of rotor

or $\omega_m + \alpha_m t = \omega_r + \alpha_r t$

or $\omega_m - \frac{T}{I_m} t = \omega_r + \frac{T}{I_r} t$

or $132 - \frac{42.24}{36.3} t = 0 + \frac{42.24}{48} t$

or $2.0436\, t = 132$

$t = \underline{64.6 \text{ s}}$

Final speed $= \frac{42.24}{48} t = \frac{42.24}{48} \times 64.6$
$= 56.85$ rad/s

$= \frac{60}{2\pi} \times 56.85 = \underline{542.9 \text{ rpm}}$

(ii) Angle turned by the driving shaft,

$$\theta_1 = \omega t - \frac{1}{2}\alpha t^2$$

$$= 132 \times 64.6 - \frac{1}{2} \cdot \frac{42.24}{36.3} \times 64.6^2$$

$= 6099$ rad

Angle turned by the rotor, $\theta_2 = \omega t + \frac{1}{2}\alpha t^2$

$$= 0 + \frac{1}{2} \cdot \frac{42.24}{48} \times 64.6^2$$

$= 1836$ rad

Energy lost in friction $= T(\theta_1 - \theta_2) = 42.24 \times (6099 - 1836) = 180\,060$ N or $\underline{180.06 \text{ kN}}$

(iii) Total resisting torque on the armature
$= -42.24 - 64 = -106.24$ N.m

$$\therefore\ 132 - \frac{106.24}{36.3} t = 0 + \frac{42.24}{48} t$$

$3.8067\, t = 132$

$t = \underline{34.7 \text{ s}}$

(iv) Net resisting torque on the armature
$= -42.24 + 64 = 21.76$ N.m

i.e, it is accelerating torque.

$$\therefore\ 132 + \frac{21.76}{36.3} t = 0 + \frac{42.24}{48} t$$

$0.2806\, t = 132$

$t = \underline{470.5 \text{ s}}$

Example 8.20 *An engine is coupled to a rotating drum by a single disc friction clutch having both of its sides lined with friction material. Axial pressure on the disc is 1 kN. Inner and outer diameters of the disc are 280 mm and 360 mm respectively. The engine develops a constant torque of 36 N.m and the inertia of its rotating parts is equivalent to that of a flywheel of 30-kg mass and a radius of gyration of 280 mm. The mass and radius of gyration of the drum are 50 kg and 420 mm respectively and the torque to overcome the friction is 6 N.m. The clutch is engaged when the engine speed is 480 rpm and the drum is stationary. Assuming the coefficient of friction to be 0.3, determine the*

(i) duration of slipping

(ii) speed when the clutch slip ceases

(iii) total time taken for the drum to reach a speed of 480 rpm

Solution:

$F = 1000$ N/m^2 $\quad N = 480$ rpm

$R_o = 0.18$ m $\quad R_i = 0.14$ m

$\mu = 0.3$ $\quad n = 2$ (both sides effective)

$$\omega = \frac{2\pi N}{60} = \frac{2\pi \times 480}{60} = 16\pi \text{ rad/s}$$

Moment of inertia of engine, $I_e = 30 \times (0.28)^2$
$= 2.35 \text{ kg.m}^2$

Moment of inertia of drum, $I_d = 50 \times (0.42)^2$
$= 8.82 \text{ kg.m}^2$

Friction torque, $T = \frac{\mu F}{2}(R_o + R_i) \times n$

$$= \frac{0.3 \times 1000}{2}(0.18 + 0.14) \times 2$$

$= 96$ N.m

(i) Net resisting torque on the armature =

$$-96 + 36 = -60 \text{ N.m}$$

Net accelerating torque on the drum =

$$96 - 6 = 90 \text{ N.m}$$

Final speed of engine = Final speed of rotor

or $\omega_e + \alpha_e t = \omega_d + \alpha_d t$

or $\omega_e - \frac{T}{I_e} t = \omega_d + \frac{T}{I_d} t$

$\therefore$ $16\pi - \frac{60}{2.35} t = 0 + \frac{90}{8.82} t$

$35.714\, t = 16\pi$

$t = \underline{1.407 \text{ s}}$

(ii) The speed when the slip ceases =

$$\frac{90}{8.82} \times 1.407 = 14.357 \text{ rad/s}$$

or $\frac{60}{2\pi} \times 14.357 = \underline{137.1 \text{ rpm}}$.

(iii) After the slipping ceases,

Net accelerating torque on the engine and the drum = 36 – 6 = 30 N.m

Net moment of inertia of the engine and the drum = 2.35 + 8.82 = 11.17 kg.m^2

Now, final speed = initial speed + acceleration × time

$$16\pi = 14.357 + \frac{30}{11.17} t$$

$2.685\, t = 35.908$

$t = 13.37$ s

$\therefore$ total time taken = 1.41 + 13.37 = $\underline{14.78 \text{ s}}$

Example 8.21 *If the capacity of a single-plate clutch decreases by 13 % during the initial wear period, determine the minimum value of the ratio of internal diameter to external diameter for the same axial load. Consider both the sides of the clutch plate to be effective.*

Solution: A new clutch has a uniform pressure distribution, but after the initial wear the clutch exhibits the characteristics of uniform wear. Capacity of a clutch means the maximum torque transmitted. Thus, according to the given condition,

$$T_{\text{wear}} = 0.87\, T_{\text{pressure}}$$

$$\frac{\mu F}{2}(R_o + R_i) \times n = 0.87 \times \frac{2}{3}\mu F \left[\frac{R_o^3 - R_i^3}{R_o^2 - R_i^2}\right] \times n$$

or $(R_o + R_i) = 1.16 \left[\frac{R_o^3 - R_i^3}{R_o^2 - R_i^2}\right]$

$(R_o + R_i)(R_o^2 - R_i^2) = 1.16\ (R_o^3 - R_i^3)$

$(R_o + R_i)\ (R_o + R_i)\ (R_o - R_i)$

$= 1.16\ (R_o - R_i)\ (R_o^2 + R_o R_i + R_i^2)$

$(R_o + R_i)^2 = 1.16\ (R_o^2 + R_o R_i + R_i^2)$

$(R_o^2 + 2R_o R_i + R_i^2) = 1.16\ (R_o^2 + R_o R_i + R_i^2)$

$0.16\, R_o^2 + 0.16 R_i^2 - 0.84\, R_o R_i = 0$

Dividing throughout by $0.16\ R_o^2$,

$$1 + \left(\frac{R_i}{R_o}\right)^2 - 5.25\left(\frac{R_i}{R_o}\right) = 0$$

or $\left(\frac{R_i}{R_o}\right)^2 - 5.25\left(\frac{R_i}{R_o}\right) + 1 = 0$

Taking $\frac{R_i}{R_o} = r$

$r^2 - 5.25\, r + 1 = 0$

or $r = \frac{5.25 \pm \sqrt{5.25^2 - 4}}{2}$

$= \frac{5.25 \pm 4.854}{2}$

Positive value is not possible as ratio r cannot be more than 1.

$\therefore$ $r = \frac{5.25 - 4.854}{2} = 0.198$

or $\frac{R_i}{R_o} = \underline{0.198}$

Example 8.22 *A multi-plate disc clutch transmits 55 kW of power at 1800 rpm. Coefficient of friction for the friction surfaces is 0.1. Axial intensity of pressure is not to exceed 160 kN/m². The internal radius is 80 mm and is 0.7 times the external radius. Find the number of plates needed to transmit the required torque.*

Solution:

$p_i = 160 \times 10^3$ N/m² $\quad R_i = 0.08$ m

$\mu = 0.1 \quad R_o = \dfrac{0.08}{0.7} = 0.1143$ m

$N = 1800$ rpm

$P = 55$ kW

Assuming uniform wear conditions,

$$F = 2\pi p_i r_i (R_o - R_i)$$
$$= 2\pi \times 160 \times 10^3 \times 0.08\,(0.1143 - 0.08)$$
$$= 2759 \text{ N}$$

$$T = \frac{1}{2}\mu F (R_o + R_i)$$
$$= \frac{1}{2} \times 0.1 \times 2759 \times (0.1143 + 0.08)$$
$$= 26.78 \text{ N.m/surface}$$

Total torque transmitted

$$= \frac{P}{\omega} = \frac{55000}{\dfrac{2\pi \times 1800}{60}} = 291.8 \text{ N.m}$$

Number of friction surfaces required $= \dfrac{291.8}{26.78}$

$= 10.9$ or 11 surfaces

In all, there will be 12 plates. 6 plates (rings) revolve with the driving or engine shaft and the other 6 with the driven shaft.

Example 8.23 *A multi-plate disc clutch transmits 30 kW of power at 1800 rpm. It has four discs on the driving shaft and three discs on the driven shaft providing six pairs of contact surfaces. The external and internal diameters of the contact surfaces are 200 mm and 100 mm respectively. Assuming the clutch to be new, find the total spring load pressing the plates together. Coefficient of friction is 0.3.*

Also, determine the maximum power transmitted when the contact surfaces have worn away by 0.4 mm. There are 8 springs and the stiffness of each spring is 15 kN/m.

Solution

$$\omega = \frac{2\pi \times 1800}{60} = 60\pi \text{ rad/s}$$

A new clutch has a uniform pressure distribution, but after the initial wear the clutch exhibits the characteristics of uniform wear.

$P = T\omega$ or $30\,000 = T \times 60\pi$ or $T = 159.15$ N.m

Thus, torque transmitted by new clutch

$$= \frac{2}{3}\mu F \left[\frac{R_o^3 - R_i^3}{R_o^2 - R_i^2}\right] \times n$$

or $\quad 159.15 = \dfrac{2}{3} \times 0.3F \left[\dfrac{100^3 - 50^3}{100^2 - 50^2}\right] \times 6$

or $\quad F = 1137$ N

When the surfaces are worn out

Contact surfaces = number of pairs of contact × 2 = 6 × 2 =12

Total wear = number of surfaces × wear of each surface = 12 × 0.4 = 4.8 mm

Stiffness of each spring = 15 kN/m = 15 N/mm

Total stiffness of springs = stiffness × number of springs = 15 × 8 = 120 N/mm

∴ reduction in spring force = 120 × 4.8 = 576 N

New axial load = 1137 – 576 = 561 N

$$T = \frac{1}{2}\mu F (R_o + R_i).n = \frac{1}{2} \times 0.3 \times 561 \times$$
$$(100 + 50) \times 6 = 75\,735 \text{ N.mm} = 75.735 \text{ N.m}$$

Maximum power transmitted $= 75.735 \times 60\pi$

$= 14\,276$ W $= 14.276$ kW

Example 8.24 *A torque of 350 N.m is transmitted through a cone clutch having a mean diameter of 300 mm and a semi-cone angle of 15°. The maximum normal pressure at the mean radius is 150 kN/m². The coefficient of friction is 0.3.*

Calculate the width of the contact surface. Also, find the axial force to engage the clutch.

Solution:

$T = 350$ N.m $\quad R_m = 0.15$ m

$P_m = 150$ kN/m^2 $\quad \mu = 0.3$

$\alpha = 15°$

$$T = \mu F_n R_m$$
$$350 = 0.3 \times F_n \times 0.15$$
$$F_n = 7\,778 \text{ N}$$

and

$$F_n = 2\pi p_m R_m b$$
$$7\,778 = 2\pi \times 150 \times 10^3 \times 0.15 \times b$$
$$b = 0.055 \text{ m or } \underline{55 \text{ mm}}$$

Axial force, $F = F_n \sin\alpha = 7\,778 \sin 15°$

$= \underline{2012.4 \text{ N}}$

Example 8.25 *The semi-cone angle of a cone clutch is 12.5° and the contact surfaces have a mean diameter of 80 mm. Coefficient of friction is 0.32. What is the minimum torque required to produce slipping of the clutch for an axial force of 200 N?*

If the clutch is used to connect an electric motor with a stationary flywheel, determine the time needed to attain the full speed and the energy lost during slipping. Motor speed is 900 rpm and the moment of inertia of the flywheel is 0.4 kg.m^2.

Solution:

$R_m = 0.04$ m $\quad \mu = 0.32$

$F = 200$ N $\quad \alpha = 12.5°$

$N = 900$ rpm $\quad I = 0.4$ kg.m^2

$T = I\,\alpha_a$ $\quad$ (α_a = angular acceleration)

or $\quad \mu \dfrac{F}{\sin\alpha} R_m = I.\alpha_a$

or $\quad 0.32 \times \dfrac{200}{\sin 12.5°} \times 0.04 = 0.4\alpha_a$

$$\alpha_a = 29.57 \text{ rad/s}^2$$

and $\quad T = 0.4 \times 29.57$

$= 11.828$ N.m

or $\quad \dfrac{\omega}{t} = 29.57$

or $\quad \dfrac{2\pi \times 900}{60t} = 29.57$

$$t = \underline{3.187 \text{ s}}$$

During slipping period

Angle turned by driving shaft,

$$\theta_1 = \omega t = \frac{2\pi \times 900}{60} \times 3.187 = 300.4 \text{ rad}$$

Angle turned by driven shaft, $\theta_2 = \omega_o t + \dfrac{1}{2}\alpha_a t^2$

$$= 0 + \frac{1}{2} \times 29.57 \times (3.187)^2 = 150.2 \text{ rad}$$

Energy lost in friction $= T(\theta_1 - \theta_2)$

$= 11.828\,(300.4 - 150.2) = \underline{1776.5 \text{ N.m}}$

Alternatively,

energy supplied $= T\omega \times$ time

$$= 11.828 \times \frac{2\pi \times 900}{60} \times 3.187 = 3553 \text{ N.m}$$

Energy of flywheel

$$= \frac{1}{2} I\omega^2 = \frac{1}{2} \times 0.4 \times \left(\frac{2\pi \times 900}{60}\right)^2 = 1776.5 \text{ N.m}$$

Energy lost $= 3553 - 1776.5 = 1776.5$ N.m

Example 8.26 *A cone clutch with a semi-cone angle of 15° transmits 10 kW at 600 rpm. The normal pressure intensity between the surfaces in contact is not to exceed 100 kN/m^2. The width of the friction surfaces is half of the mean diameter. Assume $\mu = 0.25$. Determine the*

(i) outer and inner diameters of the plate

(ii) width of the cone face

(iii) axial force to engage the clutch.

Solution:

$P = 10$ kW $\quad p = 100$ kN/m^2

$N = 600$ rpm $\quad \mu = 0.25$

$\alpha = 15°$ $\quad b = \dfrac{d_m}{2} = R_m$

(i) $b = R_m$

or

$$\frac{R_o - R_i}{\sin\alpha} = \frac{R_o + R_i}{2} \qquad \text{[refer Fig. 8.16]}$$

or

$$R_o - R_i = \frac{\sin 15°}{2}(R_o + R_i)$$
$$= 0.129R_o + 0.129R_i$$

or $R_o = 1.296\, R_i$

Now,

$$P = T.\,\omega$$

$$10\,000 = T.\,\frac{2\pi \times 600}{60}$$

$$T = 159 \text{ N.m}$$

Intensity of pressure is maximum at the inner radius (uniform wear theory).

$$T = \frac{\mu F_n}{2}(R_o + R_i)$$

$$= \frac{\mu F}{2\sin\alpha}(R_o + R_i)$$

$$= \frac{\mu}{2\sin\alpha}[2\pi p_i R_i (R_o - R_i)](R_o + R_i)$$

$$= \frac{\mu\pi p_i}{\sin\alpha} R_i (R_o^2 - R_i^2)$$

$$159 = \frac{0.25\pi \times 100 \times 10^3}{\sin 15°} R_i[(1.296R_i)^2 - R_i^2]$$

$$= \frac{0.25\pi \times 100 \times 10^3}{\sin 15°} \times 0.6796 R_i^3$$

$R_i = 0.0917$ m or $\underline{91.7\text{mm}}$

$R_o = 91.7 \times 1.296 = \underline{118.8 \text{ mm}}$

(ii) $b = \dfrac{R_o - R_i}{\sin\alpha} = \dfrac{118.8 - 91.7}{\sin 15°} = \underline{105 \text{ mm}}$

(iii) Axial force, $F = 2\,\pi p_i R_i\,(R_o - R_i)$

$= 2\pi \times 100 \times 10^3 \times 0.0917\,(0.1188 - 0.0917)$

$= \underline{1561 \text{ N}}$

Example 8.27 *A centrifugal clutch transmits 20 kW of power at 750 rpm. The engagement of the clutch commences at 70 per cent of the running speed. The inside diameter of the drum is 200 mm and the distance of the centre of mass of each shoe is 40 mm from the contact surface. Determine the*

(i) mass of each shoe

(ii) net force exerted by each shoe on the drum surface

(iii) power transmitted when the shoe is worn 2 mm and is not readjusted

Assume μ to be 0.25 and stiffness of the spring 150 kN/m.

Solution:

$P = 20$ kW $\quad R = 0.2$ m

$N = 750$ rpm $\quad r = 0.2 - 0.04 = 0.16$ mm

$\mu = 0.25$

(i) $\omega = \dfrac{2\pi \times 750}{60} = 78.5$ rad/s

$\omega' = 0.7 \times 78.5 = 55$ rad/s

$P = T\,\omega$

$20\,000 = T \times 78.5$

T = 254.8 N.m

Total frictional torque acting

$= \mu\, mr\,(\omega^2 - \omega'^2).R.n$

$254.8 = 0.25 \times m \times 0.16(78.5^2 - 55^2) \times 0.2 \times 4$

$= 100.4 \times m$

$m = \underline{2.538 \text{ kg}}$

(ii) Net force exerted by each shoe on the drum surface

$= mr(\omega^2 - \omega'^2)$

$= 2.538 \times 0.16\,(78.5^2 - 55^2)$

$= \underline{1274 \text{ N}}$

(iii) Spring force exerted by each spring

$= 2.538 \times 0.16 \times 55^2 = 1228.4$ N

When the shoe wears 2 mm, each shoe has to move forward by 2 mm. This increases the distance of the centre of mass of the shoe from 160 mm to 162 mm. Also, the spring force is increased due to its additional displacement of 2 mm.

Additional spring force = Stiffness × Displacement

$= 150 \times 10^3 \times 0.002$

$= 300$ N

Total spring force $= 1228.4 + 300 = 1528.4$ N

Net force exerted by each shoe on the drum surface

$= mr\omega^2 - 1528.4$

$= 2.538 \times 0.162 \times 78.5^2 - 1528.4$

$= \underline{1005.2 \text{ N}}$

Total frictional torque acting $= \mu F.R.n$

$T = 0.25 \times 1005.2 \times 0.2 \times 4$

$= 201.04$ N.m

$P = T.\,\omega$

$= 201.04 \times 78.5$

$= 15\,782$ W or $\underline{15.782 \text{ kW}}$

8.10 ROLLING FRICTION

When a ball rolls over a flat surface, the contact is theoretically at a point. Similarly, when a cylinder rolls over the surface, the contact is along a line parallel to the axis. However, the ball or the cylinder possesses weight and due to the pressure of the same, deformation of the flat surface or of the rolling body or of both takes place. The amount of deformation will depend upon the elasticity of the materials in contact and the pressure. With harder surfaces, the deformation is extremely small. The deformation causes the two surfaces to have area of contact rather than point or line contact.

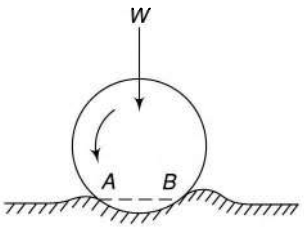

Fig. 8.18

Figure 8.18 shows a ball rolling on a flat surface. The ball is assumed to be made of a very hard material so that its deformation is negligible. The material of the dented surface is stretched at the place of contact as the curved length *AB* is greater than the flat length *AB*.

Now, if the ball is to roll to the right, the material of the flat surface must be stretched to accommodate the curved surface of the ball. The stretching material slides against the surface of the ball which causes frictional resistance. The frictional resistance also occurs when the material left behind again contracts and slides against the surface of the ball. This friction is known as *rolling friction*.

8.11 ANTI-FRICTION BEARINGS

Ordinarily, if a shaft revolves in a bearing, it has a sliding motion. But if balls or rollers are used between the shaft and the journal as shown in Figs 8.19 and 8.20 then rolling occurs between the journal and the rollers as well as between the rollers and the shaft. Usually, the balls or rollers are made of hardened materials such as chromium steel or chrome–nickel steel.

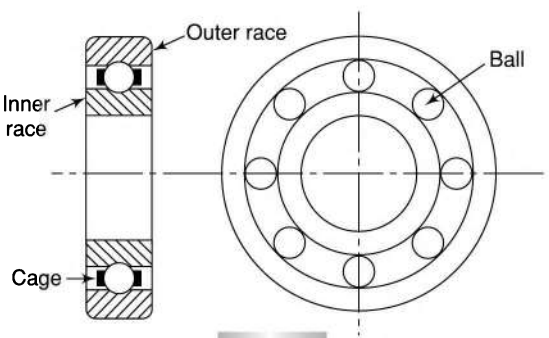

Fig. 8.19

1. Ball Bearings

A ball bearing consists of a number of hardened balls mounted between two hardened races. The inner race is fitted to the shaft and the outer race is a tight fit into the bearing housing. Thus, there is no relative movement between the shaft and the inner race, and the outer race and the housing. There are shallow grooves in the races having a slight larger radius than that of the balls to accommodate the balls. A light brass cage keeps the balls at a fixed distance from one another (Fig. 8.19).

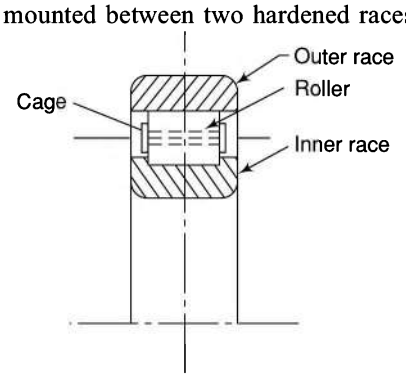

Fig. 8.20

Since the balls as well as the races are very hard, distortion of each is little and the rolling friction is very low.

The friction of ball bearings is slightly higher when lubricated than when dry. However, a small amount of lubricant is useful to prevent rust formation.

2. Roller Bearings

These are similar to ball bearings where the balls are replaced by hardened cylindrical rollers. These bearings can carry heavier loads.

Figure 8.20 shows a radial roller bearing. This type of bearing will carry only the radial loads or loads perpendicular to the shaft axis. The outer race is plain whereas the inner race has a groove to accommodate the rollers. A cage keeps the rollers at a uniform distance apart.

When the rollers are small and used without a cage, they are known as *needles*. Such bearings are used to carry heavy loads.

Roller bearings are not used for misaligned shafts.

8.12 GREASY FRICTION

If two metallic surfaces are wetted with a small amount of lubricant, a very thin film of the same is formed on each of the surfaces. This thin film is of molecular thickness. It adheres to the surface and is known as *adsorbed film*. It has been found that when the two surfaces are placed in contact, the coefficient of friction between them is considerably reduced compared with when the surfaces are dry and unlubricated.

The property of a lubricant to form a layer of molecular thickness (adsorbed film) on a metallic surface is known as its *oiliness*. If two lubricants of equal viscosity are used to lubricate two metallic surfaces under identical conditions, it is found that one reduces the friction more than the other and is said to have greater oiliness.

The friction of two surfaces, when they are wetted with an extreme thin layer of lubricant and metal-to-metal contact can take place between high spots, is known as *greasy friction* or *boundary friction*.

The laws governing greasy friction are similar to those for solid or dry friction.

8.13 GREASY FRICTION AT A JOURNAL

Greasy or boundary friction occurs in heavily loaded, slow-running bearings. In this type of friction, the frictional force is assumed to be proportional to the normal reaction.

When a shaft rests in the bearing [Fig. 8.21(a)], its weight **W** acts through its centre of gravity. The reaction of the bearing acts in line with **W** in the vertically upward direction. The shaft rests at the bottom of the bearing at A and metal to metal contact exists between the two.

When a torque is applied to the shaft, it rotates and the seat of pressure creeps or climbs up the bearing in a direction opposite to that of rotation. Metal-to-metal condition still exists and greasy friction criterion applies as the oil film will be of molecular thickness. The common normal at B between the two surfaces in contact passes through the centre of the shaft.

Let $\mathbf{R}_n$ = normal (radial) reaction at B

$\mu\mathbf{R}_n$ = friction force, tangential to the shaft

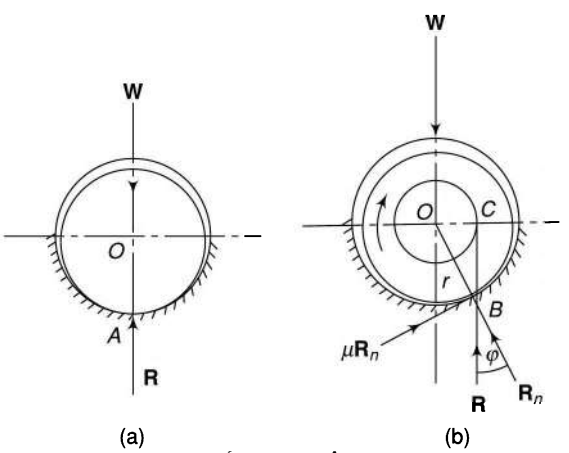

Fig. 8.21

The normal reaction and the friction force can be combined into a resultant reaction **R** inclined at an angle φ to $\mathbf{R}_n$ [Fig. 8.21(b)].

Now the shaft is in equilibrium under the following forces:

(i) weight **W**, acting vertically downwards, and

(ii) reaction **R.**

For equilibrium, **R** must act vertically upwards and must be equal to **W**. However, the two forces **W** and **R** will be parallel and constitute a couple.

Let OC = Perpendicular to R from O

Friction couple (torque) $= W \times OC = Wr \sin \varphi$ $\quad \left(\because \sin \varphi = \dfrac{OC}{r}\right)$

$\approx Wr \tan \varphi$ (as φ is small)

$\approx Wr\, \mu$ ($\mu = \tan \varphi$)

This couple must be equal and opposite to the couple or torque producing motion.

A circle drawn with OC (or $r \sin\varphi \approx r \tan \varphi \approx r\mu$) as radius is known as the *friction circle* of the journal.

Thus, the effect of friction is equivalent to displacing the reaction through a distance equal to $r \sin \varphi$ or such that it is tangential to the friction circle.

8.14 FRICTION AXIS OF A LINK

In a pin-jointed mechanism, usually, it is assumed that the resulting thrusts (axial forces) in links act along the longitudinal axes of the links. But as the laws of dry friction are similar to those of greasy friction, the friction at pin-joint acts in the same way as that for a journal (rotating shaft) revolving in a bearing. In a journal bearing, the resultant force on a journal is tangential to the friction circle. Similarly, in pin-jointed links, the line of thrust on a link is tangential to the friction circles at the pin-joints. The net effect of all this is to shift the axis along which the thrust acts. The new axis is knows as the *friction axis* of the link.

1. Slider-crank Mechanism

Figure 8.22(a) shows a slider-crank mechanism in which **F** is the thrust on the slider. If the effect of friction is neglected, the force **F** will induce a thrust $\mathbf{F}_c$ in the connecting rod along its axis. However, due to friction, the friction axis will be along a tangent to the friction circles at the joints A and B.

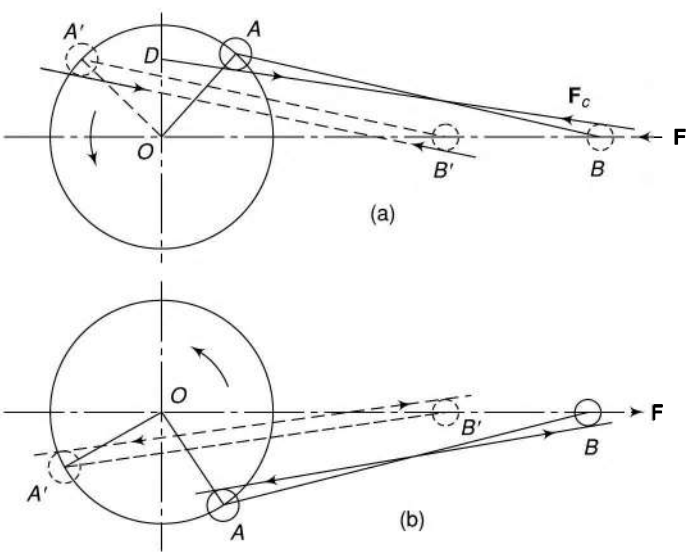

Let r_a = radius of pin at A

r_b = radius of pin at B

μ_a = coefficient of friction at A

μ_b = coefficient of friction at B

Therefore, the radius of friction circle at $A = \mu_a r_a$

The radius of friction circle at $B = \mu_b r_b$

(exactly the two radii will be $r_a \sin \varphi_a$ and $r_b \sin \varphi_b$)

Now, there are four possible ways of drawing a tangent to these circles. To decide about the right one, remember that a friction couple is opposite to the couple or torque producing the motion of a link. Thus, while drawing a tangent to a friction circle, see that the friction couple or torque so obtained is opposite to the direction of rotation of the link. Thus, the position of right tangent depends upon the

1. directions of the external forces on the link, and
2. direction of the motion of the link relative to the link to which it is connected.

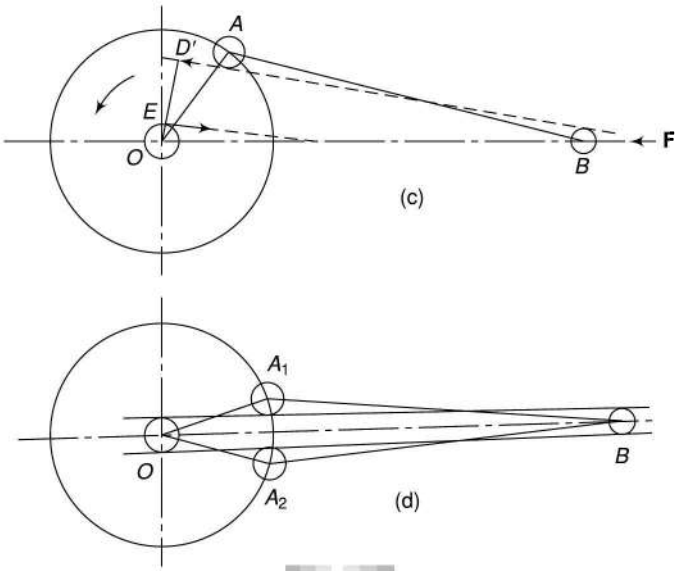

Fig. 8.22

Owing to the force **F** on the piston, compressive forces are developed in the connecting rod and the crank rotates in the counter-clockwise direction. At the end *B*, the angle *OBA* is increasing and Thus, the rod rotates clockwise relative to the piston. Therefore, the tangent at *B* must be on the upper side of the friction circle to give a counter-clockwise friction couple. At the end *A*, the angle *OAB* is decreasing and thus, the rod rotates clockwise relative to the crank. Therefore, the tangent at *A* must be on the lower side of the friction circle to give a counter-clockwise friction couple. The friction axis will be the common tangent to the two friction circles, on the upper side of the circle at *B* and on the lower side of the circle at *A*.

Figure 8.22(a) also shows one more position of the crank in the dotted lines. The direction of **F** as well as that of the thrust in the connecting rod is the same as before. However, now the angle $OB'A'$ at B' is decreasing. thus, the rod rotates in the counter-clockwise direction relative to the piston and the tangent is on the lower side of the friction circle to give a clockwise friction couple. The tangent at end A' will be as before.

For the positions of the crank shown in Fig. 8.22(b), the direction of **F** has changed and the rod becomes in tension. The angle $OB'A'$ at B' increases and thus, the rod rotates in the counter clockwise direction. The tangent, therefore, is on the upper side of the circle. At A', the angle $OA'B'$ also increases and the rod rotates clockwise relative to the crank. The tangent is on the upper side of the circle to give a counter-clockwise friction couple. In the same way, the tangent can be drawn for the position *OA* of the crank.

In case a torque **T** turns the crank counter-clockwise and a load **F** is applied to the piston, then the rod will be in tension instead of compression for the positions of Fig. 8.22(a). For the first position of the crank, the tangent at *A* will be on the upper side and at *B* on the lower side.

Another method to know the friction axis out of the four possible tangents is to select the one that gives the least intercept from *O* on a vertical through *O* such as *OD* if **F** is the driving force. In case **T** is the driving torque at the crank, the intercept would be maximum.

Reaction at Crankshaft Bearing (Fig. 8.22c). The crank *OA* is acted upon by two equal and opposite forces at its two ends *O* and *A* forming a couple and a torque. A force equal and opposite to that in the connecting rod acts at the crank end *A*, the opposite of which acts at end *O*. As the crankshaft rotates in the counter-clockwise direction, the tangent is on the upper side of the friction circle to give a clockwise friction couple at end *O*.

The turning moment of the crankshaft = $F_c \times D'E$
where $D'E$ is drawn perpendicular to the friction axis.

Dead-angle and Dead-centre Positions During rotation, when the crank is near the inner dead centre, a position is obtained where the reaction at the crankshaft bearing and the friction axis of the connecting rod become in the same straight line [Fig. 8.22(d)]. These positions of the crank have been shown as OA_1 and OA_2 and are known as *dead-centre positions*. In these positions, the length $D'E$ is zero and, therefore, the turning moment or the torque transmitted is zero.

The angle A_1OA_2 is known as the *dead angle*. A corresponding dead angle at the outer dead-centre position of the crank can also be found in the same way.

2. Four-bar Mechanism

Consider a four-bar mechanism shown in Fig. 8.23. Let the rotation of the driving link AB be clockwise. In the absence of friction, the driving torque induces compressive axial force in the coupler along its axis BC. When friction is considered, it is tangential to the friction circles at B and C.

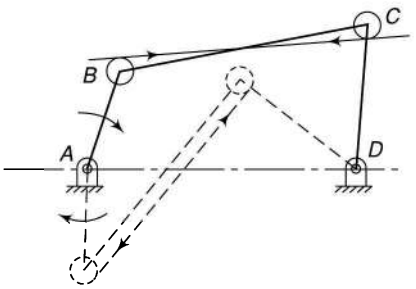

Fig. 8.23

The angle ABC at B is increasing. Thus, the coupler rotates in the counter-clockwise direction relative to AB. Therefore, the tangent at B is on the upper side of the circle to give a clockwise friction couple. Similarly at C, the angle BCD is decreasing. Thus, BC rotates in the counter-clockwise direction relative to CD. The tangent at C will be on the lower side of the circle so that the resulting friction couple is clockwise. Similarly, the friction axis for the links AB and DC can be drawn.

Example 8.28 *The length of crank of a slider-crank mechanism is 300 mm and of the connecting rod is 1.25 m. The diameters of the journals at the crosshead, crankpin and the crankshaft are 80 mm, 120 mm and 140 mm respectively. The steam pressure on the piston is 450 kN/m² which has a diameter of 250 mm. Coefficient of friction between the crosshead and the guides is 0.07 and for journals, it is 0.05.*

Find the reduction in the turning moment available at the crankshaft due to friction of the crosshead guides and the journals when the crank has rotated 50° from the inner-dead centre.

Solution: Refer to Fig. 8.24(a).

$AB = 1.25$ m $\qquad \theta = 50°$

$OA = 0.3$ m $\qquad p = 450$ kN/m²

$d = 250$ mm

Neglecting Friction

$$T = F_c \times OC = F_c \times OA \sin(\theta + \beta)$$

Piston at B is in equilibrium under the forces, **F**, $\mathbf{F}_c$ and **R** (reaction of guides).

$$\therefore F_c \cos\beta = F \quad \text{or} \quad F_c = \frac{F}{\cos\beta} = \frac{\frac{\pi}{4}d^2 \times p}{\cos\beta}$$

$$\text{Thus } T = \left(\frac{\pi}{4}d^2 p\right) \times OA \frac{\sin(\theta+\beta)}{\cos\beta}$$

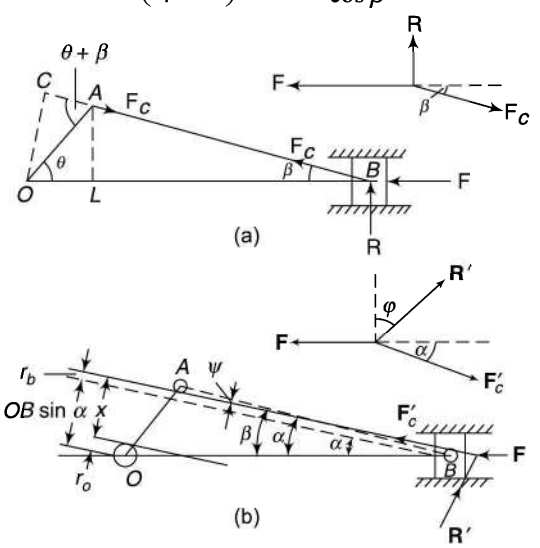

Fig. 8.24

β is given by

$$\beta = \sin^{-}\left(\frac{AL}{AB}\right) = \sin^{-}\left(\frac{OA\sin\theta}{AB}\right)$$

$$= \sin^{-}\left(\frac{0.3\sin 50^{\circ}}{1.25}\right)$$

$$= \sin^{-}(0.1839) = 10.6^{\circ}$$

$$T = \left[\frac{\pi}{4}(0.25)^2 \times 450 \times 10^3\right] \times 0.3 \times \frac{\sin(50^{\circ} + 10.6^{\circ})}{\cos 10.6^{\circ}}$$

$$= 22089 \times 0.3 \times \frac{\sin 60.6^{\circ}}{\cos 10.6^{\circ}} = 5873.5 \text{ N.m}$$

Friction Considered Refer to Fig. 8.24(b).

Radius of friction circle at O (crankshaft),

$$r_o = \mu r = 0.05 \times \frac{0.14}{2} = 0.0035 \text{ m}$$

Radius of friction circle at A (crankpin),

$$r_a = 0.05 \times \frac{0.12}{2} = 0.003 \text{ m}$$

Radius of friction circle at B (crosshead),

$$r_b = 0.05 \times \frac{0.08}{2} = 0.002 \text{ m}$$

$OB = OA \cos\theta + AB \cos\beta$

$= 0.3 \cos 50° + 1.25 \cos 10.6° = 1.4215$ m

Inclination of the friction axis with OB,

$$\alpha = \beta - \psi = \beta - \sin^{-}\left(\frac{r_a + r_b}{AB}\right)$$

$$= 10.6^{\circ} - \sin^{-}\left(\frac{0.003 + 0.002}{1.25}\right)$$

$$= 10.6° - 0.23°$$

$$= 10.37°$$

The piston at B is in equilibrium under the action of forces **F**, $\mathbf{F'_c}$ and **R′**.

$$\varphi = \tan^{-1} 0.07 = 4^{\circ}$$

$$\frac{F'_c}{\sin(90^{\circ} + \varphi)} = \frac{F}{\sin(90^{\circ} + \alpha - \varphi)}$$

or $$F'_c = \frac{22\,089 \sin(90^{\circ} + 4^{\circ})}{\sin(90^{\circ} + 10.37^{\circ} - 4^{\circ})} = 22\,172 \text{ N}$$

$x = OB \sin\alpha + r_b - r_o$

$= 1.4215 \sin 10.37° + 0.002 - 0.0035$

$= 0.2544$ m

$T' = F'_c \times x = 22\,172 \times 0.2544 = 5640.6$ N.m

Reduction in the torque available $= T - T'$

$= 5\,873.5 - 5\,640.6 =$ <u>232.9 N.m</u>

8.15 FILM FRICTION

In case of boundary or greasy friction, a very thin layer of molecular dimensions covers the two surfaces. The friction between the two surfaces acts in the same way as for dry surfaces and the laws are similar except that the friction force is greatly reduced in magnitude.

The friction resistance of two metallic surfaces can be reduced still further if a film of sufficient thickness is introduced in between the two to separate them completely. Now, an extremely thin layer adheres to each of the surfaces and moves with that. Thus, the motion will be due to shearing of the layers of the lubricant rather than due to contact of metallic surfaces. As the sliding or shearing of fluids depends upon the viscosity of the fluid, the friction force will also be depending upon that.

If it is considered that out of the two surfaces, one is at rest then the film of lubricant in contact with the stationary surface will remain at rest and that in contact with the moving surface will move with it. The different layers between the two may be considered to be moving with a speed proportional to its distance from the surface at rest. Thus, the force of friction would be the force necessary to slide these adjacent layers over one another.

For a journal rotating in a bearing under the film lubrication conditions, the frictional resistance is found to be

(a) proportional to the area
(b) proportional to the viscosity of the lubricant
(c) proportional to the speed
(d) independent of the pressure
(e) independent of the materials of the journal and the bearing

The first experiments on film lubrication were carried by Beauchamp Tower in 1883. However, it was Osborne Reynolds who demonstrated that to maintain a film between two surfaces, it is necessary that they are slightly inclined to each other such that a wedge of lubricant is formed between them.

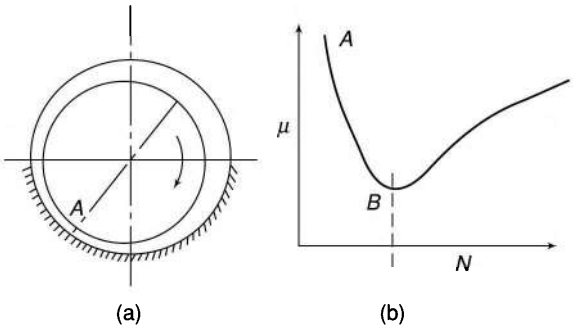

Fig. 8.25

Under greasy friction, in slow running and heavily loaded shafts, the seat of pressure climbs up the bearing in a direction opposite to that of rotation of the shaft and the condition is maintained. However, if the speed is further increased, a film of oil adheres to the surface of the journal which also rotates and becomes of sufficient thickness to lift the journal. The pressure of the oil beneath the journal also rises to support the load.

It is observed that under stable conditions, the journal takes up a new position as shown in Fig. 8.25(a). Two wedges of oil are formed on each side of A, the point of minimum thickness of oil. The point A is also referred as the *point of nearest approach*. The pressure of the oil in the wedge varies from zero at the point of entrance of the oil to a maximum at a point somewhere near A. On the down side of A, the pressure falls to zero before reaching the point of free discharge.

The pressure built up in the oil, due to decrease in area as it approaches the point A, is enough to bear the load of the bearing and separate the two metallic surfaces. The laws of viscous friction apply in this condition.

A plot of graph between the coefficient of friction and the speed [Fig. 8.25(b)] shows that at low speeds the coefficient of friction falls rapidly as the speed increases. This is because more oil is fed between the surfaces lowering the coefficient of friction. From A to B, the conditions vary from greasy friction at A to film friction at B where a complete oil film is framed. As the speed is further increased, the resistance of the oil film increases, increasing the coefficient of friction.

For clockwise rotation of the shaft, the position of its axis shifts towards right in the range of greasy friction and towards left in that of film friction [Figs 8.21(a) and 8.25(a)].

The above discussion may lead to the conclusion that it is possible to have no wear of the two metallic surfaces if film lubrication is adopted. However, in practice, some wear does take place even under the most favourable conditions. The most apparent cause is the failure of the oil film during the starting and stopping of the shaft, when the conditions resemble that of greasy friction, and metal-to-metal contact exists. Metal particles of extremely small size are produced through wear which then float in the lubricant. With time, the number of these particles increases which tends to cause further wear. Moreover, the small particles of solid matter tend to destroy the formation of the viscous oil film. Thus, in actual practice, the working conditions are of a combination of film and greasy lubrication. However, by fitting an oil filter to remove the small particles of solid matter may increase the life of a bearing. Otherwise, the abrasive action will increase the wear, increasing the clearances resulting in insufficient pressure rise to lift the bearing surfaces apart. Thus, the bearing may fail eventually.

8.16 MITCHELL THRUST BEARING

In the previous article, it has been stated that to maintain a film of lubricant between two surfaces, they should be slightly inclined to each other. In a journal bearing, this is achieved by allowing a slight difference

in diameters of the journal and the bearing. For flat surfaces, the same purpose is served if one surface has some degree of freedom so that it may become slightly inclined [Fig. 8.26(a)].

To bear axial forces (thrusts) in shafts, usually, a number of collars, working under dry friction conditions have to be used (Sec 8.7). In a Mitchell thrust bearing, the condition of film friction, instead of dry friction, is achieved and only one collar is used which considerably reduces the length of bearing by increasing the allowable pressure. Thus, this type of bearing is useful in transmitting very heavy thrusts, e.g., the thrust of a ship's propeller to the hull.

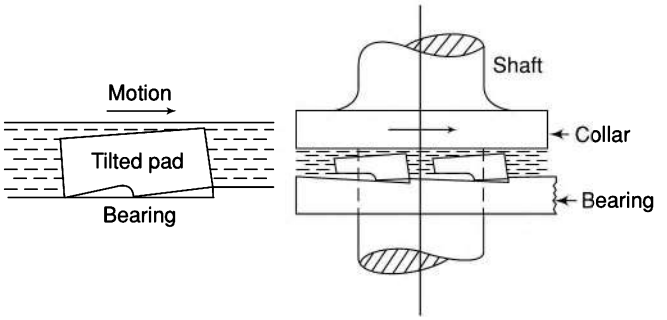

Fig. 8.26

A Mitchell thrust bearing consists of a series of metallic pads arranged around a rotating collar fixed to the shaft [Fig. 8.26(b)]. Each pad is held by the housing of the bearing. Thus, the pad is prevented from rotation but is able to tilt about its stepped edge. When the thrust is transmitted to the pads they can tilt slightly on the edges. The oil carried by the moving collar is dragged around the pad. Thus, an oil film of wedge shape is formed and a considerable pressure is built up to carry the axial load.

The number of pads can be from four to six depending upon the total thrust.

Summary

1. When a body slides over another, the motion is resisted by a force called the *force of friction*. The force arises from the fact that the surfaces, though planed and made smooth, have ridges and depressions that interlock and the relative movement is resisted.
2. In case of lathe slides, journal bearings, etc., where the power transmitted is reduced due to friction, the friction has to be decreased by the use of lubricated surfaces.
3. In processes, where the power is transmitted through friction, attempts are made to increase it to transmit more power. Examples are friction clutches, belt drives, tightening of a nut and bolt, etc.
4. Dry friction is said to occur when there is relative motion between two completely unlubricated surfaces. It is further divided into two types: *solid friction* and *rolling friction*.
5. When the two surfaces in contact have a minute thin layer of lubricant between them, it is known as *skin/ greasy/ boundary friction*.
6. When the two surfaces in contact are completely separated by a lubricant, friction occurs due to the shearing of different layers of the lubricant. This is known as *film friction* or *viscous* friction.
7. The force of solid friction is directly proportional to normal reaction between the two surfaces, opposes the motion, depends upon the materials of the two surfaces and is independent of the area of contact and the velocity of sliding.
8. The maximum value of the angle of inclination of a plane with the horizontal when the body starts sliding of its own is known as the *angle of repose* or *limiting angle of friction*.
9. When a body slides up the plane,
$$\eta = \frac{\cot(\alpha+\theta)-\cot\theta}{\cot\alpha-\cot\theta}$$
If the direction of the applied force is horizontal,
$$\eta = \frac{\tan\alpha}{\tan(\alpha+\varphi)}$$
10. When the body moves down the plane,
$$\eta = \frac{\cot\alpha-\cot\theta}{\cot(\varphi-\alpha)+\cot\theta}$$
If the direction of the applied force is horizontal,
$$\eta = \frac{\tan(\varphi-\alpha)}{\tan\alpha}$$

11. The reversal of the nut is avoided if the efficiency of the thread is less than 50%
12. A wedge is used to raise loads like a screw jack.
13. Efficiency of a wedge

$$= \frac{\cos\varphi' \tan\alpha}{\sin(\alpha + 2\varphi')} \times \frac{\cos(\alpha + \varphi + \varphi')}{\cos\varphi}$$

If $\varphi = \varphi'$, $\eta = \dfrac{\tan\alpha}{\tan(\alpha + 2\varphi)}$

14. A collar bearing or simply a collar is provided at any position along the shaft and bears the axial load on a mating surface.
15. When the axial load is taken by the end of the shaft which is inserted in a recess to bear the thrust, it is called a *pivot bearing* or simply a *pivot*. It is also known as *footstep bearing*.
16. In uniform pressure theory, pressure is assumed to be uniform over the surface area.
17. For uniform wear over an area, the intensity of pressure varies inversely proportional to the elementary areas and the product of the normal pressure and the corresponding radius is constant. Pressure intensity p at a radius r of the collar,

$$p = \frac{F}{2\pi r(R_o - R_i)}$$

18. For flat collars, friction torque is

$$T = \frac{2\mu F(R_o^3 - R_i^3)}{3(R_o^2 - R_i^2)} \quad \text{with uniform pressure theory}$$

$$= \frac{\mu F}{2}(R_o^2 + R_i^2) \quad \text{with uniform wear theory}$$

19. For conical collars, friction torque is increased by 1/sin α times from that for flat collars.
20. Expressions for torque in case of pivots can directly be obtained from the expressions for collars by inserting the values $R_i = 0$ and $R_o = R$.
21. To be on safer side, friction torque in clutches is calculated on the basis of uniform wear theory and in bearings on the basis of uniform pressure theory.
22. A clutch is a device used to transmit the rotary motion of one shaft to another when desired. The axes of the two shafts are coincident.
23. In a multi-plate clutch, the number of frictional linings and the metal plates is increased which increases the capacity of the clutch to transmit torque.
24. Ball and roller bearings are known as *anti-friction bearings*.
25. The property of a lubricant to form a layer of molecular thickness (adsorbed film) on a metallic surface is known as its *oiliness*.
26. Greasy or boundary friction occurs in heavily loaded, slow-running bearings.
27. A circle drawn with μr as radius is known as the *friction circle* of the journal.
28. Friction couple (torque) = $Wr\mu$
29. During rotation, the positions of the crank where the reaction at the crankshaft bearing and the friction axis of the connecting rod become aligned in the same straight line are known as *dead centre positions*.
30. For a journal rotating in a bearing under the film lubrication conditions, the frictional resistance is proportional to the area, the viscosity of the lubricant, the speed and is independent of the pressure and the materials of the journal and the bearing.

Exercises

1. What is friction? Is it a blessing or curse? Justify your answer giving examples.
2. What are various kinds of friction? Discuss each in brief.
3. What are the laws of solid dry friction?
4. Define the terms *coefficient of friction* and *limiting angle of friction*.
5. Deduce an expression for the efficiency of an inclined plane when a body moves
   (i) up a plane
   (ii) down a plane
6. Find expression for the screw efficiency of a square thread. Also, determine the condition for maximum efficiency.
7. Show that the reversal of the nut is avoided if the efficiency of square thread is less than 50% (approximately).
8. What is a wedge? Deduce an expression for its efficiency.
9. What are uniform pressure and uniform wear theories? Deduce expressions for the friction torque considering both the theories for a flat collar.
10. In what way are the expressions for the friction

torque of a conical collar changed from that for a flat collar? In what way are they modified for pivots.

11. Do you recommend the uniform pressure theory or uniform wear theory for the friction torque of a bearing? Explain.
12. What is a clutch? Make a sketch of a single-plate clutch and describe its working.
13. Explain the working of a multi-plate clutch with the help of a neat sketch.
14. Though cone clutches provide high frictional torque, yet they have become obsolete. Why?
15. Find a relation for the frictional torque acting on a centrifugal clutch.
16. Write a short note on anti-friction bearings.
17. Explain the terms *adsorbed film* and *oiliness* in case of greasy friction.
18. Explain the terms *friction circle, friction couple* and *friction axis.*
19. How is the correct tangent to the friction circle for correct friction axis of a slider-crank mechanism decided when the friction at the journals is considered?
20. What do you mean by film friction? State its laws.
21. Describe the working of a *Mitchell thrust bearing.*
22. A body on a rough horizontal surface requires a force of 240 N inclined at 25° just to pull it and 280 N just to push it at the same angle. Determine the weight of the body and the coefficient of friction.

    (1825 N, 0.126)
23. A force of 2.4 kN parallel to the plane surface is required to just move a body up an inclined plane, the angle of inclination being 8°. When the angle of inclination is increased to 12°, the force required increases to 3 kN. Determine the weight of the body and the coefficient of friction.

    (8.935 kW, 0.1307)
24. A power screw driven by an electric motor moves a nut in a horizontal plane when a force of 80 kN at a speed of 6 mm/s is applied. The screw is of single thread of 8-mm pitch and 48-mm major diameter. Determine the power of the motor if the coefficient of friction at the screw threads is 0.1.

    (1316.6 W)
25. Two wagons are coupled by using a turn buckle with right and left-hand single start threads. The mean diameter and the thread pitch are 48 mm and 10 mm respectively. The coefficient of friction between the screw and the nut is 0.14. Determine the work done in drawing the two wagons closer through a distance of 220 mm against a steady load of 3 kN. Also, find the additional work done if the load is increased to 8 kN over a distance of 300 mm.

    (1884 N.m, 3139.5 N.m)
26. A load of 12 kN is to be raised by means of a hand wheel with a threaded boss to act as a nut. The vertical screw is of single start square threads of 40-mm mean diameter and 10 mm pitch. The mean diameter of the bearing surface of the boss is 80 mm. The tangential force applied by each hand to the wheel is 120 N. If the coefficient of friction for the screw is 0.14 and for the bearing surface, it is 0.16, determine the suitable diameter of the hand wheel.

    (1.084 m)
27. A screw jack is used to raise a load of 5 tonnes (1 tonne = 9.81 kN). The pitch of single-start square threads used for the screw is 24 mm. The mean diameter is 72 mm. Determine the force to be applied at the end of 1.2 m long handle when the load is lifted with constant velocity and rotate with the spindle. Take $\mu = 0.2$. Also find the mechanical efficiency of the jack.

    (552.2 N; 33.9%)
28. Find the load that can be lifted by applying a force of 220 N at the end of a 500-mm long lever of screw jack using single-start square threads. The load does not rotate with the spindle and is carried on a swivel head having a bearing of 100 mm diameter. The pitch of the threads is 10 mm and the root diameter is 50 mm. Coefficient of friction between nut and thread is 0.18 and between spindle and swivel head is 0.15.

    Find also the efficiency of the jack.

    (7.8 kN; 11.29%)
29. Determine the mechanical efficiency of a wedge used to raise loads if the angle of wedge is 20° and the coefficient of friction is 0.2 between the frame and the wedge and 0.15 between the slider and the guide. The height of the guide is 120 mm and its lower end is 45 mm above the lower point of the axis of the slider which has a width of 50 mm. (38%)
30. The shaft of a collar thrust bearing rotates at 200 rpm and carries an end thrust of 10 tonnes. The outer and the inner diameters of the bearing are 480 mm and 280 mm respectively. If the power lost in friction is not to exceed 8 kW, determine the coefficient of friction of the lubricant of the bearing.

    (0.02)

31. A shaft carrying a load of 12 tonnes and running at 120 rpm has a number of collars integral with it. Shaft diameter is 240 mm and the external diameter of the collars is 360 mm. Intensity of uniform pressure is 400 kN/m² and the coefficient of friction is 0.06. Determine the power absorbed in overcoming the friction and the number of collars required.

(13.49 kW; 6)

32. A single-plate clutch, having two active surfaces, transmits 10 kW of power and the maximum torque developed is 120 N.m. Axial pressure is not to exceed 100 kN/m². Outer diameter of the friction plate is 1.3 times the inner diameter. Determine these diameters and the axial force exerted by the springs. Assume uniform wear and take coefficient of friction as 0.25.

(207 mm, 269mm)

33. The engine of an automobile is rated to give 80 kW at 1800 rpm with a maximum torque of 550 N.m. Design a dry single-plate clutch assuming the outer radius of the friction plate to be 1.2 times the inner radius. The coefficient of friction is 0.25 and the intensity of pressure between the plates is not to exceed 80 kN/m². Six springs are used to provide axial force necessary to engage the clutch and each spring has a stiffness of 50 N/mm. Find the initial compression in the springs and dimensions of the friction plate.

(15.49 mm)

34. A multiple disc clutch has 6 active friction surfaces. The power transmitted is 20 kW at 400 rpm. Inner and outer radii of the friction surfaces are 90 and 120 mm respectively. Assuming uniform wear with a coefficient of friction 0.3, find the maximum axial intensity of pressure between the discs.

(148.9 kN/m²)

35. Determine the axial force required to engage a cone clutch transmitting 25 kW of power at 750 rpm. Average friction diameter of the cone is 400 mm and average pressure intensity is 60 kN/m². Semi-cone angle is 10° and coefficient of friction 0.25. Also, find the width of the friction cone.

(2.672 kN; 84.4 mm)

36. Show that the torque transmitted by a cone clutch when intensity of pressure is uniform is given by

$$\frac{2\mu W}{3\sin\alpha}\left[\frac{r^3{}_o - r^3{}_i}{r^2{}_o - r^2{}_i}\right]$$

where W = axial load
μ = coefficient of friction of contact surfaces
α = semi-cone angle
r_o = outer radius of contact surface
r_i = inner radius of contact surface

In a cone clutch with semi-cone angle of 15°, maximum and minimum radii of the contact surface are 120 mm and 80 mm respectively. The speed is 800 rpm and the maximum allowable normal pressure is 150 kN/m². Determine the axial load and the power transmitted taking the coefficient of friction as 0.3.

(3.77 kN; 37.097 kW)

37. The crank of a steam engine is 250 mm long and the length of the connecting rod is 1 m. The steam pressure at the cross-head is 350 kN/m². The diameters of the journals at the crankshaft, crankpin and the crosshead are 180 mm, 140 mm and 100 mm respectively. The piston diameter is 200 mm and the coefficient of friction between the crosshead and guide is 0.079 and at the journal, it is 0.06. Determine the reduction in the turning moment available at the crankshaft due to friction of the crosshead guides and the journal at the moment when the crank has rotated through 45° from the inner-dead centre.

(58.7 Nm)

9 BELTS, ROPES AND CHAINS

Introduction

Usually, power is transmitted from one shaft to another by means of belts, ropes, chains and gears, the salient features of which are as follows:

1. Belts, ropes and chains are used where the distance between the shafts is large. For small distances, gears are preferred.
2. Belts, ropes and chains are flexible type of connectors, i.e., they are bent easily.
3. The flexibility of belts and ropes is due to the property of their materials whereas chains have a number of small rigid elements having relative motion between the two elements.
4. Belts and ropes transmit power due to friction between them and the pulleys. If the power transmitted exceeds the force of friction, the belt or rope slips over the pulley.
5. Belts and ropes are strained during motion as tensions are developed in them.
6. Owing to slipping and straining action, belts and ropes are not positive type of drives, i.e., their velocity ratios are not constant. On the other hand, chains and gears have constant velocity ratios.

This chapter deals with the power transmission by belts, ropes and chains. Power transmission by gears will be dealt in the next chapter. The belts used may be flat or of V shape. The selection of belt drive depends on the speeds of the velocity ratio, power to be transmitted, space available and the service conditions. A flat belt is used for light and moderate power transmission whereas for moderate to huge power transmission, more than one V belt or rope on pulleys with a number of grooves is used.

9.1 BELT AND ROPE DRIVES

To transmit power from one shaft to another, pulleys are mounted on the two shafts. The pulleys are then connected by an endless belt or rope passing over the pulleys. The connecting belt or rope is kept in tension so that motion of one pulley is transferred to the other without slip. The speed of the driven shaft can be varied by varying the diameters of the two pulleys.

For an unstreched belt mounted on the pulleys, the outer and the inner faces become engaged in tension and compression respectively (Fig. 9.1). In between there is a neutral section which has no tension or compression. Usually, this is considered at half the thickness of the belt. The

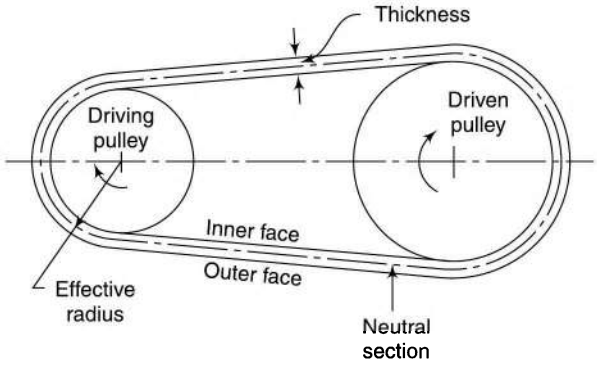

Fig. 9.1

effective radius of rotation of a pulley is obtained by adding half the belt thickness to the radius of the pulley.

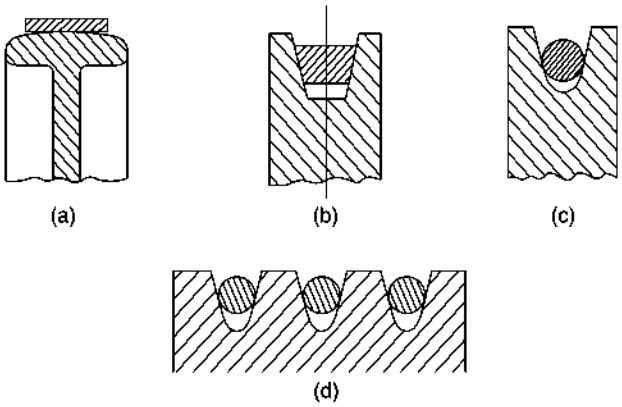

Fig. 9.2

Belt Drive A belt may be of rectangular section, known as a *flat belt* [Fig. 9.2(a)] or of trapezoidal section, known as a *V-belt* [Fig. 9.2(b)]. In case of a flat belt, the rim of the pulley is slightly *crowned* which helps to keep the belt running centrally on the pulley rim. The groove on the rim of the pulley of a V-belt drive is made deeper to take the advantage of the wedge action. The belt does not touch the bottom of the groove. Owing to wedging action, V-belts need little adjustment and transmit more power, without slip, as compared to flat belts. Also, a multiple V-belt system, using more than one belt in the two pulleys, can be used to increase the power transmitting capacity. Generally, these are more suitable for shorter centre distances.

Some advantages of V-belts are

- Positive drive as slip between belt and pulley is negligible
- No joint troubles as V-belts are made endless
- Operation is smooth and quite
- High velocity ratio up to 10 can be obtained
- Due to wedging action in the grooves, limiting ratio of tensions is higher and thus, more power transmission
- Multiple V-belt drive increases the power transmission manifold
- May be operated in either direction with tight side at the top or bottom
- Can be easily installed and removed.

Disadvantages of V-belts are

- Cannot be used for large centre distances
- Construction of pulleys is not simple
- Not as durable as flat belts
- Costlier as compared to flat belts.

Rope Drive For power transmission by ropes, grooved pulleys are used [Fig. 9.2(c)]. The rope is gripped on its sides as it bends down in the groove reducing the chances of slipping. Pulleys with several grooves can also be employed to increase the capacity of power transmission [Fig. 9.2(d)]. These may be connected in either of the two ways:

1. Using a continuous rope passing from one pulley to the other and back again to the same pulley in the next groove, and so on.
2. Using one rope for each pair of grooves.

The advantage of using continuous rope is that the tension in it is uniformly distributed. However, in case of belt failure, the whole drive is put out of action. Using one rope for each groove poses difficulty in tightening the ropes to the same extent but with the advantage that the system can continue its operation even if a rope fails. The repair can be undertaken when it is convenient.

Rope drives are, usually, preferred for long centre distances between the shafts, ropes being cheaper as compared to belts. These days, however, long distances are avoided and thus, the use of ropes has been limited.

9.2 OPEN- AND CROSSED-BELT DRIVES

1. Open-Belt Drive

An open belt drive is used when the driven pulley is desired to be rotated in the same direction as the driving pulley as shown in Fig. 9.1.

Generally, the centre distance for an open-belt drive is 14 to 16 m. If the centre distance is too large, the belt whips vibrate in a direction perpendicular to the direction of motion. For very shorter centre distances, the belt slip increases. Both these phenomena limit the use of belts for power transmission.

While transmitting power, one side of the belt is more tightened (known as tight side) as compared to the other (known as slack side). In case of horizontal drives, it is always desired that the tight side is at the lower side of two pulleys. This is because the sag of the belt will be more on the upper side than the lower side. This slightly increases the angles of wrap of the belt on the two pulleys than if the belt had been perfectly straight between the pulleys. In case the tight side is on the upper side, the sag will be greater at the lower side, reducing the angle of wrap, and slip could occur earlier. This ultimately affects the power to be transmitted.

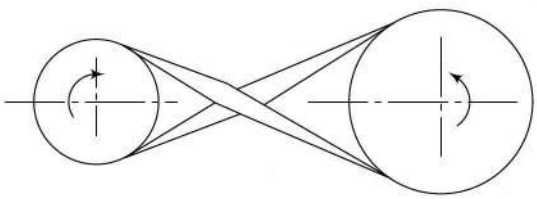

Fig. 9.3

2. Crossed-Belt Drive

A crossed-belt drive is adopted when the driven pulley is to be rotated in the opposite direction to that of the driving pulley (Fig. 9.3).

A crossed-belt drive can transmit more power than an open-belt drive as the angle of wrap is more. However, the belt has to bend in two different planes and it wears out more.

9.3 ACTION OF BELTS ON PULLEYS

To transmit torque from one shaft to another effectively, it is necessary that the belt does not slip over the pulley. To understand the action of belts on pulleys, consider a belt resting on the rim of a pulley. The belt is wrapped round the pulley to subtend an angle θ at its centre. The belt is tightened on the pulley by applying an equal amount of pull to the two ends of the belt. This results in an initial tension **T** on each end of the belt [Fig. 9.4(a)].

Now, if a small torque or tangential force **F** in the clockwise direction is applied to the driving pulley, it tends to rotate the belt with it. But if the motion of the belt is resisted, the pulley will have a tendency to slip over the belt. Considering the equilibrium of the pulley, it can be said that the slipping of the pulley is prevented by a frictional force **F′** (=**F**) acting in the counter-clockwise

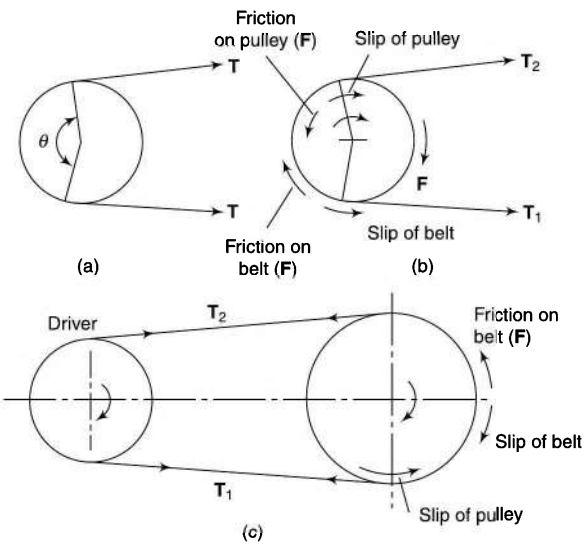

Fig. 9.4

direction. Similarly, considering the equilibrium of the belt, it can be said that the belt is prevented from slipping in the counter-clockwise direction (opposite to that of pulley) due to a frictional force equal to F in the clockwise direction (opposite to that on pulley). The frictional force in the belt results in an increased tension on one end of the belt (T_1) and a decrease in tension on the other (T_2) such that $(T_1 - T_2) = F$ [Fig. 9.4(b)].

If the tangential force on the pulley in increased, at one stage, it will just cause relative motion (slip) between the belt and the pulley. This will indicate that the frictional force has reached the limiting value and the force **F** on the pulley should not be increased further.

Now, consider a belt and pulley arrangement as shown in Fig. 9.4(c). Here, a belt with an initial tension **T** passes over driving and driven pulleys. On the driving side, the belt would rotate with the pulley with no relative slip between the two as long as the tangential force on the pulley, **F** ($=T_1 - T_2$) is less than the frictional force. On the driven side, the pulley rotates with the belt in the clockwise direction which means that the pulley can have a tendency to slip back in the counter-clockwise direction. This implies that the belt will have a tendency to slip over the pulley in the clockwise direction meaning a counter-clockwise frictional force equal to $(T_1 - T_2)$.

9.4 VELOCITY RATIO

Velocity ratio is the ratio of speed of the driven pulley to that of the driving pulley.

Let N_1 = rotational speed of the driving pulley
N_2 = rotational speed of the driven pulley
D_1 = diameter of the driving pulley
D_2 = diameter of the driven pulley
t = thickness of the belt.

Neglecting any slip between the belt and the pulleys and also considering the belt to be inelastic,
Speed of belt on driving pulley = speed of belt on driven pulley

$$\left(D_1 + 2\frac{t}{2}\right)N_1 = \left(D_2 + 2\frac{t}{2}\right)N_2$$

or velocity ratio (VR) $= \dfrac{N_2}{N_1} = \dfrac{D_1 + t}{D_2 + t}$ (9.1)

9.5 SLIP

The effect of slip is to decrease the speed of the belt on the driving shaft, and to decrease the speed of the driven shaft.

Let ω_1 = angular velocity of the driving pulley
ω_2 = angular velocity of the driven pulley
S_1 = percentage slip between the driving pulley and the belt
S_2 = percentage slip between the driven pulley and the belt
S = total percentage slip,

Peripheral speed of driving pulley $= \omega_1\left(\dfrac{D_1 + t}{2}\right)$

Speed of belt on the driving pulley $= \left[\omega_1\left(\dfrac{D_1 + t}{2}\right)\right]\left(\dfrac{100 - S_1}{100}\right)$

This is also the speed of the belt on the driven pulley.

Peripheral speed of driven pulley

$$= \left[\omega_1\left(\frac{D_1+t}{2}\right)\right]\left(\frac{100-S_1}{100}\right)\left(\frac{100-S_2}{100}\right)$$

As S is the total percentage slip,

Peripheral speed of driven shaft $= \left[\omega_1\left(\frac{D_1+t}{2}\right)\right]\left(\frac{100-S}{100}\right)$

$$\left[\omega_1\left(\frac{D_1+t}{2}\right)\right]\left(\frac{100-S_1}{100}\right)\left(\frac{100-S_2}{100}\right) = \left[\omega_1\left(\frac{D_1+t}{2}\right)\right]\left(\frac{100-S}{100}\right)$$

or $$\frac{(100-S_1)(100-S_2)}{100\times 100} = \frac{100-S}{100}$$

or $$(100-S_1)(100-S_2) = 100\,(100-S)$$

or $$10\,000 - 100\,S_2 - 100\,S_1 + S_1\,S_2 = 10\,000 - 100\,S$$

or $$100\,S = 100\,S_1 + 100\,S_2 - S_1\,S_2$$

or $$S = S_1 + S_2 - 0.01\,S_1\,S_2 \tag{9.2}$$

Effect of slip is to reduce the velocity ratio,

$$\text{VR} = \frac{N_2}{N_1} = \left(\frac{D_1+t}{D_2+t}\right)\left(\frac{100-S}{100}\right) \tag{9.3}$$

Also, it is to be remembered that slip will first occur on the pulley with smaller angle of lap, i.e., on the smaller pulley.

Example 9.1 *A shaft runs at 80 rpm and drives another shaft at 150 rpm through belt drive. The diameter of the driving pulley is 600 mm. Determine the diameter of the driven pulley in the following cases:*

(i) Neglecting belt thickness
(ii) Taking belt thickness as 5 mm
(iii) Assuming for case (ii) a total slip of 4%
(iv) Assuming for case (ii) a slip of 2% on each pulley

Solution $N_1 = 80$ rpm $\quad D_1 = 600$ mm
$N_2 = 150$ rpm

(i) $\frac{N_2}{N_1} = \frac{D_1}{D_2}$ or $\frac{150}{80} = \frac{600}{D_2}$

or $D_2 = \underline{320 \text{ mm}}$

(ii) $\frac{N_2}{N_1} = \frac{D_1+t}{D_2+t}$ or $\frac{150}{80} = \frac{600+5}{D_2+5}$

$D_2 = 317.7$ mm

(iii) $\frac{N_2}{N_1} = \frac{D_1+t}{D_2+t}\left(\frac{100-S}{100}\right)$

or $\frac{150}{80} = \left(\frac{600+5}{D_2+5}\right)\left(\frac{100-4}{100}\right)$

$D_2 = 304.8$ mm

(iv) $\frac{N_2}{N_1} = \frac{D_1+t}{D_2+t}\left(\frac{100-S}{100}\right)$

where $S = S_1 + S_2 - 0.01 S_1 S_2$

$= 2 + 2 - 0.01 \times 2 \times 2$

$= 3.96$

$\frac{150}{80} = \left(\frac{600+5}{D_2+5}\right)\left(\frac{100-3.96}{100}\right)$

$D_2 = \underline{304.9 \text{ mm}}$

9.6 MATERIAL FOR BELTS AND ROPES

Choice of materials for the belts and ropes is influenced by climate or environmental conditions along with the service requirements. The common materials are as given below:

1. Flat Belts

Usual materials for flat belts are leather, canvas, cotton and rubber. These belts are used to connect shafts up to 8–10 m apart with speeds as high as 22 m/s.

Leather belts are made from 1.2 to 1.5 m long strips. The thickness of a belt may be increased by cementing the strips together. The belts are specified by the number of layers, i.e., single, double or triple ply. The leather belts are cleaned and dressed periodically with suitable oils to keep them soft and flexible.

Fabric belts are made by folding cotton or canvas layers to three or more layers and stitching together. The belts are made waterproof by impregnating with linseed oil. These are mostly used in belt conveyors and farm machinery.

Rubber belts are very flexible and are destroyed quickly on coming in contact with heat, grease or oil. Usually, these are made endless. Rubber belts are used in paper and saw mills as these can withstand moisture.

2. V-Belts

These are made of rubber impregnated fabric with the angle of V between 30 to 40 degrees. These are used to connect shafts up to 4 m apart. Speed ratios can be up to 7 to 1 and belt speeds up to 24 m/s.

3. Ropes

The materials for ropes are cotton, hemp, manila or wire. Ropes may be used to connect shafts up to 30 m apart with operating speed less than 3 m/s.

Hemp and *manila* fibres are rough and thus, the ropes made from such materials are not very flexible. Manila ropes are stronger as compared to hemp ropes. Generally, the rope fibres are lubricated with tar, tallow or graphite to prevent sliding of fibres when the ropes are bent over the pulleys. The cotton ropes are soft and smooth and do not require lubrication. These are not as strong and durable as manila ropes.

Wire ropes are used when the power transmitted is large over long distances, may be up to 150 m such as cranes, conveyors, elevators, etc. Wire ropes are lighter in weight, have silent operation, do not fail suddenly, more reliable and durable, less costly and can withstand shock loads.

9.7 CROWING OF PULLEYS

As mentioned is Section 9.2, the rim of the pulley of a flat-belt drive is slightly crowned to prevent the slipping off the belt from the pulley. The crowing can be in the form of conical surface or a convex surface.

Assume that somehow a belt comes over the conical portion of the pulley and takes the position as shown in Fig. 9.5(a), i.e., its centre line remains in a plane, the belt will touch the rim surface at its one edge only. This is impractical. Owing to the pull, the belt always tends to stick to the rim surface. The belt also has a lateral stiffness. Thus, a belt has to bend in the way shown in Fig. 9.5(b) to be on the conical surface of the pulley.

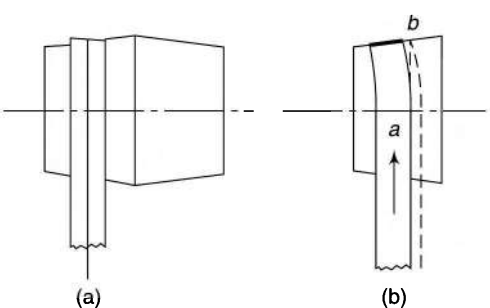

Fig. 9.5

Let the belt travel in the direction of the arrow. As the belt touches the cone, the point *a* on it tends to adhere to the cone surface due to pull on the belt. This means as the pulley will take a quarter turn, the point *a* on the belt will be carried to *b* which is towards the mid-plane of the pulley than that previously occupied by the edge of the belt. But again, the belt cannot be stable on the pulley in the upright position and has to bend to stick to the cone surface, i.e., it will occupy the position shown by dotted lines.

Thus, if a pulley is made up of two equal cones or of convex surface, the belt will tend to climb on the slopes and will thus, run with its centre line on the mid-plane of the pulley.

The amount of crowing is usually 1/96 of the pulley face width.

9.8 TYPES OF PULLEYS

1. Idler Pulleys

With constant use, the belt is permanently stretched a little in length. This reduces the initial tension in the belt leading to lower power transmission capacity. However, the tension in the belt can be restored to the original value by using an arrangement shown in Fig. 9.6(a).

A bell-crank lever, hinged on the axis of the smaller pulley, supports adjustable weights on its one arm and the axis of a pulley on the other. The pulley is free to rotate on its axis and is known as *idler pulley*. Owing to weights on one arm of the lever, the pulley exerts pressure on the belt increasing the tension and the angle of contact. Thus, life of the belt is increased and power capacity is restored to the previous value.

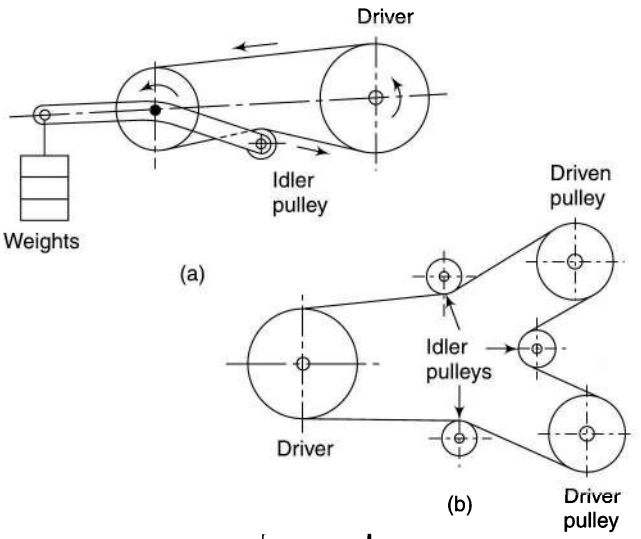

Fig. 9.6

The pressure force on the belt can be varied by changing the weights on the arm of the lever.

Motion of one shaft can be transmitted to two or more than two shafts by using a number of idler pulleys. This has been illustrated in Fig. 9.6(b).

2. Intermediate Pulleys

When it is required to have large velocity ratios, ordinarily, the size of the larger pulley will be quite big. However, by using an *intermediate* (or *countershaft*)

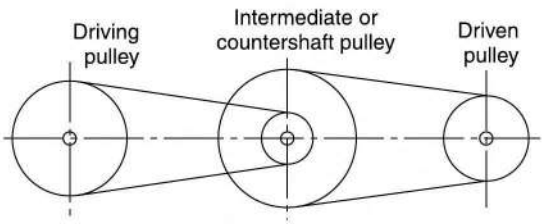

Fig. 9.7

A compound belt drive

pulley, the size can be reduced as shown in Fig. 9.7. This type of drive is also referred as *compound belt drive*.

3. Loose and Fast Pulleys

Many times, it is required to drive several machines from a single main shaft. In such cases, some arrangement to link or delink a machine to or from the main shaft has to be incorporated as all the machines may not be operating simultaneously. The arrangement, usually, provided is that of using a loose pulley along with a fast pulley (Fig. 9.8).

The *fast pulley* is keyed to the shaft and rotates with it at the same speed and thus, transmits power. A *loose pulley* is not keyed to the shaft and thus, is unable to transmit any power. Whenever, a machine is to be driven, the belt is mounted on the fast pulley and when it is not required to transmit any power, the belt is pushed on to the loose pulley placed adjacent to the fast pulley.

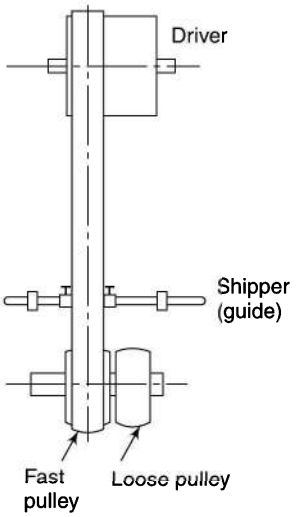

Fig. 9.8

4. Guide Pulleys

A *guide pulley* is used to connect two non-parallel shafts in such a way that they may run in either direction, and still make the pulleys deliver the belt properly in accordance with the law of belting as shown in Fig. 9.9(a) (refer Sec. 9.9 for the law of belting). A guide pulley can also be used to connect even the intersecting shafts as shown in Fig. 9.9(b).

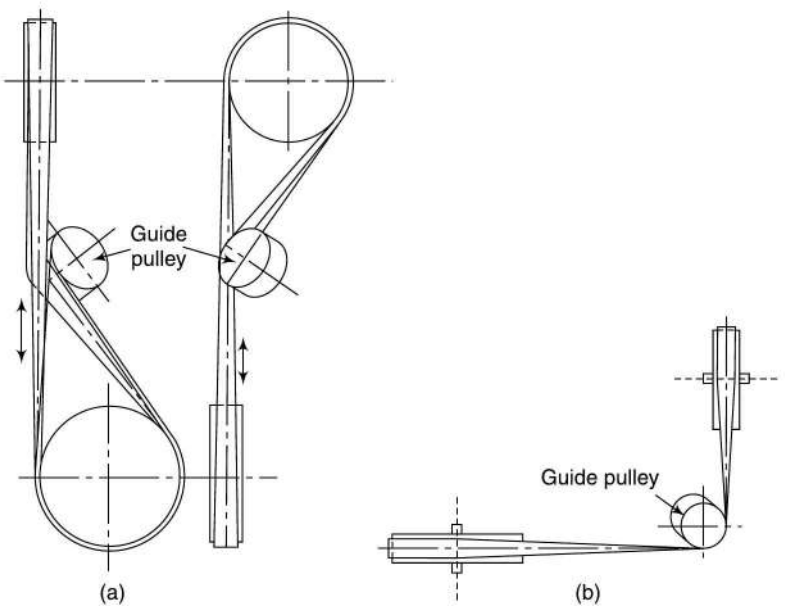

Fig. 9.9

9.9 LAW OF BELTING

The law of belting states that the centre line of the belt when it approaches a pulley must lie in the mid plane of that pulley. However, a belt leaving a pulley may be drawn out of the plane of the pulley. In other words, the plane of a pulley must contain the point at which the belt leaves the other pulley.

By following this law, non-parallel shafts may be connected by a flat belt. In Fig. 9.10, two shafts with two pulleys are at right angles to each other. It can be observed that the centre line of the belt approaching the larger pulley lies in its plane which is also true for the smaller pulley. Also, the points at which the belt leaves a pulley are contained in the plane of the other pulley.

It should also be observed that it is not possible to operate the belt in the reverse direction without violating the law of belting. Thus, in case of non-parallel shafts, motion is possible only in one direction. Otherwise, the belt is thrown off the pulley. However, it is possible to run a belt in either direction on the pulleys of two non-parallel or intersecting shafts with the help of guide pulleys (refer to Sec. 9.8). The law of belting is still satisfied.

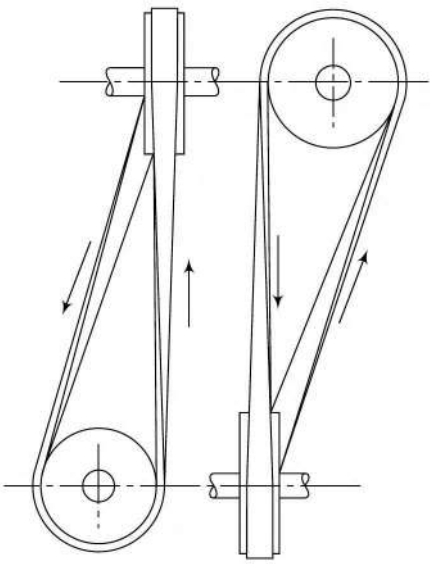

Fig. 9.10

9.10 LENGTH OF BELT

1. Open Belt

Let A and B be the pulley centres and CD and EF, the common tangents to the two pulley circles (Fig. 9.11). Total length of the belt comprises

(a) the length in contact with the smaller pulley

(b) the length in contact with the larger pulley

(c) the length not in contact with either pulley

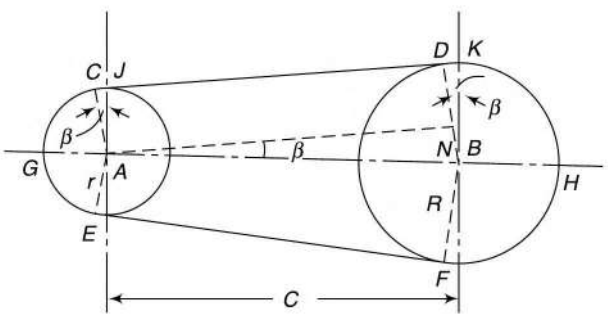

Fig. 9.11

Let L_o = length of belt for open belt drive

r = radius of smaller pulley

R = radius of larger pulley

C = Centre distance between pulleys

β = angle subtended by each common tangent (CD or EF) with AB, the line of centres of pulleys.

Draw AN parallel to CD so that $\angle BAN = \beta$ and $BN = R - r$

As CD is tangent to two circles, AC and BD both are perpendicular to CD or AN.

Now, $AB \perp BK$ and $AN \perp BD$.

$\therefore$ $\angle DBK = \angle NAB = \beta$

Similarly, as $BA \perp AJ$, $NA \perp AC$

$\angle CAJ = \angle NAB = \beta$

L_o = 2 [Arc GC + CD + arc DH]

$$= 2\left[\left(\frac{\pi}{2}-\beta\right)r + AN + \left(\frac{\pi}{2}+\beta\right)R\right]$$

$$= 2\left[\left(\frac{\pi}{2}-\beta\right)r + C\cos\beta + \left(\frac{\pi}{2}+\beta\right)R\right]$$

$$= \pi(R+r) + 2\beta(R-r) + 2C\cos\beta \tag{9.4}$$

This relation gives the exact length of belt required for an open belt drive. In this relation,

$$\beta = \sin^{-}\left(\frac{R-r}{C}\right) \tag{9.5}$$

An approximate relation for the length of belt can also be found in terms of R, r and C eliminating β, if β is small, i.e., if the difference in radii of the two pulleys is small and the centre distance is large.

For small angle of β, $\sin\beta \approx \beta$

$$\therefore \qquad \beta = \frac{R-r}{C}$$

and

$$\cos\beta = \sqrt{1-\sin^2\beta}$$

$$= (1-\sin^2\beta)^{1/2}$$

$$= \left(1-\frac{1}{2}\sin^2\beta + ...\right) \qquad \text{[By binomial theorem]}$$

or

$$\cos\beta = \left(1-\frac{1}{2}\beta^2\right) = 1-\frac{1}{2}\left(\frac{R-r}{C}\right)^2$$

$$L_o = \pi(R+r) + 2\left(\frac{R-r}{C}\right)(R-r) + 2C\left[1-\frac{1}{2}\left(\frac{R-r}{C}\right)^2\right]$$

$$= \pi(R+r) + 2\frac{(R-r)^2}{C} + 2C - \frac{2C}{2}\frac{(R-r)^2}{C^2}$$

$$= \pi(R+r) + 2\frac{(R-r)^2}{C} - \frac{(R-r)^2}{C} + 2C$$

$$= \pi(R+r) + \frac{(R-r)^2}{C} + 2C \tag{9.6}$$

2. Crossed-Belt

As before, let A and B be the pulley centres and CD and EF, the common tangents (crossed) to the two pulley circles (Fig. 9.12).

Draw AN parallel to CD meeting BD produced at N so that $\angle BAN = \beta$

We have, $\angle CAJ = \angle DBK = \beta$

Let L_c = length of belt for crossed-belt drive

Then

$$L_c = 2[\text{Arc } GC + CD + \text{Arc } DH]$$

$$= 2\left[\left(\frac{\pi}{2}+\beta\right)r + AN + \left(\frac{\pi}{2}+\beta\right)R\right]$$

$$= 2\left[\left(\frac{\pi}{2}+\beta\right)r + C\cos\beta + \left(\frac{\pi}{2}+\beta\right)R\right]$$

$$= (\pi + 2\beta)(R + r) + 2C\cos\beta \tag{9.7}$$

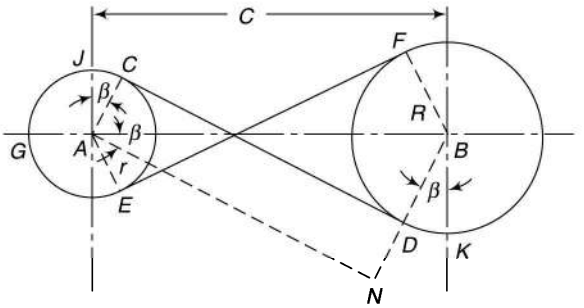

Fig. 9.12

This is the exact length of a crossed-belt drive where

$$\beta = \sin^{-}\left(\frac{R+r}{C}\right) \tag{9.8}$$

For small angle of β, $\sin\beta \approx \beta$

$$\therefore \qquad \beta = \frac{R+r}{C}$$

and

$$\cos\beta = \left(1 - \frac{1}{2}\beta^2\right) = 1 - \frac{1}{2}\left(\frac{R+r}{C}\right)^2$$

$$L_c = \left[\pi + 2\left(\frac{R+r}{C}\right)\right](R+r) + 2C\left[1 - \frac{1}{2}\left(\frac{R+r}{C}\right)^2\right]$$

$$= \pi(R+r) + 2\frac{(R+r)^2}{C} + 2C - \frac{(R+r)^2}{C}$$

$$= \pi(R+r) + \frac{(R+r)^2}{C} + 2C \tag{9.9}$$

This is an approximate relation for the length in terms of R, r and C.

It can be noted that the length of belt depends only on the sum of the pulley radii and the centre distance in case of crossed-belt drive whereas it depends on the sum as well as the difference of the pulley radii apart from the centre distance in case of open-belt drive.

Example 9.2 *Two parallel shafts, connected by a crossed belt, are provided with pulleys 480 mm and 640 mm in diameters. The distance between the centre lines of the shafts is 3 m. Find by how much the length of the belt should be changed if it is desired to alter the direction of rotation of the driven shaft.*

Solution $R = 320$ mm

$C = 3$ m

$r = 240$ mm

For cross belt

$$\beta = \sin^{-}\left(\frac{R+r}{C}\right) = \sin^{-}\left(\frac{0.32+0.24}{3}\right) = \sin^{-} 0.1867$$

$= 10°45'$ or 0.1878 rad

$\cos\beta = 0.9825$

$L_c = (\pi + 2\beta)(R + r) + 2C\cos\beta$

$= (\pi + 2 \times 0.1878)(0.32 + 0.24) + 2 \times 3 \times 0.9825$

$= \underline{7.865 \text{ m}}$

For open belt

$$\beta = \sin^{-}\left(\frac{R-r}{C}\right) = \sin^{-}\left(\frac{0.32-0.24}{3}\right) = \sin^{-} 0.0267$$

$= 1°32'$

As the angle is very small, the approximate relation can be used.

$$L_o = \pi(R+r) + \frac{(R-r)^2}{C} + 2C$$

$$= \pi\,(0.32+0.24) + \frac{(0.32-0.24)^2}{3} + 2 \times 3$$

$= \underline{7.761 \text{ m}}$

The length of the belt should be reduced by

$L_c - L_o = 7.865 - 7.761 = 0.104$ m or $\underline{104 \text{ mm}}$

9.11 CONE (STEPPED) PULLEYS

Many times, it is required to run the driven shaft at different speeds whereas the driving shaft runs at constant speed which is the speed of the motor. This is facilitated by using a pair of cone or stepped pulleys (Fig. 9.13). A cone pulley has different sets of pulley radii to give varying speeds of the driven shaft. The radii of different steps are so chosen that the same belt can be used at different sets of the cone pulleys.

Let n = speed of the driving shaft (constant)

N_n = speed of the driven shaft when the belt is on nth step

r_n = radius of the nth step of the driving pulley

R_n = radius of the nth step of the driven pulley

The subscript n denotes 1, 2, 3, … n.

The ratio of speeds of driving to driven shaft is inversely proportional to the ratio of their pulley radii, i.e.,

$$\frac{N_1}{n} = \frac{r_1}{R_1} \qquad \text{(i)}$$

Thus, to get speed N_1 of the driven shaft from the first pair of steps of the cone pulleys, dimensions of r_1 and R_1 can be chosen convenient to the design.

For the second pair of steps,

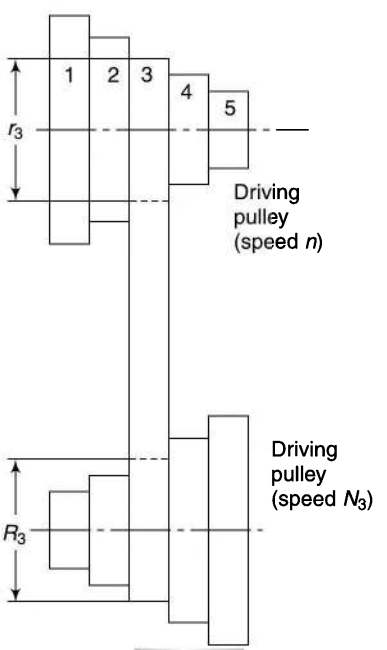

Fig. 9.13

$$\frac{N_2}{n} = \frac{r_2}{R_2}$$

Again some convenient dimensions of r_2 and R_2 can be chosen according to the ratio of N_2/n. Similarly, for other pair of steps also, the same procedure can be adopted. For the nth pair,

$$\frac{N_n}{n} = \frac{r_n}{R_n} \tag{ii}$$

However, it is always desired that the same belt is used on all the pairs of steps of the cone pulley. To fulfil this condition, the length of the belt has to be the same for all pairs of steps, i.e.,

$$L_1 = L_2 = \ldots\ldots\ldots\ldots = L_n$$

$$(R_1 + r_1) + \frac{(R_1 - r_1)^2}{C} + 2C = (R_2 + r_2) + \frac{(R_2 - r_2)^2}{C} + 2C = \ldots\ldots\ldots$$

or

$$= (R_n + r_n) + \frac{(R_n - r_n)^2}{C} + 2C$$

$$(R_1 + r_1) + \frac{(R_1 - r_1)^2}{C} = (R_2 + r_2) + \frac{(R_2 - r_2)^2}{C} = \ldots\ldots\ldots$$

or

$$= (R_n + r_n) + \frac{(R_n - r_n)^2}{C} \tag{9.10}$$

As R_1 and r_1 have already been chosen for the first pair and ratios $r_2/R_2, \ldots, r_n/R_n$ are known, their values can be easily calculated.

Also, it is usual practice to have speeds of the driven shaft in geometrical progression and to make the driving and the driven cones similar.

Let K = ratio of progression of speed

Then $$\frac{N_2}{N_1} = \frac{N_3}{N_2} = \ldots. = \frac{N_n}{N_{n-1}} = K$$

$\therefore$ $$N_2 = KN_1$$
$$N_3 = KN_2 = K^2 N_1$$
$$\ldots\ldots\ldots\ldots\ldots\ldots\ldots$$
$$N_n = KN_{n-1} = K^{n-1} N_1$$

To obtain these speeds of the driven shaft, the ratio of the radii of different pairs of pulleys can be obtained as under:

$$N_n = K^{n-1} N_1$$

$$= K^{n-1} n \frac{r_1}{R_1} \qquad \text{[from (i)]}$$

or $$\frac{N_n}{n} = K^{n-1} \frac{r_1}{R_1}$$

or $$\frac{r_n}{R_n} = K^{n-1} \frac{r_1}{R_1} \qquad \text{[from (ii)]}$$

Thus, $\frac{r_2}{R_2} = K \frac{r_1}{R_1}; \frac{r_3}{R_3} = K^2 \frac{r_1}{R_1}$, and so on.

If the driving and the driven pulleys are to be made similar,

$$\frac{r_n}{R_n} = \frac{R_1}{r_1} \text{ or } K^{n-1}\frac{r_1}{R_1} = \frac{R_1}{r_1} \text{ or } \left(\frac{R_1}{r_1}\right)^2 = K^{n-1} \text{ or } \frac{R_1}{r_1} = \sqrt{K^{n-1}} \tag{9.11}$$

This gives the ratio R_1/r_1. After deciding its value, ratio r_2/R_2, r_3/R_3, etc., can be obtained and then from the relation for the length of belt, the values of r_2, R_2, and r_3, R_3, etc., can be obtained.

If cone pulleys are being used for a crossed-belt drive, it is very easy to obtain the dimensions of the radii of different pairs of steps. In this case, the length of the belt is same if the sums of the radii of different pairs of steps are constant for a given centre distance between the pulleys, i.e.,

$$R_1 + r_1 = R_2 + r_2 = \ldots\ldots = R_n + r_n \tag{9.12}$$

Example 9.3 *Design a set of stepped pulleys to drive a machine from a countershaft that runs at 220 rpm. The distance between centres of the two sets of pulleys is 2 m. The diameter of the smallest step on the countershaft is 160 mm. The machine is to run at 80, 100 and 130 rpm and should be able to rotate in either direction.*

Solution: As the driven shaft is to rotate in either direction, both the cases of a crossed-belt and an open-belt are to be considered.

(*i*) ***For Crossed-belt System***

The smallest step on the countershaft will correspond to the biggest step on the machine shaft (or the minimum speed of the machine shaft).

$n_1 = n_2 = n_3 = 220$ rpm $\quad r_1 = 80$ mm

$N_1, N_2, N_3 = 80, 100, 130$ rpm respectively

(*a*) *For First Step*

$$\frac{R_1}{r_1} = \frac{n_1}{N_1} \text{ or } \frac{R_1}{80} = \frac{220}{80} \text{ or } R_1 = \underline{220 \text{ mm}}$$

(*b*) *For Second Step*

$$\frac{R_2}{r_2} = \frac{n_2}{N_2} = \frac{220}{100} \text{ or } R_2 = 2.2r_2$$

Also $\quad R_2 + r_2 = R_1 + r_1$

$2.2r_2 + r_2 = 220 + 80$

$3.2r_2 = 300$

$r_2 = \underline{93.75 \text{ mm}}$

$R_2 = 93.7 \times 2.2 = \underline{206.3 \text{ mm}}$

(*c*) *For third Step*

$$\frac{R_3}{r_3} = \frac{220}{130} \text{ or } R_3 = 1.69r_3$$

Also

$R_3 + r_3 = R_1 + r_1$

$1.69\, r_3 + r_3 = 220 + 80 = 300$

$r_3 = \underline{111.5 \text{ mm}}$

$R_3 = 111.5 \times 1.69 = \underline{188.5 \text{ mm}}$

(*ii*) ***For Open-belt System***

(*a*) *For First Step* $r_1 = 80$ mm $R_1 = 220$ mm as before

(*b*) *For Second Step*

$$\pi(R_2 + r_2) + \frac{(R_2 - r_2)^2}{C}$$

$$= \pi(R_1 + r_1) + \frac{(R_1 - r_1)^2}{C}$$

$$\text{or} \quad \pi(2.2r_2 + r_2) + \frac{(2.2r_2 - r_2)^2}{2}$$

$$= \pi(0.22 + 0.08) + \frac{(0.22 - 0.08)^2}{2}$$

$$10.05r_2 + \frac{1.44}{2}r_2^2 = 0.9523$$

$$r_2^2 + 13.958\, r_2 = 1.323$$

$$(r_2 + 6.979)^2 = 1.323 + (6.979)^2$$

$$= 50.029 = (7.073)^2$$

$r_2 = 7.073 - 6.979 = 0.094$ m or 94 mm

$R_2 = 2.2 \times 94 = \underline{206.8 \text{ mm}}$

(*c*) *For Third Step*

$$\pi(1.69r_3 + r_3) + \frac{(1.69r_3 - r_3)^2}{2} = 0.9523$$

$$\text{or} \quad 8.451r_3 + \frac{0.476}{2}r_3^2 = 0.9523$$

$$\text{or} \quad r_3^2 + 35.508r_3 = 4.001$$

$$\text{or} \quad (r_3^2 + 17.754)^2 = 4.001 + (17.754)^2$$

$$= 319.206 = (17.866)^2$$

or $r_3 = 17.866 - 17.754 = 0.112$ m or 112 mm

$R_3 = 112 \times 1.69 = \underline{189.3 \text{ mm}}$

9.12 RATIO OF FRICTION TENSIONS

1. Flat Belt

Let $\mathbf{T}_1$ = tension on tight side
$\mathbf{T}_2$ = tension on slack side
θ = angle of lap or contact of the belt over the pulley
μ = coefficient of friction between the belt and the pulley

Consider a short length of belt subtending an angle $\delta\theta$ at the centre of the pulley (Fig. 9.14).

Let $\mathbf{R}$ = normal (radial) reaction between the element length of belt and the pulley
$\mathbf{T}$ = tension on slack side of the element
$\delta\mathbf{T}$ = increase in tension on tight side than that on slack side
$\mathbf{T} + \delta\mathbf{T}$ = tension on tight side of the element

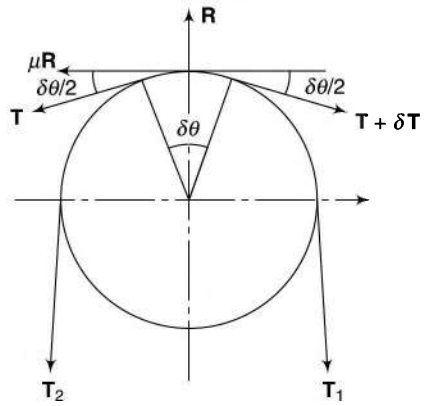

Fig. 9.14

Tensions $\mathbf{T}$ and $(\mathbf{T} + \delta\mathbf{T})$ act in directions perpendicular to the radii drawn at the ends of the elements. The friction force $\mu\mathbf{R}$ will act tangentially to the pulley rim resisting the slipping of the elementary belt on the pulley.

Resolving the forces in the tangential direction,

$$\mu R + T\cos\frac{\delta\theta}{2} - (T + \delta T)\cos\frac{\delta\theta}{2} = 0$$

As $\delta\theta$ is small,

$$\cos\frac{\delta\theta}{2} \approx 1$$

$$\therefore \qquad \mu R + T - T - \delta T = 0 \quad \text{or} \quad \delta T = \mu R \tag{i}$$

Resolving the forces in the radial direction,

$$R - T\sin\frac{\delta\theta}{2} - (T + \delta T)\sin\frac{\delta\theta}{2} = 0$$

As $\delta\theta$ is small,

$$\sin\frac{\delta\theta}{2} \approx \frac{\delta\theta}{2}$$

Thus,

$$R - T\frac{\delta\theta}{2} - T\frac{\delta\theta}{2} - \frac{\delta T\,\delta\theta}{2} = 0$$

Neglecting product of two small quantities,

$$R = T\,\delta\theta \tag{ii}$$

Inserting this value of R in (i),

$$\delta T = \mu . T\delta\theta \quad \text{or} \quad \frac{\delta T}{T} = \mu\delta\theta$$

Integrating between proper limits,

$$\int_{T_2}^{T_1} \frac{dT}{T} = \int_0^{\theta} \mu \; d\theta$$

or
$$\log_e \frac{T_1}{T_2} = \mu\theta$$

or
$$\frac{T_1}{T_2} = e^{\mu\theta} \tag{9.13}$$

It is to be noted that the above relation is valid only when the belt is on the point of slipping on the pulleys.

2. V-Belt or Rope

In case of a V-belt or rope, there are two normal reactions as shown in Fig. 9.15 so that the radial reaction is equal to 2**R** sin α.

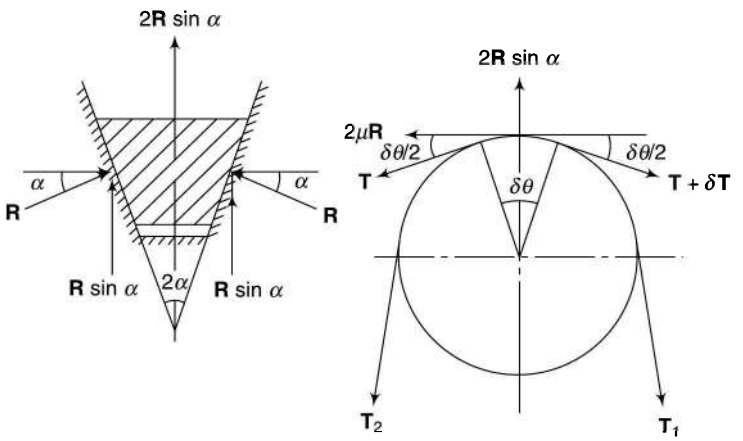

Fig. 9.15

Thus, total frictional force = $2(\mu R) = 2\mu R$.
Resolving the forces tangentially,

$$2\mu R + T\cos\frac{\delta\theta}{2} - (T + \delta T)\cos\frac{\delta\theta}{2} = 0$$

For small angle of $\delta\theta$,

$$\cos\frac{\delta\theta}{2} \approx 1 \cdot$$

$\therefore$
$$\delta T = 2\mu R \tag{iii}$$

Resolving the forces radially,

$$2R\sin\alpha - T\sin\frac{\delta\theta}{2} - (T + \delta T)\sin\frac{\delta\theta}{2} = 0$$

As $\delta\theta$ is small, $$\sin\frac{\delta\theta}{2} \approx \frac{\delta\theta}{2}.$$

$$2R\sin\alpha - T\frac{\delta\theta}{2} - T\frac{\delta\theta}{2} = 0$$

or $$R = \frac{T\delta\theta}{2\sin\alpha} \qquad \text{(iv)}$$

From (iii) and (iv),

$$\delta T = 2\mu\frac{T\delta\theta}{2\sin\alpha}$$

or $$\frac{\delta T}{T} = \frac{\mu\delta\theta}{\sin\alpha}$$

Integrating between proper limits,

$$\int_{T_2}^{T_1}\frac{dT}{T} = \int_0^{\theta}\frac{\mu\, d\theta}{\sin\alpha}$$

or $$\log_e\frac{T_1}{T_2} = \frac{\mu\theta}{\sin\alpha}$$

or $$\frac{T_1}{T_2} = e^{\mu\theta/\sin\alpha} \qquad (9.14)$$

The expression is similar to that for a flat-belt drive except that μ is replaced by $\mu/\sin\theta$, i.e., the coefficient of friction is increased by $1/\sin\theta$. Thus, the ratio T_1/T_2 is far greater in case of V-belts and ropes for the same angle of lap θ and coefficient of friction μ.

Again, it is to be noted that the above expression is derived on the assumption that the belt is on the point of slipping.

9.13 POWER TRANSMITTED

Let T_1 = tension on the tight side

T_2 = tension on the slack side

v = linear velocity of the belt

P = power transmitted

Then,

P = Net force × Distance moved/second

$= (T_1 - T_2) \times v$ (9.15)

This relation gives the power transmitted irrespective of the fact whether the belt is on the point of slipping or not. If it is, the relationship between T_1 and T_2 for a flat belt is given by $T_1/T_2 = e^{\mu\theta}$. If it is not, no particular relation is available to calculate T_1 and T_2.

Example 9.4 *A belt runs over a pulley of 800-mm diameter at a speed of 180 rpm. The angle of lap is 165° and the maximum tension in the belt is 2 kN. Determine the power transmitted if the coefficient of friction between the belt and the pulley is 0.3.*

Solution $T_1 = 2000$ N $\quad d = 0.8$ m

$N = 180$ rpm $\quad \mu = 0.3$

$\theta = 165° = 165 \times \pi/180 = 2.88$ rad

$$v = \frac{\pi dN}{60} = \frac{\pi \times 0.8 \times 180}{60} = 7.54 \text{ m/s}$$

$$\frac{T_1}{T_2} = e^{\mu\theta} = e^{0.3\times 2.88} = 2.37 \text{ or } T_1 = 2.37T_2$$

or $\quad 2000 = 2.37\, T_2$ or $T_2 = 843$ N

and $\quad P = (T_1 - T_2)\, v = (2000 - 843) \times 7.54$

$= 8724$ W or <u>8.724 kW</u>

Example 9.5 *A casting weighs 6 kN and is freely suspended from a rope which makes 2.5 turns round a drum of 200-mm diameter. If the drum rotates at 40 rpm, determine the force required by a man to pull the rope from the other end of the rope. Also, find the power to raise the casting. The coefficient of friction is 0.25.*

Solution $T_1 = 6000$ N $\quad d = 0.2$ m

$N = 40$ rpm $\quad \mu = 0.25$

$\theta = 2.5 \times 2\pi = 15.7$ rad

$$v = \frac{\pi dN}{60} = \frac{\pi \times 0.2 \times 40}{60} = 0.419 \text{ m/s}$$

$$\frac{T_1}{T_2} = e^{\mu\theta} = e^{0.25\times 15.7} = 50.8 \text{ or } T_1 = 50.8T_2$$

or $\quad 6000 = 50.8\, T_2$ or $T_2 = 118$ N

and $\quad P = (T_1 - T_2)\, v = (6000 - 118) \times 0.419$

$= 2464$ W or <u>2.464 kW</u>

Example 9.6 *A belt drive transmits 8 kW of power from a shaft rotating at 240 rpm to another shaft rotating at 160 rpm. The belt is 8 mm thick. The diameter of the smaller pulley is 600 mm and the two shafts are 5 m apart. The coefficient of friction is 0.25. If the maximum stress in the belt is limited to 3 N/mm², find the width of the belt for (i) an open belt drive, and (ii) a cross-belt drive.*

Solution Speed of the driving pulley, $N_1 = 240$ rpm

Speed of the driven pulley , $N_2 = 160$ rpm

Thus, smaller pulley is the driver and

$d = 600$ mm

$r = 300$ mm; $P = 8$ kW; $C = 5$ m; $\mu = 0.25$;

$t = 8$ mm

$$D = \frac{240}{160} \times 600 = 900 \text{ mm or } R = 450 \text{ mm}$$

$$v = \frac{\pi dN_1}{60} = \frac{\pi \times 0.6 \times 240}{60} = 7.54 \text{ m/s}$$

$P = (T_1 - T_2)\, v$

or $\quad 8000 = (T_1 - T_2) \times 7.54$

or $\quad T_1 - T_2 = 1061 \qquad$ (i)

(i) Open-belt drive

In designing the belt drive, the angle of contact on the smaller pulley has to be considered as it is the lesser of the two angles of contact.

Now, angle of contact on the smaller pulley,

$$\theta = \pi - 2\beta = \pi - 2\sin^{-1}\left(\frac{R-r}{C}\right)$$

$$\text{or } \theta = \pi - 2\sin^{-}\left(\frac{450-300}{5000}\right)$$

$$= \pi - 3.438° = \pi - 0.06 = 3.082 \text{ rad}$$

Also $\dfrac{T_1}{T_2} = e^{\mu\theta}$

$$\text{or } \frac{T_1}{T_2} = e^{0.25\times 3.082} = 2.161 \text{ or } T_1 = 2.161T_2 \qquad \text{(ii)}$$

From (i) and (ii),

$2.161\, T_2 - T_2 = 1061$

$T_2 = 914$ N

$T_1 = 1975$ N

The maximum tension, $T_1 = \sigma.b.t$

or $1975 = 3 \times b \times 8$ or $b = 82.3$ mm

(ii) Cross-belt drive

$$\theta = \pi + 2\beta = \pi + 2\sin^{-1}\left(\frac{R+r}{C}\right)$$

or $\theta = \pi + 2\sin^{-}\left(\frac{450+300}{5000}\right)$

$= \pi + 17.254° = \pi + 0.301 = 3.443$ rad

Also $\frac{T_1}{T_2} = e^{\mu\theta}$

or $\frac{T_1}{T_2} = e^{0.25\times 3.443} = 2.365$ or $T_1 = 2.365T_2$ (iii)

From (i) and (iii),

$2.365T_2 - T_2 = 1061$

$T_2 = 777$ N

$T_1 = 1838$ N

The maximum tension, $T_1 = \sigma.b.t$

or $1838 = 3b \times 8$ or $b = 76.6$ mm

Example 9.7 *A 100-mm wide and 10-mm thick belt transmits 5 kW of power between two parallel shafts. The distance between the shaft centres is 1.5 m and the diameter of the smaller pulley is 440 mm. The driving and the driven shafts rotate at 60 rpm and 150 rpm respectively. The coefficient of friction is 0.22. Find the stress in the belt if the two pulleys are connected by (i) an open belt, and (ii) a cross belt. Take μ = 0.22.*

Solution Speed of the driving pulley, $N_1 = 60$ rpm

Speed of the driven pulley, $N_2 = 150$ rpm

Thus, smaller pulley is the driven pulley and $d = 440$ mm

$P = 5$ kW; $b = 100$ mm; $C = 1.5$ m; $t = 10$ mm; $\mu = 0.22$; $r = 220$ mm;

$$v = \omega_2\left(r + \frac{t}{2}\right) = \frac{2\pi N_2}{60}\left(r + \frac{t}{2}\right)$$

$$= \frac{2\times\pi\times 150}{60}\left(220 + \frac{10}{2}\right)$$

$= 3535$ mm/s or 3.535 m/s

$P = (T_1 - T_2)v$ or $5000 = (T_1 - T_2) \times 3.535$

or $T_1 - T_2 = 1414.5$ N (i)

(i) ***Open-belt Drive***

Angle of contact on the smaller pulley,

$$\theta = \pi - 2\beta = \pi - 2\sin^{-1}\left(\frac{R-r}{C}\right)$$

$$= \pi - 2\sin^{-1}\left(\frac{220\times 150/60 - 220}{1500}\right)$$

$= \pi - 25.4°$

$= \pi - 0.443$ (β is to be in radians)

$= 2.698$ rad.

$\frac{T_1}{T_2} = e^{\mu\theta}$

or $\frac{T_1}{T_2} = e^{0.22\times 2.698} = 1.81$ or $T_1 = 1.81T_2$ (ii)

From (i) and (ii), $T_1 - T_2 = 1414.5$

$\therefore$ $1.81T_2 - T_1 = 1414.5$

or $0.81T_2 = 1414.5$

$T_2 = 1746.3$ N and $T_1 = 1746.3 \times 1.81 = 3160.8$ N

$\therefore$ stress in the belt,

$$\sigma_t = \frac{T_1}{b\times t} = \frac{3160.8}{100\times 10} = \underline{3.16 \text{ N/mm}^2}$$

(ii) **Cross-*belt Drive***

$$\theta = \pi + 2\beta = \pi + 2\sin^{-1}\left(\frac{R+r}{C}\right)$$

or $\theta = \pi + 2\sin^{-1}\left(\frac{220\times 150/60 + 220}{1500}\right)$

$= \pi + 61.8°$

or $\theta = \pi + 1.08 = 4.22$ rad

$\frac{T_1}{T_2} = e^{0.22\times 4.22} = 2.53$

$T_1 - T_2 = 3160.8 - 1746.3 = 1414.5$ (iii)

From (i) and (iii), $2.53T_2 - T_1 = 1414.5$

$T_2 = 924.5$ N

$T_1 = 924.5 \times 2.53 = 2339$ N

$$\sigma_t = \frac{2339}{100\times 10} = \underline{2.339 \text{ N/mm}^2}$$

9.14 CENTRIFUGAL EFFECT ON BELTS

While in motion, as a belt passes over a pulley, the centrifugal effect due to its own weight tends to lift the belt from the pulley. Owing to symmetry, the centrifugal force produces equal tensions on the two sides of the belt, i.e., on the tight side as well as on the slack side.

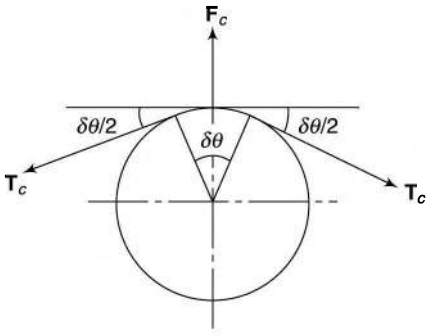

Fig. 9.16

Consider a short element of belt (Fig. 9.16).

Let m = mass per unit length of belt.

$\mathbf{T}_c$ = centrifugal tension on tight and slack sides of element

$\mathbf{F}_c$ = centrifugal force on the element

r = radius of the pulley

v = velocity of the belt

$\delta\theta$ = angle of lap of the element over the pulley

$\mathbf{F}_c$ = mass of element × acceleration

= (length of element × mass per unit length) × acceleration

$$= (r\delta\theta \times m) \times \frac{v^2}{r}$$

$$= mv^2\delta\theta \qquad \text{(i)}$$

Also,

$$F_c = 2T_c \sin\frac{\delta\theta}{2}$$

As $\delta\theta$ is small,

$$\sin\frac{\delta\theta}{2} \approx \frac{\delta\theta}{2}$$

$$F_c = 2T_c\frac{\delta\theta}{2}$$

$$= T_c\delta\theta \qquad \text{(ii)}$$

From (i) and (ii),

$$T_c\delta\theta = mv^2\delta\theta$$

or

$$T_c = mv^2 \qquad (9.16)$$

Thus, centrifugal tension is independent of the tight and slack side tensions and depends only on the velocity of the belt over the pulley.

Also,

$$\text{Centrifugal stress in the belt} = \frac{\text{Centrifugal tension}}{\text{area of cross section of belt}} = \frac{T_c}{a}$$

Total tension on tight side = friction tension + centrifugal tension

$$T = T_1 + T_c \tag{9.17}$$

Total tension of slack side = $T_2 + T_c$

It can be shown that the power transmitted is reduced if centrifugal effect is considered for a given value of the total tight side tension T.

(a) *Centrifugal Tension Considered*

Friction tension on tight side = $T - T_c = T_1$

Let T_2 be the friction tension on the slack side.

Then $\dfrac{T_1}{T_2} = e^{\mu\theta} = k$, a constant

or $T_2 = \dfrac{T_1}{k}$

and power, $P = (T_1 - T_2)v = \left(T_1 - \dfrac{T_1}{k}\right)v = T_1\left(1 - \dfrac{1}{k}\right)v$

(b) *Centrifugal Tension Neglected*

Friction tension on tight side = T

Let T_2' be the friction tension on slack side.

$\dfrac{T_1}{T_2'} = e^{\mu\theta} = k$, or $T_2' = \dfrac{T}{k}$

Power, $P = (T_1 - T_2')v = \left(T - \dfrac{T}{k}\right)v = T\left(1 - \dfrac{1}{k}\right)v$

As T_1 is lesser than T, power transmitted is less when centrifugal force is taken into account.

9.15 MAXIMUM POWER TRANSMITTED BY A BELT

If it is desired that a belt transmits maximum possible power, two conditions must be fulfilled simultaneously.

1. Larger tension must reach the maximum permissible value for the belt.
2. The belt should be on the point of slipping. i.e., maximum frictional force is developed in the belt.

Now,

$$P = (T_1 - T_2)v = T_1\left(T_1 - \frac{T_2}{T_1}\right)v = T_1\left(1 - \frac{1}{e^{\mu\theta}}\right)v = T_1 kv$$

where $k = 1 - \dfrac{1}{e^{\mu\theta}}$ = constant

or $P = (T - T_c)\, kv$

$= kTv - kmv^2 v = kTv - kmv^3$

The maximum tension T in the belt should not exceed the permissible limit. Hence, treating T as constant and differentiating the power with respect to v and equating the same equal to zero, we get

$$\frac{dP}{dv} = kT - 3\,kmv^2 = 0$$

or $$T = 3mv^2 = 3T_c$$

or $$T_c = \frac{T}{3} \tag{9.18}$$

Therefore, for maximum power transmission, centrifugal tension in the belt must be equal to one-third of the maximum allowable belt tension and the belt should be on the point of slipping.

Also,

$$T_1 = T - T_c = T - \frac{T}{3} = \frac{2}{3}T$$

and

$$v_{\max} = \sqrt{\frac{T}{3m}} \tag{9.19}$$

Example 9.8 *An open-belt drive is required to transmit 10 kW of power from a motor running at 600 rpm. Diameter of the driving pulley is 250 mm. The speed of the driven pulley is 220 rpm. The belt is 12 mm thick and has a mass density of 0.001 g/mm². Safe stress in the belt is not to exceed 2.5 /mm². The two shafts are 1.25 m apart. The coefficient of friction is 0.25.*

Determine the width of the belt.

Solution Speed of the driving pulley, N_1= 600 rpm

Speed of the driven pulley, N_2= 220 rpm

Thus, smaller pulley is the driver and

$d = 250$ mm

$P = 10$ kW; $t = 12$ mm;

$\rho = 0.001$ g/mm^2 = 1000 kg/m^2; r =125 mm;

$C = 1.25$ m; $N_2 = 220$ rpm ; $\mu = 0.25$;

$\sigma_t = 2.5$ N/mm^2 = 2.5×10^6 N/m^2

To calculate the width of the belt, we need to know the maximum tension in the belt which is the sum of the tight side tension and the centrifugal tension,

i.e., $T = T_1 + T_2$

Calculation of T_1

$$P = (T_1 - T_2)v$$

where $v = \omega\left(r + \frac{t}{2}\right) = \frac{2\pi N}{60}\left(r + \frac{t}{2}\right)$

$$= \frac{2\pi \times 600}{60}\left(125 + \frac{12}{2}\right) = 8230 \text{ mm/s or } 8.23 \text{ m/s}$$

$\therefore$ $10\,000 = (T_1 - T_2) \times 8.23$

or $T_1 - T_2 = 1215$

Also $\frac{T_1}{T_2} = e^{\mu\theta}$

where $\theta = \pi - 2\beta = \pi - 2\sin^{-1}\left(\frac{R_2 - R_1}{C}\right)$

or $\theta = \pi - 2\sin^{-}\left(\frac{125 \times 600/220 - 125}{1250}\right)$

or $\theta = \pi - 19.9° = \pi - 0.347 = 2.79$

$$\frac{T_1}{T_2} = e^{0.25\times 2.79} = 2.01 \text{ or } T_1 = 2.01T_2 \tag{ii}$$

From (i) and (ii),

$2.01\,T_2 - T_1 = 1215$

$T_2 = 1203$ N

$T_1 = 2418$ N

Calculation of T_c

$T_c = mv^2$

= mass per unit length × v^2

= volume per unit length × density × v^2

= (x-sectional area × length × density) × v^2

= (width × thickness × length × density) × v^2

$= b \times 0.012 \times 1 \times 1000 \times (8.23)^2$

= (812.8b) N (b in m)

$T = T_1 + T_c = \sigma_t \times (b \times t)$

$2418 + 812.8b = 2.5 \times 10^6 \times b \times 0.012$

$29\,187\,b = 2418$

$b = 0.0828$ m or <u>82.8 mm</u>

Example 9.9 *Two parallel shafts that are 3.5m apart are connected by two pulleys of 1-m and 400-mm diameters, the larger pulley being the driver runs at 220 rpm. The belt weighs 1.2 kg per metre length. The maximum tension in the belt is not to exceed 1.8 kN. The coefficient of friction is 0.28. Owing to slip on one of the pulleys, the velocity of the driven shaft is 520 rpm only. Determine the*

(i) torque on each shaft
(ii) power transmitted
(iii) power lost in friction
(iv) efficiency of the drive

Solution The larger pulley is the driver, $D = 1$ m; $N_1 = 220$ rpm;

$R = 500$ mm; $d = 400$ mm; $r = 200$ mm; $N_2 = 520$ rpm; $C = 3.5$ m; $\mu = 0.28$; $m = 1.2$ kg/m; $T = 1800$ N

$$v = \frac{\pi D N_1}{60} = \frac{\pi \times 1 \times 220}{60} = 11.52 \text{ m/s}$$

Also $T_c = mv^2 = 1.2 \times 11.52^2 = 159$ N

$\therefore$ tension on the tight side, $T_1 = T - T_c$
$= 1800 - 159 = 1641$ N

$$\text{Now, } \theta = \pi - 2\sin^{-1}\left(\frac{R-r}{C}\right)$$

$$= \pi - 2\sin^{-}\left(\frac{500-200}{3500}\right) = \pi - 9.834°$$

$$= \pi - 0.172 = 2.97 \text{ rad}$$

$$\text{Also } \frac{T_1}{T_2} = e^{\mu\theta} = e^{0.28\times 2.97} = 2.297 \text{ or } T_1 = 2.297\, T_2$$

or $T_2 = 1641/2.297 = 714$ N

(i) Torque on larger pulley $= (T_1 - T_2)R$
$= (1641 - 714) \times 0.5 = 463.5$ N.m
Torque on smaller pulley $= (T_1 - T_2)r$
$= (1641 - 714) \times 0.2 = 185.4$ N.m

(ii) $P = (T_1 - T_2)v = (1641 - 714) \times 11.52$
$= 10679$ W $= 10.679$ kW

(iii) $$\text{Power input} = \frac{2\pi N_1 T_1}{60} = \frac{2\pi \times 220 \times 463.5}{60}$$
10 678 W…(T_1 is the torque)

$$\text{Power output} = \frac{2\pi N_2 T_2}{60} = \frac{2\pi \times 520 \times 185.4}{60}$$
$= 10\,096$ W…(T_2 is the torque)

Power loss = 10 678 – 10 096 = 582 W

(iv) $$\text{Efficiency} = \frac{\text{Output power}}{\text{Input power}} = \frac{10096}{10678}$$
$= 0.945$ or 9.45%

Example 9.10 *A V-belt drive with the following data transmits power from an electric motor to a compressor:*

Power transmitted	=	*100 kW*
Speed of the electric motor	=	*750 rpm*
Speed of the compressor	=	*300 rpm*
Diameter of compressor pulley	=	*800 mm*
Centre distance between pulleys	=	*1.5 m*
Maximum speed of the belt	=	*30 m/s*
Mass density of the belt	=	*900 kg/m³*
Cross-sectional area of belt	=	*350 mm²*
Allowable stress in the belt	=	*2.2 N/mm²*
Groove angle of the pulley	=	*38°*
Coefficient of friction	=	*0.28*

Determine the number of belts required and the length of each belt.

Solution Speed of driving pulley (electric motor), $N_1 = 750$ rpm

Speed of the driven pulley, $N_2 = 300$ rpm

Thus, larger pulley is the driven pulley and $D = 800$ mm

$$\therefore \quad \frac{d}{D} = \frac{N_2}{N_1} \text{ or } \frac{d}{800} = \frac{300}{750} \text{ or } d = 320 \text{ mm or}$$
$r = 160$ mm

Mass of belt/m length = area × length × density
$= 350 \times 10^{-6} \times 1 \times 900 = 0.315$ kg

Centrifugal tension, $T_c = mv^2 = 0.315 \times 30^2$
$= 283.5$ N

Maximum tension in the belt,
$T = \sigma \times \text{area} = 2.2 \times 350 = 770$ N
$T_1 = T - T_c = 770 - 283.5 = 486.5$ N

$$\text{Now, } \theta = \pi - 2\sin^{-1}\left(\frac{R-r}{C}\right)$$

$$= \pi - 2\sin^{-}\left(\frac{400-160}{1500}\right) = \pi - 18.4°$$
$$= \pi - 0.32 = 2.82 \text{ rad}$$

Also, $\dfrac{T_1}{T_2} = e^{\mu\theta/\sin\alpha} = e^{0.28\times 2.82/\sin 19°}$

$= 11.3$ or $T_1 = 11.3T_2$

$\therefore \quad T_2 = 486.5/11.3 = 43.1$ N

$P = (T_1 - T_2)v = (486.5 - 43.1)\times 30$
$= 13300$ W or 13.3 kW

Number of belts

$$= \frac{\text{Total power transmitted}}{\text{power transmitted/belt}} = \frac{60}{13.3} = 4.51 \text{ or } \underline{5}$$

Using approximate relation for the length of the belt,

$$L_o = \pi(R+r) + \frac{(R-r)^2}{C} + 2C$$
$$= \pi(0.4+0.16) + \frac{(0.4-0.16)^2}{3} + 2\times 1.5 = \underline{4.79 \text{ m}}$$

Example 9.11 *Determine the maximum power transmitted by a V-belt drive having the included V-groove angle of 35°. The belt used is 18 mm deep with 18 mm maximum width and weighs 300 g per metre length. The angle of lap is 145° and the maximum permissible stress is 1.5 N/mm². Take coefficient of friction to be 0.2.*

Solution $m = 0.3$ kg/m; $\alpha = 35/2 = 17.5°$; $b = 18$ mm; $t = 18$ mm; $\theta = 145° = 2.53$ rad; $\mu = 0.2$;

Maximum tension in the belt $= \sigma.b.t.$
$= 1.5\times 18\times 18 = 486$ N

Under maximum power conditions,

$$T_1 = \frac{2}{3}T = \frac{2}{3}\times 486 = 324 \text{ N}$$

$T_c = T - T_1 = 486 - 324 = 162$ N

Also, $T_c = mv^2$ or $162 = 0.3\,v^2$ or $v = 23.2$ m/s

Now,

$$\frac{T_1}{T_2} = e^{\mu\theta/\sin\alpha} = e^{0.2\times 2.53/\sin 17.5°}$$

$= 5.38$ or $T_1 = 5.38\,T_2$

or $\quad T_2 = 324/5.38 = 60.2$ N

(ii) $P = (T_1 - T_2)\,v = (324 - 60.2)\times 23.2$
$= 6120$ W or 6.12 kW

Example 9.12 *The grooves on the pulleys of a multiple-rope drive have an angle of 50° and accommodate ropes of 22 mm diameter having a mass of 0.8 kg per metre length for which a safe operating tension of 1200 N has been laid down. The two pulleys are of equal size. The drive is designed for maximum power conditions. Speed of both the pulleys is 180 rpm. Assuming coefficient of friction as 0.25, determine the diameters of the pulleys and the number of ropes when the power transmitted is 150 kW.*

Solution $T = 1200$ N $\quad P = 150\,000$ W

$m = 0.8$ kg/m length $\quad \theta = 180°$ ....(two pulleys are of equal size)

$\alpha = \dfrac{50}{2} = 25° \quad \mu = 0.25$

$N_1 = N_2 = 180$ rpm

Under maximum power conditions,

$$T_1 = \frac{2}{3}T = \frac{2}{3}\times 1200 = 800 \text{ N}$$

$T_c = T - T_1 = 1200 - 800 = 400$ N

Also $T_c = mv^2$ or $400 = 0.8\,v^2$ or $v = 22.36$ m/s

or $\quad v = \dfrac{\pi D_1 N_1}{60} = 22.36$

or $\quad \dfrac{\pi\times D_1\times 180}{60} = 22.36$

$D_1 = \underline{2.37 \text{ m}}$ Also $D_2 = \underline{2.37 \text{ m}}$

$$\frac{T_1}{T_2} = e^{\mu\theta/\sin\alpha} = e^{0.25\times\frac{180\times\pi}{180}\frac{1}{\sin 25°}} = 6.41$$

$$T_2 = \frac{T_1}{6.41} = \frac{800}{6.41} = 124.8 \text{ N}$$

$P = (T_1 - T_2)\,v.n.$

$150\,000 = (800 - 124.8)\times 22.36\times n$

$n = 9.94$ say $\underline{10 \text{ ropes}}$

9.16 INITIAL TENSION

When a belt is first fitted to a pair of pulleys, an initial tension T_o is given to the belt when the system is stationary. When transmitting power, the tension on the tight side increases to T_1 and that on slack side decreases to T_2. If it is assumed that the material of the belt is perfectly elastic, i.e., the strain in the belt is proportional to stress in it and the total length of the belt remains unchanged, the tension on the tight side will increase by the same amount as the tension on the slack side decreases. If this change in the tension is δT then

tension on tight side, $T_1 = T_o + \delta T$

tension on slack side, $T_2 = T_o - \delta T$

$$\therefore \quad T_o = \frac{T_1 + T_2}{2}$$

= mean of the tight and the slack side tensions. (9.20)

Initial Tension with Centrifugal Tension

Total tension on tight side $= T_1 + T_c$

Total tension on slack side $= T_2 + T_c$

$$\therefore \quad T_o = \frac{(T_1 + T_c) + (T_2 + T_c)}{2}$$

$$= \frac{T_1 + T_2}{2} + T_c$$

or $\quad T_1 + T_2 = 2\,(T_o - T_c)$

Let $\quad \dfrac{T_1}{T_2} = e^{\mu\theta} = k$

Therefore,

$$kT_2 + T_2 = 2(T_o - T_c)$$

$$T_2 = \frac{2(T_o - T_c)}{k+1}$$

and

$$T_1 = \frac{2k(T_o - T_c)}{k+1} \qquad \text{(i)}$$

$$T_1 - T_2 = \frac{2k(T_o - T_c)}{k+1} - \frac{2(T_o - T_c)}{k+1}$$

$$= \frac{2(k-1)\,(T_o - T_c)}{k+1}$$

Power transmitted,

$$P = (T_1 - T_2).v$$

$$= \frac{2(k-1)(T_o - T_c)}{k+1} v = \frac{2(k-1)(T_o - mv^2)}{k+1} v$$

$$= \frac{2(k-1)(T_o v - mv^3)}{k+1}$$

To find the condition for maximum power transmission, differentiating this expression with respect to v and equating the same to zero, i.e.,

$$\frac{dP}{dv} = T_o - 3mv^2 = 0$$

$$T_o = 3mv^2$$

$$v = \sqrt{\frac{T_o}{3m}}$$

When the belt drive is started, $v = 0$ and Thus, $T_c = 0$,

$$T_1 = \frac{2kT_o}{k+1} \qquad \text{(ii)}$$

From (i) and (ii), it is evident that the maximum tension in the belt is more while starting the drive.

Example 9.13 *The following data relate to a rope drive:*

Power transmitted	$= 20$ *kW*
Diameter of pulley	$= 480$ *mm*
Speed	$= 80$ *rpm*
Angle of lap on smaller pulley	$= 160^o$
Number of ropes	$= 8$
Mass of rope/m length	$= 48\ G^2$ *kg*
Limiting working tension	$= 132\ G^2$ *kN*
Coefficient of friction	$= 0.3$
Angle of groove	$= 44^o$

If G is the girth of rope in m, determine the initial tension and the diameter of each rope.

Solution Power transmitted /rope = 20 000/8
= 2500 W

$$\text{Velocity of rope} = \frac{\pi DN}{60} = \frac{\pi \times 0.48 \times 80}{60}$$
$$= 2.01 \text{ m/s}$$

Now, $P = (T_1 - T_2)\, v$

or $2500 = (T_1 - T_2) \times 2.01$

or $(T_1 - T_2) = 1244$ N (i)

$$\text{Also, } \frac{T_1}{T_2} = e^{\mu\theta/\sin\alpha} = e^{0.3 \times \frac{160 \times \pi}{180} \frac{1}{\sin 22°}} = 9.359 \text{ (ii)}$$

From (i) and (ii),

$9.359\ T_2 - T_2 = 1244$

$T_2 = 148.8$ N

$T_1 = 148.8 \times 9.359 = 1392.8$ N

$$\text{Initial tension} = \frac{T_1 + T_2}{2} = \frac{1392.8 + 148.8}{2}$$
$$= 770.8 \text{ N}$$

Now, Working tension = Tension on tight side + Centrifugal tension

$= T_1 + mv^2$

$132\,000\ G^2 = 1392.8 + 48\ G^2 . (2.01)^2$

$131\,806\ G^2 = 1392.8$

$G^2 = 0.01056$

or $G = 0.1028$

Now girth (circumference) of rope

$= \pi d = 0.1028$

or $d = \underline{0.327 \text{ m}}$

Example 9.14 *2.5 kW of power is transmitted by an open-belt drive. The linear velocity of the belt is 2.5 m/s. The angle of lap on the smaller pulley is 165°. The coefficient of friction is 0.3.*

Determine the effect on power transmission in the following cases:

(i) Initial tension in the belt is increased by 8%

(ii) Initial tension in the belt is decreased by 8%

(iii) Angle of lap is increased by 8% by the use of an idler pulley, for the same speed and the tension on the tight side

(iv) Coefficient of friction is increased by 8% by suitable dressing to the friction surface of the belt

Solution $P = 2.5$ kW $\mu = 0.3$

$\theta = 165°$ $v = 2.5$ m/s

$P = (T_1 - T_2)v$

$$2500 = (T_1 - T_2) \times 2.5$$
$$T_1 - T_2 = 1000 \text{ N}$$

$$\frac{T_1}{T_2} = e^{\mu\theta} = e^{0.3\times165\pi/180} = 2.37$$

or $T_1 = 2.37T_2$

$2.37T_2 - T_2 = 1000$

or $T_2 = 729.9$ N

$T_1 = 729.9 \times 2.37 = 1729.9$ N

Initial tension,

$$T_0 = \frac{T_1 + T_2}{2} = \frac{1729.3 + 729.9}{2} = 1229.9 \text{ N}$$

(i) When initial tension is increased by 8%

$T'_0 = 1229.9 \times 1.08 = 1328.3$ N

or $\frac{T_1 + T_2}{2} = 1328.3$ or $T_1 + T_2 = 2656.6$

As μ and θ remain unchanged, $e^{\mu\theta}$ or $\frac{T_1}{T_2}$ is same.

$$2.37\,T_2 + T_2 = 2556.6$$
$$T_2 = 788.3 \text{ N}$$
$$T_1 = 1868.3 \text{ N}$$
$$P = (T_1 - T_2)v = (1868.3 - 788.3) \times 2.5 = 2700 \text{ W or } 2.7 \text{ kW}$$

$\therefore$ increase in power $= \frac{2.7 - 2.5}{2.5} = 0.08$ or 8%

(ii) When initial tension is decreased by 8%

$T'_0 = 1229.9 \times (1 - 0.08) = 1131.5$

or $\frac{T_1 + T_2}{2} = 1131.5$ or $T_1 + T_2 = 2263$

$3.37T_2 = 2263$

$T_2 = 671.5$ N

$T_1 = 1591.5$ N

$P = (1591.5 - 671.5) \times 2.5 = 2300$ W or 2.3 kW

$\therefore$ Decrease in power $= \frac{2.5 - 2.3}{2.5} = 0.08$ or 8%

(iii) $\frac{T_1}{T_2} = e^{\mu\theta}$

T_1 is the same as before whereas θ increases by 8%

$$\frac{1729.9}{T_2} = e^{0.3\times\frac{165\times1.08\times\pi}{180}} = 2.54$$

$T_2 = 680.5$ N

$P = (1729.9 - 680.5) \times 2.5 = 2624$ W or 2.624 kW

$\therefore$ Increase in power

$$= \frac{2.624 - 2.5}{2.5} = 0.0496 \text{ or } 4.96\%$$

(iv) $\frac{T_1}{T_2} = e^{\mu\theta} = e^{0.3\times1.08\times\frac{165\times\pi}{180}} = 2.54$

or $T_1 = 2.54\,T_2$

$T_1 + T_2 = 1229.9 \times 2 = 2459.8$

$T_2 = 694.9$ N

$T_1 = 694.9 \times 2.54 = 1764.9$ N

$P = (1764.9 - 694.9) \times 2.5$

$= 2675$ W or 2.675 kW

$\therefore$ Increase in power

$$= \frac{2.675 - 2.5}{2.5} = 0.07 \text{ or } 7\%$$

Example 9.15 *In a belt drive, the mass of the belt is 1 kg/m length and its speed is 6 m/s. The drive transmits 9.6 kW of power. Determine the initial tension in the belt and the strength of the belt. The coefficient of friction is 0.25 and the angle of lap is 220°.*

Solution $P = (T_1 - T_2)v$

or $9600 = (T_1 - T_2) \times 6$

or $T_1 - T_2 = 1600$ (i)

$$\frac{T_1}{T_2} = e^{\mu\theta} = e^{0.25\times\frac{220\pi}{180}} = e^{0.96} = 2.61$$

or $T_1 = 2.61\,T_2$ (ii)

From (i) and (ii),

$2.61\,T_2 - T_2 = 1600$

$T_2 = 994$ N

$T_1 = 2594$ N

Centrifugal tension $= mv^2 = 1 \times 12^2 = 144$ N

Initial tension $T_o = \frac{T_1 + T_2}{2} + T_c$

$$= \frac{2594 + 994}{2} + 144 = 1938 \text{ N}$$

Strength of the belt = Total tension on the tight side
$= T_1 + T_c$
$= 2594 + 144$
$= 2738$ N

Example 9.16 *In an open-belt drive, the diameters of the larger and the smaller pulleys are 1.2 m and 0.8 m respectively. The smaller pulley rotates at 320 rpm. The centre distance between the shafts is 4 m. When stationary, the initial tension in the belt is 2.8 kN. The mass of the belt is 1.8 kg/m and the coefficient of friction between the belt and the pulley is 0.25. Determine the power transmitted.*

Solution Let smaller pulley be the driving pulley,
$N_1 = 320$ rpm
$D = 1.2$ m; $R = 0.6$ m; $d = 0.8$ m; $r = 0.4$ m;
$C = 4$ m; $\mu = 0.25$; $m = 1.8$ kg/m; $T_o = 2800$ N

$$v = \frac{\pi d N_1}{60} = \frac{\pi \times 0.8 \times 320}{60} = 13.4 \text{ m/s}$$

Also $T_c = mv^2 = 1.8 \times 13.4^2 = 323.4$ N

Initial tension $T_o = \dfrac{T_1 + T_2}{2} + T_c$

or $2800 = \dfrac{T_1 + T_2}{2} + 323.4$ or $T_1 + T_2 = 4953$ N (i)

Now, $\theta = \pi - 2\sin^{-1}\left(\dfrac{R-r}{C}\right)$

$$= \pi - 2\sin^{-}\left(\frac{0.6-0.4}{4}\right) = \pi - 5.73° = \pi - 0.01$$
$$= 3.042 \text{ rad}$$

Also $\dfrac{T_1}{T_2} = e^{\mu\theta}$ where $\dfrac{T_1}{T_2} = e^{0.25\times3.042} = 2.14$

or $T_1/T_2 = 2.14\ T_2$ (ii)

From (i) and (ii), $T_2 = 1577$ N and $T_1 = 3376$ N

$P = (T_1 - T_2)v = (3376 - 1577) \times 13.4 = 24106$ W or 24.106 kW

Example 9.17 *The initial tension in a belt drive is found to be 600 N and the ratio of friction tensions is 1.8. The mass of the belt is 0.8 kg/m length. Determine the*

(i) velocity of the belt for maximum power transmission
(ii) tension on the tight side of the belt when it is started
(iii) tension on the tight side of the belt when running at maximum speed

Solution From equation for maximum power transmission with consideration of initial tension,

(i) $v = \sqrt{\dfrac{T_o}{3m}} = \sqrt{\dfrac{600}{3 \times 0.8}} = 15.8$ m/s

(ii) Tension on the tight side of the belt when it is started

$$T_1 = \frac{2kT_o}{k+1} = \frac{2 \times 1.8 \times 600}{1.8+1} = 771.4 \text{ N}$$

(iii) Tension on the tight side of the belt when running at maximum speed.
Centrifugal tension $= mv^2 = 0.8 \times 15.8^2$
$= 199.7$ N

Initial tension $T_o = \dfrac{T_1 + T_2}{2} + T_c$

$600 = \dfrac{T_1 + (T_1/1.8)}{2} + 199.7$

$0.778\ T_1 = 400.3$
$T_1 = 514.6$ N

It can also be found by applying the relation

$$T_1 = \frac{2k(T_o - T_c)}{k+1} = \frac{2 \times 1.8(600 - 199.7)}{1.8+1}$$
$$= 514.6 \text{ N}$$

9.17 CREEP

It is seen that when a belt moves over the driving pulley, tension in the belt decreases from T_1 to T_2.

Let l_1 = stretch in unit length of belt due to T_1

Let l_2 = stretch in unit length of belt due to T_2

Assuming that the strain in the belt is proportional to the stress in it,

As $T_1 > T_2$

Therefore, $l_1 > l_2$

Thus, a length $(1 + l_1)$ of belt approaches the driving pulley and a length $(1 + l_2)$ leaves it. As $(1 + l_1)$ is greater than $(1 + l_2)$, the belt slips back over the driving pulley. This slip is known as the *creep* of the belt.

On the driven pulley, the belt tension increases from T_2 to T_1. This means a shorter length $(1 + l_2)$ approaches the driving pulley and a greater length $(1 + l_1)$ leaves it. Thus, the belt creeps forward by an amount $(l_1 - l_2)$. This makes the driven pulley to move at a slower speed than the belt.

Thus, the effect of creep is to slow down the speed of the belt on the driving pulley than that of the rim of the pulley and to reduce the rim velocity of the driven pulley than that of the belt on it. Therefore, the net effect of creep is to reduce the speed of the driven pulley than what it would have been without creep and Thus, reducing the power transmitted.

Let σ_1 = stress on the tight side of the belt

σ_2 = stress on the slack side of the belt

ε_1 = strain on the tight side

ε_2 = strain on the slack side

N_1 = speed of the driving pulley

N_2 = speed of the driven pulley

l = original length of the belt

E = modulus of elasticity of the belt material

Assuming that the stress strain curve for the belt to be parabolic in nature,

$$\varepsilon_1 = \frac{\sqrt{\sigma_1}}{E} \quad \text{and} \quad \varepsilon_2 = \frac{\sqrt{\sigma_2}}{E}$$

Length on the tight side = $l + l.\varepsilon_1$

Length on the slack side = $l + l.\varepsilon_2$

$$\text{Velocity ratio} = \frac{V_2}{V_1} = \frac{\text{peripheral speed of driven pulley}}{\text{peripheral speed of driving pulley}}$$

The peripheral speed of a pulley is to be proportional to the approaching length of belt. Thus,

$$\frac{\pi D_2 N_2}{\pi D_1 N_1} = \frac{l + l\varepsilon_2}{l + l\varepsilon_1}$$

$$\frac{N_2}{N_1} = \frac{D_1}{D_2} \cdot \frac{1+\varepsilon_2}{1+\varepsilon_1} = \frac{D_1}{D_2} \cdot \left[\frac{E + \sqrt{\sigma_2}}{E + \sqrt{\sigma_1}}\right]$$

Example 9.18 *The driving pulley of an open belt drive is of 800 mm diameter and rotates at 320 rpm while transmitting power to a driven pulley of 250 mm diameter. The Young's modulus of elasticity of the belt material is 110 N/mm². Determine the speed lost by the driven pulley due to creep if the stresses in the tight and slack sides of the belt are found to be 0.8 N/mm² and 0.32 N/mm² respectively.*

Solution Larger pulley is the driving pulley, N_1 = 320 rpm

$\therefore D = 800$ rpm; $d = 250$ rpm

If creep is neglected, $\dfrac{N_2}{N_1} = \dfrac{D}{d}$

or $N_2 = N_1 \times \dfrac{D}{d} = 320 \times \dfrac{800}{250} = 1024$ rpm

$$\frac{N_2}{N_1} = \frac{D}{d} \cdot \left[\frac{E + \sqrt{\sigma_2}}{E + \sqrt{\sigma_1}}\right]$$

$$N_2 = 320 \times \frac{800}{250} \cdot \left[\frac{110 + \sqrt{0.32}}{110 + \sqrt{0.8}}\right]$$

$= 320 \times 3.2 \times 0.997$

$= 1021$ rpm

Speed lost = 1024 – 1021 = <u>3 rpm</u>

9.18 CHAINS

A chain is regarded in between the gear drive and the belt drive. Like gears, chains are made of metal and, therefore, occupy lesser space and give constant velocity ratios. Like belts, they are used for longer centre distances.

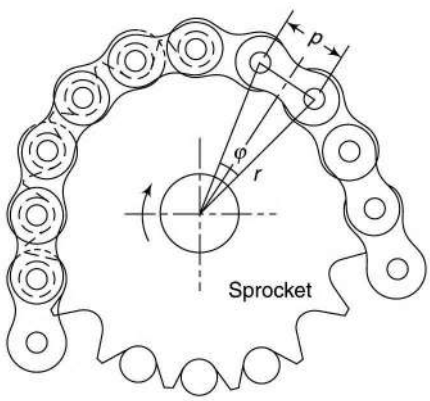

Fig. 9.17

Advantages

- Constant velocity ratio due to no slip and thus, it is a positive drive.
- No effect of overloads on the velocity ratio.
- Oil or grease on surfaces does not affect the velocity ratio.
- Chains occupy less space as these are made of metals.
- Lesser loads are put on the shafts.
- High transmission efficiency due to no slip.
- Through one chain only, motion can be transmitted to several shafts.

Disadvantages

- It is heavier as compared to the belt.
- There is a gradual stretching and increase in length of chains. From time to time some of its links have to be removed.
- Lubrication of its parts is required.
- Chains are costlier as compared to belts.

The wheels over which chains are run, corresponding to the pulleys of a belt drive,

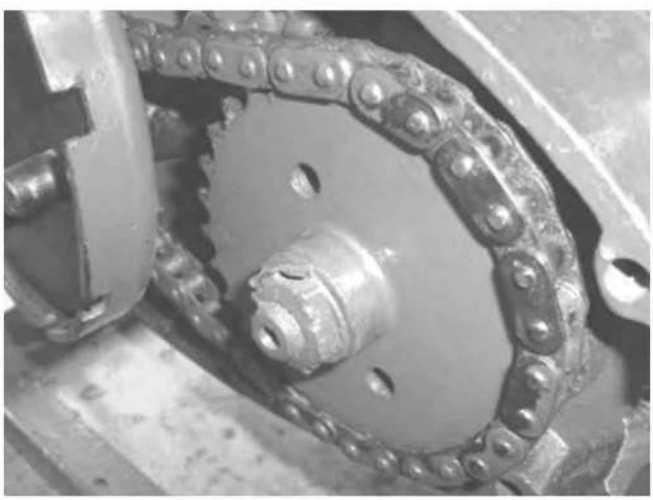

A chain drive of a machine

are known as *sprockets*. The surfaces of sprockets conform to the type of chain used. Usually, a sprocket has projected teeth that fit into the recesses in the chain. Thus, the chain passes round the sprockets as a series of chordal links (Fig. 9.17).

The distance between roller centres of two adjacent links is known as the pitch (p) of the chain. A circle through the roller centres of a wrapped chain round a sprocket is called the *pitch circle* and its diameter as *pitch circle diameter*.

Observe that a chain is wrapped round the sprocket in the form of a pitch polygon and not in the form of a pitch circle.

Let T = number of teeth on a sprocket.

φ = angle subtended by chord of a link at the centre of sprocket

r = radius of the pitch circle

Then
$$p = 2r\sin\frac{\varphi}{2} = 2r\sin\frac{1}{2}\left(\frac{360°}{T}\right) = 2r\sin\frac{180°}{T}$$

or
$$r = \frac{p}{2\sin\dfrac{180°}{T}} = \frac{p}{2}\operatorname{cosec}\frac{180°}{T} \tag{9.21}$$

9.19 CHAIN LENGTH

For a given pair of sprockets at a fixed distance apart, the length of the chain may be calculated in the same way as for an open belt. Since the pitch line of a sprocket is a polygon, Eq. 9.6 will give a length slightly more than the actual length.

Let R and r be the radii of the pitch circles of the two sprockets having T and t teeth respectively. Also,

let L = length of the chain

C = centre distance between sprockets = kp

p = pitch of chain

From Eq. (9.6),
$$L = \pi(R+r) + \frac{(R-r)^2}{C} + 2C$$

The first term in the equation is half the sum of the circumference of the pitch circles. In case of a chain it will be $(pT + pt)/2$.

Replacing R and r in the second term by
$$R = \frac{p}{2}\operatorname{cosec}\frac{180°}{T} \text{ and } r = \frac{p}{2}\operatorname{cosec}\frac{180°}{t}$$
$$L = \frac{pT+pt}{2} + \frac{\left(\dfrac{p}{2}\operatorname{cosec}\dfrac{180°}{T} - \dfrac{p}{2}\operatorname{cosec}\dfrac{180°}{t}\right)^2}{kp} + 2kp$$
$$= p\left[\frac{T+t}{2} + \frac{\left(\operatorname{cosec}\dfrac{180°}{T} - \operatorname{cosec}\dfrac{180°}{t}\right)^2}{4k} + 2k\right] \tag{9.22}$$

Note that the terms in the square bracket must be an integral number of pitch lengths. In case it is a fraction, it must be rounded off to the next integral number.

9.20 ANGULAR SPEED RATIO

The chain is wrapped round the sprocket in the form of a pitch polygon and not as a pitch circle. From Fig. 9.18, it may be observed that the axial line of the chain vibrates between two positions shown by full and dotted lines.

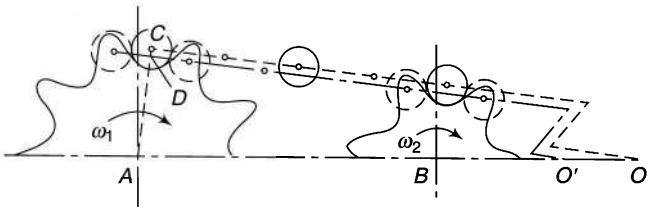

Fig. 9.18

Even if the sprocket rotates at an uniform angular velocity ω, the linear velocity of the chain will be varying from a maximum $\omega.AC$ to a minimum $\omega.AD$. Thus, the magnitude of the speed variation is the ratio of the distances AC to AD. The variation in the chain speed also causes a variation in the angular speed of the driven sprocket. However, by increasing the number of teeth on the sprocket, the magnitude of the variation in speed may be minimized.

It can be shown that at any instant, if the line of transmission cuts the line of centres at O, the angular velocities of the two sprockets will be in the inverse ratio of the distances of their centres from O, i.e.,

$$\frac{\omega_2}{\omega_{11}} = \frac{OA}{OB}$$

The variation of ω_2 will be between

$$\omega_1 \frac{OA}{OB} \text{ and } \omega_1 \frac{O'A}{O'B}$$

Thus, at any instant, the angular velocity of the driven shaft would be changing.

Example 9.19 *The center-to-centre distance between the two sprockets of a chain drive is 600 mm. The chain drive is used to reduce the speed from 180 rpm to 90 rpm on the driving sprocket has 18 teeth and a pitch circle diameter of 480 mm. Determine the*
(i) number of teeth on the driven sprocket
(ii) pitch and the length of the chain

Solution (i) $\dfrac{N_2}{N_1} = \dfrac{T_1}{T_2}$

or $T_2 = T_1 \dfrac{N_1}{N_2} = 18 \times \dfrac{180}{90} = \underline{36}$

(ii) $p = 2r \sin \dfrac{180°}{T} = 2 \times 0.24 \times \sin \dfrac{180°}{36}$

$= 0.0418$ m or $\underline{41.8 \text{ mm}}$

$k = C/p = 0.600/0.0418 = 14.342$

$$L = p\left[\frac{T+t}{2} + \frac{\left(\text{cosec}\dfrac{180°}{T} - \text{cosec}\dfrac{180°}{t}\right)^2}{4k} + 2k\right]$$

$$= 0.0418\left[\frac{36+18}{2} + \frac{\left(\text{cosec}\dfrac{180°}{36} - \text{cosec}\dfrac{180°}{18}\right)^2}{4 \times 14.342} + 2 \times 14.342\right]$$

$= 0.0418 \times (27 + 0.569 + 28.684)$

$= \underline{2.351 \text{ m}}$

9.21 CLASSIFICATION OF CHAINS

Chains have been classified into hoisting chains, conveyor chains and power-transmission chains. Each type has been discussed below:

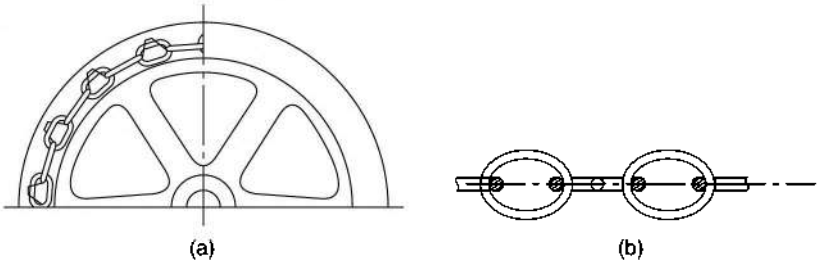

Fig. 9.19

1. Hoisting Chains

Hoisting chains include *oval-link* and *stud-link* chains. An oval-link chain is a common form of hoisting chain [Fig. 9.19(a)]. It consists of oval links and is also known as *coil chain*. Such chains are used for lower speeds only.

Figure 9.19(b) shows a stud-link chain. This does not link or tangle easily.

2. Conveyor Chains

Conveyor chains may be of detachable or *hook-joint* type [Fig. 9.20(a)], or of the *closed-end pintle* type [Fig. 9.20(b)]. The sprocket teeth are so shaped and spaced that the chain should run onto and off the sprocket smoothly and without interference. Such chains are used for low-speed agricultural machinery. The material of the links is, usually, malleable cast iron. The motion of the chain is not very smooth.

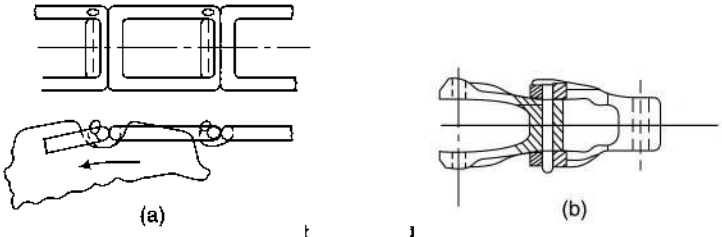

Fig. 9.20

3. Power Transmissions Chains

These chains are made of steel in which the wearing parts are hardened. They are accurately machined and run on carefully designed sprockets.

These are of three types:

(i) *Block Chain* This type of chain [Fig. 9.21(a)] is mainly used for transmission of power at low speeds. Sometimes, they are also used as conveyor chains in place of malleable conveyor chains.

(ii) *Roller Chain* A common form of a roller chain is shown in [Fig. 9.21(b)]. A bushing is fixed to the inner link whereas the outer link has a pin fixed to it. There is only sliding motion between the pin and the bushing. The roller is made of a hardened material and is free

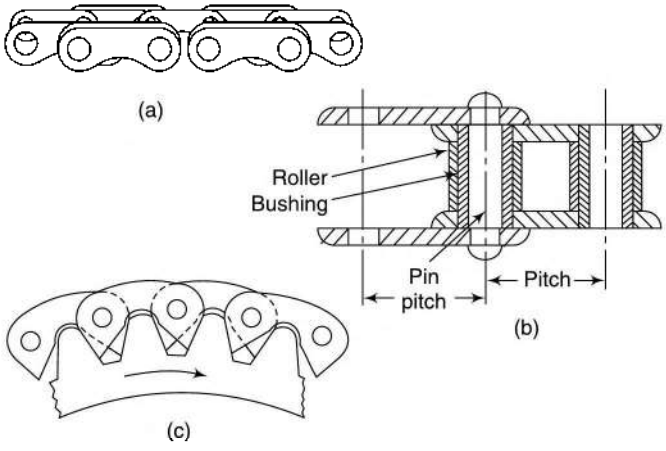

Fig. 9.21

to turn on the bushing. Figure 9.17 shows this type of chain in place on the sprocket. A good roller chain is quieter and wears less as compared to a block chain.

(iii) *Silent Chain (Inverted Tooth Chain)* Though roller chains can run quietly at fairly high speeds, the silent chains or inverted tooth chains are used where maximum quietness is desired.

Silent chains do not have rollers. The links are so shaped as to engage directly with the sprocket teeth. The included angle is either 60° or 75° [Fig. 9.21(c)].

Summary

1. Power is transmitted from one shaft to another by means of belts, ropes, chains and gears.
2. Belts, ropes and chains are used where the distance between the shafts is large. For small distances, gears are preferred.
3. Belts and ropes transmit power due to friction between them and the pulleys. If the power transmitted exceeds the force of friction, the belt or rope slips over the pulley.
4. Belts and ropes are strained during motion as tensions are developed in them.
5. Owing to slipping and straining action, belts and ropes are not positive type of drives, i.e., their velocity ratios are not constant.
6. The effect of slip is to decrease the speed of the belt on the driving shaft and to decrease the speed of the driven shaft.
7. A belt may be of rectangular section, known as a *flat belt* or of trapezoidal section, known as a *V-belt.*
8. In case of a flat belt, the rim of the pulley is slightly *crowned* which helps to keep the belt running centrally on the pulley rim.
9. The groove on the rim of the pulley of a V-belt drive is made deeper to take the advantage of the wedge action. The belt does not touch the bottom of the groove.
10. A multiple V-belt system, using more than one belt in the two pulleys, can be used to increase the power transmitting capacity.
11. An open-belt drive is used when the driven pulley is to be rotated in the same direction as the driving pulley and a crossed-belt drive when in the opposite direction.
12. While transmitting power, one side of the belt is more tightened (known as tight side) as compared to the other (known as slack side).
13. Velocity ratio is the ratio of speed of the driven pulley to that of the driving pulley.
14. Usual materials of flat belts are leather, canvas, cotton and rubber.
15. V-belts are made of rubber impregnated fabric with angle of V between 30 to 40 degrees.
16. The materials for ropes are cotton, hemp, manila or wire.
17. The main types of pulleys are *idler, intermediate* (or *countershaft*), *loose and fast and guide.*
18. *Law of belting* states that the centre line of the belt when it approaches a pulley must lie in the mid-plane of that pulley. However, a belt leaving a pulley may be drawn out of the plane of the pulley.
19. The length of belt depends only on the sum of the pulley radii and the centre distance in case of crossed-belt drive whereas it depends on the sum as well as the difference of the pulley radii apart from the centre distance in case of open-belt drive.
20. A cone pulley has different sets of pulley radii to give varying speeds of the driven shaft.
21. The ratio of belt tensions when the belt is on the point of slipping on the pulleys, $\frac{T_1}{T_2} = e^{\mu\theta}$ for flat belt drive,
    $\frac{T_1}{T_2} = e^{\mu\theta/\sin\alpha}$ for V-belt drive
22. Power transmitted is, $P = (T_1 - T_2) \times v$
23. The centrifugal force produces equal tensions on the two sides of the belt, i.e., on the tight side as well as on the slack side. It is independent of the tight and slack side tensions and depends only on the velocity of the belt over the pulley.
24. For maximum power transmission, centrifugal tension in the belt must be equal to one-third of the maximum allowable belt tension and the belt should be on the point of slipping.
25. Initial tension in the belt is given by, $T_0 = \frac{T_1 + T_2}{2}$
26. As more length of belt approaches the driving pulley than the length that leaves, the belt slips back over the driving pulley. This slip is known as *creep* of the belt.

Exercises

1. What are different modes of transmitting power from one shaft to another? Compare them.
2. Discuss the effect of slip of belt on the pulleys on the velocity ratio of a belt drive.
3. Name the materials of the flat belts, V-belts and ropes.
4. What do you mean by crowning of pulleys in flat-belt drives? What is its use?
5. What are different types of pulleys? Explain briefly.
6. Explain the following:
   (i) Idler pulleys
   (ii) Intermediate pulleys
   (iii) Loose and fast pulleys
   (iv) Guide pulleys
7. Define and elaborate the law of belting.
8. Deduce expressions for the exact and approximate lengths of belt in an open-belt drive.
9. What is meant by cross-belt drive? Find the length of belt in a cross-belt drive.
10. Where do we use cone (stepped) pulleys? Explain the procedure to design them.
11. Derive the relation for ratio of belt tensions in a flat-belt drive.
12. Derive the relation, $\frac{T_1}{T_2} = e^{\mu\theta}$ for a flat-belt drive with usual notations.
13. Deduce an expression for the ratio of tight and slack side tensions in case of a V-belt drive.
14. What is the effect of centrifugal tension on the tight and slack sides of a belt drive? Show that it is independent of the tight and slack-side tensions and depends only on the velocity of the belt over the pulley.
15. What is the effect of centrifugal tension on the power transmitted?
16. Derive the condition for maximum power transmission by a belt drive considering the effect of centrifugal tension.
17. What is meant by initial tension in a belt drive?
18. What is creep in a belt drive?
19. A motor shaft drives a main shaft of a workshop by means of a flat belt, the diameters of the pulleys being 500-mm and 800-mm respectively. Another pulley of 600 mm diameter on the main shaft drives a counter-shaft having a 750-mm diameter pulley. If the speed of the motor is 1600 rpm, find the speed of the countershaft neglecting the thickness of the belt and considering a slip of 4% on each drive.
   (737.3 rpm)
20. Two pulleys on two shafts are connected by a flat belt. The driving pulley is 250 mm in diameter and runs at 150 rpm. The speed of the driven pulley is to be 90 rpm. The belt is 120 mm wide, 5-mm thick and weighs 1000 kg/m^3. Assuming a slip of 2% between the belt and each pulley, determine the diameter of the driven pulley. Also, find the total effective slip.
   (403 mm; 3.96%)
21. The pulleys of two parallel shafts that 8 m apart are 600 mm and 800 mm in diameters and are connected by a crossed belt. It is needed to change the direction of rotation of the driven shaft by adopting the open-belt drive. Calculate the change in length of the belt.
   (Shorten the belt by 60 mm)
22. Determine the diameters of the cone pulley joined by a crossed belt. The driven shaft is desired to be run at speeds of 60, 90 and 120 rpm while the driving shaft rotates at 160 rpm. The centre distance between the axes of the two shafts is 2.5 m. The smallest pulley diameter can be taken as 150 mm.
   (150 mm and 400 mm; 198 mm and 352 mm; 236 mm and 314 mm)
23. Design a set of stepped pulleys to drive a machine from a countershaft running at 300 rpm. It is needed to have the following speeds of the driven shaft: 140 rpm, 180 rpm and 220 rpm. The centre distance between the axes of the two shafts is 5 m. The diameter of the smallest pulley is 300 mm. The two shafts rotate in the same direction.
   (300 mm and 642 mm; 354 mm and 590 mm; 400 mm and 545 mm)
24. A countershaft is to be driven at 240 rpm from a driving shaft rotating at 100 rpm by an open-belt drive. The diameter of the driving pulley is 480 mm. The distance between the centre line of shafts is 2 m. Find the width of the belt to transmit 3 kW of power if the safe permissible stress in tension is 15 N/mm width of the belt. Take $\mu = 0.3$.
   (134 mm)
25. A casting having a mass of 100 kg is suspended freely from a rope. The rope makes 2 turns round a drum of 300 mm diameter rotating at 24 rpm. The other end of the rope is pulled by a man. Calculate

the force required by the man, power to raise the casting and the power supplied by drum run by a prime-mover. Take $\mu = 0.3$.

(226 N; 3.698 kW; 3.613 kW)

26. A leather belt transmits 10 kW from a motor running at 600 rpm by an open-belt drive. The diameter of the driving pulley of the motor is 350 mm, centre distance between the pulleys is 4 m and speed of the driven pulley is 180 rpm. The belt weighs 1100 kg/m^3 and the maximum allowable tension in the belt is 2.5 N/mm^2. $\mu = 0.25$. Find the width of the belt assuming the thickness to be 10 mm. Neglect the belt thickness to calculate the velocities.

(73.8 mm)

27. Two pulleys mounted on two parallel shafts that are 2 m apart are connected by a crossed belt drive. The diameters of the two pulleys are 500 mm and 240 mm. Find the length of the belt and the angle of contact between the belt and each pulley. Also, find the power transmitted if the larger pulley rotates at 180 rpm and the maximum permissible tension in the belt is 900 N. The coefficient of friction between the belt and pulley is 0.28.

(5.23 m, 201.4°, 2.658 kW)

28. Determine the maximum power that can be transmitted through a flat belt having the following data:
X-section of the belt = 300 mm × 12 mm
Ratio of friction tensions = 2.2
Maximum permissible tension in belt = 2 N/mm^2
Mass density of the belt material = 0.0011 g/mm^3

(64.46 kW)

29. A V-belt weighting 1.6 kg/m run has an area of cross-section of 750 mm^2. The angle of lap is 165° on the smaller pulley which has a groove angle of 40°. $\mu = 0.12$. The maximum safe stress in the belt is 9.5 N/mm^2. What is the power that can be transmitted by the belt at a speed of 20 m/s?

(82.485 kW)

30. A leather belt transmits 8 kW of power from a pulley that is 1.1 m in diameter running at 200 rpm. The angle of lap is 160° and the coefficient of friction between belt and pulley is 0.25. The maximum safe working stress in the belt is 2.2 N/mm^2. The thickness of the belt is 8 mm and the density of leather is 0.001 g/mm^3. Find the width of the belt taking centrifugal tension into account.

(78.6 mm)

31. A rope drive transmits 40 kW at 120 rpm by using 15 ropes. The angle of lap on the smaller pulley which is 300 mm in diameter is 165°. Coefficient of friction is 0.25 and the angle of groove is 40°. The rope weighs $(50 \times 10^{-6})\, G^2$ kg per metre length of rope and the working tension is limited to $0.14\, G^2$ N where G is the girth (circumference) of rope in mm. Determine the initial tension and the diameter of each rope.

(903.8 N; 34.2 mm)

32. The smaller pulley of a flat belt drive has a radius of 220 mm and rotates at 480 rpm. The angle of lap is 155°. The initial tension in the belt is 1.8 kN and the coefficient of friction between the belt and the pulley is 0.3. Determine the power transmitted by the belt.

(15.3 kW)

33. A rope drive uses ropes weighing 1.6 kg/m length. The diameter of the pulley is 3.2 m and has 12 grooves of 40° angle. The coefficient of friction between the ropes and the groove sides is 0.3 and the angle of contact is 165°. The permissible tension in the ropes is 870 N. Determine the speed of the pulley and the power transmitted.

(80.3 rpm, 86.18 kW)

34. A man wants to lower an engine weighting 380 kg from a trolley to the ground by using a rope which he passes over a fixed horizontal pipe overhead. The man is capable of controlling the motion with a force of 200 N or less on the free end of the rope. Find the minimum number of times the rope must be passed round the pipe if $\mu = 0.22$.

(2.1 turns)

35. A chain drive is used for speed reduction from 240 rpm to 110 rpm. The number of teeth on the driving sprocket is 22. The centre to centre distance between two sprockets is 540 mm and the pitch circle diameter of the driven sprocket is 480 mm. Determine the number of teeth on the driven sprocket, pitch and the length of the chain.

(48, 31.4 mm, 2.21 m)

10 GEARS

Introduction

Gears are used to transmit motion from one shaft to another or between a shaft and a slide. This is accomplished by successively engaging teeth.

Gears use no intermediate link or connector and transmit the motion by direct contact. In this method, the surfaces of two bodies make a tangential contact. The two bodies have either a rolling or a sliding motion along the tangent at the point of contact. No motion is possible along the common normal as that will either break the contact or one body will tend to penetrate into the other.

If power transmitted between two shafts is small, motion between them may be obtained by using two plain cylinders or discs 1 and 2 as shown in Fig. 10.1. If there is no slip of one surface relative to the other, a definite motion of 1 can be transmitted to 2 and vice-versa. Such wheels are termed as *friction wheels*. However, as the power transmitted increases, slip occurs between the discs and the motion no longer remains definite.

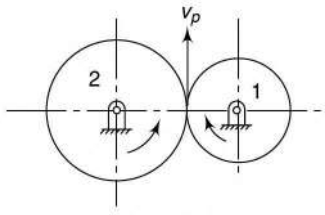

Fig. 10.1

Assuming no slipping of the two surfaces, the following kinematic relationship exists for their linear velocity:

$$v_p = \omega_1 r_1 = \omega_2 r_2$$
$$= 2\pi N_1 r_1 = 2\pi N_2 r_2$$

or
$$\frac{\omega_1}{\omega_2} = \frac{N_1}{N_2} = \frac{r_2}{r_1} \tag{10.1}$$

where N = angular velocity (rpm)
ω = angular velocity (rad/s)
r = radius of the disc

Subscripts 1 and 2 represent discs 1 and 2 respectively.

The relationship shows that the speeds of the two discs rolling together without slipping are inversely proportional to the radii of the discs.

To transmit a definite motion of one disc to the other or to prevent slip between the surfaces, projections and recesses on the two discs can be made which can mesh with each other. This leads to the formation of teeth on the discs and the motion between the surfaces changes from rolling to sliding. The discs with teeth are known as *gears* or *gear wheels*.

It is to be noted that if the disc 1 rotates in the clockwise direction, 2 rotates in the counter-clockwise direction and vice-versa.

Although large velocity ratios of the driving and the driven members have been obtained by the use of gears, practically, it is limited to 6 for spur gears and 10 for helical and herringbone gears. To obtain large reductions, two or more pairs of gears are used.

10.1 CLASSIFICATION OF GEARS

Gears can be classified according to the relative positions of their shaft axes as follows:

1. Parallel Shafts

Regardless of the manner of contact, uniform rotary motion between two parallel shafts is equivalent to the rolling of two cylinders, assuming no slipping. Depending upon the teeth of the equivalent cylinders, i.e., straight or helical, the following are the main types of gears to join parallel shafts:

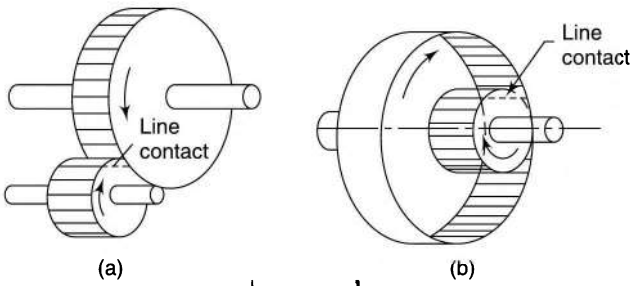

Fig. 10.2

Spur Gears They have straight teeth parallel to the axes and thus are not subjected to axial thrust due to tooth load [Fig. 10.2(a)].

At the time of engagement of the two gears, the contact extends across the entire width on a line parallel to the axes of rotation. This results in sudden application of the load, high impact stresses and excessive noise at high speeds.

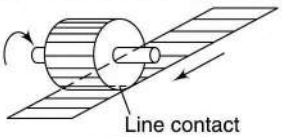

Fig. 10.3

Further, if the gears have external teeth on the outer surface of the cylinders, the shafts rotate in the opposite direction [Fig. 10.2(a)]. In an internal spur gear, the teeth are formed on the inner surface of an annulus ring. An internal gear can mesh with an external pinion (smaller gear) only and the two shafts rotate in the same direction as shown in [Fig. 10.2(b)].

Spur Rack and Pinion Spur rack is a special case of a spur gear where it is made of infinite diameter so that the pitch surface is a plane (Fig. 10.3). The spur rack and pinion combination converts rotary motion into translatory motion, or vice-versa. It is used in a lathe in which the rack transmits motion to the saddle.

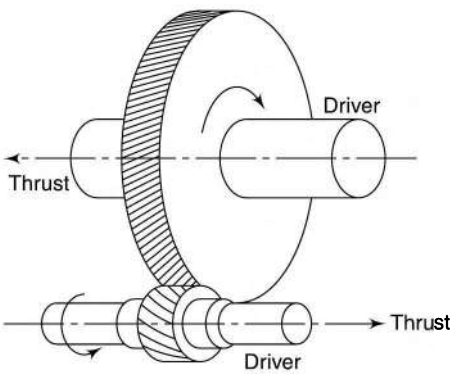

Fig. 10.4

Helical Gears or Helical Spur Gears In helical gears, the teeth are curved, each being helical in shape. Two mating gears have the same helix angle, but have teeth of opposite hands (Fig. 10.4).

At the beginning of engagement, contact occurs only at the point of leading edge of the curved teeth. As the gears rotate, the contact extends along a diagonal line across the teeth. Thus, the load application is gradual which results in low impact stresses and reduction in noise. Therefore, the helical gears can be used at higher velocities than the spur gears and have greater load-carrying capacity.

Helical gears have the disadvantage of having end thrust as there is a force component along the gear axis. The bearings and the assemblies mounting the helical gears must be able to withstand thrust loads.

Double-helical and Herringbone Gears A *double-helical* gear is equivalent to a pair of helical gears secured together, one having a right-hand helix and the other a left-hand helix. The teeth of the two rows are separated by a groove used for tool run out. Axial thrust which occurs in case of single-helical gears is

eliminated in double-helical gears. This is because the axial thrusts of the two rows of teeth cancel each other out. These can be run at high speeds with less noise and vibrations.

If the left and the right inclinations of a double-helical gear meet at a common apex and there is no groove in between, the gear is known as *herringbone* gear (Fig. 10.5).

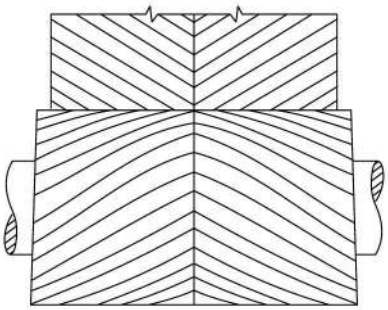

Fig. 10.5

2. Intersecting Shafts

Kinematically, the motion between two intersecting shafts is equivalent to the rolling of two cones, assuming no slipping. The gears, in general, are known as *bevel* gears.

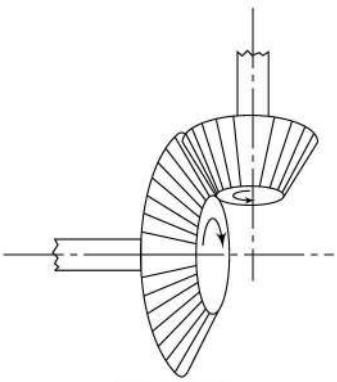

Fig. 10.6

When teeth formed on the cones are straight, the gears are known as *straight bevel* and when inclined, they are known as *spiral* or *helical bevel*.

Straight Bevel Gears The teeth are straight, radial to the point of intersection of the shaft axes and vary in cross section throughout their length. Usually, they are used to connect shafts at right angles which run at low speeds (Fig. 10.6). Gears of the same size and connecting two shafts at right angles to each other are known as *mitre* gears.

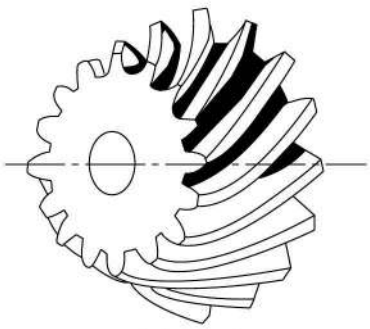

Fig. 10.7

At the beginning of engagement, straight bevel gears make the line contact similar to spur gears. There can also be *internal bevel* gears analogous to internal spur gears.

Spiral Bevel Gears When the teeth of a bevel gear are inclined at an angle to the face of the bevel, they are known as *spiral bevels* or *helical bevels* (Fig. 10.7). They are smoother in action and quieter than straight tooth bevels as there is gradual load application and low impact stresses. Of course, there exists an axial thrust calling for stronger bearings and supporting assemblies.

These are used for the drive to the differential of an automobile.

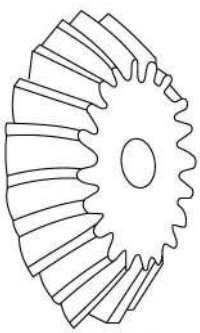

Fig. 10.8

Zerol Bevel Gears Spiral bevel gears with curved teeth but with a zero degree spiral angle are known as zerol bevel gears (Fig. 10.8). Their tooth action and the end thrust are the same as that of straight bevel gears and, therefore, can be used in the same mountings. However, they are quieter in action than the straight bevel type as the teeth are curved.

3. Skew Shafts

In case of parallel and intersecting shafts, a uniform rotary motion is possible by pure rolling contact. But in case of skew (non-parallel, non-intersecting) shafts, this is not possible.

Observe a hyperboloid shown in Fig. 10.9(a). It is a surface of revolution generated by a skew line *AB* revolving around an axis *O-O* in another plane, keeping the angle ψ_1 between them as constant. The minimum

distance between *AB* and *O-O* is the common perpendicular *CD* which is also the radius of the gorge or throat of the hyperboloid.

As the generating element of a hyperboloid is a straight line, two hyperboloids can contact each other on a line common to their respective generating element, e.g., *AB* can be the generating element of the two hyperboloids [Fig. 10.9(b)]. Further, if the two mating hyperboloids are of limited width and have the rolling motion only, then contact length of their generators will go on diminishing and soon the two could be separated. In other words, if it is desired that the two hyperboloids touch each other on the entire length of *AB* as they roll, they must have some sliding motion parallel to the line of contact. Thus, if the two hyperboloids rotate on their respective axes, the motion between them would be a combination of rolling (normal to the line of contact) and sliding action (parallel to the line of contact). Teeth are cut on the hyperboloid surfaces parallel to the line of contact to form gears.

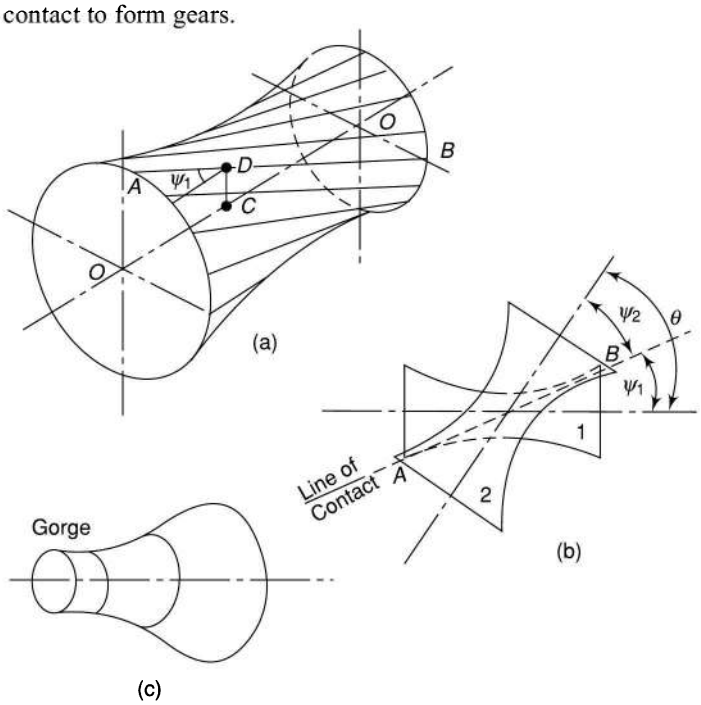

Fig. 10.9

Angle between the two shafts will be equal to the sum of the angles of generation of the two hyperboloids.

$$\theta = \psi_1 + \psi_2 \tag{10.2}$$

The minimum perpendicular distance between the two shafts is the sum of the gorge (throat) radii.

In practice, due to manufacturing difficulties, only portions of the hyperboloids are used to transmit motion between the skew shafts and that too with approximations as given below:

1. A short segment at the gorge is approximated to a cylinder and the corresponding gear is known as *helical* or *crossed-helical* or *spiral* gear [Fig. 10.9(c)]. The contact between the two gears is concentrated at a point which limits the capacity.

   For skew shafts with a 90° angle between them where high-speed ratios are to be achieved, the helix angle of the pinion (small gear) increases. When the angle exceeds 60°–65° and the number of teeth is less than 3–4, the high-speed pinion is known as *worm* and the mating helical gear as the *gear*.

2. Gears using an end portion of the hyperboloid are known as *hypoid* gears.
   Thus, the main types of gears used for skew shafts are the following:

Crossed helical Gears The use of crossed-helical gears or spiral gears is limited to light loads. By a suitable choice of helix angle for the mating gears, the two shafts can be set at any angle (Fig. 10.10).

These gears are used to drive feed mechanisms on machine tools, camshafts and oil pumps on small IC engines, etc.

Worm Gears Worm gear is a special case of a spiral gear in which the larger wheel, usually, has a hollow or concave shape such that a portion of the pitch diameter of the other gear is enveloped on it. The smaller of the two wheels is called the worm which also has a large spiral angle.

The shafts may have any angle between them, but normally it is 90°. At least, one tooth of the worm must make a complete turn around the pitch cylinder and thus forms the screw thread. The sliding velocity of a worm gear is higher as compared to other types of gears.

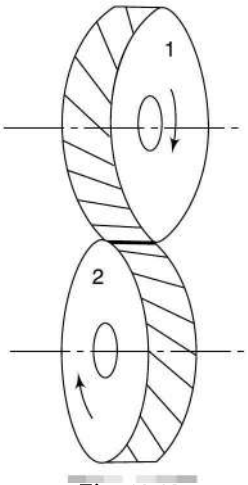

Fig. 10.10

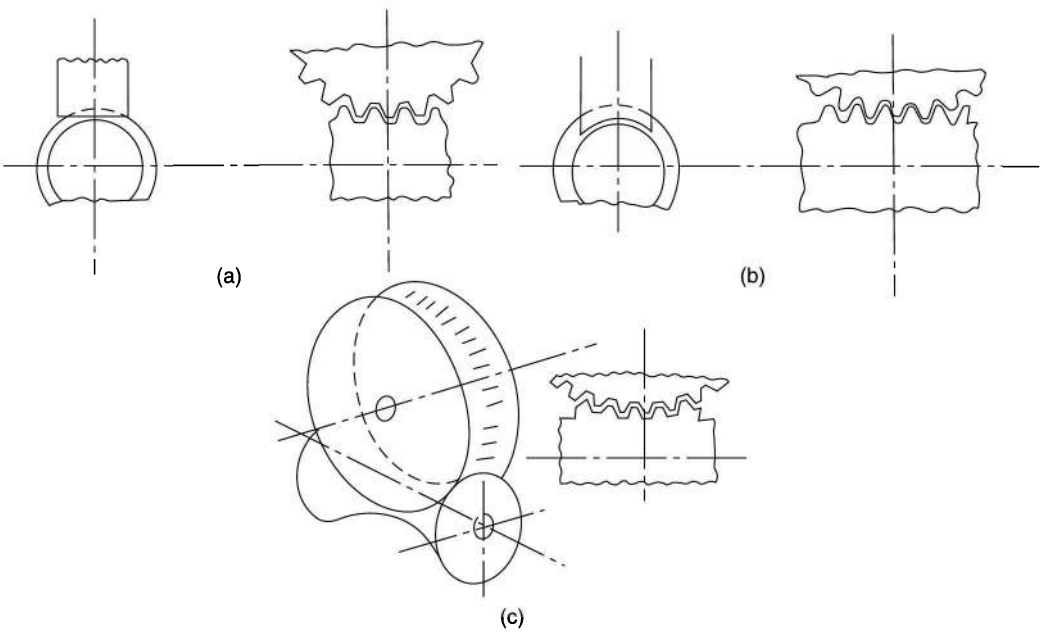

Fig. 10.11

Worm gears are made in the following forms:

1. *Non-throated (Fig. 10.11a)* The contact between the teeth is concentrated at a point.
2. *Single-throated (Fig. 10.11b)* Gear teeth are curved to envelop the worm. There is line contact between the teeth.
3. *Double-throated (Fig. 10.11c)* There is area contact between the teeth. A worm may be cut with a single- or a multiple-thread cutter.

Hypoid Gears As mentioned earlier, hypoid gears are approximations of hyperboloids though they look like spiral gears [Fig. 10.12(a)]. A hypoid pinion is larger and stronger than a spiral bevel pinion. A hypoid pair has a quiet and smooth action. Moreover, the shafts can pass each other so that bearings can be used on both sides of the gear and the pinion [Fig. 10.12(b)].

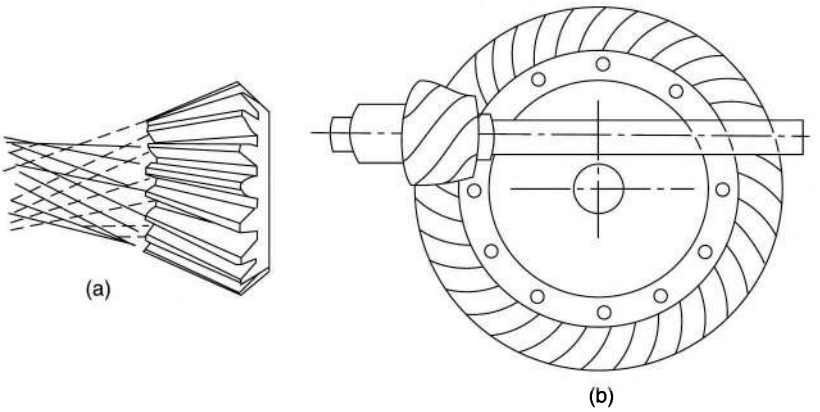

Fig. 10.12

There is continuous pitch line contact of the two mating hypoid gears while in action and they have larger number of teeth in contact than straight-tooth bevel gears. These can wear well if properly lubricated.

10.2 GEAR TERMINOLOGY

Various terms used in the study of gears have been explained below:

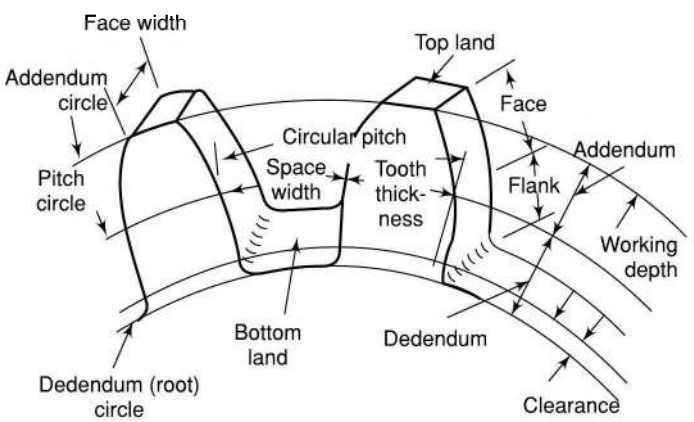

Fig. 10.13

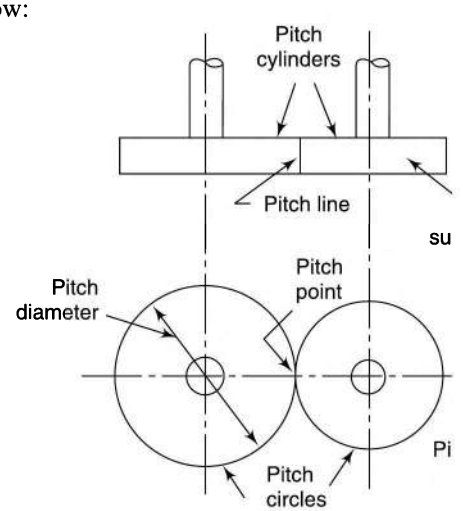

Fig. 10.14

1. Refer Figs 10.13 and 10.14.

   (a) *Pitch Cylinders* Pitch cylinders of a pair of gears in mesh are the imaginary friction cylinders, which by pure rolling together, transmit the same motion as the pair of gears.

   (b) *Pitch Circle* It is the circle corresponding to a section of the equivalent pitch cylinder by a plane normal to the wheel axis.

(c) *Pitch Diameter* It is the diameter of the pitch cylinder.

(d) *Pitch Surface* It is the surface of the pitch cylinder.

(e) *Pitch Point* The point of contact of two pitch circles is known as the pitch point.

(f) *Line of Centres* A line through the centres of rotation of a pair of mating gears is the line of centres.

(g) *Pinion* It is the smaller and usually the driving gear of a pair of mated gears.

2. (a) *Rack* It is a part of a gear wheel of infinite diameter (Fig. 10.15).

   (b) *Pitch Line* It is a part of the pitch circle of a rack and is a straight line (Fig. 10.15).

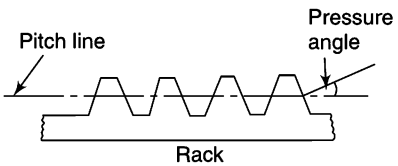

Fig. 10.15

3. *Pitch* It is defined as follows:

   (a) *Circular Pitch (p)* It is the distance measured along the circumference of the pitch circle from a point on one tooth to the corresponding point on the adjacent tooth (Fig. 10.13).

$$p = \frac{\pi d}{T}$$

where p = circular pitch
d = pitch diameter
T = number of teeth

As the expression for p involves π, an indeterminate number, p, cannot be expressed precisely. The angle subtended by the circular pitch at the centre of the pitch circle is known as the *pitch angle* (y).

   (b) *Diametral Pitch (P)* It is the number of teeth per unit length of the pitch circle diameter in inches.

$$P = \frac{T}{d}$$

The limitations of the diametral pitch is that it is not in terms of units of length, but in terms of teeth per unit length.
Also, it can be seen that

$$pP = \frac{\pi d}{T}\frac{T}{d} = \pi$$

The term *diametral pitch* is not used in SI units.

   (c) *Module (m)* It is the ratio of the pitch diameter in mm to the number of teeth. The term is used in SI units in place of diametral pitch.

$$m = \frac{d}{T}$$

Also,

$$p = \frac{\pi d}{T} = \pi m$$

Pitch of two mating gears must be same.

4. (a) *Gear Ratio (G)* It is the ratio of the number of teeth on the gear to that on the pinion.

$$G = \frac{T}{t}$$

where T = number of teeth on the gear

t = number of teeth on the pinion.

(b) *Velocity Ratio (VR)* The velocity ratio is defined as the ratio of the angular velocity of the follower to the angular velocity of the driving gear.

Let d = pitch diameter

T = number of teeth

ω = angular velocity (rad/s)

N = angular velocity (rpm)

Subscript 1 =driver

2 = follower

$$\text{VR} = \frac{\text{angular velocity of follower}}{\text{angular velocity of driver}}$$

$$= \frac{\omega_2}{\omega_1}$$

$$= \frac{N_2}{N_1} \qquad (\omega = 2\,\pi N)$$

$$= \frac{d_1}{d_2} \qquad (\because\ \pi d_1 N_1 = \pi d_2 N_2)$$

$$= \frac{T_1}{T_2} \qquad \left(p = \frac{\pi d_1}{T_1} = \frac{\pi d_2}{T_2}\right) \qquad (10.3)$$

5. Refer to Fig. 10.13.

(i) (a) *Addendum Circle* It is a circle passing through the tips of teeth.

(b) *Addendum* It is the radial height of a tooth above the pitch circle. Its standard value is one module.

(c) *Dedendum* or *Root Circle* It is a circle passing through the roots of the teeth.

(d) *Dedendum* It is the radial depth of a tooth below the pitch circle. Its standard value is $1.157\,m$.

(e) *Clearance* Radial difference between the addendum and the dedendum of a tooth. Thus,

Addendum circle diameter = $d + 2m$

Dedendum circle diameter = $d - 2 \times 1.157\,m$

Clearance = $1.157\,m - m$

$= 0.157m$

(ii) (a) *Full Depth of Teeth* It is the total radial depth of the tooth space.

Full depth = Addendum + Dedendum

(b) *Working Depth of Teeth* The maximum depth to which a tooth penetrates into the tooth space of the mating gear is the working depth of teeth.

Working depth = Sum of addendums of the two gears.

(c) *Space Width* It is the width of the tooth space along the pitch circle.

(d) *Tooth Thickness* It is the thickness of the tooth measured along the pitch circle.

(e) *Backlash* It is the difference between the space width and the tooth thickness along the pitch circle. Backlash = Space width –Tooth thickness

(f) *Face Width* The length of the tooth parallel to the gear axis is the face width.

(iii) (a) *Top Land* It is the surface of the top of the tooth.

(b) *Bottom Land* The surface of the bottom of the tooth between the adjacent fillets.

(c) *Face* Tooth surface between the pitch circle and the top land.

(d) *Flank* Tooth surface between the pitch circle and the bottom land including fillet.

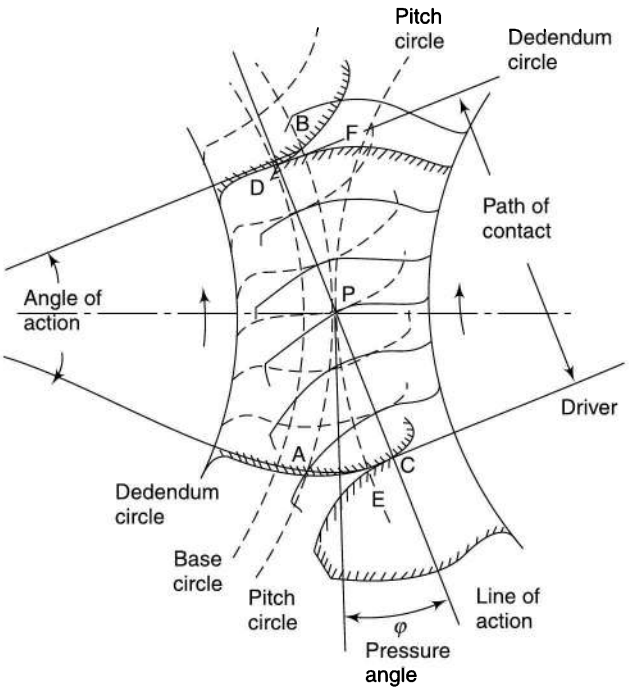

Fig. 10.16

(e) *Fillet* It is the curved portion of the tooth flank at the root circle.

6. Refer Fig. 10.16

(i) (a) *Line of Action or Pressure Line* The force, which the driving tooth exerts on the driven tooth, is along a line from the pitch point to the point of contact of the two teeth. This line is also the common normal at the point of contact of the mating gears and is known as the line of action or the pressure line.

(b) *Pressure Angle or Angle of Obliquity (φ)* The angle between the pressure line and the common tangent to the pitch circles is known as the pressure angle or the angle of obliquity.
For more power transmission and lesser pressure on the bearings, the pressure angle must be kept small. Standard pressure angles are 20° and 25°. Gears with 14.5° pressure angles have become almost obsolete.

(ii) (a) *Path of Contact or Contact Length* The locus of the point of contact of two mating teeth from the beginning of engagement to the end of engagement is known as the path of contact or the contact length. It is *CD* in the figure. The pitch point *P* is always one point on the path of contact. It can be subdivided as follows:

Path of Approach Portion of the path of contact from the beginning of engagement to the pitch point, i.e., the length *CP*.

Path of Recess Portion of the path of contact from the pitch point to the end of engagement, i.e., length *PD*.

(b) *Arc of Contact* The locus of a point on the pitch circle from the beginning to the end of engagement of two mating gears is known as the arc of contact. In Fig. 10.16, *APB* or *EPF* is the arc of contact.

It has also been divided into sub-portions.

Arc of Approach It is the portion of the arc of contact from the beginning of engagement to the pitch point, i.e., length *AP* or *EP*.

Arc of Recess The portion of the arc of contact from the pitch point to the end of engagement is the arc of recess, i.e., length *PB* or *PF*.

(c) *Angle of Action (δ)* It is the angle turned by a gear from the beginning of engagement to the end of engagement of a pair of teeth, i.e., the angle turned by arcs of contact of respective gear wheels.

Similarly, the angle of approach (α) and angle of recess (β) can be defined.

$$\delta = \alpha + \beta$$

The angle will have different values for the driving and the driven gears.

7. *Contact Ratio* It is the angle of action divided by the pitch angle, i.e.,

$$\text{Contact ratio} = \frac{\delta}{\gamma} = \frac{\alpha + \beta}{\gamma}$$

As the angle of action is the angle subtended by arc of contact and the pitch angle is the angle subtended by the circular pitch at the centre of the pitch circle, contact ratio is also the ratio of the arc of contact to the circular pitch, i.e.,

$$\text{Contact ratio} = \frac{\text{Arc of contact}}{\text{Circular pitch}}$$

Example 10.1 *Two spur gears have a velocity ratio of 1/3. The driven gear has 72 teeth of 8 mm module and rotates at 300 rpm. Calculate the number of teeth and the speed of the driver. What will be the pitch line velocities?*

Solution $T_2 = 72$; $VR = 1/3$; $N_2 = 300$ rpm; $m = 8$ mm

(i) $VR = \dfrac{N_2}{N_1} = \dfrac{T_1}{T_2} = \dfrac{1}{3}$ or $\dfrac{300}{N_1} = \dfrac{1}{3}$

or $N_1 = 900$ rpm

Also $\dfrac{T_1}{72} = \dfrac{1}{3}$ or $T_1 = 24$

(ii) Pitch line velocity, $v_p = \omega_1 r_1$ or $\omega_2 r_2$

$$= 2\pi N_1 \times \frac{d_1}{2} \text{ or } 2\pi N_2 \times \frac{d_2}{2}$$

$$= 2\pi N_1 \times \frac{mT_1}{2} \text{ or } 2\pi N_2 \times \frac{mT_2}{2}$$

$$= 2\pi \times 900 \times \frac{8 \times 24}{2} \text{ or } 2\pi \times 300 \times \frac{8 \times 72}{2}$$

= 542 867 mm/minute

= 9047.8 mm/s or 9.0478 m/s

Example 10.2 *The number of teeth of a spur gear is 30 and it rotates at 200 rpm. What will be its circular pitch and the pitch line velocity if it has a module of 2 mm?*

Solution $T = 30$; $m = 2$ mm; $N = 200$ rpm

$p = \pi m = \pi \times 2 = \underline{6.28 \text{ mm}}$

$$v_p = \omega r = 2\pi N \times \frac{d}{2} = 2\pi N \times \frac{mT}{2}$$

$= \pi \times 200 \times 2 \times 30$

= 37699 mm / min = 628.3 mm/s

10.3 LAW OF GEARING

The law of gearing states the condition which must be fulfilled by the gear tooth profiles to maintain a constant angular velocity ratio between two gears. Figure 10.17 shows two bodies 1 and 2 representing a portion of the two gears in mesh.

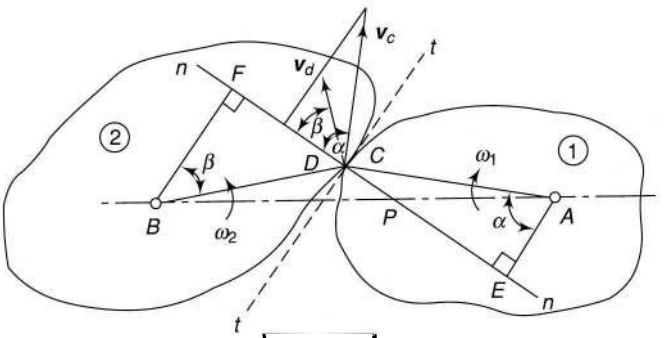

Fig. 10.17

A point C on the tooth profile of the gear 1 is in contact with a point D on the tooth profile of the gear 2. The two curves in contact at points C or D must have a common normal at the point. Let it be $n - n$.

Let ω_1 = instantaneous angular velocity of the gear 1 (clockwise)

ω_2 = instantaneous angular velocity of the gear 2 (counter-clockwise)

v_c = linear velocity of C

v_d = linear velocity of D

Then $v_c = \omega_1.AC$ in a direction perpendicular to AC or at an angle α to $n - n$.

$v_c = \omega_2.BD$ in a direction perpendicular to BD or at an angle β to $n - n$.

Now, if the curved surfaces of the teeth of two gears are to remain in contact, one surface may slide relative to the other along the common tangent $t - t$. The relative motion between the surfaces along the common normal $n - n$ must be zero to avoid the separation, or the penetration of the two teeth into each other.

Component of v_c along $n - n = v_c \cos\alpha$

Component of v_d along $n - n = v_d \cos\beta$

Relative motion along $n - n = v_c \cos\alpha - v_d \cos\beta$

Draw perpendiculars AE and BF on $n - n$ from points A and B respectively. Then $\angle CAE = \alpha$ and $\angle DBF = \beta$. For proper contact,

$$v_c \cos\alpha - v_d \cos\beta = 0$$

or $$\omega_1 AC \cos\alpha - \omega_2 BD \cos\beta = 0$$

or $$\omega_1 AC \frac{AE}{AC} - \omega_2 BD \frac{BF}{BD} = 0$$

or $$\omega_1 AE - \omega_2 BF = 0$$

or $$\frac{\omega_1}{\omega_2} = \frac{BF}{AE}$$

$$= \frac{BP}{AP}$$

[$\because$ ΔAEP and BEP are similar]

Thus, it is seen that the centre line AB is divided at P by the common normal in the inverse ratio of the angular velocities of the two gears. If it is desired that the angular velocities of two gears remain constant, the common normal at the point of contact of the two teeth should always pass through a fixed point P which divides the line of centres in the inverse ratio of angular velocities of two gears.

As seen earlier, P is also the point of contact of two pitch circles which divides the line of centres in the inverse ratio of the angular velocities of the two circles and is the pitch point.

Thus, for constant angular velocity ratio of the two gears, the common normal at the point of contact of the two mating teeth must pass through the pitch point.

Also, as the Δs AEP and BFP are similar,

$$\frac{BP}{AP} = \frac{FP}{EP}$$

or

$$\frac{\omega_1}{\omega_2} = \frac{FP}{EP} \quad \text{or} \quad \omega_1 EP = \omega_2 FP \tag{10.4}$$

10.4 VELOCITY OF SLIDING

If the curved surfaces of the two teeth of the gears 1 and 2 are to remain in contact, one can have a sliding motion relative to the other along the common tangent $t - t$ at C or D (Fig. 10.17).

Component of v_c along $t - t = v_c \sin\alpha$

Component of v_d along $t - t = v_d \sin\alpha$

Velocity of sliding $= v_c \sin\alpha - v_d \sin\beta$

$$= \omega_1 AC \frac{EC}{AC} - \omega_2 BD \frac{FD}{BD}$$

$$= \omega_1 EC - \omega_2 FD$$

$$= \omega_1 (EP + PC) - \omega_2 (FP - PD)$$

$$= \omega_1 EP + \omega_1 PC - \omega_2 FP + \omega_2 PC$$

(C and D are the coinciding points)

$$= (\omega_1 + \omega_2)\, PC + \omega_1 EP - \omega_2 FP$$

$$= (\omega_1 + \omega_2)\, PC \qquad [\omega_1 EP = \omega_2 FP, \text{ Eq. (10.4)}]$$

= sum of angular velocities × distance between the pitch point and the point of contact

10.5 FORMS OF TEETH

Two curves of any shape that fulfill the law of gearing can be used as the profiles of teeth. In other words, an arbitrary shape of one of the mating teeth can be taken and applying the law of gearing the shape of the other can be determined. Such gear are said to have *conjugate* teeth. However, it will be very difficult to manufacture such gears and the cost will be high. Moreover, on wearing, it will be very difficult to replace them with the available gears. Thus, there arises the need to standardize gear teeth.

Common forms of teeth that also satisfy the law of gearing are

1. Cycloidal profile teeth
2. Involute profile teeth

10.6 CYCLOIDAL PROFILE TEETH

In this type, the faces of the teeth are epicycloids and the flanks are the hypocycloids.

A *cycloid* is the locus of a point on the circumference of a circle that rolls without slipping on a fixed straight line.

An *epicycloid* is the locus of a point on the circumference of a circle that rolls without slipping on the circumference of another circle.

A *hypocycloid* is the locus of a point on the circumference of a circle that rolls without slipping inside the circumference of another circle.

The formation of a cycloidal tooth has been shown in Fig. 10.18. A circle H rolls inside another circle APB (pitch circle). At the start, the point of contact of the two circles is at A. As the circle H rolls inside the pitch circle, the locus of the point A on the circle H traces the path ALP which is a hypocycloid. A small portion of this curve near the pitch circle is used for the flank of the tooth.

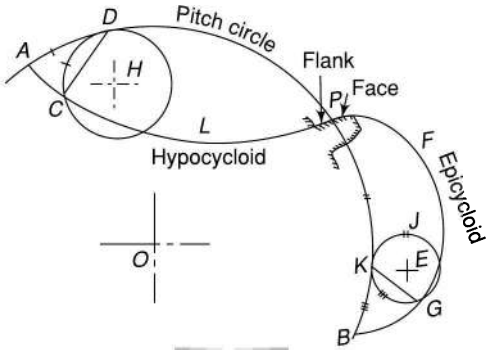

Fig. 10.18

A property of the hypocycloid is that at any instant, the line joining the generating point (A) with the point of contact of the two circles is normal to the hypocycloid, e.g., when the circle H touches the pitch circle at D, the point A is at C and CD is normal to the hypocycloid ALP.

Also, Arc AD = Arc CD (on circle H)

In the same way, if the circle E rolls outside the pitch circle, starting from P, an epicycloid PFB is obtained. Similar to the property of a hypocycloid, the line joining the generating point with the point of contact of the two circles is a normal to the epicycloid, e.g., when the circle E touches the pitch circle at K, the point P is at G and GK is normal to the epicycloid PFB.

Arc PK = Arc KJG (on circle E)

or Arc BK = Arc KG (on circle E)

A small portion of the curve near the pitch circle is used for the face of the tooth.

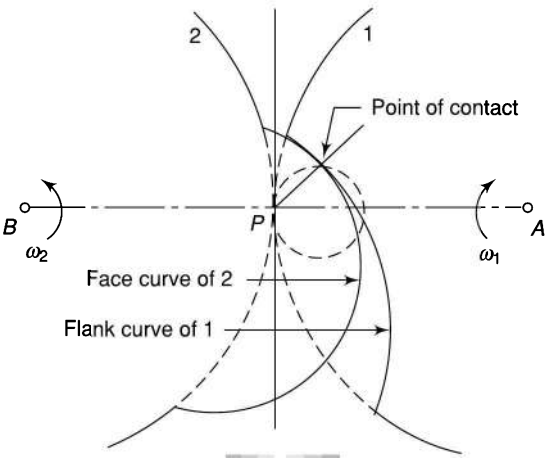

Fig. 10.19

Meshing of Teeth

During meshing of teeth, the face of a tooth on one gear is to mesh with the flank of another tooth on the other gear. Thus, for proper meshing, it is necessary that the diameter of the circle generating face of a tooth (on one gear) is the same as the diameter of the circle generating flank of the meshing tooth (on another gear); the pitch circle being the same in the two cases (Fig. 10.19).

Of course, the face and the flank of a tooth of a gear can be generated by two circles of different diameters. However, for interchangeability, the faces and flanks of both the teeth in the mesh are generated by the circles of the same diameter.

Consider a generating circle G rolling outside the pitch circle of the gear 2 (Fig. 10.20). It will generate

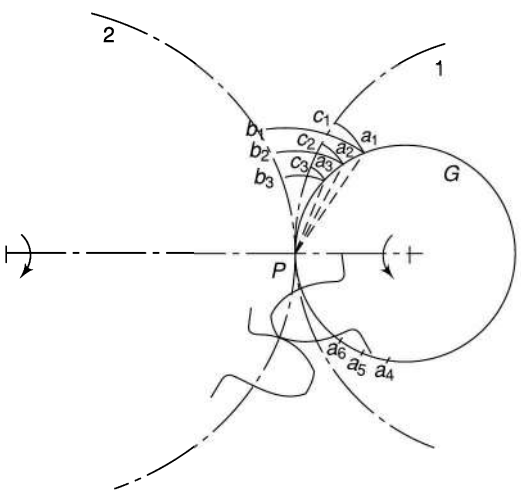

Fig. 10.20

epicycloid, a portion of which is the face of tooth on the gear. Now this face is to mesh with the flank of a tooth on the gear 1. This flank will be a portion of the hypocycloid which can be generated by rolling the same generating circle G inside the pitch circle of the gear 1.

a_1 is the generating point for the two curves a_1b_1 (epicycloid) and a_1c_1 (hypocycloid). a_1b_1 is generated when the circle G moves in the clockwise direction on the pitch circle of the gear 2 and at the start a_1 coincides with b_1. $a_1c_1$is generated when the circle G moves clockwise inside the pitch circle of the gear 2, and in the beginning a_1 coincides with c_1.

The two pitch circles touch each other at P (pitch point). When the generating circle G touches the pitch circle 2 at P, the generating point of the epicycloid is at a_1 and a_1P is normal to the face of tooth on the gear 2. Similarly, when G touches the pitch circle 1 at P, the generating point of the hypocycloid is again at a_1 and a_1P is also normal to the flank of tooth on the gear 1. Thus, if at an instant, a_1P is the common normal to the two profiles of the meshing teeth, the teeth must touch each other tangentially.

According to the law of gearing, the common normal at the point of contact of two mating profiles of the teeth must pass through a fixed point which is also the pitch point. The above discussion shows that the law of gearing is fulfilled in case of cycloidal teeth.

After a little while, let the point of contact of the two mating gears be at a_2. This point is on the generating circle G and if b_2 is considered the start of the epicycloid a_2b_2, and c_2 is considered the start of the hypocycloid a_2c_2 then a_2P will be normal to the two curves a_2b_2 and a_2c_2.

But as the two curves a_1b_1 and a_2b_2 are generated by the same circle rolling outside the same pitch circle, the two curves must be similar. Thus, a_2b_2 can be a portion of the curve a_1b_1. Similarly, a_2c_2 can be a portion of the curve a_1c_1.

Thus, in case of cycloidal teeth, the points of contact such as a_1, a_2, a_3....., P lie on the generating circle G.

After passing through the point P, the point of contact will shift on the other generating circle. Now, the flank of the tooth of the gear 1 will touch the face of the tooth of the gear 2. Thus, path of contact of cycloidal gears lies on the generating circles.

Path of approach = Arc $a_1a_2a_3P$

Arc of approach = Arc $b_1b_2b_3P$ = Arc $c_1c_2c_3P$

But arc $a_1a_2a_3P$ = Arc $b_1b_2b_3P$ = Arc $c_1c_2c_3P$

Therefore, the path of approach is equal to the arc of approach. In the same way, it can be shown that the path of contact will be equal to the arc of contact.

If the direction of rotation of the driver is reversed, the path of approach will be a_4, a_5, a_6,.....,P

Observe that in case of cycloidal teeth, the pressure angle varies from the maximum at the beginning of engagement to zero when the point of contact coincides with pitch point P and then again increases to maximum in the reverse direction.

As the common normal to the two meshing curves passes through the pitch point P, uniform rotary motion will be transmitted only as long as the pitch circles are tangent to each other. If the centre distance between the two pitch circles varies, the point P is shifted and the speed of the driven gear would vary.

Since the cycloidal teeth are made up of two curves, it is very difficult to produce accurate profiles. This has rendered this system obsolete.

10.7 INVOLUTE PROFILE TEETH

An *involute* is defined as the locus of a point on a straight line which rolls without slipping on the circumference of a circle. Also, it is the path traced out by the end of a piece of taut cord being unwound from

the circumference of a circle. The circle on which the straight line rolls or from which the cord is unwound is known as the *base circle.*

Figure 10.21 shows an involute generated by a line rolling over the circumference of a base circle with centre at *O*. At the start, the tracing point is at *A*. As the line rolls on the circumference of the circle, the path *ABC* traced out by the point *A* is the involute.

Note that as *D* can be regarded as the instantaneous centre of rotation of *B*, the motion of *B* is perpendicular to *BD*. Since *BD* is tangent to the base circle, the normal to the involute is a tangent to the base circle.

A short length *EF* of the involute drawn from *A* can be utilized to make the profile of an involute tooth. The other side *HJ* of the tooth has been taken from the involute drawn from *G* in the reverse direction. The profile of an involute tooth is made up of a single curve, and teeth, usually, are termed as single curve teeth.

Owing to the ease of standardization and manufacture, and low cost of production, the use of involute teeth has become universal by entirely superseding the cycloidal shape. Only one cutter or tool is necessary to manufacture a complete set of interchangeable gears. The cutter is in the form of a rack as all gears will gear with their corresponding rack. Moreover, the cutters of this form can be made to a higher degree of accuracy as the teeth of an involute rack are straight.

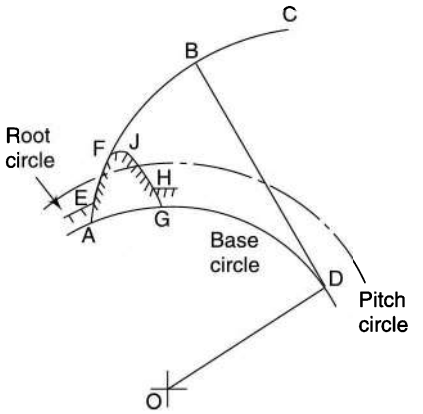

Fig. 10.21

Gear cutter of a milling machine. It cuts involute teeth.

Meshing of Teeth

In Fig. 10.22, two gear wheels 1 and 2 with centres of rotation at *A* and *B* respectively are in contact at *C*. *CE* and *CF* are the tangents to the two base circles 1 and 2 respectively. *t-t* is the common tangent to the two involutes *DC* and *GCH* of the two meshing teeth. The involute *DC* is traced by rolling line *EF* on the base circle of the gear 2 while the involute *GCH* is obtained by rolling line *EF* on the base circle of the gear 1.

From the property of the involute, the tangent *CF* to the base circle of the gear 2 is normal to the involute *DC* or the tangent $t - t$. Similarly, the tangent *CE* to the base circle of the gear 1 is normal to the involute *GC* or the tangent $t - t$. As *CE* and *CF* both are normal to the common tangent t–t at the point *C*, *CE* and *CF* lie

Cutter of a hobbing machine. It cuts multiple teeth.

on a straight line. *ECF* is thus a straight line.

As the wheel 1 rotates in the clockwise direction, the point of contact *C* on the involute *GCH* pushes the involute *DC* along the line *CF*. Therefore, the path of contact of the two involute teeth is along the common tangent to the base circles. This common tangent is also the common normal to the two involutes at the point of contact for all positions.

Also, the common normal to the two involutes divides the line of centres of the two gears at *P*, the pitch point. Thus, the common normal always passes through the pitch point which is the point of contact of two pitch circles.

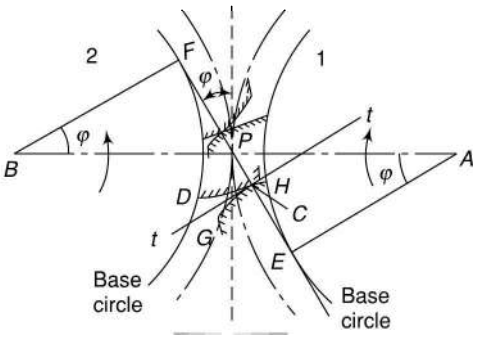

Fig. 10.22

The line of action in case of involute teeth is along the common normal at the point of contact, which is fixed and is the common tangent to the two base circles. This shows that the pressure angle in this case remains constant throughout the engagement of the two teeth. The usual values of the pressure angles are 14.5°, 20° and 25°.

As *EF* is tangent to the base circle 1, *AE* is perpendicular to *EF*.

AEP is a right-angled triangle.

Also $\angle EAP = \varphi$

$AE = AP \cos \varphi$

Similarly, $BF = BP \cos\varphi$

i.e., [Base circle diameter = Pitch circle diameter × $\cos\varphi$]

$$\text{velocity ratio of gears} = \frac{BP}{AP} = \frac{BF}{AE} = \text{constant}$$

Thus, for a pair of involute gears, the velocity ratio is inversely proportional to the pitch circle diameters as well as base circle diameters.

Any shift in the centres of two gears changes the centre distance. If the involutes are still in contact, the common normal to the two involutes at the point of contact will be the new common tangent to the base circles and its intersection with the line of centres as the new pitch point (Fig. 10.23). It can be judged that the shifting of *P* does not alter the ratio *AP/BP* which means the velocity ratio between the two gears remains constant. Of course, in this way there is change in the pressure angle. Altering the centre distance without destroying the correct tooth action is an important property of the involute gears.

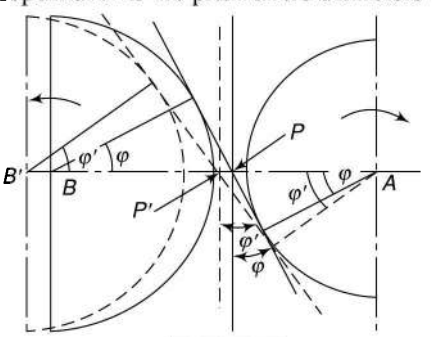

Fig. 10.23

Remember the following in case of involute gears:

1. Points of contact lie on the line of action which is the common tangent to the two base circles.
2. The contact is made when the tip of a tooth of the driven wheel touches the flank of a tooth of the driving wheel and the contact is broken when the tip of the driving wheel touches the flank of the driven wheel.
3. If the direction of angular movement of the wheels is reversed, the points of contact will lie on the other common tangent to the base circles.
4. Initial contact occurs where the addendum circle of the driven wheel intersects the line of action. Final contact occurs at a point where the addendum circle of the driver intersects the line of action.

10.8 INTERCHANGEABLE GEARS

The gears are interchangeable if they are standard ones. It is always a matter of convenience to have gears of standard dimensions which can be replaced easily when they are worn out. The gears are interchangeable if they have

- the same module,
- the same pressure angle,
- the same addendums and dedendums, and
- the same thickness.

A tooth system which relates the various parameters of gears such as pressure angle, addendum, dedendum, tooth thickness, working depth, etc., to attain interchangeability of the gears of all tooth numbers, but of the same pressure angle and pitch is said to be a *standard system*. Usually, the standard cutters are available for their manufacture.

In Table 10.1, tooth proportions for completely interchangeable gears are given. They can be used for operation on standard centre distances. The 14.5° pressure angle system has become obsolete now as the size of the gears used to be larger as compared to the gears with higher angles.

Table 10.1

Tooth system	Pressure angle	addendum	dedendum
Full depth	20°	1 m	1.25 m or 1.35 m
	22.5°	1 m	1.25 m or 1.35 m
	25°	1 m	1.25 m or 1.35 m
Stub	20°	0.8 m	1 m

Preferred modules: 1, 1.25, 1.5, 2, 2.5 3, 4, 5, 6, 8, 10, 12, 16, 20, 25, 30, 40, 50

10.9 NON-STANDARD GEARS

The term non-standard gears apply to such gears as are modified by changing some standard parameters like pressure angle, addendum, tooth depth or centre distance. These changes are made to improve the performance of the gear operation or from the economical point of view.

The recent trend these days is to make the designs of machines as compact as possible to reduce their size and weight which also results in reduction in the costs. Consider a gear set to have a velocity ratio of 4:1. If a pinion of 80 mm pitch diameter is selected for the purpose, the pitch diameter of the gear is 320 mm. Thus, space requirement of the gear is 400 mm. Now, if somehow the pitch diameter of the pinion is reduced by 10 mm, the pitch diameter of the gear is reduced by 40 mm, and the overall reduction in space is 50 mm. Also, the sizes of other components associated with the gear set such as shafts, casings and bearings are also reduced. The only way to have a smaller size of gears is to reduce the number of teeth. However, for a typical type of teeth, it is observed that if the number of teeth is reduced from a certain number, the problems of interference, undercutting and contact ratio hamper the smooth running of the gears. Therefore, the main reason to employ non-standard gears is to prevent interference and undercutting and to maintain a reasonable contact ratio.

It should be remembered that as an involute is generated, its radius of curvature goes on becoming larger and larger, being zero at the base circle. As far as possible, the curve near the base should be avoided because high stresses are developed in the region of sharp curvature.

Centre-distance Modifications The number of teeth on a pinion can be reduced from the minimum allowable number by increasing the centre distance marginally and by changing the tooth proportions and the pressure angle of the gears. A reduction in the interference and improvement in the contact ratio is brought this way. The teeth can be generated with rack cutters of standard pressure angles by displacing the pitch line of the rack from the pitch circle of the gear. This action produces teeth which are thicker than before. As the teeth are cut with a displaced or offset cutter, they will engage at a new pressure angle and at a new centre distance.

Clearance Modifications If the clearance between mating teeth is increased to 0.3 m or 0.4 m instead of the usual value of 0.25 m to have a larger fillet at the root of the tooth, the fatigue strength of the tooth is increased. This way some extra depth is available to smoothen the tooth profile. Interchangeability is not lost this way.

Addendum Modifications In cases where it is not possible to change the centre distances, modifications can be made to the addendum. In such cases, there has to be no change in the pitch circles and the pressure angles. However, the contact region is shifted away from the pinion centre towards the gear centre, decreasing the approach action and increasing the recess action.

Example 10.3 *The following data relate to two meshing gears Velocity ratio* $= \frac{1}{3}$, *Module* $= 4$ *mm, Pressure angle* $= 20°$, *Centre distance* $= 200$ *mm*

Determine the number of teeth and the base circle radius of the gear wheel.

Solution $VR = 1/3$, $\varphi = 20°$, $m = 4$ mm
$C = 200$ mm

(i) $VR = \frac{N_2}{N_1} = \frac{1}{3} = \frac{T_1}{T_2}$ or $T_2 = 3T_1$

and $C = \frac{d_1 + d_2}{2} = \frac{m(T_1 + T_2)}{2}$

or $200 = \frac{4(T_1 + 3T_1)}{2} = 8T_1$

or $T_1 = 25$ and $T_2 = 25 \times 3 = 75$

Number of teeth on gear wheel = 75

(ii) $d_2 = m\,T_2 = 4 \times 75 = 300$ mm

Base circle radius, $d_{b2} = \frac{d_2}{2} \cos\varphi$

$= \frac{300}{2} \times \cos 20° = 141$ mm

10.10 PATH OF CONTACT

Let two gear wheels with centres A and B be in contact (Fig. 10.24).

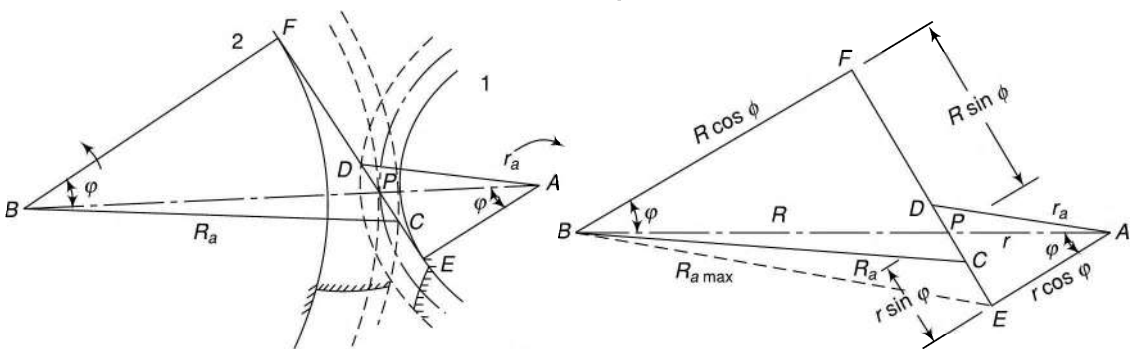

Fig. 10.24

The pinion 1 is the driver and is rotating clockwise. The wheel 2 is driven in the counter-clockwise direction. EF is their common tangent to the base circles.

Contact of the two teeth is made where the addendum circle of the wheel meets the line of action EF, i.e., at C and is broken where the addendum circle of the pinion meets the line of action, i.e., at D. CD is then the path of contact.

Let r = pitch circle radius of pinion

R = pitch circle radius of wheel

r_a = addendum circle radius of pinion

R_a = addendum circle radius of wheel.

Path of contact = path of approach + path of recess

$$\begin{aligned} CD &= CP + PD \\ &= (CF - PF) + (DE - PE) \\ &= \left[\sqrt{R_a^2 - R^2\cos^2\varphi} - R\sin\varphi\right] + \left[\sqrt{r_a^2 - r^2\cos^2\varphi} - r\sin\varphi\right] \\ &= \sqrt{R_a^2 - R^2\cos^2\varphi} + \sqrt{r_a^2 - r^2\cos^2\varphi} - (R+r)\sin\varphi \end{aligned} \tag{10.5}$$

Observe that the path of approach can be found if the dimensions of the driven wheel are known. Similarly, the path of recess is known from the dimensions of the driving wheel (pinion).

10.11 ARC OF CONTACT

The arc of contact is the distance travelled by a point on either pitch circle of the two wheels during the period of contact of a pair of teeth.

In Fig.10.25, at the beginning of engagement, the driving involute is shown as GH; when the point of contact is at P, it is shown as JK and when at the end of engagement, it is DL. The arc of contact is $P'P''$ and it consists of the arc of approach $P'P$ and the arc of recess PP''.

Let the time to traverse the arc of approach is t_a. Then

Arc of approach = $P'P$ = Tangential velocity of $P' \times$ Time of approach

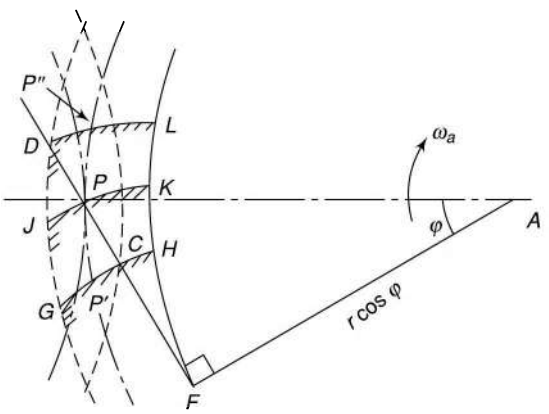

Fig. 10.25

$$= \omega_a r \times t_a \qquad (t_a = \text{time of approach})$$

$$= \omega_a (r\cos\varphi)\frac{1}{\cos\varphi} t_a$$

$$= (\text{Tang. vel. of } H) t_a \frac{1}{\cos\varphi} \qquad (AF = AH)$$

$$= \frac{\text{Arc } HK}{\cos\varphi}$$

$$= \frac{\text{Arc } FK - \text{Arc } FH}{\cos\varphi}$$

$$= \frac{FP - FC}{\cos\varphi} = \frac{CP}{\cos\varphi}$$

Arc FK is equal to the path FP as the point P is on the generator FP that rolls on the base circle FHK to generate the involute PK. Similarly, arc FH = Path FC.

Arc of recess = PP'' = Tang. vel. of $P \times$ Time of recess

$$= \omega_a r \times t_r \qquad (t_r = \text{time of recess})$$

$$= \omega_a (r\cos\varphi)\frac{1}{\cos\varphi} t_r$$

$$= (\text{Tang. vel. of } K)\, t_r \frac{1}{\cos\varphi}$$

$$= \frac{\text{Arc } KL}{\cos\varphi} = \frac{\text{Arc } FL - \text{Arc } FK}{\cos\varphi}$$

$$PP'' = \frac{FD - FP}{\cos\varphi} = \frac{PD}{\cos\varphi}$$

or

$$\text{Arc of contact} = \frac{CP}{\cos\varphi} + \frac{PD}{\cos\varphi} = \frac{CP + PD}{\cos\varphi} = \frac{CD}{\cos\varphi}$$

or

$$\text{Arc of contact} = \frac{\text{Path of contact}}{\cos\varphi} \tag{10.6}$$

10.12 NUMBER OF PAIRS OF TEETH IN CONTACT (CONTACT RATIO)

The arc of contact is the length of the pitch circle traversed by a point on it during the mating of a pair of teeth.

Thus, all the teeth lying in between the arc of contact will be meshing with the teeth on the other wheel.

Therefore, the number of teeth in contact, $n = \dfrac{\text{Arc of contact}}{\text{Circular pitch}} = \dfrac{CD}{\cos\varphi}\dfrac{1}{p}$ (10.7)

As the ratio of the arc of contact to the circular pitch is also the *contact ratio*, the number of teeth is also expressed in terms of contact ratio.

For continuous transmission of motion, at least one tooth of one wheel must be in contact with another tooth of the second wheel. Therefore, n must be greater than unity.

If n lies between 1 and 2, the number of teeth in contact at any time will not be less than one and never more than two. If n is between 2 and 3, it is never less than two pairs of teeth and not more than three pairs, and so on. If n is 1.6, one pair of teeth are always in contact whereas two pairs of teeth are in contact for 60% of the time.

Example 10.4 *Each of two gears in a mesh has 48 teeth and a module of 8 mm. The teeth are of 20° involute profile. The arc of contact is 2.25 times the circular pitch. Determine the addendum.*

Solution $\varphi = 20°$; $t = T = 48$; $m = 8$ mm;

$$R = r = \frac{mT}{2} = \frac{8 \times 48}{2} = 192 \text{ mm}; R_a = r_a$$

Arc of contact = 2.25 × Circular pitch = 2.25π m = $2.25\pi \times 8 = 56.55$ mm

Path of contact = 56.55 × cos 20° = 53.14 mm

or $$(\sqrt{R_a^2 - R^2 \cos^2 \varphi - R \sin \varphi}) + (\sqrt{r_a^2 - r^2 \cos^2 \varphi - r \sin \varphi}) = 53.14$$

or $$2(\sqrt{R_a^2 - 192^2 \cos^2 20° - 192 \sin 20°}) = 53.14 \quad \text{or} \quad R_a = 202.6 \text{ mm}$$

Addendum = $R_a - R$ = 202.6 – 192 = 10.6 mm

Example 10.5 *Two involute gears in mesh have 20° pressure angle. The gear ratio is 3 and the number of teeth on the pinion is 24. The teeth have a module of 6 mm. The pitch line velocity is 1.5 m/s and the addendum equal to one module. Determine the angle of action of the pinion (the angle turned by the pinion when one pair of teeth is in the mesh) and the maximum velocity of sliding.*

Solution $\varphi = 20°$; $t = 24$; $m = 6$ mm;

$T = 24 \times 3 = 72$;

$$r = \frac{mt}{2} = \frac{6 \times 24}{2} = 72 \text{ mm};$$

$R = 72 \times 3 = 216$ mm; $r_a = 72 + 6 = 78$ mm ; $R_a = 216 + 6 = 222$ mm

$$\text{Path of contact} = (\sqrt{R_a^2 - R^2 \cos^2 \varphi - R \sin \varphi}) + (\sqrt{r_a^2 - r^2 \cos^2 \varphi - r \sin \varphi})$$

$$= (\sqrt{222^2 - 216^2 \cos^2 20° - 216 \sin 20°}) + (\sqrt{78^2 - 72^2 \cos^2 20° - 72 \sin 20°})$$

= 16.04 + 14.18 = 30.22 mm

$$\text{Arc of contact} = \frac{\text{Path of contact}}{\cos \varphi} = \frac{30.22}{\cos 20°}$$

= 32.16 mm

$$\text{Angle of action} = \frac{\text{Arc of contact}}{r} = \frac{32.16}{72}$$

= 0.4467 rad = 0.4467 × 180/π = 25.59°

Velocity of sliding = $(\omega_p + \omega_g)$ × Path of approach

$$= \left(\frac{v}{r} + \frac{v}{R}\right) \times \text{Path of approach}$$

$$= \left(\frac{1500}{72} + \frac{1500}{216}\right) \times 16.04 = 445.6 \text{ mm/s}$$

Example 10.6 *Two involute gears in a mesh have a module of 8 mm and a pressure angle of 20°. The larger gear has 57 while the pinion has 23 teeth. If the addenda on pinion and gear wheels are equal to one module, find the*

(i) contact ratio (the number of pairs of teeth in contact)
(ii) angle of action of the pinion and the gear wheel
(iii) ratio of the sliding to rolling velocity at the
(a) beginning of contact
(b) pitch point
(c) end of contact

Solution $\varphi = 20°$; $T = 57$; $t = 23$; $m = 8$ mm;

addendum = m = 8 mm

$$R = \frac{mT}{2} = \frac{8 \times 57}{2} = 228 \text{ mm};$$

$R_a = R + m = 228 + 8 = 236$ mm

$$r = \frac{mt}{2} = \frac{8 \times 23}{2} = 92 \text{ mm};$$

$r_a = r + m = 92 + 8 = 100$ mm

(i) $n = \dfrac{\text{Arc of contact}}{\text{Circular pitch}} = \left(\dfrac{\text{Path of contact}}{\cos\varphi}\right)$

$$\times \frac{1}{\pi m} = \frac{\text{Path of approach + Path of recess}}{\cos\varphi \times \pi m}$$

$$= \frac{\left[\begin{array}{l}\sqrt{R_a^2 - R^2\cos^2\varphi} - R\sin\varphi \\ +\sqrt{r_a^2 - r^2\cos^2\varphi} - r\sin\varphi\end{array}\right]}{\cos\varphi \times \pi m}$$

$$\frac{\left[\begin{array}{l}\sqrt{(236)^2 - (228^2\cos^2 20^\circ} - 228\sin 20^\circ \\ +\sqrt{(100)^2 - (92)^2\cos^2 20^\circ} - 92\sin 20^\circ\end{array}\right]}{\cos 20^\circ \pi \times 8}$$

$$= \frac{20.97 + 18.79}{\cos 20^\circ \times \pi \times 8} = 42.31 \times \frac{1}{\pi \times 8} = \underline{1.68}$$

(ii) Angle of action, $\delta_p = \dfrac{\text{Arc of contact}}{r} = \dfrac{42.31}{92}$

$= 0.46$ rad or $0.46 \times 180/\pi = 26.3^\circ$

$\delta_g = \dfrac{\text{Arc of contact}}{R} = \dfrac{42.31}{228} = 0.1856$ rad

or $0.1856 \times 180/\pi = 10.63^\circ$

(iii) (a) $\dfrac{\text{Sliding velocity}}{\text{Rolling velocity}}$

$$= \frac{(\omega_p + \omega_g) \times \text{Path of approach}}{\text{Pitch line velocity } (= \omega_p \times r)}$$

$$= \frac{\left(\omega_p + \dfrac{23}{57}\omega_p\right) \times 20.97}{\omega_p \times 92} = \underline{0.32}$$

(b) $\dfrac{\text{Sliding velocity}}{\text{Rolling velocity}} = \dfrac{(\omega_p + \omega_g) \times 0}{\text{Pitch line velocity}} = 0$

(c) $\dfrac{\text{Sliding velocity}}{\text{Rolling velocity}}$

$$= \frac{\left(\omega_p + \dfrac{23}{57}\omega_p\right) \times \text{Path of recess}}{\omega_p \times r}$$

$$= \frac{\left(1 + \dfrac{23}{57}\right) \times 18.79}{92} = \underline{0.287}$$

Example 10.7 *Two 20° gears have a module pitch of 4 mm. The number of teeth on gears 1 and 2 are 40 and 24 respectively. If the gear 2 rotates at 600 rpm, determine the velocity of sliding when the contact is at the tip of the tooth of gear 2. Take addendum equal to one module.*

Also, find the maximum velocity of sliding.

Solution 1 is the gear wheel and 2 is the pinion.

$\varphi = 20°$; $T = 40$; $N_p = 600$ mm; $t = 24$; $m = 4$ mm

Addendum = 1 module = 4 mm

$R = \dfrac{mT}{2} = \dfrac{4 \times 40}{2} = 80$ mm; $R_a = 80 + 4 = 84$ mm

$r = \dfrac{mt}{2} = \dfrac{4 \times 24}{2} = 48$ mm; $r_a = 48 + 4 = 52$ mm

$N_g = N_p \times \dfrac{t}{T} = 600 \times \dfrac{24}{40} = 360$ rpm

(i) Let pinion (gear 2) be the driver.

The tip of the driving wheel is in contact with a tooth of the driven wheel at the end of engagement. Thus, it is required to find the path of recess which is obtained from the dimensions of the driving wheel.

Path of recess $= \sqrt{r_a^2 - (r\cos\varphi)^2} - r\sin\varphi$

$= \sqrt{(52)^2 - (48\cos 20°)^2} - 48\sin 20°$

$= 9.458$ mm

Velocity of sliding $= (\omega_p + \omega_g) \times$ Path of recess

$= 2\pi(N_p + N_g) \times 9.458$

$= 2\pi(600 + 360) \times 9.458$

$= 57\,049$ mm/min

$= \underline{950.8 \text{ mm/s}}$

(ii) In case the gear wheel is the driver, the tip of the pinion will be in contact with the flank of a tooth of the gear wheel at the beginning of contact. Thus, it is required to find the distance of the point of contact from the pitch point, i.e., path of approach. The path of approach is found from the dimensions of the driven wheel which is again pinion.

Thus, path of approach

$$= \sqrt{r_a^2 - (r\cos\varphi)^2} - r\sin\varphi$$

= 9.458 mm, as before

and velocity of sliding = 950.8 mm/s

Thus, it is immaterial whether the driver is the gear wheel or the pinion, the velocity of sliding is the same when the contact is at the tip of the pinion.

The maximum velocity of sliding will depend upon the larger path considering any of the wheels to be the driver.

Consider pinion to be the driver.

Path of recess = 9.458 mm

Path of approach

$$= \sqrt{R_a^2 - (R\cos\varphi)^2} - R\sin\varphi$$

$$= \sqrt{(84)^2 - (80\cos 20°)} - 80\sin 20°$$

= 10.117 mm

This is also the path of recess if the wheel becomes the driver

Maximum velocity of sliding

$$= (\omega_p + \omega_g) \times \text{Maximum path}$$

$$= 2\pi(600 + 360) \times 10.117$$

= 61024 mm/min

= <u>1017.1 mm/s</u>

10.13 INTERFERENCE IN INVOLUTE GEARS

Power transmission through a pair of teeth is along the line of action or the common normal to the two involutes at the point of contact. The common normal is also a common tangent to the two base circles and passes through the pitch point. At any instant, the portions of the tooth profiles which are in contact must be involutes so that the line of action does not deviate. If any of the two surfaces is not an involute, the two surfaces would not touch each other tangentially and the transmission of power would not be proper. Mating of two non-conjugate (non-involute) teeth is known as *interference* because the two teeth do not slide properly and thus rough action and binding occurs. Owing to non-involute profile, the contacting teeth have different velocities which can lock the two gears.

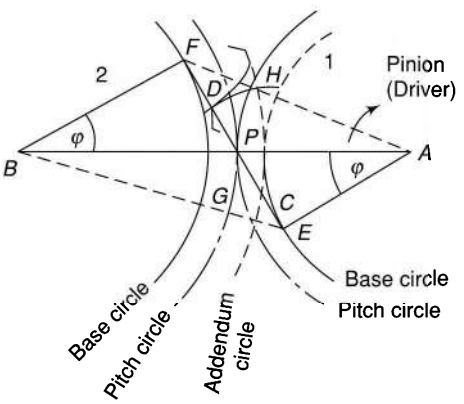

Fig. 10.26

Figure 10.26 shows two gears in mesh. If the pinion is the driver, the line of action will be along *EF* which is the common tangent to base circles of the two gears. Let the addendum radius of the wheel be *BC* and that of pinion, *AD*. The teeth on the pinion and wheel are engaged at *C* and are disengaged at *D*. Now, if the radius of the addendum circle of the pinion is increased, the point *D* shifts along *PF* towards *F* and the point *D* coincides with *F* when the radius is equal to *AF*. Any further increase in the value of this radius will result in shifting the point of contact inside the base circle of the wheel. Since an involute can exist only outside the base circle, therefore, any profile of teeth inside the base circle will be of a non-involute type. Usually, a radial profile is adopted for this portion. Thus, the profiles in such a case cannot be tangent to each other and the tip of the pinion would try to dig out the flank of the tooth of the wheel. Therefore, interference occurs in the mating of two gears.

Similarly, if the addendum radius of the wheel is made greater than BE, the tip of the wheel tooth will be in contact with a portion of the non-involute profile of the pinion tooth for some of the engagement. The conclusion is that to have no interference of the teeth, the addendum circles of the wheel and the pinion must intersect the line of action between E and F. The points E and F are called *interference points*.

Note that to avoid interference, the limiting value of the addendum of the wheel is GE whereas that of the pinion is HF and the latter is clearly greater than the former. Thus, if the addenda of the wheel and the pinion are to be equal, the addendum circle of the wheel passes through the limiting point E on the line of action before the addendum circle of the pinion passes through the limiting point F on the same line. Thus, for equal addenda of the wheel and the pinion, the addendum radius of the wheel decides whether the interference will occur or not.

10.14 MINIMUM NUMBER OF TEETH

As explained in the previous section, the maximum value of the addendum radius of the wheel to avoid interference can be up to BE. Referring Fig. 10.24,

$$\begin{aligned}
(BE)^2 &= (BF)^2 + (FE)^2 \\
&= (BF)^2 + (FP + PE)^2 \\
&= (R\cos\varphi)^2 + (R\sin\varphi + r\sin\varphi)^2 \\
&= R^2\cos^2\varphi + R^2\sin^2\varphi + r^2\sin^2\varphi + 2\,r\,R\sin^2\varphi \\
&= R^2(\cos^2\varphi + \sin^2\varphi) + \sin^2\varphi\,(r^2 + 2rR) \\
&= R^2 + (r^2 + 2rR)\sin^2\varphi \\
&= R^2\left[1 + \frac{1}{R^2}(r^2 + 2rR)\sin^2\varphi\right] \\
&= R^2\left[1 + \left(\frac{r^2}{R^2} + \frac{2r}{R}\right)\sin^2\varphi\right]
\end{aligned}$$

$$BE = R\sqrt{1 + \frac{r}{R}\left(\frac{r}{R} + 2\right)\sin^2\varphi}$$

Therefore, the maximum value of the addendum of the wheel can be equal to (BE – Pitch circle radius) or

$$\begin{aligned}
a_{w\max} &= R\sqrt{1 + \frac{r}{R}\left(\frac{r}{R} + 2\right)\sin^2\varphi} - R \\
&= R\left[\sqrt{1 + \frac{r}{R}\left(\frac{r}{R} + 2\right)\sin^2\varphi} - 1\right]
\end{aligned}$$

Let t = number of teeth on the pinion

T = number of teeth on the wheel

Now, $R = \dfrac{mT}{2}, r = \dfrac{mt}{2}$ and $G = \dfrac{T}{t}$ = Gear ratio

Hence, $$a_{w\max} = \frac{mT}{2}\left[\sqrt{1 + \frac{t}{T}\left(\frac{t}{T} + 2\right)\sin^2\varphi} - 1\right] = \frac{mT}{2}\left[\sqrt{1 + \frac{1}{G}\left(\frac{1}{G} + 2\right)\sin^2\varphi} - 1\right]$$

Let the adopted value of the addendum in some case be a_w times the module of teeth. Then this adopted value of the addendum must be less than the maximum value of the addendum to avoid interference.

i.e.
$$\frac{mT}{2}\left[\sqrt{1+\frac{1}{G}\left(\frac{1}{G}+2\right)\sin^2\varphi}-1\right]\geq a_w m$$

or
$$T\geq\frac{2a_w}{\sqrt{1+\frac{1}{G}\left(\frac{1}{G}+2\right)\sin^2\varphi}-1}$$

In the limit,
$$T=\frac{2a_w}{\sqrt{1+\frac{1}{G}\left(\frac{1}{G}+2\right)\sin^2\varphi}-1} \tag{10.8}$$

This gives the minimum number of teeth on the wheel for the given values of the gear ratio, the pressure angle and the *addendum coefficient* a_w.

The minimum number of teeth on the pinion is given by,
$$t=\frac{T}{G}$$

For $a_w = 1$, i.e., when the addendum is equal to one module,
$$T\geq\frac{2}{\sqrt{1+\frac{1}{G}\left(\frac{1}{G}+2\right)\sin^2\varphi}-1}$$

For equal number of teeth on the pinion and the wheel, $G = 1$ and
$$T_{\min}=\frac{2}{\sqrt{1+3\sin^2\varphi}-1}$$

For a pressure angle of 20°, i.e., $\varphi = 20°$
$$T_{\min}=\frac{2}{\sqrt{1+3\sin^2 20°}-1}=12.31 \text{ or } 13$$

Thus, for two wheels of equal size with 20° pressure angle and addendum equal to one module, the minimum number of teeth on each wheel must be 13 to avoid interference.

- In case of pinion, the maximum value of the addendum radius to avoid interference is AF (Fig. 10.24) and thus
  $(AF)^2 = (r\cos\varphi)^2 + (R\sin\varphi + r\sin\varphi)^2$
  and it can be shown that maximum value of the addendum of the pinion is
$$a_{p\max}=r\sqrt{1+\frac{R}{r}\left(\frac{R}{r}+2\right)\sin^2\varphi}-r=\frac{mt}{2}\left[\sqrt{1+G(G+2)\sin^2\varphi}-1\right]$$

Example 10.8 *Two 20° involute spur gears mesh externally and give a velocity ratio of 3. The module is 3 mm and the addendum is equal to 1.1 module. If the pinion rotates at 120 rpm, determine the*

(i) minimum number of teeth on each wheel to avoid interference

(ii) contact ratio

Solution $\varphi = 20°$ $N_p = 120$ rpm
$VR = 3$ Addendum = 1.1 m
$m = 3$ mm $\alpha_w = 1.1$

(i) $$T = \frac{2a_w}{\sqrt{1+\frac{1}{G}\left(\frac{1}{G}+2\right)\sin^2\varphi - 1}}$$

$$= \frac{2\times 1.1}{\sqrt{1+\frac{1}{3}\left(\frac{1}{3}+2\right)\sin^2 20° - 1}} = 49.44$$

Taking the higher whole number divisible by the velocity ratio,

i.e., $T = 51$ and $t = \frac{51}{3} = \underline{17}$

(ii) Contact ratio or number of pairs of teeth in contact,

$$n = \frac{\text{Arc of contact}}{\text{Circular pitch}}$$

$$= \left(\frac{\text{Path of contact}}{\cos\varphi}\right)\times\frac{1}{\pi m}$$

or

$$n = \frac{\sqrt{R_a^2 - R^2\cos^2\varphi} - R\sin\varphi + \sqrt{r_a^2 - r^2\cos^2\varphi} - r\sin\varphi}{\cos\varphi\times\pi m}$$

We have, $R = \frac{mT}{2} = \frac{3\times 51}{2} = 76.5$ mm

$R_a = R + 1.1\,m = 76.5 + 1.1\times 3 = 79.8$ mm

$r = \frac{mt}{2} = \frac{3\times 17}{2} = 25.5$ mm

$r_a = 25.5 + 1.1\times 3 = 28.8$ mm

$$n = \frac{\left[\sqrt{(79.8)^2 - (76.5\cos 20°)^2} - 76.5\sin 20° + \sqrt{(28.8)^2 - (25.5\cos 20°)^2} - 25.5\sin 20°\right]}{\cos 20°\times\pi\times 3}$$

$$= \frac{34.646 - 26.165 + 15.977 - 8.720}{\cos 20°\times\pi\times 3}$$

$= 1.78$

Thus, 1 pair of teeth will always remain in contact whereas for 78% of the time, 2 pairs of teeth will be in contact.

Example 10.9 *Two involute gears in a mesh have a velocity ratio of 3. The arc of approach is not to be less than the circular pitch when the pinion is the driver. The pressure angle of the involute teeth is 20°. Determine the least number of teeth on each gear. Also, find the addendum of the wheel in terms of module.*

Solution $\varphi = 20°$; $VR = 3$;

Arc of approach = Circular pitch = πm .... (Given)

$\therefore$ Path of approach = $\pi m \cos 20° = 2.952\,m$

Maximum length of path of approach

$= r\sin\phi = \frac{mt}{2}.\sin 20° = 0.171\,mt$

$\therefore$ $0.171\,mt = 2.952\,m$ or $t = 17.26$ say 18 teeth

and $T = 18\times 3 = 54$

Maximum addendum of the wheel,

$$a_{w\max} = \frac{mT}{2}\left[\sqrt{1+\frac{1}{G}\left(\frac{1}{G}+2\right)\sin^2\varphi - 1}\right]$$

$$= \frac{m\times 54}{2}\left[\sqrt{1+\frac{1}{3}\left(\frac{1}{3}+2\right)\sin^2 20°} - 1\right] = 1.2\,m$$

Example 10.10 *Two 20° involute spur gears have a module of 10 mm. The addendum is equal to one module. The larger gear has 40 teeth while the pinion has 20 teeth.*

Will the gear interfere with the pinion?

Solution $\varphi = 20°$; $T = 40$; $t = 20$; $m = 10$ mm;

Addendum = 1 m = 10 mm

$R = \frac{mT}{2} = \frac{10\times 40}{20} = 200$ mm;

$R_a = 200 + 10 = 210$ mm

$r = \frac{mt}{2} = \frac{10\times 20}{2} = 100$ mm;

$r_a = 100 + 10 = 110$ mm

Let pinion be the driver (Refer Fig.10.24),

Path of approach,

$$PC = \sqrt{R_a^2 - (R\cos\varphi)^2} - R\sin\phi$$

$$= \sqrt{(210)^2 - (200 \times \cos 20°)^2} - 200 \sin 20°$$

$= 25.3$ mm

To avoid interference, the maximum length of the path of approach can be PE.

$PE = r \sin \varphi = 100 \sin 20° = 34.2$ mm

Since the actual path of approach is within the maximum limit, no interference occurs.

Alternative Method Addendum radius of wheel = 210 mm

To avoid interference, maximum addendum radius $R_{a\,\max}$ can be equal to BE.

i.e., $R_{a\max} = BE = \sqrt{(BF)^2 + (FP + PE)^2}$

$$= \sqrt{(R\cos\varphi)^2 + (R\sin\varphi + r\sin\varphi)^2}$$

$$= \sqrt{(200\cos 20°)^2 + (200\sin 20° + 100\sin 20°)^2}$$

$= 214.1$ mm

As the actual addendum radius of the wheel is lesser than the maximum permissible value of the addendum radius, no interference occurs.

Example 10.11 *Two 20° involute spur gears have a module of 10 mm. The addendum is one module. The larger gear has 50 teeth and the pinion has 13 teeth. Does interference occur? If it occurs, to what value should the pressure angle be changed to eliminate interference?*

Solution $\varphi = 20°$; $T = 50$; $m = 10$ mm; $t = 13$; Addendum = 1 m = 10 mm

$$R = \frac{mT}{2} = \frac{10 \times 50}{2} = 250 \text{ mm};$$

$R_a = 250 + 10 = 260$ mm

$$r = \frac{mt}{2} = \frac{10 \times 13}{2} = 65 \text{ mm}$$

Refer Fig.10.24,

$$R_{a\max} = \sqrt{(R\cos\varphi)^2 + (R\sin\varphi + r\sin\varphi)^2}$$

$$= \sqrt{(250\cos 20°)^2 + (250\sin 20° + 65\sin 20°)^2}$$

$$= \sqrt{(250\cos 20°)^2 + (315\sin 20°)^2}$$

$= 258.45$ mm

The actual addendum radius R_a is more than the maximum value $R_{a\,max}$, and therefore, interference occurs.

- Maximum addendum radius can also be found using the relation

$$R_{a\max} = R\sqrt{1 + \frac{t}{T}\left(\frac{t}{T} + 2\right)\sin^2\varphi}$$

$$= 250\sqrt{1 + \frac{13}{50}\left(\frac{13}{50} + 2\right)\sin^2\varphi} = 258.45 \text{ mm}$$

The new value of φ can be found by taking $R_{a\,max}$ equal to R_a.

i.e., $260 = \sqrt{(250\cos\varphi)^2 + (315\sin\varphi)^2}$

or $(260)^2 = (250)^2\cos^2\varphi + (315)^2(1 - \cos^2\varphi)$

$= (250)^2\cos^2\varphi + (315)^2 - (315)^2\cos^2\varphi$

or $\cos^2\varphi = \dfrac{(315)^2 - (260)^2}{(315)^2 - (250)^2} = 0.861$

$\cos\varphi = 0.928$ or $\varphi = 21.88°$ or $21°52'$

Thus, if the pressure angle is increased to 21°52′, the interference is avoided.

Example 10.12 *The following data relate to two meshing involute gears:*

Number of teeth on the gear wheel	= *60*
Pressure angle	= *20°*
Gear ratio	= *1.5*
Speed of the gear wheel	= *100 rpm*
Module	= *8 mm*

The addendum on each wheel is such that the path of approach and the path of recess on each side are 40% of the maximum possible length each. Determine the addendum for the pinion and the gear and the length of the arc of contact.

Solution $R = \dfrac{mT}{2} = \dfrac{8 \times 60}{2} = 240$ mm;

$$r = \frac{mT}{2} = \frac{8 \times (60/1.5)}{2} = 160 \text{ mm}$$

Refer Fig. 10.24 and let the pinion be the driver.

Maximum possible length of path of approach = $r \sin \varphi$

Actual length of path of approach = $0.4 \times r \sin \varphi$

Similarly, actual length of path of recess = $0.4 R \sin \varphi$

Thus, we have

$$0.4r \sin \varphi = \sqrt{R_a^2 - (R\cos\varphi)^2} - R\sin\varphi$$

$$0.4 \times 160 \ \sin 20° = \sqrt{R_a^2 - (240\cos 20°)^2} - 240 \sin 20°$$

$$R_a^2 - 50\,862 = 10\,809.8$$

$$R_a^2 = 61671.8$$

$$R_a = 248.3 \text{ mm}$$

Addendum of the wheel = 248.3 – 240 = <u>8.3 mm</u>

Also, $0.4R \ \sin\varphi = \sqrt{r_a^2 - (r\cos\varphi)^2} - r\sin\varphi$

$$0.4 \times 240 \ \sin 20° = \sqrt{r_a^2 - (160\cos 20°)^2} - 160 \sin 20°$$

or $\quad r_a^2 - 22\,605 = 7666$

or $\quad r_a^2 = 30\,271$

or $\quad r_a = 174$ mm

Addendum of the pinion = 174 – 160 = <u>14 mm</u>

$$\text{Arc of contact} = \frac{\text{Path of contact}}{\cos\varphi}$$

$$= 0.4\left(\frac{r\sin\varphi + R\sin\varphi}{\cos\varphi}\right)$$

$$= 0.4 \times (240 + 160)\frac{\sin 20°}{\cos 20°} = \underline{58.2 \text{ mm}}$$

Example 10.13 *A pinion of 20° involute teeth rotating at 275 rpm meshes with a gear and provides a gear ratio of 1.8. The number of teeth on the pinion is 20 and the module is 8 mm. If the interference is just avoided, determine (i) the addenda on the wheel and the pinion (ii) the path of contact, and (iii) the maximum velocity of sliding on both sides of the pitch point.*

Solution $\varphi = 20°$; $VR = 1.8$; $m = 8$ mm; $t = 20$; $G = 1.8$; $T = 20 \times 1.8 = 36$; $N = 275$ rpm

$$R = \frac{mT}{2} = \frac{8 \times 36}{2} = 144 \text{ mm}; r = \frac{144}{1.8} = 80 \text{ mm}$$

Maximum addendum of the wheel,

$$a_{w\max} = R\left[\sqrt{1 + \frac{1}{G}\left(\frac{1}{G} + 2\right)\sin^2\varphi} - 1\right]$$

$$= 144\left[\sqrt{1 + \frac{1}{1.8}\left(\frac{1}{1.8} + 2\right)\sin^2 20°} - 1\right]$$

$= 144\ (1.08 - 1) = 11.5$ mm

Maximum addendum of the pinion,

$$a_{p\max} = r\left[\sqrt{1 + G(G+2)\sin^2\varphi} - 1\right]$$

$$= 80\left[\sqrt{1 + 1.8(1.8+2)\sin^2 20°} - 1\right] = 27.34 \text{ mm}$$

Path of contact when the interference is just avoided

= maximum length of path of approach + maximum length of path of recess

$= r \sin \varphi + R \sin \varphi = 80 \sin 20° + 144 \sin 20°$

$= 27.36 + 49.24 = 76.6$ mm

$$\omega_p = \frac{2\pi \times 275}{60} = 28.8 \text{ rad/s}; \ \omega_g = \frac{28.8}{1.8} = 16 \text{ rad/s}$$

Velocity of sliding on one side = $(\omega_p + \omega_g) \times$ Path of approach

$= (28.8 + 16) \times 27.36 = 1226$ mm/s or 1.226 m/s

Velocity of sliding on other side = $(\omega_p + \omega_g) \times$ Path of recess

$= (28.8 + 16) \times 49.24 = 2206$ mm/s or 2.206 m/s

Example 10.14 *The centre distance between two spur gears in a mesh is to be approximately 275 mm. The gear ratio is 10 to 1. The pinion transmits 360 kW at 1800 rpm. The pressure angle of the involute teeth is 20° and the addendum is equal to one module. The limiting value of normal tooth pressure is 1kN/mm of width. Determine the*

(i) nearest standard module so that interference does not occur,

(ii) number of teeth on each gear wheel, and

(iii) width of pinion.

Solution $\varphi = 20°$; $VR = 10$; $C = 275$ mm; $P = 360$ kW; $p = 1$ kN/mm of width; $N_p = 1800$ rpm

$$VR = \frac{N_p}{N_g} = \frac{T_g}{T_p} = \frac{d_g}{d_p} \text{ or } d_g = 10\, d_p$$

$$C = \frac{d_p + d_g}{2} \text{ or } d_p + d_g = 2 \times 275 = 550 \text{ mm}$$

or $11 d_p = 550$ or $d_p = 50$ mm and
$d_g = 50 \times 10 = 500$ mm

Minimum number of teeth on gear wheel,

$$T = \frac{2a_w}{\sqrt{1 + \frac{1}{G}\left(\frac{1}{G} + 2\right)\sin^2\varphi - 1}}$$

$$= \frac{2 \times 1}{\sqrt{1 + \frac{1}{10}\left(\frac{1}{10} + 2\right)\sin^2 20° - 1}} = 164$$

(i) Number of teeth on pinion = 164/10 = 16.4 say 17

∴ number of teeth on gear wheel
= 17 × 10 = 170

(ii) Now $m = \frac{d_p}{t} = \frac{50}{17} \approx 3$ mm

Exact $d_p = m\, T_p = 3 \times 17 = 51$ mm and
$d_g = m\, T_g = 3 \times 170 = 510$ mm

Exact centre distance,

$$C = \frac{d_p + d_g}{2} = \frac{51 + 510}{2} = 280.5 \text{ mm}$$

(iii) $P = \frac{2\pi NT}{60}$ or $360 \times 1000 = \frac{2\pi \times 1800 \times T}{60}$

or $T = 1909.9$ N.m

$$\text{Tangential force} = \frac{1909.9 \times 10^3}{51/2} = 74\,896 \text{ N}$$

Normal pressure on the tooth

$$= \frac{F}{\cos\varphi} = \frac{74\,896}{\cos 20°} = 79\,700 \text{ N}$$

$$\text{Width of pinion} = \frac{F_n}{\text{Limiting normal pressure}}$$

$$= \frac{79\,700}{1000} = 79.7 \text{ mm}$$

10.15 INTERFERENCE BETWEEN RACK AND PINION

Figure 10.27 shows a rack and pinion in which pinion is rotating in the clockwise direction and driving the rack. P is the pitch point and PE is the line of action. Engagement of the rack tooth with the pinion tooth occurs at C. To avoid interference, the maximum addendum of the rack can be increased in such a way that C coincides with E. Thus, the addendum of the rack must be less than GE.

Let the adopted value of the addendum of the rack be $a_r m$ where a_r is the *addendum coefficient* by which the standard value of the addendum has been multiplied.

$$GE = PE \sin\phi = (r \sin\phi)\sin\phi = r\sin^2\phi$$

$$= \frac{mt}{2}\sin^2\varphi$$

To avoid interference,

$$GE \geq a_r m \text{ or } \frac{mt}{2}\sin^2\varphi \geq a_r m \text{ or } t \geq \frac{2a_r}{\sin^2\varphi}$$

When $a_r = 1$, i.e., for standard addendum,

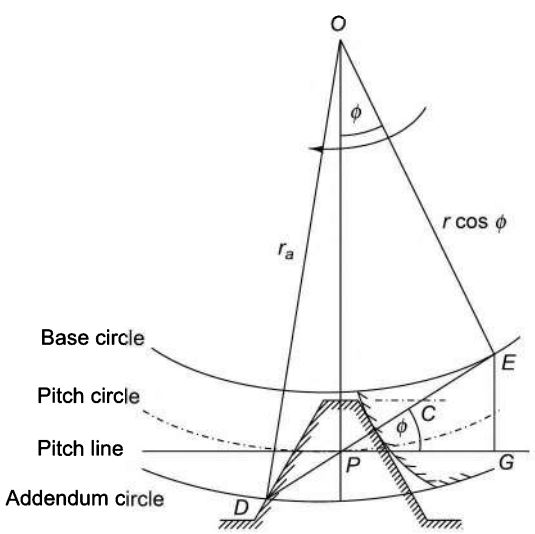

Fig. 10.27

$$t_{\min} \geq \frac{2}{\sin^2 \varphi}$$

For 20° pressure angle, $\phi = 20°$, $\therefore$ $t_{\min} = 17.1$ or 18

Thus, the number of minimum teeth on the pinion to avoid interference is 18.

$$\text{Path of contact} = CP + DP = \frac{\text{Add. of rack}}{\cos\varphi} + \sqrt{r_a^2 - (r\cos\varphi)^2} - r\sin\varphi$$

$$\text{Maximum path of contact to avoid interference} = DE = \sqrt{r_a^2 - (r\cos\varphi)^2}$$

Example 10.15 *A pinion of 32 involute teeth and 4 mm module drives a rack. The pressure angle is 20°. The addendum of both pinion and rack is the same. Determine the maximum permissible value of the addendum to avoid interference. Also, find the number of pairs of teeth in contact.*

Solution $t = 32$; $m = 4$ mm; $\phi = 20°$;

$$r = \frac{mt}{2} = \frac{4 \times 32}{2} = 64 \text{ mm}$$

Refer Fig. 10.27,

To avoid interference, the maximum value of addendum = GE

$= r\sin^2\varphi = 64\sin^2 20° = \underline{7.487 \text{ mm}}$

Addendum radius of the pinion

$= 64 + 7.487 = 71.487$ mm

Maximum path of contact to avoid interference = DE

$$= \sqrt{r_a^2 - (r\cos\varphi)^2} = \sqrt{71.487^2 - (64\cos 20°)^2}$$

$= 38.646$ mm

Number of pairs of teeth in contact

$$n = \frac{\text{Arc of contact}}{\text{Circular pitch}} = \left(\frac{\text{Path of contact}}{\cos\varphi}\right) \times \frac{1}{\pi m}$$

$$= \left(\frac{38.646}{\cos 20°}\right) \times \frac{1}{\pi \times 4} = 3.27$$

Thus, 3 pairs of teeth will always remain in contact whereas for 27% of the time, 4 pairs of teeth will be in contact.

10.16 UNDERCUTTING

Figure 10.28(a) shows a pinion. A portion of its dedendum falls inside the base circle. The profile of the tooth inside the base circle is radial. If the addendum of the mating gear is more than the limiting value, it interferes with the dedendum of the pinion and the two gears are locked.

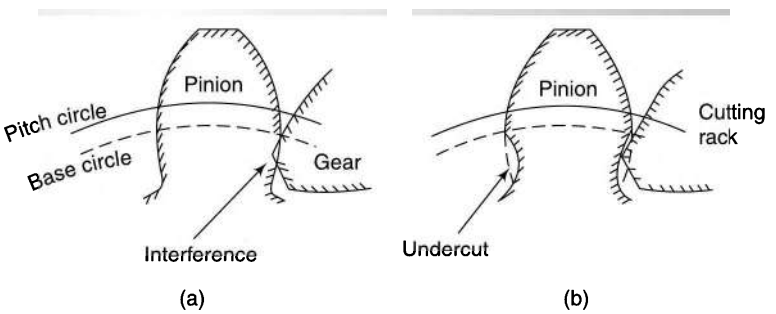

Fig. 10.28

However, if a cutting rack having similar teeth is used to cut the teeth in the pinion, it will remove that portion of the pinion tooth which would have interfered with the gear as shown in Fig. 8.28(b). A gear having its material removed in this manner is said to be *undercut* and the process, *undercutting*. In a pinion with small number of teeth, this can seriously weaken the tooth. However, when the actual gear meshes with the undercut pinion, no interference occurs.

Undercutting will not take place if the teeth are designed to avoid interference.

10.17 COMPARISON OF CYCLOIDAL AND INVOLUTE TOOTH FORMS

The following table compares the two forms of teeth, the cycloidal and the involute:

Table 10.2 *Comparison of cycloidal and involute teeth*

	Cycloidal Teeth	Involute Teeth
(a)	Pressure angle varies from maximum at the beginning of engagement, reduces to zero at the pitch point and again increases to maximum at the end of engagement resulting in less smooth running of the gears.	Pressure angle is constant throughout the engagement of teeth. This results in smooth running of the gears.
(b)	It involves double curve for the teeth, epicycloid and hypocycloid. This complicates the manufacture.	It involves single curve for the teeth resulting in simplicity of manufacturing and of tools.
(c)	Owing to difficulty of manufacture, these are costlier.	These are simple to manufacture and thus are cheaper.
(d)	Exact centre-distance is required to transmit a constant velocity ratio.	A little variation in the centre distance does not affect the velocity ratio.
(e)	Phenomenon of interference does not occur at all.	Interference can occur if the condition of minimum number of teeth on a gear is not followed.
(f)	The teeth have spreading flanks and thus are stronger.	The teeth have radial flanks and thus are weaker as compared to the cycloidal form for the same pitch.
(g)	In this, a convex flank always has contact with a concave face resulting in less wear.	Two convex surfaces are in contact and thus there is more wear.

On careful examination of the above, it can be deduced that the advantages of involute system are more real. Therefore, the use of involute teeth have become almost universal rendering the cyclodial system obsolete.

10.18 HELICAL AND SPIRAL GEARS

In helical and spiral gears, the teeth are inclined to the axis of a gear. They can be *right-handed* or *left-handed,* depending upon the direction in which the helix slopes away from the viewer when a gear is viewed parallel to the axis of the gear. In Fig. 10.29, the gear 1 is a right-handed helical gear whereas 2 is left-handed. The two mating gears have parallel axes and equal helix angle ψ. The contact between two teeth on the two gears is first made at one end which extends through the width of the wheel with the rotation of the gears.

Figure 10.30(a) shows the same two gears when looking from above. Now, if the helix angle of the gear 2 is reduced by a few degrees so that the helix angle of the gear 1 is ψ_1 and that of gear 2 is ψ_2 and it is desired that the teeth of the two gears still mesh with each other tangentially, it is essential to rotate the axis of the gear 2 through some angle as shown in Fig. 10.30(b). Let the angle turned by it be θ which is the angle between the axes of the two gears.

From the geometry of the diagram, $\theta = \psi_1 - \psi_2$.

Thus, this is the case of two skew shafts joined with crossed-helical or spiral gears.

When $\psi_1 = \psi_2$, the helix angle is the same as before. Then $\theta = \psi_1 - \psi_2 = 0$,

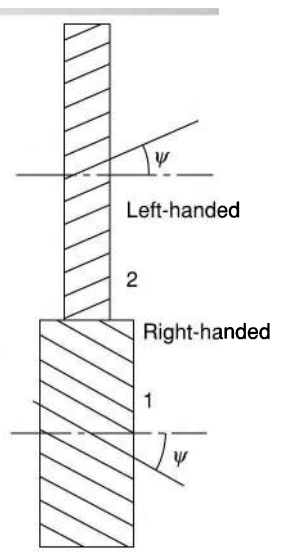

Fig. 10.29

a case of helical gears joining parallel shafts [Fig. 10.30(a)].

When $\psi_2 = 0$, i.e., the helix angle of the gear 2 is made zero, or the gear 2 is a straight spur gear, then $\theta = \psi_1$, i.e., the angle between the axes becomes equal to the helix angle of the gear 1 [Fig. 10.30(c)],

In case the helix angle of gear 2 is made negative, i.e. the teeth are made of the same hand as that of gear 1 (Fig. 10.30(d)]

$\theta = \psi_1 - (-\psi_2) = \psi_1 + \psi_2$

The above discussion leads to the following conclusion:

Angle between the shafts,

$\theta = \psi_1 + \psi_2$ for gears of same hand (10.9)

$= \psi_1 - \psi_2$ for gears of opposite hands (10.10)

In case of helical gears for parallel shafts there is a line contact of the teeth through the width. However, gears for skew shafts have a point contact. This can be demonstrated by having two cylinders. When their axes are parallel, they can have a line contact. But when any of the cylinders is turned through some angle so that their axes are no longer parallel, the contact is reduced to a point. Thus, whereas the helical gears for parallel shafts are considered stronger than the spur gears, the crossed-helical gears (spiral gears) for skew shafts are not used to transmit heavy loads.

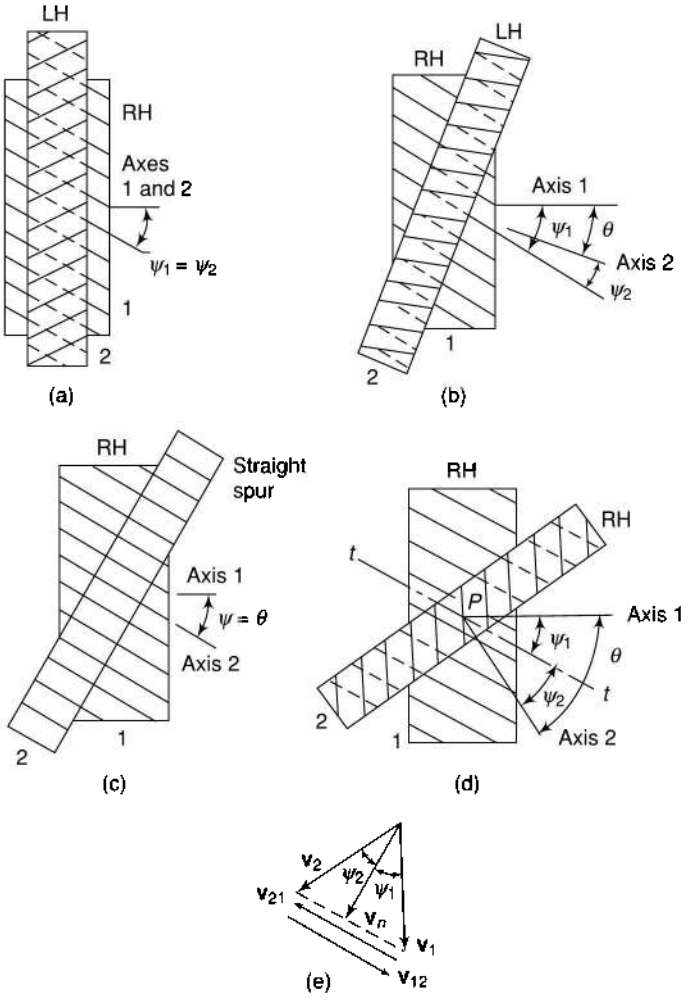

Fig. 10.30

The pitch line velocities v_1 and v_2 of the gears 1 and 2 of Fig. 10.30(d) act in the directions as shown in Fig 10.30(e). The magnitude and direction of v_{12} represent the sliding velocity of the teeth of the gear 1 relative to that of the gear 2 parallel to $t - t$, the tangent to the teeth in contact. This velocity increases with the increase in the angle between the shafts and is not zero even when the contact is at the pitch point.

However, in all cases, the normal components of v_1 and v_2, i.e., the components perpendicular to $t - t$ must be equal.

For helical gears joining parallel shafts, $v_1 = v_2$ in the same direction.

$v_{12} = 0$ or there is no sliding velocity.

If the helix angle of a gear is increased, a gear similar to that shown in Figure 10.31 is obtained. This gives the appearance of a spiral and thus the name.

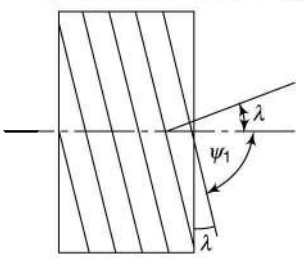

Fig. 10.31

10.19 TERMINOLOGY OF HELICAL GEARS

Refer Fig. 10.32.

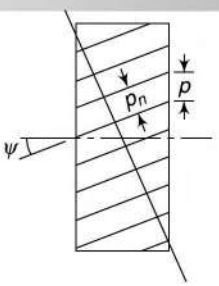

Fig. 10.32

Helix Angle (ψ) It is the angle at which the teeth are inclined to the axis of a gear. It is also known as *spiral angle*.

Circular Pitch (p) It is the distance between the corresponding points on adjacent teeth measured on the pitch circle. It is also known as *transverse circular pitch*.

Normal Circular Pitch (p_n) Normal circular pitch or simply normal pitch is the shortest distance measured along the normal to the helix between corresponding points on the adjacent teeth. The normal circular pitch of two mating gears must be same.

$$P_n = p \cos \psi$$

Also, we have, $p = \pi m$ as for spur gears

$$P_n = \pi m_n$$

and $$m_n = m \cos \psi$$

10.20 VELOCITY RATIO AND CENTRE DISTANCE OF HELICAL GEARS

Velocity Ratio Refer Fig. 10.30(e),

$$v_n = v_1 \cos \psi_1 = v_2 \cos \psi_2$$

or $$\frac{v_2}{v_1} = \frac{\cos \psi_1}{\cos \psi_2}$$

$$VR = \frac{\omega_2}{\omega_1} = \frac{v_2 / r_2}{v_1 / r_1} = \frac{v_2 / d_2}{v_1 / d_1} = \frac{d_1 / v_2}{d_2 / v_1}$$

or $$VR = \frac{d_1}{d_2} \frac{\cos \psi_1}{\cos \psi_2}$$

$$= \frac{m_1 T_1}{m_2 T_2} \frac{\cos \psi_1}{\cos \psi_2}$$

$$= \frac{m_n / \cos \psi_1}{m_n / \cos \psi_2} \frac{T_1}{T_2} \frac{\cos \psi_1}{\cos \psi_2}$$

$$= \frac{T_1}{T_2} \qquad (10.11)$$

Centre Distance Let C be the centre distance between two skew shaft axes which is the shortest distance between them.

$$C = r_1 + r_2 = \frac{1}{2}(d_1 + d_1) = \frac{1}{2}(m_1 T_1 + m_2 T_2)$$

or $$C = \frac{1}{2}\left(\frac{m_n}{\cos \psi_1} T_1 + \frac{m_n}{\cos \psi_2} T_2\right)$$

$$= \frac{m_n}{2}\left(\frac{T_1}{\cos\psi_1} + \frac{T_2}{\cos\psi_2}\right)$$

In case of helical gears for parallel shafts, $\psi_1 = \psi_2 = \psi$

$$C = \frac{m_n}{2\cos\psi}(T_1 + T_2) \tag{10.12}$$

10.21 HELICAL GEAR FORCES AND EFFICIENCY

Like all direct contact mechanisms, the force exerted by a helical gear on its mating gear acts normal to the contacting surfaces if friction is neglected. However, a normal force in case of helical gears has three components. Apart from tangential and radial components which are present in spur gears, a third component parallel to the axis of the shaft of the gear also exists. This is known as the axial or the thrust force component. Figure 10.33 shows the normal force and its components acting on a helical gear. The gear shown is the driven gear and the forces are exerted on it by the driving gear.

Let F_n^t = total normal force
F_t = tangential force
F_a = axial force
F_r = radial force
F_n = normal force in the plane of F_t and F_a
φ = pressure angle
φ_n = normal pressure angle
ψ = helix angle

Then

$$F_n = F_n^t \cos\varphi_n \quad \text{and} \quad F_r = F_n^t \sin\varphi_n$$
$$F_t = F_n \cos\psi \quad \text{and} \quad F_a = F_n \sin\psi$$

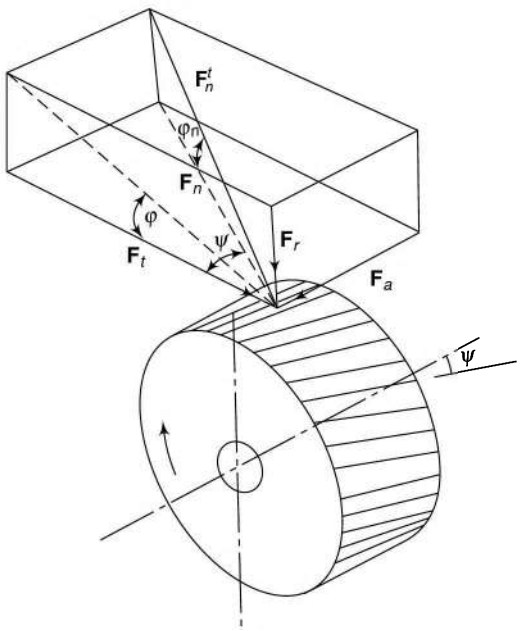

Fig. 10.33

Efficiency of Spiral and Helical Gears

In spiral or crossed helical gears, the sliding action between the surfaces acts chiefly along the tangent to the pitch helix. The friction force is equal to μF_n and acts in a direction opposite to the direction of sliding of the gear surface.

Two mating spiral gears 1 and 2 are shown separately in Figs 10.34(a) and (b) along with the force acting on them. Gear 1 is driving the gear 2.

Let F_{t1} = tangential force acting on the gear wheel 1
F_{t2} = tangential force acting on the gear wheel 2
$F_{n1} = F_{n2} = F_n$ normal reaction force between two surfaces in contact

The direction of the sliding velocity of the gear 2 relative to that of the gear 1, v_{21} has been shown in Fig. 10.34(c). The friction force $\mu\mathbf{F}_{n2}$ acts in the opposite direction. $\mathbf{F}_{n2}$ and $\mu\mathbf{F}_{n2}$ combine into one reaction force $\mathbf{F}_2$ inclined at an angle φ with the normal reaction, where φ is the angle of friction.

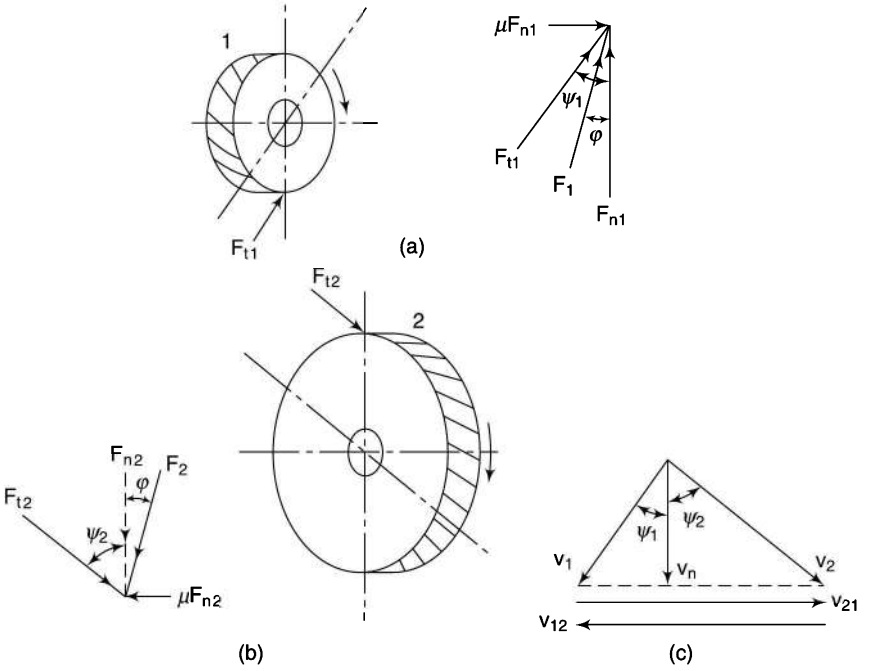

Fig. 10.34

	$F_{t2} = F_2 \cos(\psi_2 + \varphi)$	and	$F_{t1} = F_1 \cos(\psi_1 - \varphi)$
But as	$F_n = F_{n1} = F_{n2}$	and	$\mu F_{n1} = \mu F_{n2}$
	$F_1 = F_2 = F$		
or	$F_{t1} = F \cos(\psi_1 - \varphi)$	and	$F_{t2} = F \cos(\psi_2 + \varphi)$
	Input $= F_{t1} \times v_1$		
	output $= F_{t2} \times v_2$		

Efficiency, $$\eta = \frac{F_{t2} \times v_2}{F_{t1} \times v_1}$$

$$= \frac{\cos(\psi_2 + \varphi)}{\cos(\psi_1 - \varphi)} \frac{\cos\psi_1}{\cos\psi_2} \qquad \left(\frac{v_2}{v_1} = \frac{\cos\psi_1}{\cos\psi_2}\right) \tag{10.13}$$

$$= \frac{2\cos\psi_1 \cos(\psi_2 + \varphi)}{2\cos\psi_2 \cos(\psi_1 - \varphi)}$$

$$= \frac{\cos(\psi_1 + \psi_2 + \varphi) + \cos(\psi_1 - \psi_2 - \varphi)}{\cos(\psi_2 + \psi_1 - \varphi) + \cos(\psi_2 - \psi_1 + \varphi)}$$

$$= \frac{\cos(\theta + \varphi) + \cos(\psi_1 - \psi_2 - \varphi)}{\cos(\theta - \varphi) + \cos[-(\psi_1 - \psi_2 - \varphi)]}$$

$$= \frac{\cos(\theta + \varphi) + \cos(\psi_1 - \psi_2 - \varphi)}{\cos(\theta - \varphi) + \cos(\psi_1 - \psi_2 - \varphi)} \qquad [\text{As } \cos(-\alpha) = \cos\alpha]$$

The numerator and the denominator, each is a sum of two terms, out of which one is common. The expression will be maximum if the common term is maximum.

i.e., $\cos(\psi_1 - \psi_2 - \varphi)$ is maximum or equal to 1.

or $\psi_1 - \psi_2 - \varphi = 0$

or $\psi_1 = \psi_2 + \varphi = (\theta - \psi_1) + \varphi$ $\quad (\theta = \psi_1 + \psi_2)$

or $2\psi_1 = \theta + \varphi$ or $\psi_1 = \dfrac{\theta + \varphi}{2}$

and
$$\eta_{max} = \frac{\cos(\theta + \varphi) + 1}{\cos(\theta - \varphi) + 1} \tag{10.14}$$

Example 10.16 *Two spiral gears have a normal module of 12 mm and the angle between the shaft axes is 60°. The driver has 16 teeth and a helix angle of 25°. If the velocity ratio is 1/2 and the driver and the follower both are left-handed, find the centre distance between the shafts.*

Solution $\psi_1 = 25°$; $m_n = 12$ mm;
$\psi_2 = 60° - 25° = 35°$;
$T_1 = 16$

$$VR = \frac{1}{2} = \frac{N_2}{N_1} = \frac{T_1}{T_2}$$

$$T_2 = \frac{T_1}{VR} = \frac{16}{1/2} = 32$$

$$C = \frac{m_n}{2}\left(\frac{T_1}{\cos\psi_1} + \frac{T_2}{\cos\psi_2}\right)$$

$$= \frac{12}{2}\left(\frac{16}{\cos 25°} + \frac{32}{\cos 35°}\right)$$

or $C = \underline{340.3 \text{ mm}}$

Example 10.17 *The centre distance between two meshing spiral gears is 260 mm and the angle between the shafts is 65°. The normal circular pitch is 14 mm and the gear ratio is 2.5. The driven gear has a helix angle of 35°. Find the*

(i) number of teeth on each wheel
(ii) exact centre distance
(iii) efficiency assuming the friction angle to be 5.5°

Solution $\psi_2 = 35°$ $\quad G = 2.5$
$\psi_1 = 65° - 35° = 30°$ $\quad C = 260$ mm
$p_n = 14$ mm $\quad \varphi = 5.5°$

Let the gear with smaller number of teeth be the driver.

$$G = \frac{T_2}{T_1} = 2.5 \text{ or } T_2 = 2.5T_1$$

$$C = \frac{p_n}{2\pi}\left(\frac{T_1}{\cos\psi_1} + \frac{T_2}{\cos\psi_2}\right) \quad \left(m_n = \frac{p_n}{\pi}\right)$$

$$260 = \frac{14}{2\pi}\left(\frac{T_1}{\cos 30°} + \frac{2.5T_1}{\cos 35°}\right) = 9.373\,T_1$$

or $T_1 = 27.74$

Take $T_2 = \underline{28}$

Then $T_2 = 2.5 \times 28 = \underline{70}$

$$C_{exact} = \frac{14}{2\pi}\left(\frac{28}{\cos 30°} + \frac{70}{\cos 35°}\right)$$

$$= \underline{262.4 \text{ mm}}$$

$$\eta = \frac{\cos(\psi_2 + \varphi)\cos\psi_1}{\cos(\psi_1 - \varphi)\cos\psi_2}$$

$$= \frac{\cos(35° + 5.5°)\cos 30°}{\cos(30° - 5.5°)\cos 35°}$$

$$= \underline{0.883}$$

Example 10.18 *Two left-handed helical gears connect two shafts 60° apart. The normal module is 6 mm. The larger gear has 70 teeth and the velocity ratio is 1/2. The centre distance is 370 mm. Find the helix angles of the two gears.*

Solution $\theta = 60°$ $m_n = 6$ mm
$T_2 = 70$ $C = 370$ mm
$\psi_2 = 60° - \psi_1$

$$VR = \frac{N_2}{N_1} = \frac{T_1}{T_2}$$

or $$T_1 = VR \times T_2 = \frac{1}{2} \times 70 = 35$$

$$C = \frac{m_n}{2}\left[\frac{T_1}{\cos\psi_1} + \frac{T_2}{\cos(60° - \psi_1)}\right]$$

$$370 = \frac{6}{2}\left[\frac{35}{\cos\psi_1} + \frac{70}{\cos(60° - \psi_1)}\right]$$

By trial and error, $\psi_1 = 26°$, $\psi_2 = 34°$

Example 10.19 *The following data relate to two spiral gears in mesh:*
Shaft angle = 90°
Centre distance = 160 mm (approx)
Normal circular pitch = 8 mm
Gear ratio = 3
Friction angle = 5°
For maximum efficiency of the drive, determine the
(i) spiral angles of the teeth
(ii) number of teeth
(iii) centre distance (exact)
(iv) pitch diameters
(v) efficiency

Solution

(i) $\psi_1 = \dfrac{\theta + \varphi}{2}$ For maximum efficiency

$$= \frac{90° + 5°}{2}$$

$= 47.5°$

$\psi_2 = 90° - 47.5° = 42.5°$

(ii) $$C = \frac{p_n}{2\pi}\left(\frac{T_1}{\cos\psi_1} + \frac{T_2}{\cos\psi_2}\right)$$

$$160 = \frac{8}{2\pi}\left(\frac{T_1}{\cos 47.5°} + \frac{3T_1}{\cos 42.5°}\right) = 7.065T_1$$

or $T_1 = 22.65$
Let T_1 to be 23
$T_2 = 3T_1 = 69$

(iii) $$C_{\text{exact}} = \frac{8}{2\pi}\left(\frac{23}{\cos 47.5°} + \frac{69}{\cos 42.5°}\right)$$

$= \underline{162.5 \text{ mm}}$

(iv) $$d_1 = \frac{P_1 T_1}{\pi} = \frac{p_n}{\cos\psi_1}\frac{T_1}{\pi}$$

$$= \frac{8}{\cos 47.5°} \times \frac{23}{\pi} = \underline{86.7 \text{ mm}}$$

$$d_2 = \frac{8}{\cos 42.5°} \times \frac{69}{\pi} = 238.3 \text{ mm}$$

(v) $$\eta_{\max} = \frac{\cos(\theta + \varphi) + 1}{\cos(\theta - \varphi) + 1}$$

$$= \frac{\cos(90° + 5°) + 1}{\cos(90° - 5°) + 1} = \underline{0.84}$$

Example 10.20 *A drive is made up of two spiral gear wheels of the same hand, same diameter and of normal pitch of 14 mm. The centre distance between the axes of the shafts is approximately 150 mm. The speed ratio is 1.6 and the angle between the shafts is 75°. Assuming a friction angle of 6°, determine the*
(i) spiral angle of each wheel
(ii) number of teeth on each wheel
(iii) efficiency of the drive
(iv) maximum efficiency

Solution $\theta = 75°$ $m_n = 14$ mm
$C = 150$ mm $\phi = 6°$
$VR = 1.6$

(i) Let ψ_1 be the spiral angle of the wheel 1.
Then, the spiral angle of the wheel 2, $\psi_2 = 75° - \psi_1$

Now, Velocity ratio, $VR = \dfrac{T_1}{T_2} = 1.6$

(Refer Eq. 10.11)

or $T_1 = 1.6T_2$

Also, $$VR = \frac{d_1 \cos\psi_1}{d_2 \cos\psi_2}$$

$$1.6 = \frac{\cos\psi_1}{\cos\psi_2} \qquad (\text{As } d_1 = d_2)$$

$$\text{or } \cos\psi_1 = 1.6\cos(75^\circ - \psi_1)$$
$$= 1.6(\cos 75^\circ \cos\psi_1 + \sin 75^\circ \sin\psi_1)$$
$$= 1.6(0.2588\cos\psi_1 + 0.9659\sin\psi_1)$$
$$= 0.414\cos\psi_1 + 1.545\sin\psi_1$$
$$0.586\cos\psi_1 = 1.545\sin\psi_1$$
$$\tan\psi_1 = 0.3793$$
$$\psi_1 = \underline{20.8^\circ}$$
$$\text{and} \quad \psi_2 = 75^\circ - 20.8^\circ = \underline{54.2^\circ}$$

(ii) The centre distance,

$$C = \frac{p_n}{2\pi}\left(\frac{T_1}{\cos\psi_1} + \frac{T_2}{\cos\psi_2}\right) \qquad \left(m_n = \frac{p_n}{\pi}\right)$$

$$150 = \frac{14}{2\pi}\left(\frac{1.6T_2}{\cos 20.8} + \frac{T_2}{\cos 54.2}\right) = 7.623\,T_1$$

$$T_2 = 19.68 \text{ say } \underline{20}$$
$$T_1 = 20 \times 1.6 = \underline{32}$$
$$C_{\text{exact}} = \frac{14}{2\pi}\left(\frac{32}{\cos 20.8} + \frac{20}{\cos 54.2}\right)$$
$$= 152.4 \text{ mm}$$

(iii) Efficiency, $\eta = \dfrac{\cos(\psi_2 + \varphi)\cos\psi_1}{\cos(\psi_1 - \varphi)\cos\psi_2}$

$$= \frac{\cos(54.2^\circ + 6^\circ)\cos 20.8^\circ}{\cos(20.8^\circ - 6^\circ)\cos 54.2^\circ}$$
$$= \underline{0.821}$$

(iv) Maximum efficiency,

$$\eta_{\max} = \frac{\cos(\theta + \varphi) + 1}{\cos(\theta - \varphi) + 1} = \frac{\cos(75^\circ + 6^\circ) + 1}{\cos(75^\circ - 6^\circ) + 1}$$
$$= \underline{0.872}$$

10.22 WORM AND WORM GEAR

To accomplish large speed reduction in skew shafts, spiral gears with a small driver and a larger follower are required. Also, the load transmitted through these gears is limited. To transmit a little higher load than with the usual spiral gears, use of worm and worm gears (throated type) can be made [Fig. 10.11(b) and (c)]. Usually, worm and worm gears are used to connect two skew shafts at right angles to each other. The axial length of the worm is increased so that at least one or two threads (teeth) complete the circle on it (Fig. 10.31).

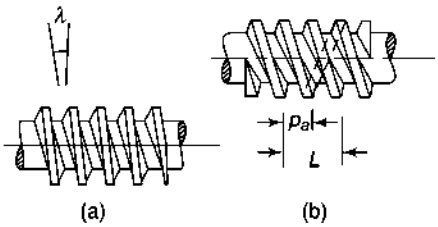

Fig. 10.35

A worm can be a single, double or triple start if one, two or three threads are traversed on the worm for one tooth advancement of the gear wheel. Figures 10.35(a) and (b) show a single start and a double-start worm respectively.

A pair of single-start worm and worm gear

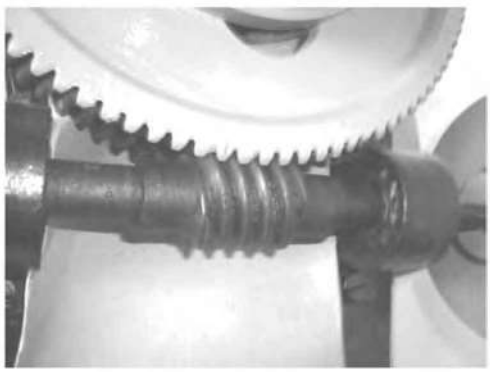

A pair of three-start worm and worm gear

10.23 TERMINOLOGY OF WORM GEARS

Refer Fig. 10.35,

(i) Axial Pitch (p_a) It is the distance between corresponding points on adjacent teeth measured along the direction of the axis.

(ii) Lead (L) The distance by which a helix advances along the axis of the gear for one turn around is known as lead.

In a single helix, the axial pitch is equal to lead. In a double helix, this is one-half the lead, in a triple helix, one third of lead, and so on.

(iii) Lead Angle (λ) It is the angle at which the teeth are inclined to the normal to the axis of rotation. Obviously, the lead angle is the complement of the helix angle.

i.e., $\psi + \lambda = 90°$

In case of worms, the lead angle is very small and the helix angle approaches 90°.

As the shaft axes of worm and worm gear are at 90°,

$$\psi_1 + \psi_2 = 90° \qquad \text{(1 denotes worm)}$$

$$(90° - \lambda_1) + \psi_2 = 90°$$

or $$\lambda_1 = \psi_2$$

i.e., lead angle of worm = helix angle of the gear wheel

Also, p_n of worm = p_n of wheel

$$p_{a1}\cos\lambda_1 = p_2\cos\psi_2$$

but $$\lambda_1 = \psi_2$$

$\therefore$ $$p_{a1} = p_2$$

i.e., axial pitch of worm = circular pitch of wheel

10.24 VELOCITY RATIO AND CENTRE DISTANCE OF WORM GEARS

Velocity Ratio As a worm may be multistart, the velocity is not calculated from the number of teeth.

Assume that a worm rotates through one revolution about its axis. Then the angle turned by it will be 2π.

The lead of the worm is equal to the axial distance advanced by a thread in one revolution of the worm.

The lead is also the distance moved by the pitch circle of the gear wheel. Thus, angle turned by it during the same time will be l/R_2 or $2l/d_2$.

$$VR = \frac{\text{Angle turned by the gear}}{\text{Angle turned by the worm}} = \frac{2l/d_2}{2\pi} = \frac{l}{\pi d_2} \qquad (10.15)$$

Centre Distance

$$C = \frac{m_n}{2}\left(\frac{T_1}{\cos\psi_1} + \frac{T_2}{\cos\psi_2}\right)$$

$$= \frac{m_2\cos\psi_2}{2}\frac{1}{\cos\psi_2}\left(\frac{\cos\psi_2}{\cos\psi_1}.T_1 + T_2\right)$$

$$= \frac{m_2}{2}\left[\frac{\cos\lambda_1}{\cos(90° - \lambda_1)}T_1 + T_2\right] \qquad [\psi_2 = \lambda_1,\ \psi_1 = 90° - \lambda_1]$$

$$= \frac{m_2}{2}\left[\frac{\cos\lambda_1}{\sin\lambda_1}T_1 + T_2\right]$$

$$= \frac{m_2}{2}[T_1 \cot\lambda_1 + T_2] \qquad (10.16)$$

10.25 EFFICIENCY OF WORM GEARS

$$\eta = \frac{\cos(\psi_2+\varphi)\cos\psi_1}{\cos(\psi_1-\varphi)\cos\psi_2} \qquad \text{[Refer Eq. (10.13)]}$$

$$= \frac{\cos(\lambda_1+\varphi)}{\cos[90°-\lambda_1-\varphi]}\frac{\cos(90°-\lambda_1)}{\cos\lambda_1}$$

$$= \frac{\cos(\lambda_1+\varphi)}{\cos[90°-(\lambda_1+\varphi)]}\frac{\sin\lambda_1}{\cos\lambda_1}$$

$$= \frac{\cos(\lambda_1+\varphi)}{\sin(\lambda_1+\varphi)}\tan\lambda_1$$

$$= \frac{\tan\lambda_1}{\tan(\lambda_1+\varphi)} \qquad (10.17)$$

$$\eta_{max} = \frac{\cos(\theta+\varphi)+1}{\cos(\theta-\varphi)+1} = \frac{\cos(90°+\varphi)+1}{\cos(90°-\varphi)+1} \qquad (\theta = 90°)$$

$$= \frac{1-\sin\varphi}{1+\sin\varphi} \qquad (10.17a)$$

If the gear wheel is the driver, it can be deduced that

$$\eta = \frac{\tan(\lambda_1-\varphi)}{\tan\lambda_1}$$

and

$$\eta_{max} = \frac{1-\sin\varphi}{1+\sin\varphi}$$

Example 10.21 *A two-start worm rotating at 800 rpm drives a 26-tooth worm gear. The worm has a pitch diameter of 54 mm and a pitch of 18 mm. If coefficient of frication (μ) is 0.06, find the*

(i) helix angle of worm
(ii) speed of gear
(iii) centre distance
(iv) lead angle for maximum efficiency
(v) efficiency
(vi) maximum efficiency

Solution:

$N_1 = 800$ rpm $\qquad T_2 = 26$

$\mu = \tan\varphi = 0.06 \qquad d_1 = 54$ mm

$\varphi = 3.43°$ (= $\tan^{-1} 0.06$) $\qquad p_1 = 18$ mm

(i) Unwrap one thread of the worm,

$$\tan\lambda_1 = \frac{\text{Lead}}{\text{Pitch circumferece}} = \frac{2p}{\pi d_1}$$

(for two-start worm)

$$\text{or} \quad \tan\lambda_1 = \frac{2\times 18}{\pi\times 54} = 0.212$$

$\lambda_1 = 11.98°$ or $11°59'$

Helix angle $\psi_1 = 90° - \lambda_1 = \underline{78°01'}$

(ii) Pitch of wheel = Axial pitch of worm
= 18 mm

$$\therefore \quad p_2 = \frac{\pi d_2}{T_2}$$

or $\quad 18 = \dfrac{\pi d_2}{26}$

or $\quad d_2 = 149$ mm

$$VR = \frac{\omega_2}{\omega_1} = \frac{N_2}{N_1} = \frac{\text{Lead}}{\pi d_2} = \frac{2 \times 18}{\pi \times 149}$$

or $\quad N_2 = \dfrac{2 \times 18}{\pi \times 149} \times 800 = \underline{61.5 \text{ rpm}}$

Alternatively, $\dfrac{N_2}{N_1} = \dfrac{T_1}{T_2}$

$$N_2 = \frac{2}{26} \times 800 = \underline{61.5 \text{ rpm}}$$

(iii) $C = \dfrac{m_2}{2}(T_1 \cot \lambda_1 + T_2) = \dfrac{p_2}{2\pi}(T_1 \cot \lambda_1 + T_2)$

$$= \frac{18}{2\pi}(2 \cot 11.98° + 26) = \underline{101.4 \text{ mm}}$$

(iv) For maximum efficiency, $\psi_1 = \dfrac{\theta + \varphi}{2}$

or $\quad 90° - \lambda_1 = \dfrac{90° + \varphi}{2}$

or $\quad \lambda_1 = 45° - \dfrac{3.43°}{2}$

$= 43.29°$ or $\underline{43°18'}$

(v) $\eta = \dfrac{\tan \lambda_1}{\tan(\lambda_1 + \varphi)}$

$$= \frac{\tan 11.98°}{\tan(11.98° + 3.43°)} \quad \ldots(\tan^{-1} 0.06 = 3.43°)$$

$= \underline{0.77}$

(vi) $\eta_{max} = \dfrac{1 - \sin \varphi}{1 + \sin \varphi} = \dfrac{1 - \sin 3.43°}{1 + \sin 3.43°} = \underline{0.887}$

10.26 BEVEL GEARS

To have a gear drive between two intersecting shafts, bevel gears are used. Kinematically, bevel gears are equivalent to rolling cones. Some of the common terms used in bevel gears are illustrated in Fig.10.36(a).

Let γ_g, γ_p = pitch angles of gear and pinion respectively

r_g, r_p = pitch radii of gear and pinion respectively.

The pitch cones for two mating external bevel gears are shown in Fig.10.36(b).

We have,

$$\sin \gamma_g = \frac{r_g}{OP} = \frac{r_g}{r_p / \sin \gamma_p} = \frac{r_g}{r_p} \sin(\theta - \gamma_g)$$

or $\sin \gamma_g = \dfrac{r_g}{r_p}(\sin \theta \cos \gamma_g - \cos \theta \sin \gamma_g)$

Dividing both sides by $\cos \gamma_g$,

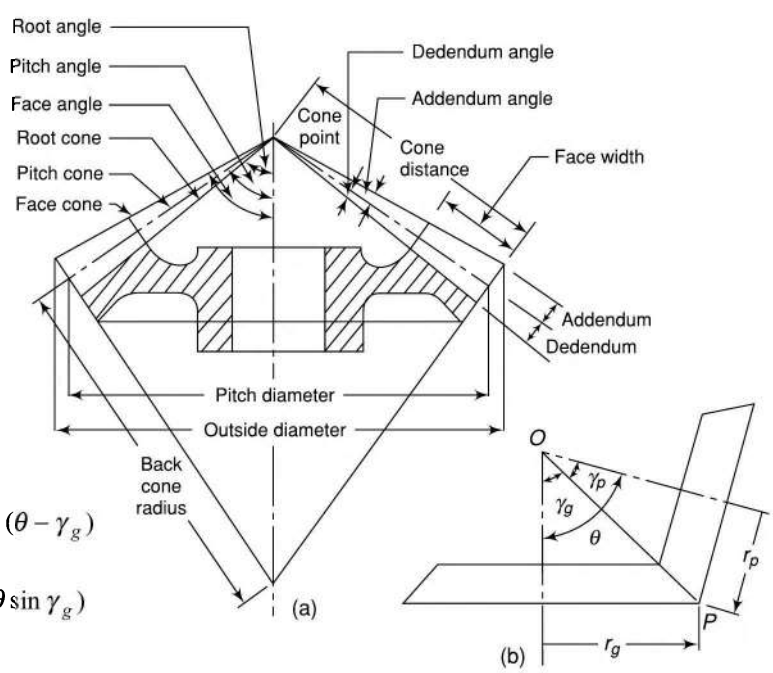

Fig. 10.36

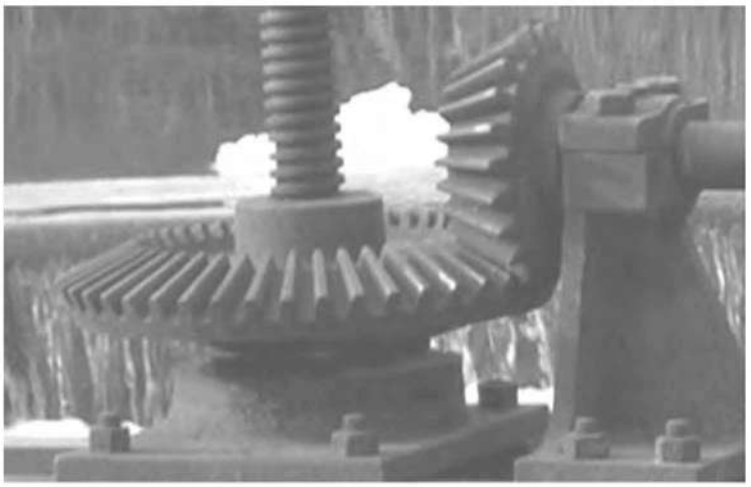

A pair of straight bevel gears

Gear mechanism of a drilling machine showing the use of a pair of bevel gears

$$\tan\gamma_g = \frac{r_g}{r_p}(\sin\theta - \cos\theta\tan\gamma_g)$$

or
$$\frac{r_p}{r_g}\tan\gamma_g = \sin\theta - \cos\theta\tan\gamma_g$$

$$\tan\gamma_g = \frac{\sin\theta}{\dfrac{r_p}{r_g} + \cos\theta}$$

As
$$v_p = \omega_g r_g = \omega_p r_p \quad \text{or} \quad \frac{r_p}{r_g} = \frac{\omega_g}{\omega_p}$$

$\therefore$
$$\tan\gamma_g = \frac{\sin\theta}{\dfrac{\omega_g}{\omega_p} + \cos\theta} \tag{10.18}$$

Similarly,
$$\tan\gamma_p = \frac{\sin\theta}{\dfrac{\omega_p}{\omega_g} + \cos\theta} \tag{10.19}$$

Example 10.22 *A pair of bevel gears is mounted on two intersecting shafts whose shaft angles are at 72° to each other. The velocity ratio of the gears is 2. Find the pitch angles.*

Solution As the velocity ratio is more than 1, the gear is the driver,

$$\tan\gamma_g = \frac{\sin\theta}{\dfrac{\omega_g}{\omega_p} + \cos\theta} = \frac{\sin 72°}{\dfrac{1}{2} + \cos 72°} = 1.176$$

$$\gamma_g = 49.61° \quad \text{or} \quad 49°37'$$

$$\tan\gamma_p = \frac{\sin\theta}{\frac{\omega_p}{\omega_g} + \cos\theta} = \frac{\sin 72°}{2 + \cos 72°} = 0.412$$

$$\gamma_p = 22.39° \quad \text{or} \quad \underline{22°23'}$$

As a check, $\gamma_g + \gamma_p = 49°37' + 22°23' = 72°$

Summary

1. Gears are used to transmit motion from one shaft to another. They use no intermediate link or connector and transmit the motion by direct contact.
2. The speeds of two discs rolling together without slipping are inversely proportional to the radii of the discs.
3. Rotary motion between two parallel shafts is equivalent to the rolling of two cylinders, the motion between two intersecting shafts is equivalent to the rolling of two cones and the motion between two skew shafts is equivalent to the rolling of two hyperboloids with sliding.
4. Spur gears have straight teeth parallel to the axes and thus are not subjected to axial thrust due to tooth load.
5. Spur rack is a special case of a spur gear where it is made of infinite diameter so that the pitch surface is a plane.
6. In helical gears, the teeth are curved, each being helical in shape. Two mating gears have the same helix angle, but have teeth of opposite hands.
7. Axial thrust which occurs in case of single-helical gears is eliminated in double-helical gears.
8. When teeth formed on the cones are straight, the gears are known as *straight bevel* and when inclined, they are known as *spiral* or *helical bevel*.
9. Worm gear is a special case of a spiral gear in which the larger wheel, usually, has a hollow or concave shape such that a portion of the pitch diameter of the other gear is enveloped on it.
10. *Pitch circle* is the circle corresponding to a section of the equivalent pitch cylinder by a plane normal to the wheel axis.
11. *Pitch point* is the point of contact of two pitch circles.
12. *Circular pitch* is the distance measured along the circumference of the pitch circle from a point on one tooth to the corresponding point on the adjacent tooth.
13. *Module* is the ratio of the pitch diameter in mm to the number of teeth.
14. *Pressure angle* or *angle of obliquity* is the angle between the pressure line and the common tangent to the pitch circles.
15. Locus of the point of contact of two mating teeth from the beginning of engagement to the end of engagement is known as the *path of contact* or the *contact length.*
16. Locus of a point on the pitch circle from the beginning to the end of engagement of two mating gears is known as *arc of contact*.
17. The law of gearing states that for constant angular velocity ratio of the two gears, the common normal at the point of contact of the two mating teeth must pass through the pitch point.
18. Common forms of teeth that satisfy the law of gearing are *cycloidal* profile teeth and *involute* profile teeth.
19. Owing to the ease of standardization and manufacture, and low cost of production, the use of *involute* teeth has become universal by entirely superseding the *cycloidal* shape.
20. The gears are interchangeable if they are standard ones.
21. Path of contact = path of approach + path of recess

$$= [\sqrt{R_a^2 - R^2\cos^2\varphi} - R\sin\varphi]$$
$$+ [\sqrt{r_a^2 - r^2\cos^2\varphi} - r\sin\varphi]$$

22. Art of contact $= \dfrac{\text{Path of contact}}{\cos\varphi}$
23. Mating of two non-conjugate (non-involute) teeth is known as *interference* because the two teeth do not mesh properly and rough action and binding occurs.
24. The minimum number of teeth on the wheel for the given values of the gear ratio, the pressure angle and the addendum coefficient a_w is given by

$$T = \frac{2a_w}{\sqrt{1 + \frac{1}{G}\left(\frac{1}{G} + 2\right)\sin^2\varphi - 1}}$$

25. A gear having its material removed to avoid interference is said to be *undercut* and the process, *undercutting*.
26. *Helix angle* is the angle at which the teeth are inclined to the axis of a gear.
27. *Axial pitch* is the distance between corresponding points on adjacent teeth measured along the direction of the axis.
28. *Lead* is the distance by which a helix advances along the axis of the gear for one turn around.
29. Maximum efficiency of worm gear

$$\eta_{max} = \frac{1 - \sin\varphi}{1 + \sin\varphi}$$

Exercises

1. What type of gears are used for parallel, intersecting and skew shafts? Explain.
2. Give a detailed classification of gears.
3. What is the difference between double-helical and herringbone gears?
4. What is a worm and worm wheel? Where is it used?
5. Define the terms:
   (i) Pitch circle
   (ii) Pitch diameter
   (iii) Pitch point
   (iv) Circular pitch
   (v) Module
6. Explain the terms addendum and dedendum. What is clearance?
7. Sketch two teeth of a gear and show the following: face, flank, top land, bottom land, addendum, dedendum, tooth thickness, space width, face width and circular pitch.
8. What is pressure line and pressure angle of a gear?
9. State and derive the law of gearing.
10. Deduce an expression for velocity of sliding in a gear drive.
11. What are the main tooth profiles of gear teeth which fulfill the law of gearing? Compare them.
12. Make a comparison of cycloidal and involute tooth forms.
13. What is standard system of gears? How doe it ensure interchangeability of gears?
14. What is path of contact? Derive the relation for its magnitude.
15. Define arc of contact and deduce the expression to find its magnitude.
16. How do you find the number of teeth in contact of two mating gears?
17. What is meant by interference in involute gears? Explain.
18. Derive a relation for minimum number of teeth on the gear wheel and the pinion to avoid interference.
19. Find the minimum number of teeth on a pinion of standard addendum and 20° pressure angle to avoid interference between a rack and pinion.
20. What do you mean by undercutting of gears?
21. How do you differentiate between left-handed and right-handed helical or spiral gears?
22. Define the terms related to helical gears: helix angle, circular pitch, normal circular pitch.
23. Find relations to determine velocity ratio and centre distance of helical gears.
24. Deduce expression for the maximum efficiency of spiral gears.
25. Define the terms related to worm and worm gears: axial pitch, lead and lead angle.
26. How are the centre distance and efficiency of worm gears found?
27. Find relations to calculate the pitch angles of bevel gears.
28. A reduction gear supported on bearings on either side transmits 90 kW of power. The pinion has a pitch circle diameter of 180 mm and rotates at 600 rpm. Determine the maximum force applied due to power transmitted if the pressure angle of the involute teeth is 20°.

    (16.937 kN)
29. The velocity ratio of two spur gears in mesh is 0.4 and the centre distance is 75 mm. For a module of 1.2 mm, find the number of teeth of the gears. What will be the pitch line velocity if the pinion speed is 800 rpm? Also, find the speed of the gear wheel.

    (36,90; 1810 mm/s; 320 rpm)
30. A spur gear has 30 teeth and a module of 1.4 mm. It rotates at 360 rpm. Determine its circular pitch and pitch line velocity.

    (4.4 mm; 791.7 mm/s)
31. Two meshing spur gears with 20° pressure angle have a module of 4 mm. The centre distance is 220 mm and the number of teeth on the pinion is 40. To what value should the centre distance be increased

so that the pressure angle is increased to 22°?

(222 mm)

32. A pinion has 24 teeth and drives a gear with 64 teeth. The teeth are of involute type with 20° pressure angle. The addendum and the module are 8 mm and 10 mm respectively. Determine path of contact, arc of contact and the contact ratio.

(41.08 mm, 43.72, 1.39)

33. Two gears in mesh have a module of 10 mm and a pressure angle of 25°. The pinion has 20 teeth and the gear has 52. The addendum on both the gears is equal to one module. Determine the
    (i) number of pairs of teeth in contact
    (ii) angles of action of the pinion and the wheel
    (iii) ratio of the sliding velocity to the rolling velocity at the pitch point and at the beginning and end of engagement

(1.475; δ_p = 26°36′, δ_g = 10°13′; zero, 0.304, 0.278)

34. The number of teeth on the gear and the pinion of two spur gears in mesh are 30 and 18 respectively. Both the gears have a module of 6 mm and a pressure angle of 20°. If the pinion rotates at 400 rpm, what will be the sliding velocity at the moment the tip of the tooth of pinion has contact with the gear flank? Take addendum equal to one module. Also, find the maximum velocity of sliding.

(908 mm/s; 981.5 mm/s)

35. Two 20° involute spur gears have a module of 6 mm. The larger wheel has 36 teeth and the pinion has 16 teeth. If the addendum be equal to one module, will the interference occur? What will be the effect if the number of teeth on the pinion is reduced to 14?

(No; interference occurs)

36. The addendum on each wheel of two mating gears is to be such that the line of contact on each side of the pitch point is half the maximum possible length. The number of teeth on the two gears is 24 and 48. The teeth are of 20° pressure angle involute with a module of 12 mm. Determine the addendum for the pinion and the gear. Also, find the arc of contact and the contact ratio.

(23.4 mm, 9.3 mm, 78.6 mm, 2.08)

37. The following data refer to two meshing gears having 20° involute teeth:
    Number of teeth of gear wheel = 52
    Number o teeth of pinion =20
    Speed of pinion = 360 rpm
    Module = 8 mm
    If the addendum of each gear is such that the path of approach and path of recess are half of their maximum possible values, determine the addendum for the gear and the pinion and the length of arc of contact.

(5.07 mm; 18.04 mm; 52.4 mm)

38. Determine the minimum number of teeth and the arc of contact (in terms of module) to avoid interference in the following cases:
    (a) Gear ratio is unity.
    (b) Gear ratio is 3.
    (c) Pinion gears with a rack.
    The addendum of the teeth is 0.88 module and the power component is 0.94 times the normal thrust.

(11, 3.96 m; 14, 4.48 m; 16, 4.24 m)

39. Two 20° involute spur gears having a velocity ratio of 2.5 mesh externally. The module is 4 mm and the addendum is equal to 1.23 module. The pinion rotates at 150 rpm. Find the
    (i) minimum number of teeth on each wheel to avoid interference
    (ii) number of pairs of teeth in contact.

(45, 18; 1.95)

40. If the angle of obliquity of a pair of gear wheels is 20°, and the arc of approach or recess not less than the pitch, what will be the least number of teeth on the pinion?

(18)

41. Two 20° full-depth involute spur gears having 30 and 48 teeth are in mesh. The pinion rotates at 800 rpm. The module is 4 mm. Find the sliding velocities at the engagement and at the disengagement of a pair of teeth and the contact ratio. If the interference is just avoided, find (i) the addenda on the wheel and the pinion, (ii) the path of contact, (iii) the maximum velocity of sliding at engagement and disengagement of a pair of teeth, and (iv) contact ratio.

(8.8 mm, 17.6 mm; 53.35 mm; 2.934 m/s, 4.695 m/s; 4.52)

42. A rack is driven by a pinion having 24 involute teeth and a 140 mm pitch circle diameter. The addendum of both pinion and the rack is 6 mm. Determine the least pressure angle which can be used to avoid interference. For this pressure angle, find the minimum number of teeth in contact at a time.

(17.02°, 2.11)

43. The centre distance between two meshing spiral gears is 150 mm and the angle between the shafts is 60°. The gear ratio is 2 and the normal circular pitch is 10 mm. The driven gear has a helix angle of 25°, determine the

(i) number of teeth on each wheel
(ii) exact centre distance
(iii) efficiency if the friction angle is 4°

(28, 56; 152.7 mm; 0.92)

44. Two right-handed helical gears connect two shafts 70° apart. The larger gear has 50 teeth and the smaller has 20. If the centre distance is 167 mm, determine the helix angle of the gears. The normal module is 4 mm.

(28°; 42°)

45. The angle between two shafts is 90°. They are joined by two spiral gears having a normal circular pitch of 6 mm and a gear ratio of 2. if the approximate distance between the shafts is 200 mm and the friction angle is 6°, determine the following for the maximum efficiency of the drive:
(a) Number of teeth
(b) Centre distance (exact)
(c) Pitch diameters
(d) Efficiency

(50, 100; 199.85 mm; 142.7 mm, 257 mm; 0.81)

46. A three-start worm has a pitch diameter of 80 mm and a pitch of 20 mm. It rotates at 600 rpm and drives a 40-tooth worm gear. If coefficient of friction is 0.05, find the
(i) helix angle of the worm
(ii) speed of the gear
(iii) centre distance
(iv) efficiency and maximum efficiency

(76°56′; 45 rpm; 167.3 mm; 0.817; 0.905)

47. Two meshing bevel gears are mounted on two intersecting shafts, the angle between the shafts being 48°. The velocity ratio of the gears is 2.4. Determine the pitch angles.

(34.39°, 13.61°)

11 GEAR TRAINS

Introduction

A gear train is a combination of gears used to transmit motion from one shaft to another. It becomes necessary when it is required to obtain large speed reduction within a small space. The following are the main types of gear trains:

1. Simple gear train
2. Compound gear train
3. Reverted gear train
4. Planetary or epicyclic gear train

In *simple* gear trains, each shaft supports one gear. In a *compound* gear train, each shaft supports two gear wheels except the first and the last. In a *reverted* gear train, the driving and the driven gears are coaxial or coincident. In all these three types, the axes of rotation of the wheels are fixed in position and the gears rotate about their respective axes. However, it is also possible that in a gear train, the axes of some of the wheels are not fixed but rotate around the axes of other wheels with which they mesh. Such trains are known as *planetary* or *epicyclic* gear trains. Epicyclic gear trains are useful to transmit very high velocity ratios with gears of smaller sizes in a lesser space.

11.1 SIMPLE GEAR TRAIN

A series of gears, capable of receiving and transmitting motion from one gear to another is called a simple gear train. In it, all the gear axes remain fixed relative to the frame and each gear is on a separate shaft (Fig. 11.1).

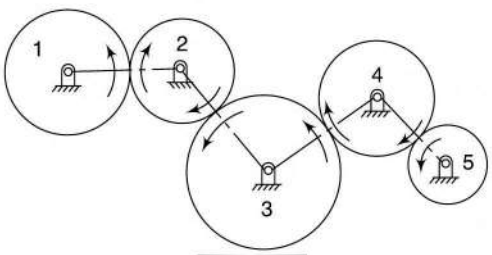

Fig. 11.1

In a simple gear train we can observe the following:

1. Two external gears of a pair always move in opposite directions.
2. All odd-numbered gears move in one direction and all even-numbered gears in the opposite direction. For example, gears 1, 3, 5, etc, move in the counter-clockwise direction.
3. *Speed ratio*, the ratio of the speed of the driving to that of the driven shaft, is negative when the input and the output gears rotate in the opposite directions and it is positive when the two rotate in the same direction. The reverse of the speed ratio is known as the *train value* of the gear train.
4. All the gears can be in a straight line or arranged in a zig-zag manner. A simple gear train can also have bevel gears.

   Let T = number of teeth on a gear
   N = speed of a gear in rpm.

Refer Fig. 11.1.

$$\frac{N_2}{N_1} = \frac{T_1}{T_2} \qquad \left[\text{Also } \frac{\omega_2}{\omega_1} = \frac{2\pi N_2}{2\pi N_1} = \frac{N_2}{N_1}\right]$$

and
$$\frac{N_3}{N_2} = \frac{T_2}{T_3}, \frac{N_4}{N_3} = \frac{T_3}{T_4} \text{ and } \frac{N_5}{N_4} = \frac{T_4}{T_5}$$

Multiplying,

$$\frac{N_2}{N_1} \times \frac{N_3}{N_2} \times \frac{N_4}{N_3} \times \frac{N_5}{N_4} = \frac{T_1}{T_2} \times \frac{T_2}{T_3} \times \frac{T_3}{T_4} \times \frac{T_4}{T_5}$$

or

$$\text{Train value } \frac{N_5}{N_1} = \frac{T_1}{T_5} = \frac{\text{number of teeth on driving gear}}{\text{number of teeth on driven gear}}$$

$$\text{Speed ratio} = \frac{1}{\text{train value}}$$

or
$$\frac{N_1}{N_5} = \frac{T_5}{T_1} \tag{11.1}$$

Thus, it is seen that the intermediate gears have no effect on the speed ratio and, therefore, they are known as *idlers*.

11.2 COMPOUND GEAR TRAIN

When a series of gears are connected in such a way that two or more gears rotate about an axis with the same angular velocity, it is known as compound gear train. In this type, some of the intermediate shafts, i.e., other than the input and the output shafts, carry more than one gear as shown in Fig. 11.2.

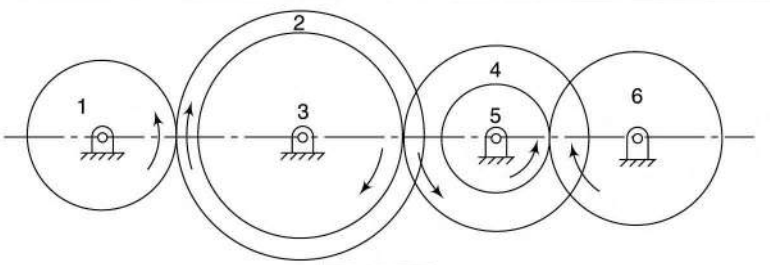

Fig. 11.2

If the gear 1 is the driver then

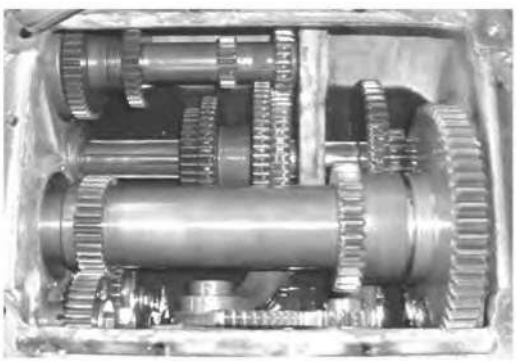

Gear box of a lathe consisting of compound gears

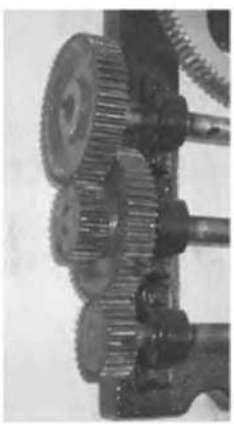

A compound gear train

$$\frac{N_2}{N_1} = \frac{T_1}{T_2}, \quad \frac{N_4}{N_3} = \frac{T_3}{T_4} \text{ and } \frac{N_6}{N_5} = \frac{T_5}{T_6}$$

or

$$\frac{N_2}{N_1} \times \frac{N_4}{N_3} \times \frac{N_6}{N_5} = \frac{T_1}{T_2} \times \frac{T_3}{T_4} \times \frac{T_5}{T_6}$$

or

$$\frac{N_2}{N_1} \times \frac{N_4}{N_2} \times \frac{N_6}{N_4} = \frac{T_1}{T_2} \times \frac{T_3}{T_4} \times \frac{T_5}{T_6}$$

$$\frac{N_6}{N_1} = \frac{T_1}{T_2} \frac{T_3}{T_4} \frac{T_5}{T_6} \tag{11.2}$$

or

$$\text{Train value} = \frac{\text{product of number of teeth on driving gears}}{\text{product of number of teeth on driven gears}}$$

Example 11.1 *A compound gear train shown in Fig. 11.3 consists of compound gears B-C and D-E. All gears are mounted on parallel shafts. The motor shaft rotating at 800 rpm is connected to the gear A and the output shaft to the gear F. The number of teeth on gears A, B, C, D, E and F are 24, 56, 30, 80, 32 and 72 respectively. Determine the speed of the gear F.*

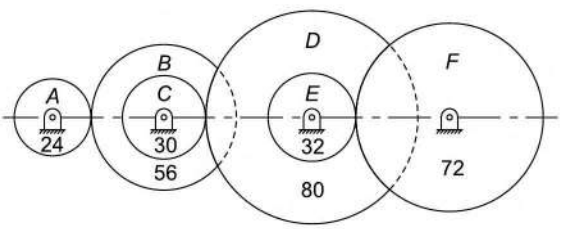

Fig. 11.3

Solution

$$\frac{N_F}{N_A} = \frac{T_A}{T_B} \frac{T_C}{T_D} \frac{T_E}{T_F} = \frac{24}{56} \times \frac{30}{80} \times \frac{32}{72}$$

$= 0.07143$ or $N_F = 0.07143 \times 800 = 57.14$ rpm

11.3 REVERTED GEAR TRAIN

If the axes of the first and the last wheels of a compound gear coincide, it is called a reverted gear train. Such an arrangement is used in clocks and in simple lathes where *back gear* is used to give a slow speed to the chuck.

Referring Fig. 11.4,

$$\frac{N_4}{N_1} = \frac{\text{product of number of teeth on driving gears}}{\text{product of number of teeth on driven gears}}$$

$$\frac{T_1}{T_2} \frac{T_3}{T_4} \tag{11.3}$$

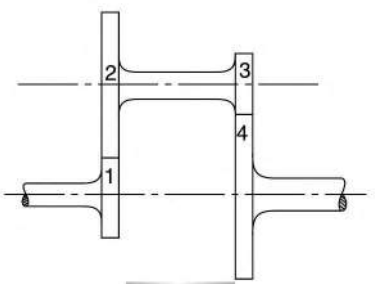

Fig. 11.4

Also, if r is the pitch circle radius of a gear,

$$r_1 + r_2 = r_3 + r_4 \tag{11.4}$$

Example 11.2 *A reverted gear train shown in Fig. 11.4 is used to provide a speed ratio of 10. The module of gears 1 and 2 is 3.2 mm and of gears 3 and 4 is 2 mm. Determine suitable numbers of teeth for each gear. No gear is to have less than 20 teeth. The centre distance between shafts is 160 mm.*

Solution Let us assume that the speed ratio of the pair of gears 1 and 2 = 2.5 or $\frac{N_1}{N_2} = \frac{T_2}{T_1} = 2.5$

and speed ratio of the pair of gears 3 and 4 = 4 or

$$\frac{N_3}{N_4} = \frac{T_4}{T_3} = 4$$

Now, $r_1 + r_2 = r_3 + r_4 = 160$

$$\text{or } \frac{m_1T_1}{2} + \frac{m_2T_2}{2} = 160$$

$$\text{and } \frac{m_3T_3}{2} + \frac{m_4T_4}{2} = 160$$

or $3.2(T_1 + T_2) = 320$ and $2(T_3 + T_4) = 320$
or $T_1 + T_2 = 100$ and $T_3 + T_4 = 160$
or $T_1 + 2.5T_1 = 100$ and $T_3 + 4T_3 = 160$
or $T_1 = 28.57$ say 28 and $T_3 = 32$

To ensure the same centre distance between two sets of gears,

$T_2 = 100 - 28 = 72$ and $T_4 = 160 - 32 = 128$

Exact velocity ratio

$$= \frac{T_1}{T_2}\frac{T_3}{T_4} = \frac{28 \times 32}{72 \times 128} = 10.29$$

If number of teeth on the gear 1 are taken as 29 then $T_2 = 100 - 29 = 71$

Exact velocity ratio

$$= \frac{T_1}{T_2}\frac{T_3}{T_4} = \frac{29 \times 32}{71 \times 128} = 9.79$$

11.4 PLANETARY OR EPICYCLIC GEAR TRAIN

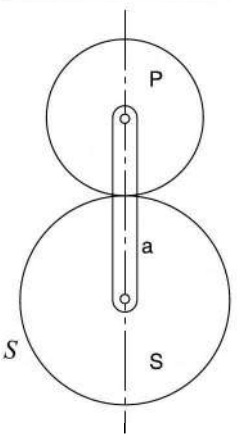

Fig. 11.5

A gear train having a relative motion of axes is called a *planetary* or an *epicyclic gear train* (or simply epicyclic gear or train). In an epicyclic train, the axis of at least one of the gears also moves relative to the frame.

Consider two gear wheels *S* and *P*, the axes of which are connected by an arm *a* (Fig. 11.5). If the arm *a* is fixed, the wheels *S* and *P* constitute a simple train. However, if the wheel *S* is fixed so that the arm can rotate about the axis of *S*, the wheel *P* would also move around *S*. Therefore, it is an epicyclic train.

Usually, the wheel *P* is known as the *epicyclic wheel*. The term epicyclic emerges from the fact that the wheel *P* rolls outside another wheel and traces an epicyclic path. It is also possible that the fixed wheel is annular and another wheel rolls inside it. In that case, the path traced will be a hypocycloid. However, it has become customary to call all gears, in which one of the axes rotates about a fixed axis, as epicyclic gears.

Large speed reductions are possible with epicyclic gears and if the fixed wheel is annular, a more compact unit could be obtained. Important applications of epicyclic gears are in transmission, computing devices, and so on.

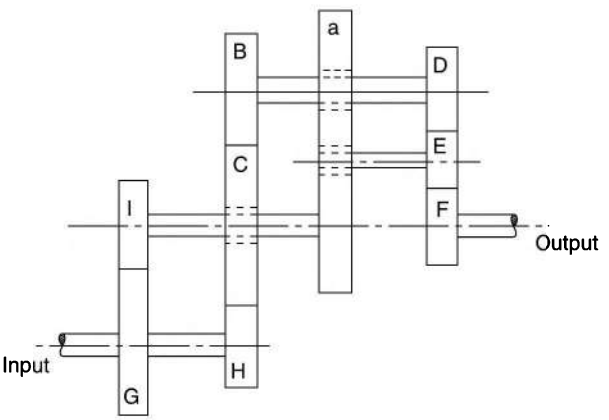

Fig. 11.6

In an epicyclic gear, one wheel is, usually, fixed as in the above case. However, it is not necessary at all and the wheel S can have rotations in any direction about its axis, i.e., clockwise or counter-clockwise. Figure 11.6 shows an epicyclic gear with no fixed wheel. The epicyclic gear consists of wheels B, C, D, E and F and the arm a. Wheels G and H are merely the drivers; G drives the arm a through the wheel I whereas H drives the wheel C.

In general, gear trains have two degrees of freedom. This means to obtain a controlled motion of the output, the train must have two inputs. In Fig. 11.6, two inputs, to the wheel C and the arm a result in a definite motion of the wheel F or of the output shaft. However, number of inputs can be reduced to one, if one wheel of the train is fixed. That amounts to reducing the speed of that gear wheel to zero.

In dealing with epicyclic gears, distinction must be made between wheels which are part of the epicyclic train and those which are not. In the gear train of Fig. 11.6, G and H cannot be the parts of the epicyclic train. Also, the speed of the arm a will be the same as that of the wheel I.

11.5 ANALYSIS OF EPICYCLIC GEAR TRAIN

Epicyclic trains usually have complex motions. Therefore, comparatively simple methods are used to analyse them which do not require accurate visualization of the motions.

Refer Fig. 11.5 and assume that the arm a is fixed. Turn S through x revolutions in the clockwise direction. Assuming clockwise motion of a wheel as positive and counter-clockwise as negative,

revolutions made by $a = 0$ (Arm a fixed)

revolutions made by $S = x$

revolutions made by $P = -(T_s/T_p)x$

Now, if the mechanism is locked together and turned through a number of revolutions, the relative motions between a, S and P will not alter. Let the locked system be turned through y revolutions in the clockwise direction. Then

revolutions made by $a = y$

revolutions made by $S = y + x$

revolutions made by $P = y - \left(\dfrac{T_s}{T_p}\right)x$

This implies that if the arm a turns through y revolutions and S through $(y + x)$ revolutions in the same direction then P will rotate through $[y - (T_s/T_p)x]$ revolutions in space or relative to the fixed axis of S. Thus, if revolutions made by any of the two elements are known, x and y can be solved and the revolutions made by the third can be determined. Thus, the procedure can be summarized as follows:

1. Lock the arm and assume the other wheels free to rotate.
2. Turn any convenient gear through one revolution in the clockwise direction and record the number of revolutions made by each of the other wheels.
3. Multiply all the above recordings by x and write the same in the second row. This is equivalent to the statement that the chosen wheel is given x revolutions in the clockwise direction keeping the arm fixed.
4. Add y to all the quantities in the second row and make the recordings in the third row. This amounts to the fact that by locking the whole system, it is turned through y revolutions in the clockwise direction. Thus, the arm makes y revolutions, the chosen wheel $(y + x)$ revolutions, and so on.
5. Apply the given conditions and find the values of x and y. Having known x and y, the revolutions made by any of the wheels can be known.

   The above procedure is also illustrated by the Table 11.1 for Fig. 11.5.

Table 11.1

Line	Action	Revs. of a	Revs. of S	Revs. of P
1.	a fixed, $S + 1$ rev.	0	1	$-\dfrac{T_S}{T_P}$
2.	a fixed, $S + x$ rev.	0	x	$-\dfrac{T_S}{T_P}x$
3.	Add y	y	$y + x$	$y - \dfrac{T_S}{T_P}x$

Note that the number of revolutions of the wheel P given in the third row of the table is the number of revolutions in space or relative to the fixed axis of S and not about its own axis.

Consider a system shown in Fig. 11.7 in which a is an arm which can rotate about a fixed axis O and P is a wheel which has its axis at the other end of a. For the moment, assume the wheel P to be fixed to the arm a. Now turn the arm through 1/4 revolution, i.e., from the position 1 to the position 2. It will be observed that the wheel P has also turned through 1/4 revolution. But the rotation of P is not about its own axis, as it is fixed to the arm. Similarly, it can be seen that P also rotates through one revolution as the arm turns through one revolution. However, the rotation of P is in space or about the axis of rotation of the arm and not about its own axis. Thus, if the arm makes y revolutions about O, the wheel P also rotates through y revolutions. This suggests that the number of revolutions of P about its own axis can be obtained by subtracting the number of revolutions of the arm from the total number of revolutions of P, or

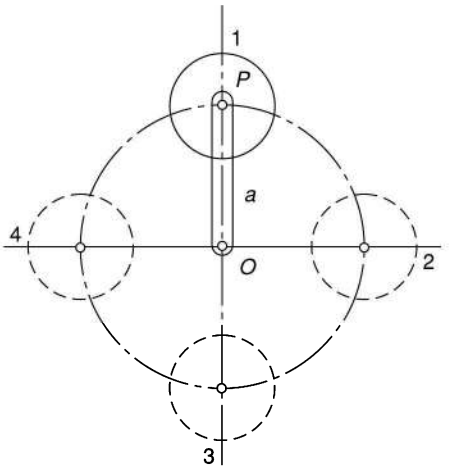

Fig. 11.7

Rev. of P about its own axis = total revs. about axis of arm – revs. of the arm

$$= \left(y - \frac{T_S}{T_P}x\right) - y$$

$$= -\frac{T_S}{T_P}x \tag{11.5}$$

Relative Velocity Method

Angular vel. of S = angular vel. of S rel. to a + angular vel. of a

or $\omega_s = \omega_{sa} + \omega_a$

or $N_s = N_{sa} + N_a$

Similarly, $N_P = -N_{Pa} + N_a$ (N_s and N_p are to be in opposite directions)

$\therefore$ $N_{sa} = N_s - N_a$

and $N_{Pa} = N_a - N_p$

or $$\frac{N_{sa}}{N_{Pa}} = \frac{N_s - N_a}{N_a - N_p}$$

or
$$\frac{T_P}{T_s} = -\frac{N_s - N_a}{N_P - N_a} \tag{11.6}$$

Usually, T_P/T_s and out of N_s, N_a and N_P, two are known and the third is calculated.

Example 11.3 *An epicyclic gear train consists of an arm and two gears A and B having 30 and 40 teeth respectively. The arm rotates about the centre of the gear A at a speed of 80 rpm counter-clockwise. Determine the speed of the gear B if (i) the gear A is fixed, and (ii) the gear A revolves at 240 rpm clockwise instead of being fixed.*

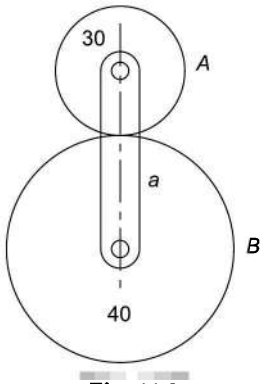

Fig. 11.8

Solution Refer Fig. 11.8. Prepare Table 11.2.

Considering counter-clockwise as positive direction,

(i) Gear A is fixed, thus $y + x = 0$
Arm a rotates at 80 rpm, $y = 80$
$\therefore$ $x = -80$

Speed of the gear B, $y - \frac{3}{4}x$

$80 - \frac{3}{4} \times (-80) = 140 =$ rpm (counter-clockwise)

(i) Gear A revolves at 240 rpm clockwise,
$y + x = -240$
$\therefore$ $x = -80 - 240 = -320$

Speed of the gear B, $y - \frac{3}{4}x$

$= 80 - \frac{3}{4} \times (-320)$

$= 320$ rpm (counter-clockwise)

Algebraic Method

(i) $\frac{T_A}{T_B} = -\frac{N_B - N_a}{N_A - N_a}$

or $-\frac{30}{40} = \frac{N_B - 80}{0 - 80}$ or $N_B = 140$ rpm

(ii) $-\frac{30}{40} = \frac{N_B - 80}{-240 - 80}$ or $N_B = 320$ rpm

Table 11.2

Line	*Action*	*Revs. of a*	*Revs. of A*	*Revs. of B*
1.	a fixed, $S + 1$ rev.	0	1	$-\frac{30}{40}$
2.	a fixed, $S + x$ rev.	0	x	$-\frac{3}{4}x$
3.	Add y	y	$y + x$	$y - \frac{3}{4}x$

Example 11.4 *Figure 11.9 shows a gear train in which gears B and C constitute a compound gear. The number of teeth are shown along with each wheel in the figure. Determine the speed and the direction of rotation of wheels A and E if the arm revolves at 210 rpm clockwise and the gear D is fixed.*

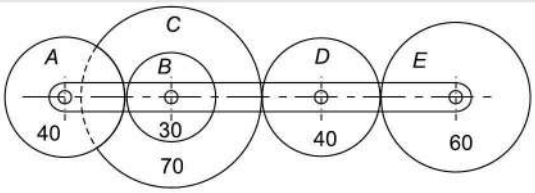

Fig. 11.9

Solution Prepare the Table 11.3:

For given conditions,
Arm a rotates at 210 rpm clockwise, $y = 210$

Gear D is fixed, thus $y + \frac{7x}{3} = 0$

or $210 + \frac{7x}{3} = 0$ or $x = -90$

Speed of $A = y + x = 210 - 90 = 120$ rpm (clockwise)

Speed of $E = y - \frac{14x}{9} = 210 - \frac{14 \times (-90)}{9}$

$= 350$ rpm (clockwise)

Example 11.5 *An epicyclic gear train is shown in Fig. 11.10. The number of teeth on A and B are 80 and 200. Determine the speed of the arm a*

(i) if A rotates at 100 rpm clockwise and B at 50 rpm counter-clockwise

(ii) if A rotates at 100 rpm clockwise and B is stationary

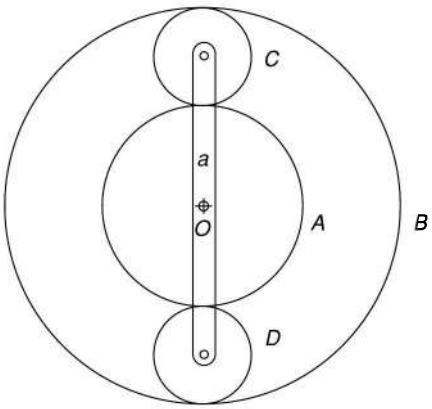

Fig. 11.10

Solution $T_A = 80$ $T_B = 200$

Now, $T_B = 2\left[\frac{T_A}{2} + T_C\right]$

or $200 = 2\left[\frac{80}{2} + T_C\right]$

or $T_C = 60$

Prepare Table 11.4:

Table 11.3

Action	*a*	*A*	*B/C*	*D*	*E*
'a' fixed, A + 1 rev.	0	1	$-\frac{40}{30}$	$-\frac{40}{30} \times \left(-\frac{70}{40}\right)$	$-\frac{7}{3} \times \frac{40}{60}$
'a' fixed, $A + x$ rev.	0	x	$-\frac{40x}{30}$	$\frac{7x}{3}$	$-\frac{14x}{9}$
Add y	y	$y + x$	$y - \frac{40}{30}$	$y + \frac{7x}{3}$	$y - \frac{14x}{9}$

Table 11.4

Action	a	A	C/D	B
a fixed, A + 1 rev.	0	1	$-\frac{80}{60}$	$-\frac{80}{60}\times\frac{60}{200}$
a fixed, $A + x$ rev.	0	x	$-\frac{4x}{3}$	$-\frac{2x}{5}$
Add y	y	$y+x$	$y-\frac{4x}{3}$	$y-\frac{2x}{5}$

(i) From the given conditions,

$$y + x = 100 \quad \text{or} \quad y = 100 - x$$

and $$y - \frac{2x}{5} = -50$$

or $$100 - x - \frac{2x}{5} = -50$$

or $$x = 107.1 \quad \text{and } y = -7.1$$

Thus, speed of arm a = 7.1 rpm counter-clockwise.

(ii) $$y + x = 100 \quad \text{or } y = 100 - x$$

and $$y - \frac{2x}{5} = 0$$

or $$100 - x - \frac{2x}{5} = 0$$

or $$x = 71.4 \quad \text{and } y = 28.6$$

Thus, speed of arm a = 28.6 rpm clockwise.

Example 11.6 *In the epicyclic gear train shown in Fig. 11.11, the compound wheels A and B as well as internal wheels C and D rotate independently about the axis O. The wheels E and F rotate on the pins fixed to the arm a. All the wheels are of the same module. The number of teeth on the wheels are*

$$T_A = 52, T_B = 56, T_E = T_F = 36$$

Determine the speed of C if

(i) the wheel D fixed and arm a rotates at 200 rpm clockwise

(ii) the wheel D rotates at 200 rpm counter-clockwise and the arm a rotates at 20 rpm counter-clockwise

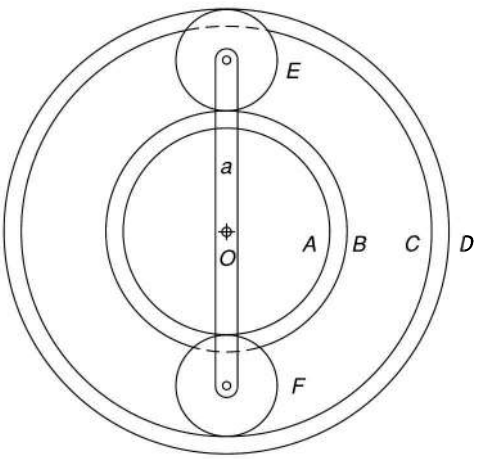

Fig. 11.11

Solution $T_A = 52 \quad T_B = 56 \quad N_F = N_P = 36$

Now, $$T_D = 2\left[\frac{T_B}{2} + T_E\right] = 2\left[\frac{56}{2} + 36\right] = 128$$

$$T_C = 2\left[\frac{T_A}{2} + T_F\right] = 2\left[\frac{52}{2} + 36\right] = 124$$

Prepare Table 11.5.

Table 11.5

Action	*a*	*A/B*	*E*	*F*	*C*	*D*
'*a*' fixed, $A + 1$ rev.	0	1	$-\frac{56}{36}$	$-\frac{52}{36}$	$\frac{52}{36} \times \frac{36}{124}$	$\frac{56}{36} X \frac{36}{128}$
'*a*' fixed, $A + x$ rev.	0	x	$-\frac{14x}{9}$	$-\frac{13x}{9}$	$\frac{13x}{31}$	$\frac{7x}{16}$
Add y	y	$y + x$	$y - \frac{14x}{9}$	$y - \frac{13x}{9}$	$y - \frac{13x}{31}$	$y - \frac{7x}{16}$

(i) From given conditions,

Arm *a* rotates at 200 rpm clockwise, $\therefore\ y = 200$

D is fixed, $\therefore\ y - \frac{7x}{16} = 0$

or $200 - \frac{7x}{16} = 0$

or $x = 457.1$

Speed of $C = y - \frac{13x}{31}$

$= 200 - \frac{13 \times 457.1}{31}$

$=$ <u>8.31 rpm</u> (clockwise)

(ii) $y = 200$,

$\therefore\ y - \frac{7x}{16} = -20$

or $200 - \frac{7x}{16} = -20$

or $x = 502.86$

Speed of $C = y - \frac{13x}{31}$

$= 200 - \frac{13 \times 502.86}{31}$

$= -10.9$ rpm

or <u>10.9 rpm</u> counter-clockwise

Example 11.7 *The annulus A in the gear shown in Fig. 11.12 rotates at 300 rpm about the axis of the fixed wheel S which has 80 teeth. The three-armed spider (only one arm a is shown in Fig.11.12a) is driven at 180 rpm. Determine the number of teeth required on the wheel P.*

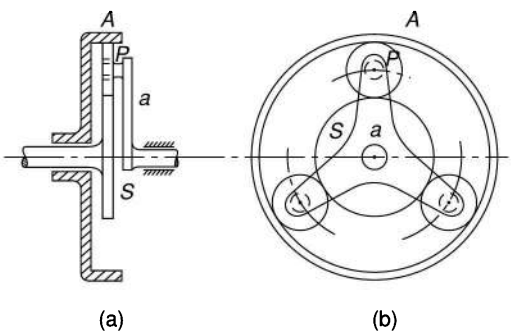

Fig. 11.12

Solution: $N_s = 0$ $N_A = 300$ rpm

$N_a = 180$ rpm $T_S = 80$

Prepare Table 11.6.

Table 11.6

Action	a	S	P	A
'a' fixed, $S + 1$ rev.	0	1	$-\dfrac{80}{T_P}$	$-\dfrac{80}{T_P} \times \dfrac{T_P}{T_A} = -\dfrac{80x}{T_A}$
'a' fixed, $S + x$ rev.	0	x	$-\dfrac{80x}{T_P}$	$-\dfrac{80x}{T_A}$
All given y revs.	y	$y + x$	$y - \dfrac{80x}{T_P}$	$y - \dfrac{80x}{T_A}$

From given conditions,

$$N_a = y = 180 \quad \text{(i)}$$
$$N_S = y + x = 0 \quad \text{(ii)}$$
$$N_A = y - \frac{80x}{T_A} = 300 \quad \text{(iii)}$$

From (i) and (ii), $x = -y = -180$

Solving (iii),

$$180 - \frac{80(-180)}{T_A} = 300$$

or $$\frac{14\,400}{T_A} = 120$$

or $$T_A = 120$$

The pitch diameters of the wheels are proportional to the number of teeth on them.

$$T_S + 2T_P = T_A$$

or $80 + 2T_P = 120$ or $T_P = 20$

Example 11.8 *In a reduction gear shown in Fig.11.13, the input S has 24 teeth. P and C constitute a compound planet having 30 and 18 teeth respectively. If all the gears are of the same pitch, find the ratio of the reduction gear. Assume A to be fixed.*

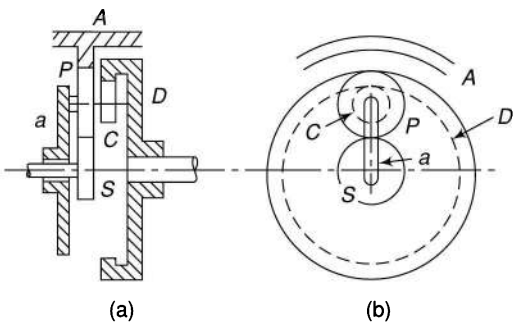

Fig. 11.13

Solution

$T_S = 24$

$T_P = 30$

$T_C = 18$

$N_A = 0$

Pitch diameters of wheels are proportional to the number of teeth on them.

$$T_A = 2\left[\frac{T_S}{2} + T_P\right] = 2\left[\frac{24}{2} + 30\right] = 84$$

$$T_D = 2\left[\frac{T_S}{2} + \frac{T_P}{2} + \frac{T_C}{2}\right] = 2\left[\frac{24}{2} + \frac{30}{2} + \frac{18}{2}\right] = 72$$

Prepare Table 11.7.

Table 11.7

Action	a	S	P/C	A	D
'a' fixed, $S+1$ rev.	0	1	$-\frac{24}{30}$	$-\frac{24}{30}\times\frac{30}{84}$	$-\frac{24}{30}\times\frac{18}{72}$
'a' fixed, $S+x$ rev.	0	x	$-\frac{4x}{5}$	$\frac{-2x}{7}$	$-\frac{x}{5}$
Add y	y	$y+x$	$y-\frac{4x}{5}$	$y-\frac{2x}{7}$	$y-\frac{x}{5}$

From given conditions,

$$N_A = y - \frac{2x}{7} = 0 \text{ or } y = \frac{2x}{7}$$

$$\therefore \quad \frac{N_S}{N_D} = \frac{y+x}{y-\frac{x}{5}} = \frac{\frac{2x}{7}+x}{\frac{2x}{7}-\frac{x}{5}} = \frac{9}{7}\times\frac{35}{3} = 15$$

Example 11.9 *Figure 11.14 shows a port indicator for a twin-screw ship. It is found that the pointer P remains stationary if the propellers run at the same speed and drive the gears C and D in the same direction through equal gears A and B. If the number of teeth on G and F are 24 and 50 respectively, find the ratio of the number of teeth on C to that on D.*

What will be the speed of the pointer if B runs at 5% faster than A and if the speed of C is 100 rpm?

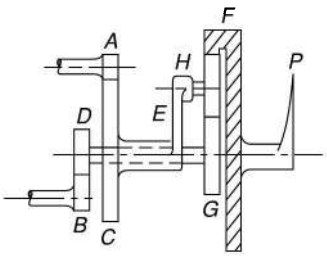

Fig. 11.14

Solution: $T_G = 24 \quad T_F = 50 \quad N_F = N_P = 0$

Now, $$T_F = 2\left[\frac{T_G}{2} + T_H\right]$$

or $$50 = 2\left[\frac{24}{2} + T_H\right]$$

or $$T_H = \frac{50-24}{2} = 13$$

Prepare Table 11.8.

Table 11.8

Action	C/E	D/G	H	F/P
C fixed, $D+1$ rev.	0	1	$-\frac{24}{13}$	$-\frac{24}{13}\times\frac{13}{50}$
C fixed, $D+x$ rev.	0	x	$-\frac{24x}{13}$	$-\frac{12x}{25}$
Add y	y	$y+x$	$y-\frac{24x}{13}$	$y-\frac{12x}{25}$

Given,

$$N_F = y - \frac{12x}{25} = 0 \text{ or } y = \frac{12x}{25}$$

$$\therefore \frac{T_C}{T_D} = \frac{N_D}{N_C} = \frac{y+x}{y} = \frac{\frac{12x}{25}+x}{\frac{12x}{25}} = \frac{37}{12}$$

When B and C rotate at different speeds,

$$N_C = y = 100$$

$$N_A = 100 \times \frac{T_C}{T_A}$$

$$N_B = \left(100 \times \frac{T_C}{T_A}\right) \times 1.05$$

$$N_D = N_B \times \frac{T_B}{T_D} = \left(100 \times \frac{T_C}{T_A} \times 1.05\right) \times \frac{T_B}{T_D}$$

$$= 100 \times 1.05 \times \frac{T_C}{T_D} \quad (\text{as } T_A = T_B \text{ given})$$

$$= 100 \times 1.05 \times \frac{37}{12}$$

or $\quad y + x = 323.75$

$$x = 323.75 - 100 = 223.75$$

$$\therefore \quad N_P = y - \frac{12x}{25}$$

$$= 100 - \frac{12 \times 223.75}{25} = -7.4 \text{ rpm}$$

i.e., P rotates at 7.4 rpm in direction opposite to that of C.

11.6 TORQUES IN EPICYCLIC TRAINS

Torques are transmitted from one element to another when a geared system transmits power. Assume that all the wheels of a gear train rotate at uniform speeds, i.e., accelerations are not involved. Also, each wheel is in equilibrium under the action of torques acting on it.

Let N_S, N_a, N_P and N_A be the speeds and $\mathbf{T}_S$, $\mathbf{T}_a$, $\mathbf{T}_P$ and $\mathbf{T}_A$ the torques transmitted by S, a, P and A respectively (Fig. 11.15).

We have,

$\mathbf{T} = 0$ (**T** is the torque)

or $\quad \mathbf{T}_S + \mathbf{T}_a + \mathbf{T}_P + \mathbf{T}_A = 0 \qquad (11.7)$

Now S and a are connected to machinery outside the system and thus transmit external torques. The planet P can rotate on its own pin fixed to a but is not connected to anything outside. Therefore, it does not transmit external torque. The annulus A is either locked by an external torque or transmits power or torque either to or from the system through external teeth.

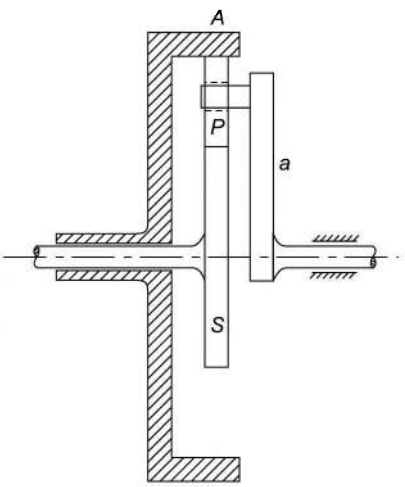

Fig. 11.15

Therefore, Eq. (11.7) becomes,

$\mathbf{T}_S + \mathbf{T}_a + 0 + \mathbf{T}_A = 0$

or $\quad \mathbf{T}_S + \mathbf{T}_a + \mathbf{T}_A = 0 \qquad (11.8)$

If A is fixed, $\mathbf{T}_A$ is usually known as the *braking* or the *fixing torque*. Out of $\mathbf{T}_S$ and $\mathbf{T}_a$ one will be the driving torque and the other, the output or the resisting torque.

Assuming no losses in power transmission,

$\Sigma \mathbf{T}\omega = 0$

or $\quad \Sigma \mathbf{T}N = 0$

or $\quad \mathbf{T}_S N_S + \mathbf{T}_a N_a + \mathbf{T}_A N_A = 0 \qquad (11.9)$

If A is fixed, $N_A = 0$

and

$$\mathbf{T}_S N_S + \mathbf{T}_a N_a = 0 \tag{11.10}$$

Proper directions of speeds and torques must be taken into account.

Example 11.10 *Figure 11.16 shows a gear train in which gears D-E and F-G are compound gears. D gears with A and B; E gears with F; and G gears with C. The numbers of teeth on each gear are A= 60, B = 120, C = 135, D = 30, E = 75, F = 30, G = 60. If the wheel A is fixed and the arm makes 20 revolutions clockwise, find the revolutions of B and C.*

If the arm is applied a turning moment of 1 kN.m, determine the turning moment on the shaft supporting the wheel C.

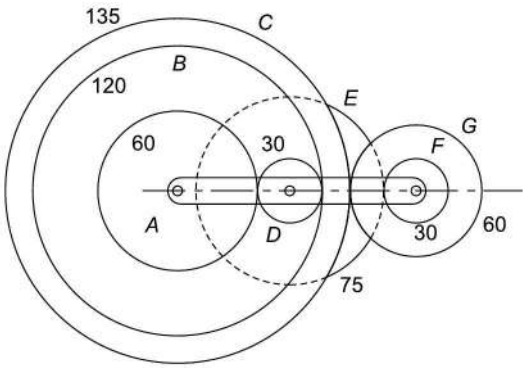

Fig. 11.16

Solution Prepare Table 11.9.

For given conditions,

Arm a rotates at 20 rpm clockwise, $y = 20$

Gear A is fixed, thus $y + x = 0$ or $x = -20$

Speed of $B = y - \dfrac{x}{2} = 20 - \dfrac{-20}{2} = 30$ rpm (clockwise)

Speed of $C = y - \dfrac{20x}{9} = 20 - \dfrac{20 \times (-20)}{9}$

$= 64.4$ rpm (clockwise)

$\mathbf{T}_c N_c + \mathbf{T}_a N_a = 0$ or $T_c \times 64.4 + 1 \times 20 = 0$

or $T_c = -3.22$ kN.m

Thus, turning moment on shaft of the gear C

$= 3.22$ kN.m

Example 11.11 *The number of teeth in the gear shown in Fig. 11.17 are as follows:*

$T_S = 18$, $T_P = 24$, $T_C = 12$, $T_A = 72$

P and C form a compound gear carried by the arm a and the annular gear A is held stationary. Determine the speed of the output at a. Also find the holding torque required on A if 5kW is delivered to S at 800 rpm with an efficiency of 94%.

In case the annulus A rotates at 100 rpm in the same direction as S, what will be the new speed of a?

Table 11.9

Action	*a*	*A*	*D/E*	*B*	*F/G*	*C*
'*a*' fixed, $A + 1$ rev.	0	1	$-\dfrac{60}{30}$	$-\dfrac{60}{30} \times \dfrac{30}{120}$	$-\dfrac{60}{30} \cdot \left(-\dfrac{75}{30}\right) = 5$	$5 \times \left(-\dfrac{60}{135}\right)$
'*a*' fixed, $A + x$ rev.	0	x	$-2x$	$-\dfrac{x}{2}$	$5x$	$-\dfrac{20x}{9}$
Add y	y	$y + x$	$y - 2x$	$y - \dfrac{x}{2}$	$y + 5x$	$y - \dfrac{20x}{9}$

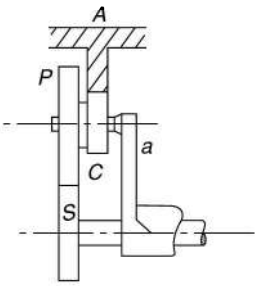

Fig. 11.17

Solution

$T_S = 18$ $\quad N_S = 800$ rpm

$T_P = 24$ $\quad \eta = 0.94$

$T_C = 12$ $\quad N_A = 0$ in first case

$T_A = 72$ $\quad = 100$ rpm in second case

$P = 5$ kW

Prepare the Table 11.10:

Given conditions (1st case)

$$N_A = y - \frac{x}{8} = 0 \quad \text{or} \quad y = \frac{x}{8}$$

$$\therefore \quad N_S = y + x = \frac{x}{8} + x = 800$$

or $\quad \frac{9}{8}x = 800$

or $\quad x = 711$

$\therefore \quad y = 88.9$

$\therefore$ Speed of $\quad a = y = \underline{88.9 \text{ rpm}}$

Now

$$\Sigma \mathbf{T}\, N = 0$$

or $\quad \mathbf{T}_S N_S + \mathbf{T}_a N_a + \mathbf{T}_A N_A = 0$

where

$$T_S = \frac{\text{Power input}}{\frac{2\pi N}{60}} = \frac{5000}{\frac{2\pi \times 800}{60}} = 59.7 \text{ N.m}$$

T_a = Theoretical torque at output

$$= \frac{\text{Actual torque at output}}{\text{Efficiency of power transmission}}$$

$$= \frac{T_a'}{\eta}$$

$$\therefore \quad 59.7 \times 800 + \frac{T_a'}{0.94} \times 88.9 + T_A \times 0 = 0$$

or $\quad T_a' = -504.9$ N.m

Also,

$$T_S + T_a' + T_A = 0 \qquad \text{[Eq. (11.8)]}$$

or $\quad 59.7 - 504.9 + T_A = 0$

or $\quad T_A = -\underline{445.2 \text{ N.m}}$

2nd case:

$$N_A = y - \frac{x}{8} = 100 \text{ or } y = 100 + \frac{x}{8}$$

$$N_S = y + x = 100 + \frac{x}{8} + x = 800$$

or $\quad \frac{9x}{8} = 700$

or $\quad x = 622.2$

$$y = 100 + \frac{622.2}{8} = 177.8$$

$\therefore$ New speed of arm $a = y = \underline{177.8 \text{ rpm}}$

Table 11.10

Action	*a*	*S*	*P/C*	*A*
'*a*' is fixed, $S + 1$ rev.	0	1	$-\frac{18}{24}$	$-\frac{18}{24} \times \frac{12}{72}$
'*a*' is fixed, $S + x$ rev.	0	x	$-\frac{3x}{4}$	$-\frac{x}{8}$
Add y	y	$y + x$	$y - \frac{3x}{4}$	$y - \frac{x}{8}$

***Example* 11.12** *In the epicyclic gear train shown in Fig. 11.18, a gear C which has teeth cut internally and externally is free to rotate on an arm driven by the shaft S_1. It meshes externally with the casing D and internally with the pinion B. The gears have the following number of teeth:*

$T_B = 24$, $T_C = 32$ and 40, $T_D = 48$

Find the velocity ratio between

(i) S_1 and S_2 when D is fixed

(ii) S_1 and D when S_2 is fixed

What will be the torque required to fix the casing D if a torque of 300 N.m is applied to the shaft S_1?

Solution Complete the Table 11.11.

(i) From the given conditions,

$$N_D = y + \frac{5x}{8} = 0 \text{ or } y = -\frac{5x}{8}$$

$$\frac{N_{S1}}{N_{S2}} = \frac{N_a}{N_B} = \frac{y}{y+x} = \frac{-5x/8}{-\frac{5x}{8}+x} = -\frac{5}{3}$$

(ii) $$\frac{N_{S1}}{N_D} = \frac{N_a}{N_D} = \frac{y}{y+\frac{5x}{8}}$$

But $N_B = y + x = 0$ or $y = -x$

$$\therefore \frac{N_{S1}}{N_D} = \frac{-x}{-x+\frac{5x}{8}} = \frac{8}{3}$$

If **T** denotes the torque,

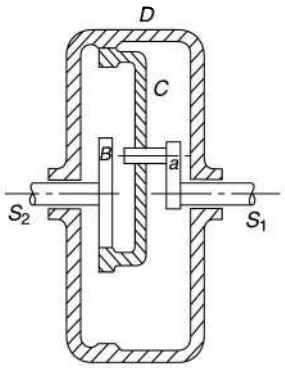

Fig. 11.18

$$\mathbf{T}_{S1}N_{S1} + \mathbf{T}_{S2}N_{S2} + \mathbf{T}_D N_D = 0$$

or

$$T_{S2} = -\frac{T_{S1}N_{S1}}{N_{S2}} = \frac{300 \times 5}{3} = 500 \text{ N.m}$$

($N_D = 0$, as the casing is fixed and $N_{S1}/N_{S2} = -5/3$)

Also,

$$\mathbf{T}_{S1} + \mathbf{T}_{S2} + \mathbf{T}_D = 0$$

$$300 + 500 + T_D = 0$$

or $$T_D = \underline{-800 \text{ N.m}}$$

Example 11.13 *Figure 11.19 shows an epicyclic gear train in which the driving gear A has 20 teeth, the fixed annular gear C has 150 teeth and the ratio of teeth in gears D and E is 21:50. If 2 kW of power at a speed of 800 rpm is supplied to the gear A, determine the speed and the direction of rotation of gear E. Also, find the fixing torque required at the gear C.*

Table 11.11

Action	*a/S_1*	*B/S_2*	*C*	*D*
'*a*' fixed, *B* + 1 rev.	0	1	$\frac{24}{32}$	$\frac{24}{32} \times \frac{40}{48}$
'*a*' fixed, *B* + *x* rev.	0	x	$\frac{3x}{4}$	$\frac{5x}{8}$
Add y	y	$y + x$	$y + \frac{3x}{4}$	$y + \frac{5x}{8}$

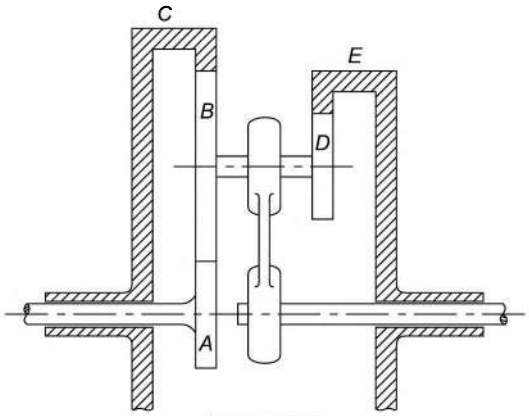

Fig. 11.19

Solution $T_A = 20$, $T_C = 150$, $N_D : N_E = 21:50$

Now, $T_C = 2\left[\dfrac{T_A}{2} + T_B\right]$

or $150 = 2\left[\dfrac{20}{2} + T_B\right]$ or $T_B = 65$

Prepare the Table 11.12:

For given conditions,

Gear A rotates at 800 rpm clockwise, $y + x = 800$ or $y = 800 - x$

Gear C is fixed, thus $y - \dfrac{2x}{15} = 0$

or $800 - x - \dfrac{2x}{15} = 0$ or $x = 705.9$

$y = 800 - 705.9 = 94.1$ rpm

Speed of $E = y - \dfrac{42x}{325}$

$= 94.1 - \dfrac{42 \times 705.9}{325} = 2.88$ rpm in the same direction as A.

If **T** denotes the torque,

$$\mathbf{T} = \frac{P}{\omega} = \frac{2000}{2\pi \times 800/60} = 23.87 \text{ N.m}$$

If there is no power loss, $\mathbf{T}_A N_A + \mathbf{T}_E N_E + \mathbf{T}_C N_C = 0$

or $T_E = -\dfrac{T_A N_A}{N_E} = -\dfrac{23.87 \times 800}{2.88} = -6631$ N.m

... ($N_C = 0$, as the casing is fixed)

Also,

$$\mathbf{T}_A + \mathbf{T}_E + \mathbf{T}_C = 0$$

$$23.87 - 6631 + T_E = 0$$

or $T_E = 6607.13$ N.m

Table 11.12

Action	*a*	*A*	*B/D*	*C*	*E*
'*a*' fixed, $A + 1$ rev.	0	1	$-\dfrac{20}{65}$	$-\dfrac{20}{65} \times \dfrac{65}{150}$	$-\dfrac{20}{65} \cdot \left(\dfrac{21}{50}\right)$
'*a*' fixed, $A + x$ rev.	0	x	$-\dfrac{4x}{13}$	$-\dfrac{2x}{15}$	$-\dfrac{42x}{325}$
Add y	y	$y + x$	$y - \dfrac{4x}{13}$	$y - \dfrac{2x}{15}$	$y - \dfrac{42x}{325}$

11.7 SUN AND PLANET GEAR

When an annular wheel A is added to the epicyclic gear train of Fig. 11.5, the combination is usually referred as *sun and planet gear* (Fig. 11.20). The annular wheel gears with the wheel P which can rotate freely on

the arm a. The wheels S and P are generally called the *sun* and the *planet* wheels respectively due to analogy of motion of a planet around the sun.

In general, S, A and a are free to rotate independently of each other. It is also possible that either S or A are fixed. If A is fixed, S will be the driving member and if S is fixed, A will be the driving member. In each case the driven member is the arm a.

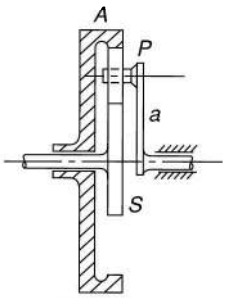

Fig. 11.20

Let N_S = speed of the sun wheel S
N_A = speed of the annular wheel A
N_a = speed of the arm a
T_S = number of teeth on S
T_A = number of teeth on A

Then the Table 11.13 can be prepared as usual.

Table 11.13

Action	*Arm a*	*S*	*P*	*A*
'a' fixed, $S+1$ rev.	0	1	$-\frac{T_S}{T_P}$	$\left(-\frac{T_S}{T_P}\times\frac{T_P}{T_A}\right)=-\frac{T_S}{T_A}$
'a' fixed, $S+x$ rev.	0	x	$-\frac{T_S}{T_P}x$	$-\frac{T_S}{T_A}x$
All given y rev. (add y)	y	$y+x$	$y-\frac{T_S}{T_P}x$	$y-\frac{T_S}{T_A}x$

$\therefore$
$$x+y=N_S \tag{i}$$

and
$$y-\frac{T_S}{T_A}x=N_A \tag{ii}$$

Subtracting (ii) from (i),

$$x\left(1+\frac{T_S}{T_A}\right)=N_S-N_A$$

or
$$x\left(\frac{T_A+T_S}{T_A}\right)=N_S-N_A$$

or
$$x=\left(\frac{N_S-N_A}{T_A+T_S}\right)T_A$$

and
$$y=N_S-x$$

$$=N_S-\frac{N_ST_A-N_AT_A}{T_A+T_S}$$

$$=\frac{N_ST_A+N_ST_S-N_ST_A+N_AT_A}{T_A+T_S}$$

$$N_a = y = \frac{N_S T_S + N_A T_A}{T_S + T_A} \tag{11.11}$$

If the sun wheel S is fixed, $N_S = 0$

Speed of the arm,

$$N_a = \frac{N_A T_A}{T_S + T_A} \text{ or } \frac{N_a}{N_A} = \frac{1}{T_S / T_A + 1}$$

If the annular wheel A is fixed, $N_A = 0$.

Speed of the arm,

$$N_a = \frac{N_S T_S}{T_S + T_A} \text{ or } \frac{N_a}{N_S} = \frac{T_S / T_A}{1 + T_S / T_A}$$

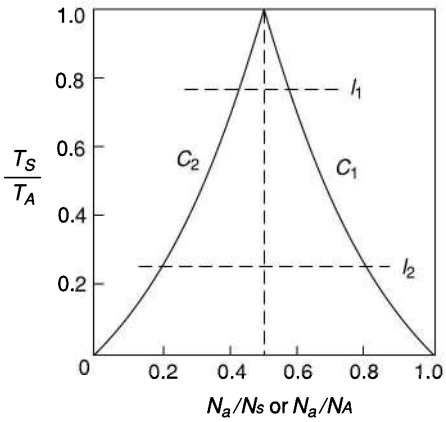

Fig. 11.21

The number of teeth on the sun wheel can vary from 0 to T_A, i.e., from zero to the number of teeth on the annular wheel. Therefore, the ratio of the number of teeth on the sun wheel to that on the annular wheel, i.e., T_S/T_A can vary from 0 to 1. If a graph T_S/T_A vs. N_a/N_A (S is fixed) is plotted, the curve C_1 is obtained (Fig. 11.21) which shows that the sun and the planet gear always acts as a reduction gear. The speed of the arm decreases from N_A to 1/2 N_A as the number of teeth of the sun wheel increases from zero to T_A. Similarly, if A is fixed T_S/T_A vs. N_a/N_S is plotted, the curve C_2 is obtained. This shows that it again acts as a reduction gear in which the speed of the arm varies from zero to $1/2N_S$.

In both cases, the direction of the arm is the same as that of the driving member.

Horizontal dotted lines l_1 and l_2 show the practical limits of the ratio of T_S/T_A and of the corresponding speeds of the arm, where middle portion shows the range.

Example 11.14 *Determine the velocity ratio of the two shafts B and C of the compound gear shown in Fig. 11.22a in which the sun wheel S_2 is fixed. The numbers of teeth on different gears are mentioned alongside the respective gear. Also, find the torque required to fix the gear S_2 when a clockwise torque of 160 N.m is applied to the gear S_1.*

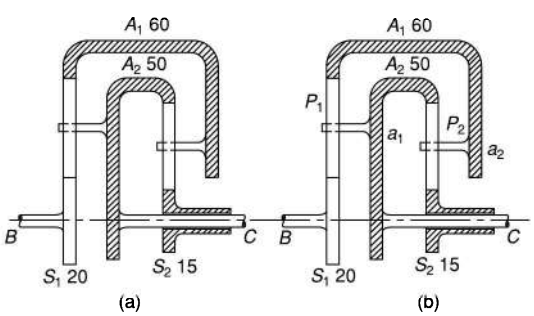

Fig. 11.22

Solution For the first sun and planet gear [Fig. 11.22(b)]

$$N_{a1} = \frac{N_{A1}T_{A1} + N_{S1}T_{S1}}{T_{A1} + T_{S1}} = \frac{60N_{A1} + 20N_{S1}}{60 + 20} = \frac{3N_{A1} + N_{S1}}{4} \tag{i}$$

For the second sun and planet gear (S_2 is fixed),

$$N_{a2} = \frac{50N_{A2} + 0}{50 + 15} = \frac{10N_{A2}}{13}$$

or $N_{a2} = 0.769\, N_{A2}$ (ii)

From the figure of the gear, it can be seen that

- Annular wheel A_1 is the arm a_2 of the second sun and planet gear
  Thus, $N_{A1} = N_{a2}$
- Annular wheel A_2 is the arm a_1 of the first sun and planet gear
  Thus, $N_{A2} = N_{a1}$
- Also $N_B = N_{S1}$ and $N_c = N_{A2}$

From (ii), $N_{A1} = 0.769 N_{A2}$

From (i), $$N_{A2} = \frac{3N_{A1} + N_{S1}}{4}$$

$$= \frac{3 \times 0.769 N_{A2} + N_{S1}}{4}$$

or $1.693\, N_{A2} = N_{S1}$

or $$\frac{N_{S1}}{N_{A2}} = \frac{N_B}{N_C} = 1.693$$

If **T** denotes the torque,

$$\mathbf{T}_{S1}N_{S1} + \mathbf{T}_{S2}N_{S2} + \mathbf{T}_{A2}N_{A2} = 0$$

or $\mathbf{T}_{S1}N_{S1} + 0 + \mathbf{T}_{A2}N_{A2} = 0$

or $$\mathbf{T}_{A2} = -\frac{N_{S1}}{N_{A2}} \times T_{S1}$$

$= -1.693 \times 160 = -270.9$ N.m

Also $\mathbf{T}_{S1} + \mathbf{T}_{S2} + \mathbf{T}_{A2} = 0$

or $160 + \mathbf{T}_{S2} - 270.9 = 0$

or torque required to fix the wheel S_2,

$\mathbf{T}_{S2} = 110.9$ N.m clockwise

Example 11.15 *Figure 11.23 shows a compound gear in which an input torque of 150 N.m is given to shaft B at 1000 rpm. The sun and planet gears are all of the same diameter and pitch. What will be the speed and the torque at the output shaft C assuming an efficiency of 97%?*

Also, find the torque required to hold stationary the annulus A_1.

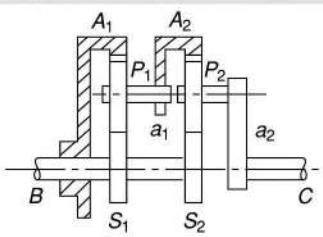

Fig. 11.23

Solution $N_{A2} = N_{a1}$, $N_{S1} = N_{S2} = 1000$ rpm

Speed of the arm a_1,

$$N_{a1} = \frac{N_{A1}T_{A1} + N_{S1}T_{S1}}{T_{A1} + T_{S1}} = \frac{N_{S1}T_{S1}}{T_{A1} + T_{A1}} \quad (N_{A1} = 0)$$

Similarly,

$$N_{a2} = \frac{N_{A2}T_{A2} + N_{S2}T_{S2}}{T_{A2} + T_{S2}}$$

All the sun and the planet gears are of the same diameter and pitch,

$$\therefore\ T_{A1} = 2\left[\frac{T_{S1}}{2} + T_{P1}\right] = 2\left[\frac{T_{S1}}{2} + T_{S1}\right] = 3T_{S1}$$

Thus,

$$T_{A1} = T_{A2} = 3T_{S1} = 3T_{S2} = 3T_{P1} = 3T_{P2}$$

Then $$N_{a1} = \frac{N_{S1}T_{S1}}{T_{A1} + T_{S1}} = \frac{N_{S1}T_{S1}}{3T_{S1} + T_{S1}} = \frac{N_{S1}}{4}$$

and $$N_{a2} = \frac{3N_{A2} + N_{S2}}{4}$$

$$= \frac{3N_{a1} + N_{S1}}{4} \qquad (N_{A2} = N_{a1})$$

$$= \frac{3N_{S1}/4 + N_{S1}}{4}$$

or $$N_{a2} = \frac{7}{16} \times 1000 = 437.5 \text{ rpm}$$

Speed of shaft $C = 437.5$ rpm

If T denotes the torque,

$$T_S N_S + \frac{T_{a2}N_{a2}}{\eta} = 0$$

$$150 \times 1000 + \frac{T_{a2} \times 437.5}{0.97} = 0$$

$T_{a2} = \underline{-332.6 \text{ N.m}}$

Also $T_{S1} + T_{a2} + T_{A1} = 0$

or $150 - 332.6 + T_{A1} = 0$

Holding torque, $T_{A1} = \underline{182.6 \text{ N.m}}$

in the same direction as the input torque.

11.8 BEVEL EPICYCLIC GEAR

The methods used for the solution of epicyclic trains of the spur gears are also valid for epicyclic trains consisting of bevel wheels. However, for wheels whose axes are inclined to the main axis, the terms clockwise and counter-clockwise are not applicable. So, in the tabular method of solution, plus or minus sign is omitted for these wheels and also the addition of y is not convenient to make as the rotation is about a different axis.

Example 11.16 *Figure 11.24 shows a Humpage gear used in a lathe headstock. The number of teeth on the wheels B, C, D, E and F are 18, 54, 22, 44 and 72 respectively. If the shaft G rotates at 200 rpm, what will be the speed of the shaft H when (i) F is held stationary, and (ii) it is rotated at 30 rpm opposite to G?*

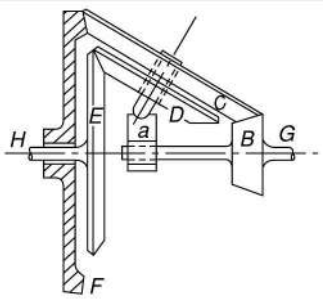

Fig. 11.24

Solution

$T_B = 18$ $\quad T_E = 44$

$T_C = 54$ $\quad T_F = 72$

$T_D = 22$ $\quad N_G = N_B = 200$ rpm

Note that the axis of the wheels C and D is inclined to the main axis (of wheels B, E and F). Therefore, it is usual not to affix any sign to the direction of rotation of these wheels as mentioned earlier. However, they influence the direction of rotation of the other wheels.

Prepare the Table 11.14.

From given conditions,

$$N_G = y + x = 200 \quad \text{or} \quad y = 200 - x$$

and $N_F = y - \dfrac{x}{4} = 0$

Table 11.14

Action	a	B/G	C/D	E/H	F
'a' fixed, B + 1 rev.	0	1	$\frac{18}{54}$	$-\frac{18}{54}\times\frac{22}{44}$	$-\frac{18}{54}\times\frac{54}{72}$
'a' fixed, $B + x$ rev.	0	x	$\frac{x}{3}$	$-\frac{x}{6}$	$-\frac{x}{4}$
Add y	y	$y + x$	$y+\frac{x}{3}$	$y-\frac{x}{6}$	$y-\frac{x}{4}$

or $\quad 200 - x - \dfrac{x}{4} = 0$

or $\quad x = 160$

$y = 200 - 160 = 40$

$$\therefore \quad N_H = y - \frac{x}{6} = 40 - \frac{160}{6} = \underline{13.3 \text{ rpm}}$$

In the second case,

$$N_G = y + x = 200 \quad \text{or} \quad y = 200 - x$$

and $N_F = y - \dfrac{x}{4} = -30$

or $\quad 200 - x - \dfrac{x}{4} = -30$

or $\quad x = 184$

$y = 200 - 184 = 16$

$$\therefore \quad N_A = y - \frac{x}{6} = 16 - \frac{184}{6} = \underline{-14.67 \text{ rpm}}$$

Thus, in the second case, the shaft H rotates in the opposite direction to that of G.

Example 11.17 *Figure 11.25 shows a train of bevel gears. The wheel E is fixed whereas the wheels B and G are keyed to the driving and the driven shafts respectively. The wheels C, D and F are keyed to the inclined shaft which is supported on the arm a. The arm is free to rotate about the common axis of the driving and driven shafts. The number of teeth on the wheels B, C, D, E, F and G are 15, 45, 45, 135, 40 and 100 respectively. Find the ratio of the driving and the driven shaft speeds.*

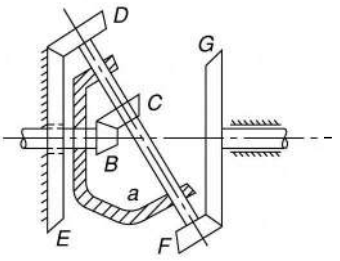

Fig. 11.25

Solution

$T_B = 15$ $\quad$ $T_E = 135$

$T_C = 45$ $\quad$ $T_F = 40$

$T_D = 45$ $\quad$ $N_G = 100$

From the figure, it is clear that the train consists of two epicyclic trains. The train *BCDE* causes the arm *a* to turn and the arm causes *G* to turn through the train *EDFG*.

Prepare Table 11.15.

From the given conditions,

$$N_E = y + \frac{x}{9} = 0 \quad \text{or} \quad x = -9y$$

$$\frac{N_G}{N_B} = \frac{y + \frac{2x}{15}}{y + x} = \frac{y - \frac{18y}{15}}{y - 9x} = -\frac{-\frac{y}{5}}{-8y} = \frac{1}{40}$$

Thus, *B* must turn 40 times to turn *G* once in the same direction.

Table 11.15

Action	*a*	*B/G*	*C/D/F*	*E*	*G*
'*a*' fixed, *B* + 1 rev.	0	1	$\frac{15}{45}$	$\frac{15}{45} \times \frac{45}{135}$	$\frac{15}{45} \times \frac{40}{100}$
'*a*' fixed , *B* + *x* rev.	0	x	$\frac{x}{3}$	$\frac{x}{9}$	$\frac{2x}{15}$
Add *y*	y	$y + x$	$y + \frac{x}{3}$	$y + \frac{x}{9}$	$y + \frac{2x}{15}$

11.9 COMPOUND EPICYCLIC GEAR

When an epicyclic gear consists of a number of epicyclic gears (sun and planet gears) in series such that the pin of the arm of the first epicyclic gear drives an element of another epicyclic gear, it is known as a *compound epicyclic gear.*

Figure 11.26 shows a compound epicyclic gear. It consists of three simple epicyclic gears namely $A_1a_1P_1S_1$, $A_2a_2P_2S_2$ and $A_3a_3P_3S_3$. The planet P_1 of the first epicyclic gear rotates freely on the pin carried by the arm a_1. As the arm a_1 is integral with the annulus A_2 of the second epicyclic gear and the sun wheel of the third, the pin of the arm a_1 also drives A_2 and S_3, i.e., the annulus and the sun wheel of the second and the third epicyclic gears respectively at the same speed and direction as its own about the axis of the arm. Also, the sun wheel of the first is integral with that of second and the arm of the second with that of the third.

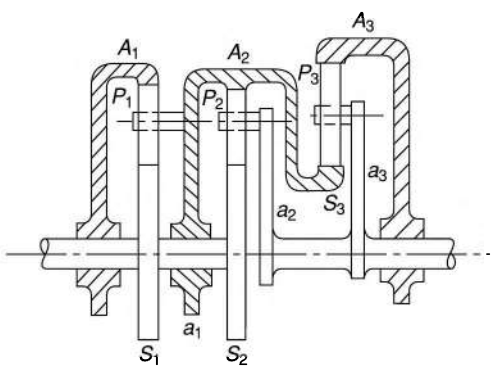

Fig. 11.26

To analyse a compound epicyclic gear, each epicyclic gear or sun and planet gear is treated separately. Thus, for the first epicyclic gear,

Speed of the arm,

$$N_{a1} = \frac{N_{s1}T_{s1} + N_{A1}T_{A1}}{T_{S1} + T_{A1}} \tag{11.12}$$

Thus, if the speeds N_{S1} and N_{A1} are known (if A_1 is fixed, $N_{A1} = 0$), N_{a1} can be calculated.

Similarly, for the second sun and planet gear,

$$N_{a2} = \frac{N_{S2}T_{S2} + N_{A2}T_{A2}}{T_{S2} + T_{A2}}$$

As A_2 is integral with a_1 and S_2 with S_1,

$$\therefore \qquad N_{A2} = N_{a1} \quad \text{and} \quad N_{S2} = N_{S1}$$

Thus, N_{a2} can be known.

In the same way,

$$N_{a3} = \frac{N_{s3}T_{s3} + N_{A3}T_{A3}}{T_{S3} + T_{A3}}$$

a_3 is integral with a_2 and S_3 with a_1,

$$\therefore \qquad N_{a3} = N_{a2} \quad \text{and} \quad N_{S3} = N_{a1}$$

So, N_{A3} can be calculated.

11.10 AUTOMOTIVE TRANSMISSION GEAR TRAINS

Gear trains may be used to obtain different speeds of an automobile. A simple sliding gear box makes use of a compound gear train and is engaged by sliding the gears on the driven shaft to mesh with the gears on a lay shaft. On the other hand, a pre-selective gear box uses sun and planet gears and brake bands are used to lock one of the annular wheels.

1. Sliding Gear Box

The arrangement of such type of a gear box is shown in Fig. 11.27. The pinion A, keyed to the driving shaft is in constant mesh with the gear B on the lay shaft. The gears B, C, E and G are rigidly fixed on the lay shaft. The driven shaft is splined and carries the gear D as well as the compound gear F–H. Thus, gears D, F and H revolve with the driven shaft and can also slide on it. The figure shows the gear box in the neutral position, i.e., if the driving shaft is revolving, all the gears on the lay shaft revolve, but the driven shaft with its gears will be at rest.

First Gear The first gear is engaged by the sliding gear H towards the right and meshing it with the gear G of the lay shaft. The transmission will be from A to B and from G to H and the train value $\frac{T_A}{T_B} \cdot \frac{T_G}{T_H}$.

Second Gear The vehicle is engaged in the second gear by the sliding gear F towards left and engaging it with the gear E of the lay shaft. The transmission is from A to B and from E to F and the train value $\frac{T_A}{T_B} \cdot \frac{T_E}{T_F}$.

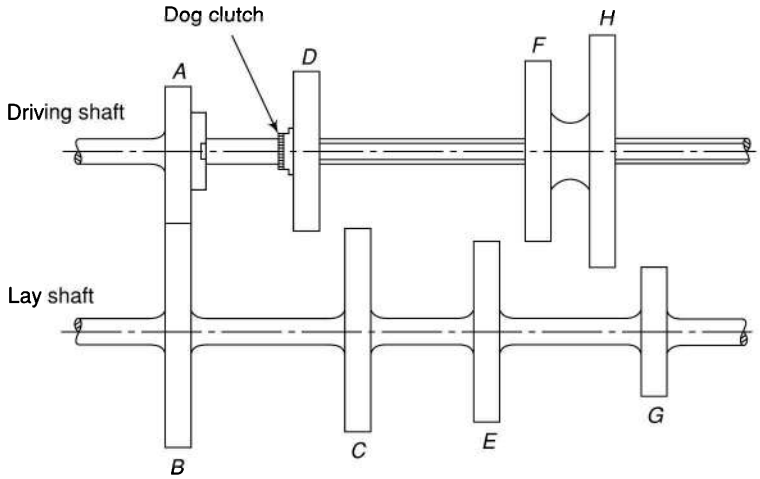

Fig. 11.27

Third Gear By sliding the gear D towards the right and engaging with the gear C of the lay shaft, the transmission in the third gear is obtained which is from A to B and from C to D and the train value $\frac{T_A}{T_B} \cdot \frac{T_C}{T_D}$.

Top Gear The gear D is engaged directly with the gear A through a dog clutch. This way the power is transmitted directly to the driven shaft. The lay shaft along with its gear wheels revolves idly and the driven shaft runs at the same speed as the driving shaft.

To put the vehicle in the reverse gear, an idler is made to mesh with G and H (not shown in the figure) so that both of them rotate in the same direction, thus rotating the driven shaft in the opposite direction.

2. Pre-Selective Gear Box

A pre-selective gear-box is a device by which three or four different speeds of the automobile can be obtained. It makes use of sun and planet gears. The number of sun and planet gears to be used will be equal to the number of gear ratios required, except for the top gear which is obtained by direct drive from the crankshaft to the propeller shaft through the clutch.

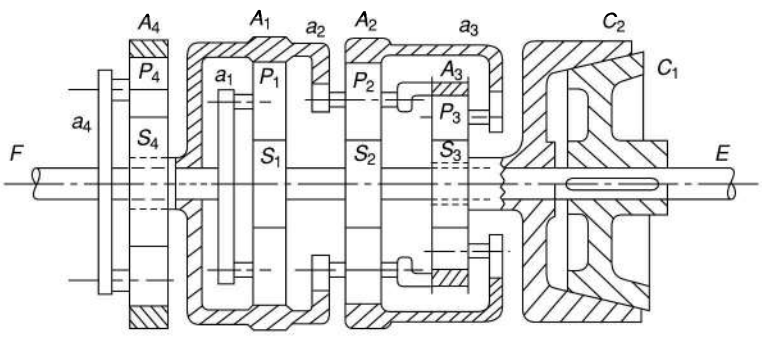

Fig. 11.28

A typical pre-selective gear-box known as *Wilson gear box* is shown in Fig. 11.28. It consists of four sets of the sun and planet gears out of which the first three are for speed reduction and the fourth, for the reverse gear. The first set of the sun and planet gear gives the minimum speed of the propeller shaft whereas the third, the maximum, but lesser than that obtained with the top gear.

The engine shaft E is made integral with the sun wheels S_1 and S_2 and is keyed to the inner element C_1 of

the clutch. The sun wheel S_3 is integral with the outer element C_2 of the clutch and can rotate freely around the shaft E.

The arm a_3, carrying the pin around which the planet P_3 can rotate freely, is integral with the annular wheel A_2. The arm a_2, carrying the pin around which the planet P_2 can rotate freely is integral with the annular wheels A_1 and A_3. The arm a_1 carrying the pin for the planet P_1 is integral with the propeller shaft F and the arm a_4. The arm a_4 carries a pin for the planet P_4.

The sun wheel S_4 is integral with the annular wheel A_1 and can rotate freely around the shaft F.

All the sun wheels gear with their annular wheels through their respective planet gears.

Brake bands (not shown in the figure) are provided around the annular wheels A_1, A_2, A_4 and the element C_2 of the clutch by which any of these can be locked in turn. During the locking of any of these, the two elements C_1 and C_2 of the clutch are disengaged automatically. The clutch is engaged only for the direct drive (top gear).

First Gear To engage the first gear, A_1 is locked and the clutch is disengaged. Consider the first set of the sun and planet gear,

Speed of arm,

$$N_{a1} = \frac{N_{A1}T_{A1} + N_{S1}T_{S1}}{T_{A1} + T_{S1}}$$

where N_{S1} = speed of the sun wheel S_1
= speed of the engine shaft E
N_{A1} = speed of the annular wheel A_1
= 0

Therefore, N_{a1} can be known which is also the speed of the shaft F.

The speed of the other gears which rotate freely can also be known as follows:

For the second set of the sun and planet gear,

$$N_{a2} = \frac{N_{A2}T_{A2} + N_{S2}T_{S2}}{T_{A2} + T_{S2}}$$

where $N_{a2} = N_{A1} = 0$

and $N_{S2} = N_{S1}$ = speed of E

Thus, N_{A2} can be known.

$$N_{a3} = \frac{N_{A3}T_{A3} + N_{S3}T_{S3}}{T_{A3} + T_{S3}}$$

$$N_{A3} = N_{a2} = 0$$

and $N_{a3} = N_{A2}$ (calculated above)

N_{S3} can be calculated. S_3 is integral with C_2 and thus C_2 also rotates at the same speed and has free rotation.

$$N_{a4} = \frac{N_{A4}T_{A4} + N_{S4}T_{S4}}{T_{A4} + T_{S4}}$$

where $N_{a4} = N_{a1}$

and $N_{S4} = N_{A1} = 0$

Thus, N_{A4} can be calculated. The annual wheel A_4 has free rotation.

Second Gear To engage the second gear, A_2 is locked and the clutch is disengaged.

$$N_{a2} = \frac{N_{A2}T_{A2} + N_{S2}T_{S2}}{T_{A2} + T_{S2}}$$

where $N_{A2} = 0$

and $N_{S2} =$ Speed of E

Thus, N_{a2} can be known.

$$N_{a1} = \frac{N_{A1}T_{A1} + N_{S1}T_{S1}}{T_{A1} + T_{S1}}$$

where $N_{A1} = N_{a2}$

and $N_{S1} = N_E$

$N_{a1,}$ which is also the speed of the propeller shaft, can be known.

Free rotation of A_4 and C_2 can also be known in a similar way as in case of the first gear.

Third Gear Lock C_2 and disengage the clutch. The operation also locks the sun wheel S_3.

$$N_{a3} = \frac{N_{A3}T_{A3} + N_{S3}T_{S3}}{T_{A3} + T_{S3}} = \frac{N_{A3}T_{A3}}{T_{A3} + T_{S3}} \qquad (N_{S3} = 0)$$

and

$$N_{a2} = \frac{N_{A2}T_{A2} + N_{S2}T_{S2}}{T_{A2} + T_{S2}}$$

In the above two equations,

$$N_{a3} = N_{A2},\ N_{a2} = N_{A3} \text{ and } N_{S2} = N_E$$

Thus, N_{a2} can be calculated. From N_{a2} the value of N_{a1} can be calculated in the way it is done for the second gear which further provides the speed of the propeller shaft.

Fourth (Top) Gear All the brake bands are freed. C_1 and C_2 are engaged. Thus, $S_{1,}$ S_2 and S_3 all rotate at the engine speed and it can be shown that the whole system rotates as a complete unit at the engine speed. Thus, speed of the propeller shaft is equal to that of the engine shaft.

Reverse Gear The clutch is disengaged and A_4 is locked.

We have,

$$N_{a4} = \frac{N_{A4}T_{A4} + N_{S4}T_{S4}}{T_{A4} + T_{S4}}$$

$$= \frac{N_{S4}T_{S4}}{T_{A4} + T_{S4}} \qquad (N_{A4} = 0)$$

and

$$N_{a1} = \frac{N_{A1}T_{A1} + N_{S1}T_{S1}}{T_{A1} + T_{S1}}$$

In the above two equations,

$N_{a4} = N_{a1},$

$N_{S4} = N_{A1}$

and $N_{S1} = N_E$

Thus, N_{a1} or N_{a4} can be known which is the speed of the propeller shaft.

Assuming roughly that $T_{A1} = T_{A4}$ and $T_{S1} = T_{S4}$,

$$N_{S4}T_{S4} = N_{A1}T_{A1} + N_{S1}T_{S1} = N_{S4}T_{A1} + N_{S1}T_{S1}$$
$$N_{S4}(T_{S4} - T_{A1}) = N_{S1}T_{S1}$$
$$N_{S4} = \frac{N_{S1}.T_{S1}}{T_{S4} - T_{A1}}$$

As T_{A1} is greater than T_{S4}, N_{S4} will be negative. Thus, N_{a4} is negative, which shows that the propeller shaft rotates in the reverse direction.

Example 11.18 *A four-speed sliding gear box of an automobile is to be designed to give speed ratios of 4, 2.5, 1.5 and 1 approximately for the first, second, third and top gears respectively. The input and the output shafts have the same alignment. The horizontal central distance between them and the lay shaft is 90 mm. The teeth have a module of 4 mm. No wheel has less than 15 teeth. Calculate suitable number of teeth on each wheel and find the actual speed ratios attained.*

Solution

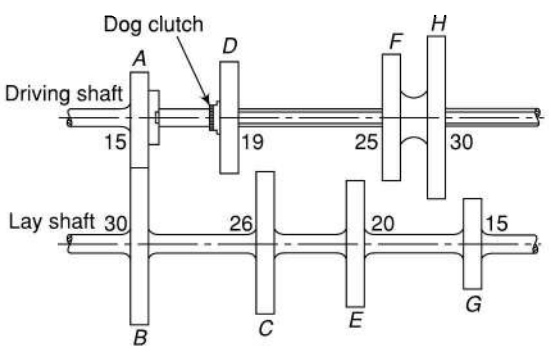

Fig. 11.29

First Gear (Fig. 11.29) The transmission is from A to B and from G to H.

As two shafts are parallel, $r_a + r_b = r_g + r_h$

$$= \frac{mT_a}{2} + \frac{mT_b}{2} = \frac{mT_g}{2} + \frac{mT_h}{2} = 90$$

$$T_a + T_b = T_g + T_h = \frac{90 \times 2}{4} = 45 \qquad \text{(i)}$$

$$\text{The train value} = \frac{T_a}{T_b}.\frac{T_g}{T_h} = \frac{1}{4}$$

To achieve this train value, the ratio of number of teeth between A and B, and G and H may be assumed same.

Thus, $T_b = 2T_a$ and $T_h = 2T_g$. (ii)

From (i) and (ii), $3T_a = 45$ or $T_a = 15$, $T_b = 30$

Similarly, $T_g = 15$, $T_h = 30$

Second Gear The transmission is from A to B and from E to F.

$$T_e + T_f = T_a + T_b = 45 \qquad \text{(iii)}$$

$$\text{The train value} = \frac{T_a}{T_b}.\frac{T_e}{T_f} = \frac{1}{2.5} \text{ or } \frac{15}{30}.\frac{T_e}{T_f} = \frac{1}{2.5}$$

$$\text{or } \frac{T_e}{T_f} = 0.8 \qquad \text{(iv)}$$

From (iii) and (iv), $1.8T_f = 45$ or $T_f = 25$

and $T_e = 45 - 25 = 20$

$$\text{Speed ratio} = \frac{T_b}{T_a}.\frac{T_f}{T_e} = \frac{30}{15}.\frac{25}{20} = 2.5$$

Third Gear The transmission is from A to B and from C to D.

$$T_c + T_d = T_a + T_b = 45 \qquad \text{(v)}$$

$$\text{The train value} = \frac{T_a}{T_b}.\frac{T_c}{T_d} = \frac{1}{1.5} \text{ or } \frac{15}{30}.\frac{T_c}{T_d} = \frac{1}{1.5}$$

$$\text{or } \frac{T_c}{T_d} = 1.333 \qquad \text{(vi)}$$

From (v) and (vi), $2.333\ T_d = 45$ or $T_d = 19.3$ say 19 teeth

and $T_c = 45 - 19 = 26$

$$\text{Speed ratio} = \frac{T_b}{T_a}.\frac{T_d}{T_c} = \frac{30}{15}.\frac{19}{26} = 1.46$$

Top Gear Gear D is engaged directly with the gear A through a dog clutch to obtain a speed ratio of 1. This way the power is transmitted directly to the driven shaft and the driven shaft runs at the same speed as the driving shaft.

Example 11.19 *In the pre-selective gear-box shown in Fig. 11.28, the number of teeth are:*

$T_{A1} = T_{A2} = 72 \quad T_{S1} = T_{S2} = 22$

$T_{A3} = 63 \quad T_{S3} = 19$

$T_{A4} = 81 \quad T_{S4} = 37$

If the input shaft E rotates at a uniform speed of 800 rpm, determine the speeds of the output shaft F when different gears are engaged.

Solution *When the first gear is engaged*

$$N_{a1} = \frac{N_{S1}T_{S1}}{T_{A1}+T_{S1}} = \frac{800\times 22}{72+22} = 187.2$$

or $N_F = \underline{187.2 \text{ rpm}}$

When the second gear is engaged

$$N_{a2} = \frac{N_{S2}T_{S2}}{T_{A2}+T_{S2}} = \frac{800\times 22}{72+22} = 187.2$$

$$N_{a1} = \frac{N_{A1}T_{A1}+N_{S1}T_{S1}}{T_{A1}+T_{S1}} = \frac{N_{a2}T_{A1}+N_{S1}T_{S1}}{T_{A1}+T_{S1}}$$

$$= \frac{187.2\times 72+800\times 22}{72+22}$$

or $N_F = N_{a1} = \underline{330.6 \text{ rpm}}$

When the third gear is engaged

$$N_{a3} = \frac{N_{A3}T_{S3}}{T_{A3}+T_{S3}} = \frac{63N_{A3}}{63+19} = \frac{63N_{A3}}{82}$$

or

$$N_{A3} = \frac{82N_{a3}}{63}$$

$$N_{a2} = \frac{N_{A2}T_{A2}+N_{S2}T_{S2}}{T_{A2}+T_{S2}}$$

$$= \frac{N_{a3}T_{A2}+N_{S2}T_{S2}}{T_{A2}+T_{S2}} \qquad (N_{A2}=N_{a3})$$

$$= \frac{\frac{63N_{A3}}{82}T_{A2}+N_{S2}T_{S2}}{T_{A2}+T_{S2}}$$

$$= \frac{\frac{63N_{a2}}{82}T_{A2}+N_{S2}T_{S2}}{T_{A2}+T_{S2}} \qquad (N_{a2}=N_{A3})$$

$$= \frac{\frac{63N_{a2}}{82}\times 72+800\times 22}{72+22}$$

or $94N_{a2} = 55.32N_{a2} + 17\,600$

or $38.68\,N_{a2} = 17\,600$

or $N_{a2} = 455 = N_{A1}$

$$N_{a1} = \frac{N_{A1}T_{A1}+N_{S1}T_{S1}}{T_{A1}+T_{S1}} = \frac{455\times 72+800\times 22}{94}$$

or $N_F = N_{a1} = \underline{535.7 \text{ rpm}}$

When the fourth gear is engaged

$N_F = N_E = \underline{800 \text{ rpm}}$

In the reverse gear

$$N_{a4} = \frac{N_{S4}T_{S4}}{T_{A4}+T_{S4}} \qquad (N_{A4}=0)$$

or

$$N_{a4} = \frac{37N_{S4}}{81+37} = \frac{37N_{S4}}{118}$$

$$N_{a1} = \frac{N_{A1}\times 72+800\times 22}{94}$$

But

$N_{a4} = N_{a1}$ and $N_{S4} = N_{A1}$

$$\frac{37N_{S4}}{118} = \frac{72N_{S4}+17\,600}{94}$$

or $0.452\,N_{S4} = -187.23$

or $N_{S4} = -413.9$

$$N_F = N_{a4} = -\frac{37\times 413.9}{118} = \underline{-129.8 \text{ rpm}}$$

11.11 DIFFERENTIALS

Differential means to differentiate which may be between two speeds or two values or two readings. Differentials are usually two-degree-of-freedom mechanisms in which two inputs or coordinates must be defined to obtain a definite output.

Automotive Differential

When a vehicle takes a turn, the outer wheels must travel farther than the inner wheels. In automobiles, the front wheels can rotate freely on their axes and thus can adapt themselves to the conditions. However, both rear wheels are driven by the engine through gearing. Therefore, some sort of automatic device is necessary so that the two rear wheels are driven at slightly different speeds. This is accomplished by fitting a *differential gear* on the rear axle.

The fact that an epicyclic gear has two degrees of freedom has been utilised in the differential gear of an automobile. It permits the two wheels to rotate at the same speed when driving in straight while allowing the wheels to rotate at different speeds when taking a turn. Thus, a differential gear is a device which adds or subtracts angular displacements.

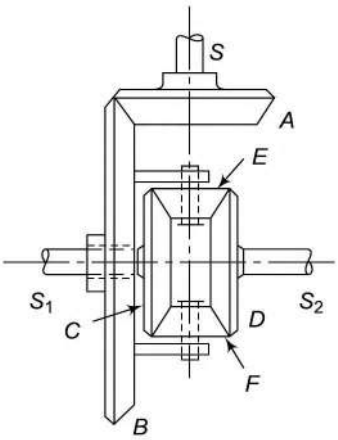

Fig. 11.30

Differential of an automobile

Figure 11.30 shows the arrangement of gears in the differential of an automobile. The shaft S is driven by the engine through the gear-box and has a bevel pinion A keyed to it. The bevel pinion A meshes with a bevel wheel B which turns loosely on the hub of the gear C. Shafts S_1 and S_2 form the rear axle to which are fixed the rear wheels of the automobile. Gears C and D are keyed to the shafts S_1 and S_2 respectively. C and D gear with equal bevel pinions E and F which are free to rotate on their respective axes. The wheel B carries two brackets that support the bearings for gear S E and F.

When the automobile moves in a straight path, the bevel pinion A drives the wheel B. The whole differential acts as one unit and rotates with the bevel wheel B so that the wheels C and D rotate with the same speed and in the same direction as B. There is no relative motion between gears C and D, and E and F. Gears E and F also do not rotate about their own axes. They act just like keys to transmit motion from B to C and D. Thus, C and D, which are keyed to the shafts that carry the wheels, rotate at the same speed as B.

When a turn is taken, E and F rotate about their own axes and the system works as an epicyclic gear giving two outputs at C and D with one input at B. Prepare a table as below:

Action	*B*	*C/S₁*	*D/S₂*	*E/F*
B fixed, $C + 1$ rev.	0	1	–1	$\frac{T_C}{T_E}$
B fixed, $C + x$ rev.	0	x	$-x$	$\frac{T_C}{T_E}x$
Add y	y	$y + x$	$y - x$	$\frac{T_C}{T_E}x + y$

From the above table, it can be observed that the speed of B is the arithmetical mean of the speeds of C and D, because $y = \{(y + x) + (y - x)\}/2$. This shows that while taking a turn, if the speed of C decreases than that of B, there will be a corresponding increase in the speed of D.

Example 11.20 *In the differential gear of a car shown in Fig. 11.30, the number of teeth on the pinion A on the propeller shaft is 18 whereas the crown gear B has 90 teeth. If the propeller shaft rotates at 1200 rpm and the wheel attached to the shaft S_2 has a speed of 255 rpm, while the vehicle takes a turn, determine the speed of the wheel attached to the shaft S_1.*

Solution

Speed of the gear $B = N_A \times \dfrac{T_B}{T_A} = 1200 \times \dfrac{18}{90}$

$= 240$ rpm

Thus, $y = 240$

Prepare the table as in the above section.

Speed of $S_2 = y - x = 255$

or $240 - x = 255$

or $x = -15$

Speed of $S_1 = y + x = 240 - 15 = \underline{225 \text{ rpm}}$

Summary

1. A gear train is a combination of gears used to transmit motion from one shaft to another.
2. The main types of gear trains are *simple*, *compound*, *reverted* and *planetary* or *epicyclic*.
3. A series of gears, capable of receiving and transmitting motion from one gear to another is called a *simple gear train*. All the gear axes remain fixed relative to the frame and each gear is on a separate shaft.
4. When a series of gears are connected in such a way that two or more gears rotate about an axis with the same angular velocity, it is known as a *compound gear train*.
5. If the axes of the first and the last wheels of a compound gear coincide, it is called a *reverted gear train*.
6. A gear train having a relative motion of axes is called a *planetary* or an *epicyclic gear train* (or simply epicyclic gear or train). Thus, in an epicyclic train, the axis of at least one of the gears also moves relative to the frame.
7. In general, gear trains have two degrees of freedom. However, the number of inputs can be reduced to one, if one wheel of the train is fixed. That amounts to reducing the speed of that gear wheel to zero.
8. Large speed reductions are possible with epicyclic gears and if the fixed wheel is annular, a more compact unit could be obtained.
9. When an annular wheel is added to the epicyclic gear train, the combination is usually referred as *sun and planet gear*.
10. When an epicyclic gear consists of a number of sun and planet gears in series such that the pin of the arm of the first drives an element of another, it is known as a *compound epicyclic gear*.
11. A simple sliding gear box makes use of a compound gear train and is engaged by sliding the gears on the driven shaft to mesh with the gears on a lay shaft.
12. A pre-selective gear-box is a device by which three or four different speeds of the automobile can be obtained. It makes use of sun and planet gears.
13. A differential of an automobile permits the two wheels of a vehicle to rotate at the same speed when driving in straight while allowing the wheels to rotate at different speeds when taking a turn. Thus, a differential gear is a device which adds or subtracts angular displacements.

Exercises

1. What is a gear train? What are its main types?
2. What is the difference between a simple gear train and a compound gear train? Explain with the help of sketches.
3. What is a reverted gear train? Where is it used?
4. Explain the procedure to analyse an epicyclic gear train.

5. What do you mean by braking or the fixing torque of a gear in an epicyclic gear train?
6. What is a sun and planet gear? Give the procedure to analyse such a gear train?
7. What do you mean by a compound epicyclic gear?
8. Sketch a sliding gear box and explain its working.
9. Describe the function of a pre-selective gear-box of an automobile.
10. What do you mean by differentials? Give examples.
11. What is a differential gear of an automobile? How does it function?
12. A compound train consists of four gears. The number of teeth on gears *A*, *B* , *C* and *D* are 54, 75, 36 and 81 respectively. Gears *B* and *C* constitute a compound gear. Determine the torque on the output shaft if the gear *A* transmits 9 kW at 200 rpm and the train efficiency is 80%.

(1.074 kN.m)

13. An epicyclic gear consists of a pinion, a wheel of 40 teeth and an annulus with 84 internal teeth concentric with the wheel. The pinion gears with the wheel and the annulus. The arm that carries the axis of the pinion rotates at 100 rpm. If the annulus is fixed, find the speed of the wheel; if wheel is fixed, find the speed of the annulus.

(310 rpm; 147.6 rpm)

14. In an epicyclic gear shown in Fig. 11.12, the pitch circle diameter of the annulus *A* is to be approximately 324 mm and the module is to be 6 mm. When the annulus is stationary, the three-armed spider makes one revolution for every five revolutions of the wheel *S*. Find the number of teeth for all the wheels and exact pitch circle diameter of the annulus. If a torque of 30 N.m is applied to the shaft carrying *S*, determine the fixing torque of the annulus.

(T_S = 14, T_P =21, T_A = 56; 120 N.m)

15. Determine a suitable train of wheels to satisfy the requirements of a clock, the minute hand of which is fixed to a spindle and the hour hand to a sleeve rotating freely on the same spindle. The pitch is the same for all the wheels and each wheel has at least 11 teeth. The total number of teeth should be as small as possible.

(12, 48 and 15, 45)

16. The pinion *S* (Fig. 11.13) has 15 teeth, and is rigidly fixed to a motor shaft. The wheel *P* has 20 teeth and gears with *S* and also with a fixed annulus wheel *A*. The pinion *C* has 15 teeth and is fixed to the wheel *P*. *C* gears with the annular wheel *D*, which is keyed to a machine shaft. *P* and *C* can rotate together on a pin carried by an arm which rotates about the shaft on which *S* is fixed. Find the speed of the machine shaft if the motor rotates at 1000 rpm.

(37.15 rpm in the same direction as *S*)

17. In an epicyclic gear (Fig. 11.12), the wheel *A* has also external teeth and is driven by a pinion *B*. The number of teeth on *S* = number of teeth on *B* = one fourth of number of teeth on *A*. The wheel *A* has same number of teeth internally and externally.

Determine the speed of the driven shaft fixed to the arm *a*, when *B* makes 600 rpm in the same direction as *S* whose speed is 400 rpm. Also, find the speed and direction of rotation of *B* if the driven shaft rotates at the same speed as above but in the opposite direction.

(40 rpm in a direction opposite to *S*;
200 rpm in direction of *S*)

18. Figure 11.31 shows an epicyclic train known as Ferguson's paradox. The gears have number of teeth as indicated. Gear 1 is fixed to the frame and is stationary. The arm *a* and the gears 2 and 3 are free to rotate on the shafts. The pitch circle diameters of all are the same so that the planet gear *P* meshes with them all. Find the number of revolutions of gears 2 and 3 for one revolution of arm *a*.

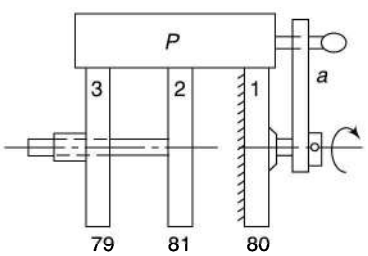

Fig. 11.31

(2 makes 1/81 revs. in the same direction and 3 makes 1/79 revs in the opposite direction of arm *a*)

Note: If the three gears 1, 2 and 3 have the same diameter, their pitches must be slightly different and theoretically, the drive will not be perfect.

19. In the epicyclic gear of Fig. 11.15, T_S = 40. T_P = 20 and T_A = 80. If the sun gear rotates at 150 rpm counter-clockwise and the annular ring clockwise at 400 rpm, find the arm speed.

(216.7 rpm clockwise)

20. In an epicyclic gear (Fig. 11.32), the wheel *A* fixed to S_1 has 30 teeth and rotates at 500 rpm. *B* gears with *A* and is fixed rigidly to *C*, both being free to rotate on S_2. The wheels *B*, *C* and *D* have 50, 70 and 90 teeth respectively. If *D* rotates at 80 rpm in a direction opposite to that of *A*, find the speed of the shaft S_2. (104.5 rpm in same direction)

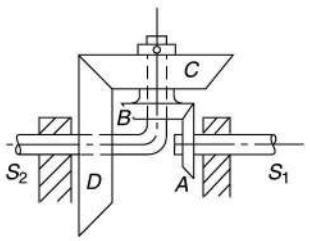

Fig. 11.32

21. In an indexing mechanism of a milling machine (Fig. 11.30), the drive is from gear wheels fixed to shafts S_1 and S_2 to the bevel *A* through the gear train. The number of teeth of *A, B, D* and *F* are 30, 60, 28 and 24 respectively. Each gear has a module of 10 mm.
Determine the number of revolutions of *S* (or *A*) for one revolution of S_1 when
(a) S_1 and S_2 have same speed in the same direction
(b) S_1 and S_2 have same speed in the opposite direction
(c) S_1 makes 48 rpm and S_2 is at rest
(d) S_1 makes 48 rpm and S_2 24 rpm in the same direction
(2; zero; 48 rpm; 72 rpm)

22. Show that in a Humpage reduction gear (Fig. 11.24), the wheel *E* rotates in the same direction as the wheel *B* if T_C/T_D is more than T_F/T_E and in the opposite direction if the same is less than T_F/T_E. Gear *F* is the fixed frame.

23. In a sun and planet gear train, the sun gear wheel having 60 teeth is fixed to the frame. Determine the numbers of teeth on the planet and the annulus wheels if the annulus rotates 130 times and the arm rotates 100 times, both in the same direction.
(70; 200)

24. A four-speed sliding gear box of an automobile is to be designed to give approximate speed ratios of 4, 2.4, 1.4 and 1 for the first, second, third and top gears respectively. The input and the output shafts have the same alignment. Horizontal central distance between them and the lay shaft is 98 mm. The teeth have a module of 4 mm. No wheel has less than 16 teeth. Calculate suitable number of teeth on each wheel and find the actual speed ratios attained.

25. In the pre-selective gear-box shown in Fig. 11.28, the number of teeth are
$T_{A1} = T_{A2} = 80$ $\quad T_{S1} = T_{S2} = 24$
$T_{A3} = 68$ $\quad T_{S3} = 21$
$T_{A4} = 90$ $\quad T_{S4} = 41$
If the input shaft *E* rotates at a uniform speed of 640 rpm, determine the speeds of the output shaft *F* when different gears are engaged.
(147.7 rpm, 261.3 rpm, 423 rpm, 640 rpm, 101.4 rpm)

26. In the differential gear of a car shown in Fig. 11.30, the number of teeth on the pinion *A* on the propeller shaft is 24 whereas the crown gear *B* has 128 teeth. If the propeller shaft rotates at 800 rpm and the wheel attached to the shaft S_2 has a speed of 175 rpm, determine the speed of the wheel attached to shaft S_1 when the vehicle takes a turn.
(125 rpm)

12 STATIC FORCE ANALYSIS

Introduction

In all types of machinery, forces are transmitted from one component to the other such as from a belt to a pulley, from a brake drum to a brake shoe, from a gear to shaft. In the design of machine mechanisms, it is necessary to know the magnitudes as well as the directions of forces transmitted from the input to the output. The analysis helps in selecting proper sizes of the machine components to withstand the stresses developed in them. If proper sizes are not selected, the components may fail during the machine operations. On the other hand, if the members are designed to have more strength than required, the machine may not be able to compete with others due to more cost, weight, size, etc.

If the components of a machine accelerate, inertia forces are produced due to their masses. However, if the magnitudes of these forces are small compared to the externally applied loads, they can be neglected while analysing the mechanism. Such an analysis is known as *static-force analysis*. For example, in lifting cranes, the bucket load and the static weight loads may be quite high relative to any dynamic loads due to accelerating masses, and thus static-force analysis is justified.

When the inertia effect due to the mass of the components is also considered, it is called *dynamic-force analysis* which will be dealt in the next chapter.

12.1 CONSTRAINT AND APPLIED FORCES

A pair of action and reaction forces which constrain two connected bodies to behave in a particular manner depending upon the nature of connection are known as *constraint forces* whereas forces acting from outside on a system of bodies are called *applied forces.*

Constraint forces As the constraint forces at a mechanical contact occur in pairs, they have no net force effect on the system of bodies. However, for an individual body isolated from the system, only one of each pair of constraint forces has to be considered.

Applied forces Usually, these forces are applied through direct physical or mechanical contact. However, forces like electric, magnetic and gravitational are applied without actual physical contact.

12.2 STATIC EQUILIBRIUM

A body is in static equilibrium if it remains in its state of rest or motion. If the body is at rest, it tends to remain at rest and if in motion, it tends to keep the motion. In static equilibrium

- the vector sum of all the forces acting on the body is zero, and
- the vector sum of all the moments about any arbitrary point is zero.

Mathematically,

$$\Sigma \mathbf{F} = 0 \tag{12.1}$$

$$\Sigma \mathbf{T} = 0 \tag{12.2}$$

In a planer system, forces can be described by two-dimensional vectors and, therefore,

$$\Sigma \mathbf{F}_x = 0 \tag{12.3}$$

$$\Sigma \mathbf{F}_y = 0 \tag{12.4}$$

$$\Sigma \mathbf{T}_z = 0 \tag{12.5}$$

12.3 EQUILIBRIUM OF TWO- AND THREE-FORCE MEMBERS

A member under the action of two forces will be in equilibrium if

- the forces are of the same magnitude,
- the forces act along the same line, and
- the forces are in opposite directions.

Figure 12.1 shows such a member.

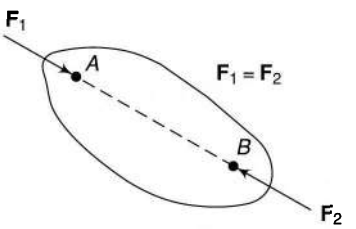

Fig. 12.1

A member under the action of three forces will be in equilibrium if

- the resultant of the forces is zero, and
- the lines of action of the forces intersect at a point (known as *point of concurrency*).

Figure 12.2 (a) shows a member acted upon by three forces $\mathbf{F}_1$, $\mathbf{F}_2$ and $\mathbf{F}_3$ and is in equilibrium as the lines of action of forces intersect at one point O and the resultant is zero. This is verified by adding the forces vectorially [Fig. 12.2 (b)]. As the head of the last vector $\mathbf{F}_3$ meets the tail of the first vector $\mathbf{F}_1$, the resultant is zero. It is not necessary to add the three vectors in order to obtain the resultant as is shown in Fig. 12.2 (c) in which $\mathbf{F}_2$ is added to $\mathbf{F}_3$ and then $\mathbf{F}_1$is taken.

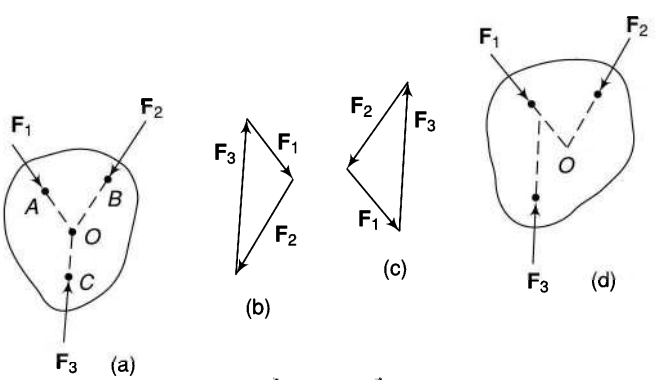

Fig. 12.2

Figure 12.2 (d) shows a case where the magnitudes and directions of the forces are the same as before, but the lines of action of the forces do not intersect at one point. Thus, the member is not in equilibrium.

Consider a member in equilibrium in which the force $\mathbf{F}_1$ is completely known, $\mathbf{F}_2$ is known in direction only and $\mathbf{F}_3$ is completely unknown. The point of applications of $\mathbf{F}_1$, $\mathbf{F}_2$ and $\mathbf{F}_3$ are A, B and C respectively. To solve such a problem, first find the point of concurrency O from the two forces with known directions, i.e., from $\mathbf{F}_1$ and $\mathbf{F}_2$. Joining O with C gives the line of action of the third force $\mathbf{F}_3$. To know the magnitudes of the forces $\mathbf{F}_2$ and $\mathbf{F}_3$, take a vector of proper magnitude and direction to represent the force $\mathbf{F}_1$. From its two ends, draw lines parallel to the lines of action of the forces $\mathbf{F}_2$ and $\mathbf{F}_3$ forming a force triangle [Figs 12.2 (b) or (c). Mark arrowheads on $\mathbf{F}_2$ and $\mathbf{F}_3$ so that $\mathbf{F}_1$, $\mathbf{F}_2$ and $\mathbf{F}_3$ are in the same order.

If the lines of action of two forces are parallel then the point of concurrency lies at infinity and, therefore, the third force is also parallel to the first two.

12.4 MEMBER WITH TWO FORCES AND A TORQUE

A member under the action of two forces and an applied torque will be in equilibrium if

- the forces are equal in magnitude, parallel in direction and opposite in sense, and
- the forces form a couple which is equal and opposite to the applied torque.

Figure 12.3 shows a member acted upon by two equal forces $\mathbf{F}_1$ and $\mathbf{F}_2$ and an applied torque **T**. For equilibrium,

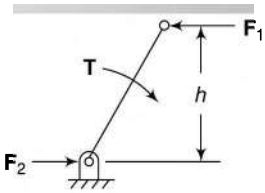

Fig. 12.3

$$T = F_1 \times h = F_2 \times h \tag{12.6}$$

where T, F_1 and F_2 are the magnitudes of **T**, $\mathbf{F}_1$ and $\mathbf{F}_2$ respectively. **T** is clockwise whereas the couple formed by $\mathbf{F}_1$ and $\mathbf{F}_2$ is counter-clockwise.

12.5 EQUILIBRIUM OF FOUR-FORCE MEMBERS

Normally, in most of the cases the above conditions for equilibrium of a member are found to be sufficient. However, in some problems, it may be found that the number of forces on a member is four or even more than that. In such cases, first look for the forces completely known and combine them into a single force representing the sum of the known forces. This may reduce the number of forces acting on a body to two or three. However, in planer mechanisms, a four-force system is also solvable if one force is known completely along with lines of action of the others. The following examples illustrate the procedure.

Example 12.1 *Figure 12.4(a) shows a quaternary link ABCD under the action of forces $\mathbf{F}_1$, $\mathbf{F}_2$, $\mathbf{F}_3$, and $\mathbf{F}_4$ acting at A, B, C and D respectively. The link is in static equilibrium. Determine the magnitude of the forces $\mathbf{F}_2$ and $\mathbf{F}_3$ and the direction of $\mathbf{F}_3$.*

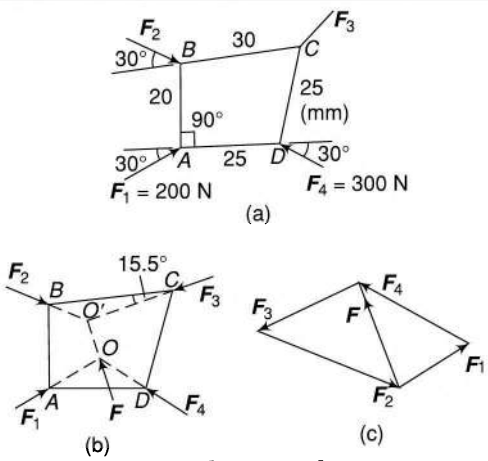

Fig. 12.4

Solution The forces $\mathbf{F}_1$ and $\mathbf{F}_4$ can be combined into a single force **F** by obtaining their resultant [Figs 12.4(b) and (c)]. The force **F** acts through O, the point where lines of action of $\mathbf{F}_1$ and $\mathbf{F}_4$ meet.

Now, the four-force member $ABCD$ is reduced to a three-force member under the action of forces **F** (completely known), $\mathbf{F}_2$ (only the direction known) and $\mathbf{F}_3$ (completely unknown).

Let **F** and $\mathbf{F}_2$ meet at O'. Then CO' is the line of action of force $\mathbf{F}_3$. By completing the force triangle, obtain the magnitude of $\mathbf{F}_2$ and $\mathbf{F}_3$.

Magnitude of $\mathbf{F}_2$ = <u>380 N</u>

Magnitude of $\mathbf{F}_3$ = <u>284 N</u>

Line of action of force $\mathbf{F}_3$ makes an angle of 15.5° with CB.

Example 12.2 *Figure 12.5(a) shows a cam with a reciprocating-roller follower system. Various forces acting on the follower are indicated in the figure. At the instant, an external force $\mathbf{F}_1$ of 40 N, a spring force $\mathbf{F}_2$ of*

15 N and cam force F_5 of unknown magnitude act on it along the lines of action as shown. F_3 and F_4 are the bearing reactions. Determine the magnitudes of the forces F_3, F_4 and F_5. Assume no friction.

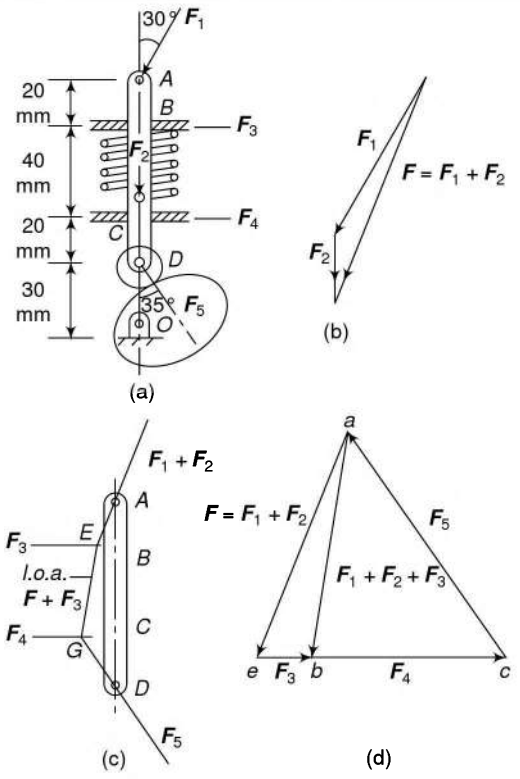

Fig. 12.5

Solution As in the previous example, forces $\mathbf{F}_1$ and $\mathbf{F}_2$ can be combined into a single force $\mathbf{F}$ by obtaining their resultant [Figs 12.5(b)]. Their resultant must pass through point A, the point of intersection of $\mathbf{F}_1$ and $\mathbf{F}_2$. Thus, the number of forces acting on the body is reduced to four.

Now, assume that the magnitude of force $\mathbf{F}_3$ is known and the force $\mathbf{F}$ is to be combined with it. Then the resultant must pass through their point of intersection, i.e., the point E [Fig. 12.5(c)]. This way, the body becomes under the action of three forces which must be concurrent for the equilibrium of the body. Thus, the resultant of $\mathbf{F}$ and $\mathbf{F}_3$ must pass through the point G, the point of intersection of the forces $\mathbf{F}_4$ and $\mathbf{F}_5$. Therefore, the line of action of the resultant of $\mathbf{F}$ and $\mathbf{F}_3$ is EG.

Now since the force $\mathbf{F}$ is completely known and the lines of action of $\mathbf{F}_3$ and their resultant are known, the force diagram can be made. First take the force $\mathbf{F}$ and then to add $\mathbf{F}_3$ draw a line parallel to its line of action through the head of $\mathbf{F}$ [Fig. 12.5(d)]. Through the tail of vector $\mathbf{F}$ draw a line parallel to the line of action of the resultant. The triangle *aeb* thus provides the magnitude of the force $\mathbf{F}_3$ as well as resultant of $\mathbf{F}_1$, $\mathbf{F}_2$ and $\mathbf{F}_3$.

Now the number of forces acting on the body is reduced to three. One force is completely known and the lines of action of the other two are known. A triangle of forces can be drawn and magnitudes of $\mathbf{F}_3$, $\mathbf{F}_4$ and $\mathbf{F}_5$ can be found.

Magnitude of $\mathbf{F}_3 = 12$ N
Magnitude of $\mathbf{F}_4 = 42$ N
Magnitude of $\mathbf{F}_5 = 60$ N

12.6 FORCE CONVENTION

The force exerted by the member i on the member j is represented by $\mathbf{F}_{ij}$.

12.7 FREE-BODY DIAGRAMS

A free-body diagram is a sketch or diagram of a part isolated from the mechanism in order to determine the nature of forces acting on it.

Figure 12.6(a) shows a four-link mechanism. The free-body diagrams of its members 2, 3 and 4 are shown in Figs 12.6 (b) (c) and (d) respectively. Various forces acting on each member are also shown. As the mechanism is in static equilibrium, each of its members must be in equilibrium individually.

Member 4 is acted upon by three forces **F**, $\mathbf{F}_{34}$ and $\mathbf{F}_{14}$.

Member 3 is acted upon by two forces $\mathbf{F}_{23}$ and $\mathbf{F}_{43}$.

Member 2 is acted upon by two forces $\mathbf{F}_{32}$ and $\mathbf{F}_{12}$ and a torque **T**.

Initially, the direction and the sense of some of the forces may not be known.

Assume that the force **F** on the member 4 is known completely. To know the other two forces acting on this member completely, the direction of one more force must be known.

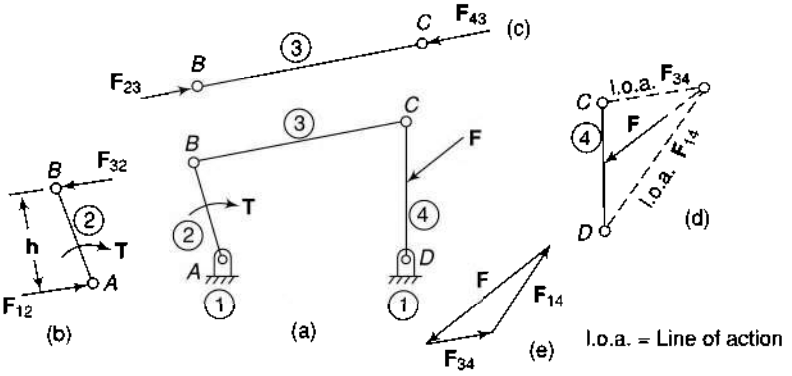

Fig. 12.6

Link 3 is a two-force member and for its equilibrium, $\mathbf{F}_{23}$ and $\mathbf{F}_{43}$ must act along *BC*. Thus, $\mathbf{F}_{34}$, being equal and opposite to $\mathbf{F}_{43}$, also acts along *BC*. For the member 4 to be in equilibrium, $\mathbf{F}_{14}$ passes through the intersection of **F** and $\mathbf{F}_{34}$. By drawing a force triangle (**F** is completely known), magnitudes of $\mathbf{F}_{14}$ and $\mathbf{F}_{34}$ can be known [Fig.12.6 (e)].

Now $$F_{34} = F_{43} = F_{23} = F_{32}$$

Member 2 will be in equilibrium if $\mathbf{F}_{12}$ is equal, parallel and opposite to $\mathbf{F}_{32}$ and

$$T = F_{12} \times h = F_{32} \times h$$

12.8 SUPERPOSITION

In linear systems, if a number of loads act on a system of forces, the net effect is equal to the superposition of the effects of the individual loads taken one at a time. A linear system is one in which the output force is directly proportional to the input force, i.e., in mechanisms where coulomb or dry friction is neglected.

Example 12.3 *A slider-crank mechanism with the following dimensions is acted upon by a force F = 2 kN at B as shown in Fig. 12.7(a):*

OA = 100 mm, AB = 450 mm.

Determine the input torque T on the link OA for the static equilibrium of the mechanism for the given configuration.

Solution As the mechanism is in static equilibrium, each of its members must also be in equilibrium individually.

Member 4 is acted upon by three forces **F**, $\mathbf{F}_{34}$ and $\mathbf{F}_{14}$ [Fig. 12.7(b)].

Member 3 is acted upon by two forces $\mathbf{F}_{23}$ and $\mathbf{F}_{43}$ [Fig. 12.7(c)].

Member 2 is acted upon by two forces $\mathbf{F}_{32}$ and $\mathbf{F}_{12}$ and a torque **T** [Fig. 12.7(d)].

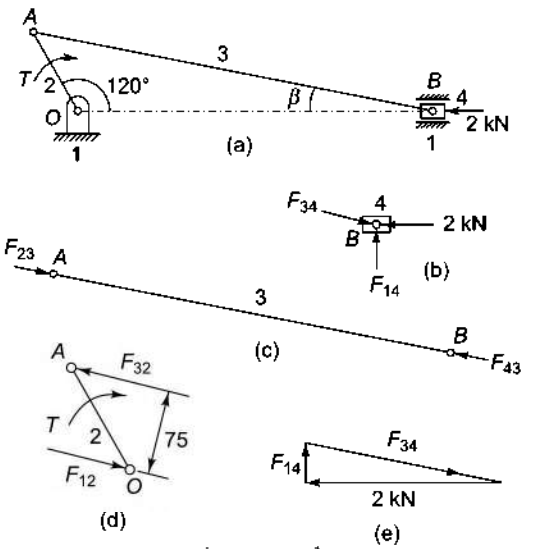

Fig. 12.7

Initially, the direction and the sense of some of the forces are not known.

Now, adopt the following procedure:

- Force **F** on member 4 is known completely (= 2 kN, horizontal). To know the other two forces acting on this member completely, the direction of one more force must be known. To know that, the link 3 will have to be considered first which is a two-force member.
- As the link 3 is a two-force member, for its equilibrium, $\mathbf{F}_{23}$ and $\mathbf{F}_{43}$ must act along *AB* (at this stage, the sense of direction of forces $\mathbf{F}_{23}$ and $\mathbf{F}_{43}$ is not known). Thus, the line of action of $\mathbf{F}_{34}$ on member 4 is also along *AB*.
- As force $\mathbf{F}_{34}$ acts through the point *B* on the link 4, draw a line parallel to *BC* through *B* by taking a free body of the link 4 to represent the same. Now, since the link 4 is a three-force member, the third force $\mathbf{F}_{14}$ passes through the intersection of **F** and $\mathbf{F}_{34}$ [Fig. 12.7(b)]. By drawing a force triangle (**F** is completely known), magnitudes of $\mathbf{F}_{14}$ and $\mathbf{F}_{34}$ are known [Fig.12.7 (e)].

From force triangle,

$$F_{34} = 2.04 \text{ kN}$$

Now, $\quad F_{34} = -F_{43} = F_{23} = -F_{32}$

Member 2 will be in equilibrium [Fig. 12.7(e)] if $\mathbf{F}_{12}$ is equal, parallel and opposite to $\mathbf{F}_{32}$ and

$T = F_{32} \times h = 2.04 \times 75 = -153$ kN.mm

(h = 75 mm on measurement)

The input torque has to be equal and opposite to this couple i.e.,

T = <u>153 kN.mm</u> or <u>153 N.m</u> (clockwise)

Analytical solution

$$\cos\beta = \frac{1}{n}\sqrt{n^2 - \sin^2\theta} = \frac{1}{4.5}\sqrt{4.5^2 - \sin^2 120°}$$

$= 0.981$

or $\beta = 11.1°$ (Refer Section 13.5)

$F_{34} \cos 11.1° = 2$ or $F_{34} = 2.04$ kN

$\angle OAB = 180° - 120° - 11.1° = 48.9°$

$\therefore\ T = F_{32} \times h = 2.04 \times 100 \sin 48.9°$

$= 153.7$ kN.mm

- The direction and senses of forces in the analytical solution can be known by drawing rough figures instead of drawing these to the scale.

Example 12.4 *A four-link mechanism with the following dimensions is acted upon by a force 80 ∠150° N on the link DC [Fig. 12.8(a)]:*

AD = 500 mm, AB = 400 mm, BC = 1000 mm, DC = 750 mm, DE = 350 mm

Determine the input torque T on the link AB for the static equilibrium of the mechanism for the given configuration.

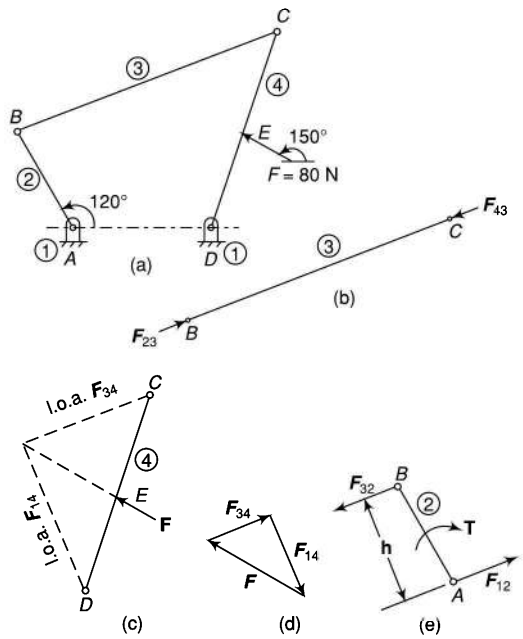

Fig. 12.8

Solution As the mechanism is in static equilibrium, each of its members must also be in equilibrium individually.

Member 4 is acted upon by three forces **F**, $\mathbf{F}_{34}$ and $\mathbf{F}_{14}$.

Member 3 is acted upon by two forces $\mathbf{F}_{23}$ and $\mathbf{F}_{43}$.

Member 2 is acted upon by two forces $\mathbf{F}_{32}$ and $\mathbf{F}_{12}$ and a torque **T**.

Initially, the direction and the sense of some of the forces are not known.

Now, adopt the following procedure:

- Force **F** on the member 4 is known completely. To know the other two forces acting on this member completely, the direction of one more

force must be known. To know that, the link 3 will have to be considered first which is a two-force member.

- As the link 3 is a two-force member (Fig. 12.8b), for its equilibrium, $\mathbf{F}_{23}$ and $\mathbf{F}_{43}$ must act along *BC* (at this stage, the sense of direction of forces $\mathbf{F}_{23}$ and $\mathbf{F}_{43}$ is not known). Thus, the line of action of $\mathbf{F}_{34}$ is also along *BC*.
- As the force $\mathbf{F}_{34}$ acts through the point *C* on the link 4, draw a line parallel to *BC* through *C* by taking a free body of the link 4 to represent the same. Now, as the link 4 is a three-force member, the third force $\mathbf{F}_{14}$ passes through the intersection of **F** and $\mathbf{F}_{34}$ as the three forces are to be concurrent for equilibrium of the link [Fig. 12.8(c)]. By drawing a force triangle *F* is completely known), magnitudes of $\mathbf{F}_{14}$ and $\mathbf{F}_{34}$ are known [Fig.12.8 (d)].

From force triangle,

$$F_{34} = 47.8 \text{ N}$$

Now, $F_{34} = -F_{43} = F_{23} = -F_{32}$

Member 2 will be in equilibrium [Fig. 12.8(e)] if $\mathbf{F}_{12}$ is equal, parallel and opposite to $\mathbf{F}_{32}$ and

$T = -F_{32} \times h = -47.8 \times 393 = -18\,780$ N.mm

The input torque has to be equal and opposite to this couple i.e.,

$T =$ 18.78 N.m (clockwise)

Analytical Method

First of all, the angular inclinations of the links *BC* and *DC*, i.e., angles β and ϕ are to be determined. This may be done by drawing the configuration or by analytical means (Section 4.1).

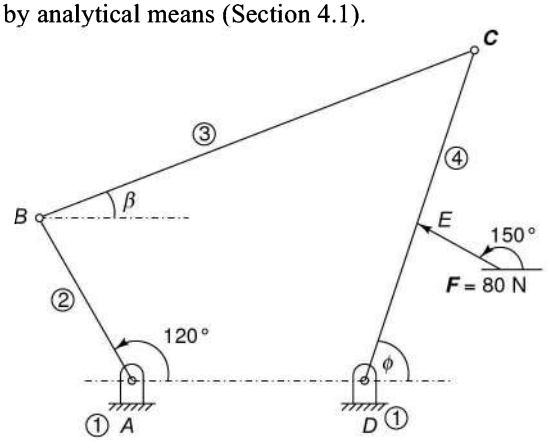

Fig. 12.9

We have (Fig. 12.9),

$2k = a^2 - b^2 + c^2 + d^2$

$k = (0.4^2 - 1^2 + 0.75^2 + 0.5^2)/2 = -0.01375$

$A = k - a\,(d - c) \cos\theta - cd = -0.01375 - 0.4\,(0.5 - 0.75) \cos 120^\circ - 0.75 \times 0.5 = -0.439$

$B = -2ac \sin\theta = -2 \times 0.4 \times 0.75 \sin 120^\circ$
$= -0.52$

$C = k - a\,(d + c) \cos\theta + cd$
$= -0.01375 - 0.4\,(0.5 + 0.75) \cos 120^\circ + 0.75 \times 0.5$
$= 0.611$

$$\varphi = 2\tan^{-1}\left[\frac{-B \pm \sqrt{B^2 - 4AC}}{2A}\right] \qquad \text{(Eq. 4.7)}$$

$$= 2\tan^{-1}\left[\frac{0.52 \pm \sqrt{(-0.52)^2 - 4 \times (-0.439)(0.611)}}{2 \times (-0.439)}\right]$$

$= 2\tan^{-1}(0.727 \text{ or } -0.439)$
$= 72^\circ \text{ or } -47.4^\circ$

Taking the first value (value in the first quadrant),

We have,

$$a \sin\theta + b \sin\beta = c \sin\varphi \qquad \text{(Eq. 4.3)}$$

$0.4 \times \sin 120^\circ + 1 \times \sin\beta = 0.75 \times \sin 72^\circ$

or $\sin\beta = 0.712$ or $\beta = 21.5^\circ$

Position vectors

$\mathbf{AB} = 0.4\,\angle 120^\circ$, $\mathbf{BC} = 1.0\,\angle 21.5^\circ$, $\mathbf{DC} = 0.75\,\angle 72^\circ$, $\mathbf{DE} = 0.35\,\angle 72^\circ$

The direction of $\mathbf{F}_{34}$ is along *BC* since it is a two-force member,

$\mathbf{F}_{34} = F_{34}\,\angle 21.5^\circ$

As the link *DC* is in static equilibrium, no resultant forces or moments are acting on it.

Taking moments of the forces about point *D*,

$$M_d = \mathbf{F}_4 \times \mathbf{DE} + \mathbf{F}_{34} \times \mathbf{DC} = \mathbf{0} \qquad \text{(i)}$$

Moments are the cross-multiplication of the vector, so it should be done in rectangular coordinates.

$\mathbf{F}_4 = 80\,\angle 150^\circ = -69.28\,\mathbf{i} + 40\,\mathbf{j}$

$\mathbf{DE} = 0.35\,\angle 72^\circ = 0.108\,\mathbf{i} + 0.333\,\mathbf{j}$

$\mathbf{F}_{34} = F_{34}\,\angle 21.5^\circ = F_{34}(0.93\,\mathbf{i} + 0.367\,\mathbf{j})$

$\mathbf{DC} = 0.75\,\angle 72^\circ = 0.232\,\mathbf{i} + 0.713\,\mathbf{j}$

Inserting the values of vectors in (i),

$(-69.28\,\mathbf{i} + 40\,\mathbf{j}) \times (0.108\,\mathbf{i} + 0.333\,\mathbf{j})$
$+ F_{34}(0.93\,\mathbf{i} + 0.367\,\mathbf{j}) \times (0.235\,\mathbf{i} + 0.712\,\mathbf{j}) = 0$

$$\text{or} \begin{vmatrix} \mathbf{i} & \mathbf{j} & \mathbf{k} \\ -69.28 & 40 & 0 \\ 0.108 & 0.333 & 0 \end{vmatrix} + \begin{vmatrix} \mathbf{i} & \mathbf{j} & \mathbf{k} \\ 0.93F_{34} & 0.367F_{34} & 0 \\ 0.232 & 0.713 & 0 \end{vmatrix} = 0$$

or $(-69.28 \times 0.333 - 40 \times 0.108) + (0.93\, F_{34} \times 0.713 - 0.367F_{34} \times 0.232)$

or $-27.4 + 0.58\, F_{34} = 0$ or $F_{34} = 47.3$ N

Thus, $\mathbf{F_{34}} = 47.3\angle 21.5^\circ$

Now, $\mathbf{F_{32}} = -\mathbf{F_{23}} = \mathbf{F_{43}} = -\mathbf{F_{34}} = 47.3\angle 21.5^\circ$

$\mathbf{F_{12}} = -\mathbf{F_{32}} = 47.3\angle 21.5^\circ$

$T_{2c} = \mathbf{F_{12}} \times \mathbf{AB} = 47.3\angle 21.5^\circ \times 0.4\ \angle 120^\circ = 18.9$ N.m

Example 12.5 *A four-link mechanism with the following dimensions is acted upon by a force of 50 N on the link DC at the point E (Fig. 12.10a):*

AD = 300 mm, AB = 400 mm, BC = 600 mm, DC = 640 mm, DE = 840 mm

Determine the input torque T on the link AB for the static equilibrium of the mechanism for the given configuration.

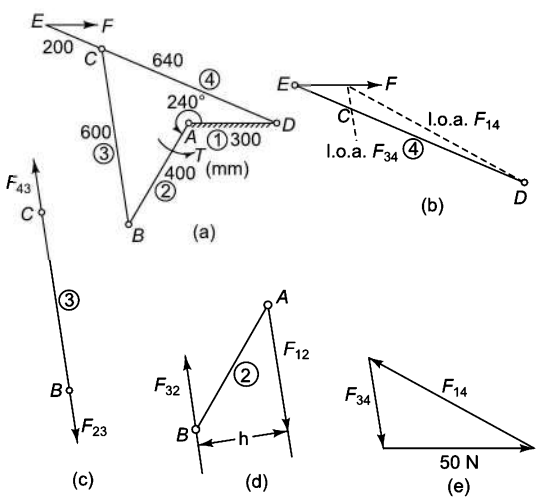

Fig. 12.10

Solution As the mechanism is in static equilibrium, each of its members must also be in equilibrium individually.

Member 4 is acted upon by three forces **F**, $\mathbf{F}_{34}$ and $\mathbf{F}_{14}$ [Fig. 12.10(b)]

Member 3 is acted upon by two forces $\mathbf{F}_{23}$ and $\mathbf{F}_{43}$ [Fig. 12.10(c)]

Member 2 is acted upon by two forces $\mathbf{F}_{32}$ and $\mathbf{F}_{12}$ and a torque **T** [Fig. 12.10(d)]

Initially, the direction and the sense of some of the forces are not known.

The procedure to solve the problem graphically is exactly similar to the previous example. In brief, the link 3 is a two-force member, so it provides the line of action of force $\mathbf{F}_{34}$ on the link 4. Since the link 4 is a three-force member and forces are to be concurrent, the lines of action of all the forces on the link 4 can be drawn. Then the force diagram provides the magnitude of various forces [Fig. 12.10(e)]. The rest of the procedure is self-explanatory.

From force triangle,

$F_{34} = 30.5$ N

Now, $\mathbf{F_{32}} = -\mathbf{F_{23}} = \mathbf{F_{43}} = -\mathbf{F_{34}}$ or $F_{32} = 30.5$ N

$T = F_{32} \times h = 30.5 \times 249 = 7595$ N.mm

(h = 249 mm, on measurement)

The input torque has to be equal and opposite to the couple obtained by parallel forces i.e.,

T = <u>7.595 N.m</u> (counter clockwise)

Example 12.6 *For the mechanism shown in Fig. 12.11a, determine the torque on the link AB for the static equilibrium of the mechanism.*

Solution

(i) Composite Graphical Solution As the mechanism is in static equilibrium, each of its members must also be in equilibrium individually.

- Member 4 is acted upon by three forces $\mathbf{F_1}$, $\mathbf{F}_{34}$ and $\mathbf{F}_{14}$ [Fig. 12.11(b)].
- Member 3 is acted upon by three forces $\mathbf{F_2}$, $\mathbf{F}_{23}$ and $\mathbf{F}_{43}$.
- Member 2 is acted upon by two forces $\mathbf{F}_{32}$ and $\mathbf{F}_{12}$ and a torque **T**.

To solve the problem graphically, proceed as follows:

- Force $\mathbf{F_1}$ on the member 4 is known completely. To know the other two forces acting on this member completely, the direction of one more force must be known. However, as the link 3 now is a three-force member, it is not possible to know the direction of the force $\mathbf{F}_{34}$ from that also.

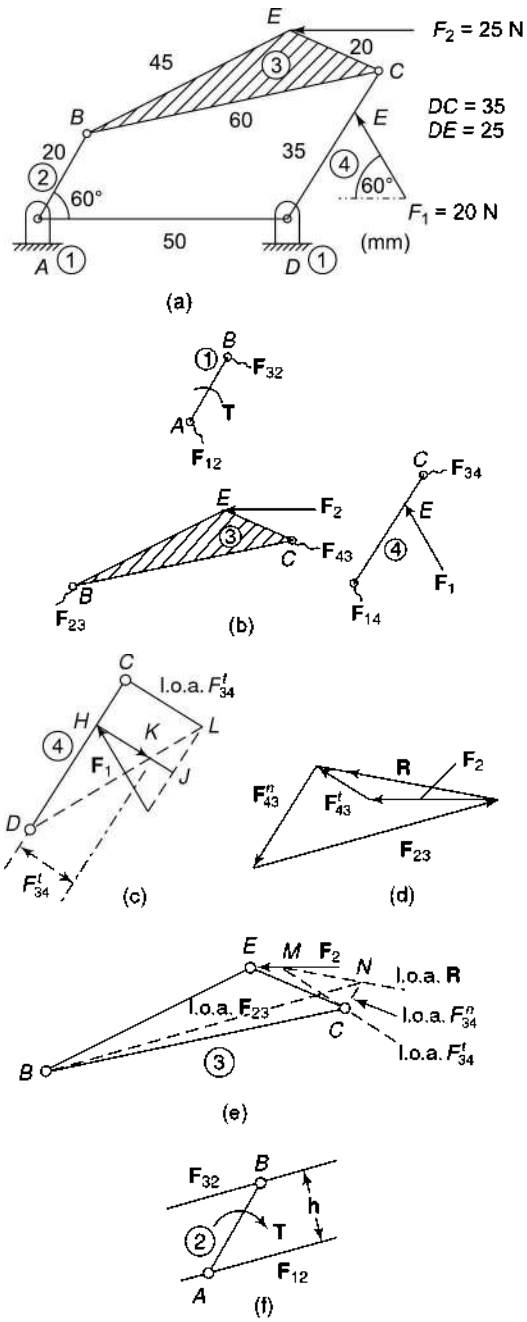

Fig. 12.11

- Consider two components, normal $\mathbf{F}_{34}^{n}$ and tangential $\mathbf{F}_{34}^{t}$ of the force $\mathbf{F}_{34}$. Assume $\mathbf{F}_{34}^{n}$ to be along DC and $\mathbf{F}_{34}^{t}$ perpendicular to DC through C. Also, take the components of force $\mathbf{F}_1$, i.e., $\mathbf{F}_1^n$ and $\mathbf{F}_1^t$ along the same directions.
- Now as the link 4 is in equilibrium, no moments are acting on it. Taking moments of all the forces acting on it about pivot point D.

  $M = \mathbf{F}_{34}^{t} \times DC + \mathbf{F}_1^t \times DE = 0$

  (No moments are to be there due to forces $\mathbf{F}_{34}^{n}$, $\mathbf{F}_1^n$ and $\mathbf{F}_{14}$ as these forces pass through the point D)

  or $\mathbf{F}_{34}^{t} = -\mathbf{F}_1^t \times \dfrac{DE}{DC}$

  Graphically, the above value of $\mathbf{F}_{34}^{t}$ can be obtained by taking $\mathbf{F}_1$ on the link 4 to some convenient scale and then taking two components of it, the normal component along DC and the tangential component perpendicular to DC being shown by JH in Fig. 12.11(c). Also, draw $CL \perp DC$. Draw JL parallel to HC. Join DL which intersects JH at K. Now, KH is the component $\mathbf{F}_{34}^{t}$ the direction being towards K.
- Now consider the equilibrium of the link 3. The forces acting on it are $\mathbf{F}_2$, $\mathbf{F}_{23}$ and $\mathbf{F}_{43}^{t}$ and $\mathbf{F}_{43}^{n}$. The latter two components are equal and opposite to $\mathbf{F}_{34}^{t}$ and $\mathbf{F}_{34}^{n}$ respectively.
- Find the resultant of $\mathbf{F}_2$ and $\mathbf{F}_{43}^{t}$ by drawing the force diagram as shown in [Fig. 12.9(d)].
- Draw a line $CM \perp DC$ and through C to represent the line of action of force $\mathbf{F}_{43}^{t}$ on the link 3 [Fig. 12.11(d)]. It intersects the line of action of the force $\mathbf{F}_2$ at M. Now the resultant of $\mathbf{F}_2$ and $\mathbf{F}_{43}^{t}$ must pass through M. Thus, draw a line parallel to $\mathbf{R}$ through M.

  Now the link 3 is reduced to a three-force member [Fig. 12.11(e)], the forces being: $\mathbf{R}$, $\mathbf{F}_{43}^{n}$ and $\mathbf{F}_{23}$.

  As these are to be concurrent forces, $\mathbf{F}_{23}$ must pass through the intersection of lines of forces $\mathbf{F}_{43}^{n}$ and $\mathbf{R}$. Draw a line parallel to DC and through C to represent the line of action of force $\mathbf{F}_{43}^{n}$. This intersects the line of action of $\mathbf{R}$ at N. Join BN. Now BN represents the line of action of force $\mathbf{F}_{23}$.

- Complete the force diagram and find the magnitude of $\mathbf{F_{23}}$ and $\mathbf{F_{43}^{n}}$.
- Draw line parallel to line *BN* through *B* on link 2 [Fig. 12.11(f)] to represent the line of action of force $\mathbf{F_{32}}$ and a parallel line through *A* to represent the line of action of force $\mathbf{F_{12}}$.

From force diagram,

$$F_{23} = 49.4 \text{ N}$$

Now, $F_{32} = -F_{23} = -49.4$

Member 2 will be in equilibrium if $\mathbf{F}_{12}$ is equal, parallel and opposite to $\mathbf{F}_{32}$ and

$T = -F_{32} \times h = -49.8 \times 14.3 = -706.4$ N.mm

The input torque has to be equal and opposite to this couple, i.e.,

$T = 706.4$ N.mm (clockwise)

(ii) Graphical Solution by Superposition method

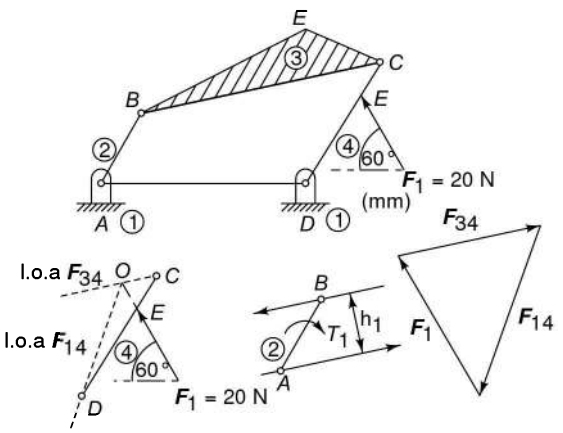

Fig. 12.12

Subproblem a (Fig. 12.12) Neglecting force $\mathbf{F}_2$

Link 4 is a three-force member in which only one force $\mathbf{F}_1$ is known. However, the line of action of $\mathbf{F}_{34}$ can be obtained from the equilibrium of the link 3 which is a two-force member and is acted upon by forces $\mathbf{F}_{23}$ and $\mathbf{F}_{43}$. Thus, lines of action of forces $\mathbf{F}_{43}$ or $\mathbf{F}_{34}$ are along *BC*. If $\mathbf{F}_1$ and $\mathbf{F}_{34}$ intersect at *O* then line of action of $\mathbf{F}_{14}$ will be along *OD* since the three forces are to be concurrent. Draw the force triangle ($\mathbf{F}_1$ is completely known) and obtain the magnitudes of forces $\mathbf{F}_{34}$ and $\mathbf{F}_{14}$.

$$F_{34} = 17.6 \text{ N}$$

Also, $F_{34} = -F_{43} = F_{23} = -F_{32} = -17.6$ N

So, the direction of F_{32} is opposite to that of F_{23}.

Link 2 is subjected to two forces and a torque $\mathbf{T}_1$.

For equilibrium, $\mathbf{F}_{12}$ is equal, parallel and opposite to $\mathbf{F}_{32}$.

$T_1 = F_{32} \times h_1 = 17.6 \times 14.9 = 262$ N.mm clockwise

Subproblem b (Fig. 12.13) Neglecting force $\mathbf{F}_1$.

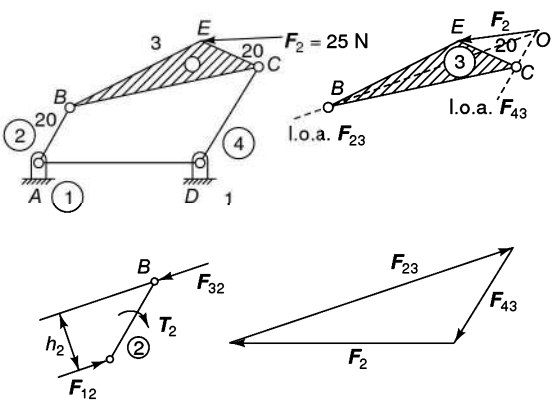

Fig. 12.13

Link 4 is a two-force member. The two forces $\mathbf{F}_{14}$ and $\mathbf{F}_{34}$ are to be equal and opposite and their line of action is to be the same which shows that the line of action is along *DC*. Thus, the line of action of $\mathbf{F}_{43}$ is also along *DC*.

Link 3 is a three-force member in which $\mathbf{F}_2$ is completely known, only the direction of $\mathbf{F}_{43}$ is known (parallel to *DC*) and $\mathbf{F}_{23}$ is completely unknown. If the line of action of $\mathbf{F}_2$ and $\mathbf{F}_{43}$ meet at *O*, the line of action of $\mathbf{F}_{23}$ will be along *OB* as the three forces are to be concurrent. Draw the force triangle ($\mathbf{F}_2$ is completely known) by taking $\mathbf{F}_2$ to a suitable scale and two lines parallel to lines of action of $\mathbf{F}_{23}$ and $\mathbf{F}_{43}$. Mark arrowheads on $\mathbf{F}_{23}$ and $\mathbf{F}_{43}$ to know the directions.

$$F_{23} = 33.2 \text{ N}$$

and $F_{23} = -F_{32} = -33.2$ N

So, direction of F_{32} is opposite to that of F_{23}.

Link 2 is subjected to two forces and a torque $\mathbf{T}_2$.

For equilibrium, $\mathbf{F}_{12}$ is equal, parallel and opposite to $\mathbf{F}_{32}$.

$T_2 = F_{32} \times h_2 = 33.2 \times 13.2 = 438$ N.mm lockwise

Total torque = 262 + 438 = 700 N.mm

Example 12.7 *For the static equilibrium of the mechanism of [Fig. 12.14(a)], find the torque to be applied on link AB.*

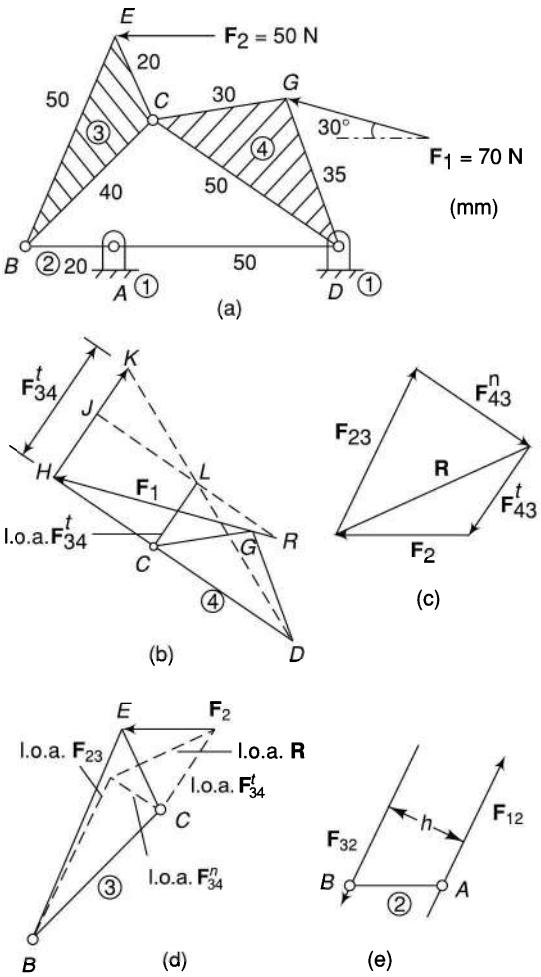

Fig. 12.14

Solution The point of action of force $\mathbf{F}_1$ on the link 4 is an offset point G. If DC is extended and let the line of action of force $\mathbf{F}_1$ meet at H then the force $\mathbf{F}_1$ may be considered to be acting on a virtual point H on the link DC as the magnitude of force as well as the magnitude couple effect is not going to vary.

Now, the problem can be solved by adopting the procedure given in the previous example. In brief:

- Take vector RH to represent force $\mathbf{F}_1$ to some scale.
- Find force $\mathbf{F}_{34}^{t}$. Its magnitude is given by HK and it acts through C.
- Find the resultant of $\mathbf{F}_2$ and $\mathbf{F}_{43}^{t}$ and its point of application in the free body diagram.
- Through point C, draw line for the vector $\mathbf{F}_{43}^{n}$ and then find the line of application of $\mathbf{F}_{23}$.

  From force diagram,

  $$F_{23} = 68.9 \text{ N}$$

  Now, $F_{32} = -F_{23} = -49.4$

  Member 2 will be in equilibrium if $\mathbf{F}_{12}$ is equal, parallel and opposite to $\mathbf{F}_{32}$ and

  $T = -F_{32} \times h = -68.9 \times 18.65 = -1285$ N.mm

  The input torque has to be equal and opposite to this couple, i.e.,

  $T = 1.285$ N.m (clockwise)
- The example can also be worked out by the graphical method using the principle of superposition.

Example 12.8 *For the static equilibrium of the quick-return mechanism shown in Fig. 12.15a, determine the input torque T_2 to be applied on the link AB for a force of 300 N on the slider D. The dimensions of the various links are*

OA = 400 mm, AB = 200 mm, OC = 800 mm, CD = 300 mm

Solution The slider at D or the link 6 is a three-force member. Lines of action of the forces are [Fig.12.15(b)]

- $\mathbf{F}$, 300 N as given
- $\mathbf{F}_{56}$ along CD, as link 5 is a two force member
- $\mathbf{F}_{16}$, normal reaction, perpendicular to slider motion

  Draw the force diagram and determine the direction sense of forces $\mathbf{F}_{56}$ and $\mathbf{F}_{16}$. From the force $\mathbf{F}_{56}$, the directions of forces $\mathbf{F}_{65}$, $\mathbf{F}_{35}$ and $\mathbf{F}_{53}$ are known. Now, the link 3 is a three-force member. Lines of action of the forces are
- $\mathbf{F}_{53}$, known completely through C

- $\mathbf{F}_{43}$, perpendicular to slider motion through B
- $\mathbf{F}_{13}$, unknown through A.

  As the lines of action of forces acting through B and C are known, the line of action of $\mathbf{F}_{13}$ through A must also pass through the point of intersection of the other two forces. Find the sense of the direction of force $\mathbf{F}_{43}$ by drawing the force triangle.

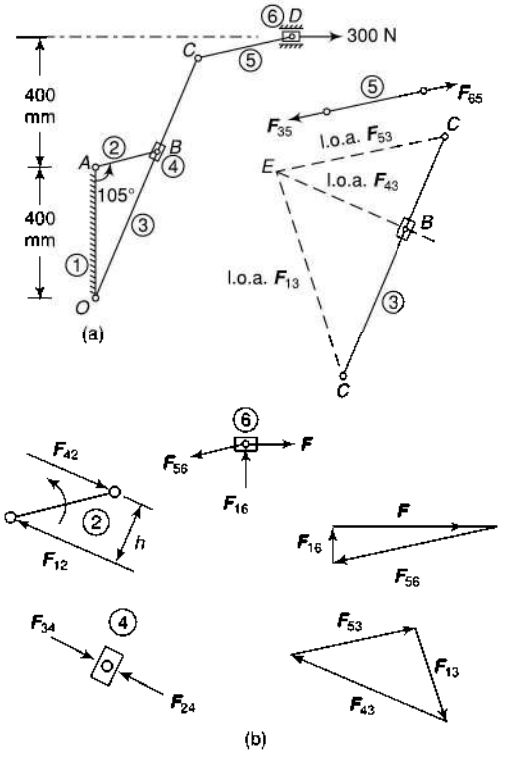

Fig. 12.15

Considering the equilibrium of the slider 4, the direction of $\mathbf{F}_{24}$ is known which is equal and opposite to $\mathbf{F}_{34}$. Considering the equilibrium of the link 2, the lines of action of $\mathbf{F}_{42}$ and $\mathbf{F}_{12}$ are drawn and the perpendicular distance between them is measured.

Then, torque on the link 2,

$T_2 = F_{42} \times h = 403 \times 120 = 48\ 360$ N counter-clockwise

Example 12.9 *A four-link mechanism is subjected to the following external forces (Fig. 12.16 & Table 12.1): Determine the shaft torque T_2 on the input link AB for static equilibrium of the mechanism. Also find the forces on the bearings A, B, C and D.*

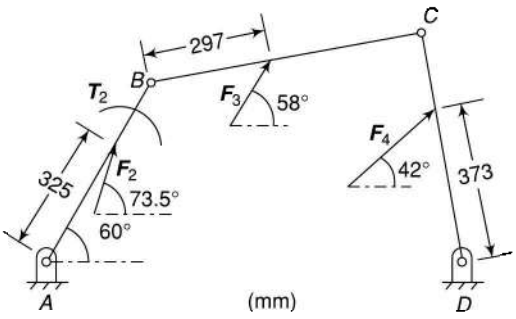

Fig. 12.16

Solution

The solution of the stated problem is worked out by

(i) graphical solution by using theorem of superposition, i.e., dividing the problem into subproblems by considering only one force on a member and ignoring the other forces on other members

(ii) a composite graphical solution

(iii) analytical solution

(i) Graphical Method by Superposition

Subproblem a (Fig. 12.17) Neglecting forces $\mathbf{F}_3$ and $\mathbf{F}_4$.

Table 12.1

Link	*Length*	*Force*	*Magnitude*	*Point of application force (r)*
AB (2)	500 mm	$\mathbf{F}_2$	80 ∠ 73.5°N	325 mm from *A*
AB (3)	660 mm	$\mathbf{F}_3$	144 ∠ 58°N	297 mm from B
AB (4)	560 mm	$\mathbf{F}_4$	60 ∠ 42°N	373 mm from *D*
AB (1)	1000 mm	-	(Fixed link)	

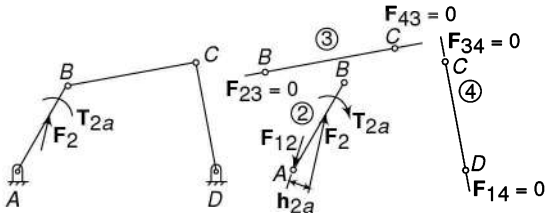

Fig. 12.17

Links 3 and 4 are both two-force members. Therefore, $\mathbf{F}_{43}$ can be along *BC* and $\mathbf{F}_{43}$, along *DC*. As $\mathbf{F}_{43}$ is to be equal and opposite of $\mathbf{F}_{34,}$ both must be zero.

Also $F_{43} = F_{23} = F_{32} = 0$

Hence, the link 2 is in equilibrium under the action of two forces $\mathbf{F}_2$ and $\mathbf{F}_{12}$ ($F_{12} = F_2$) and torque $\mathbf{T}_{2a}$.

$T_{2a} = F_2 \times h_{2a} = 80 \times 0.325 \sin 13.5° = 6$ N.m clockwise

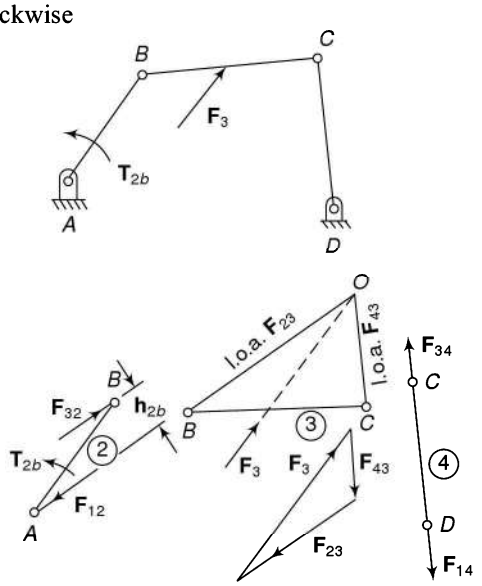

Fig. 12.18

Subproblem b (Fig. 12.18) Neglecting forces $\mathbf{F}_2$ and $\mathbf{F}_4$.

Link 4 is a two-force member.

$\therefore$ $\mathbf{F}_{34} = \mathbf{F}_{14,}$ magnitudes unknown, directions parallel to *DC*

Link 3 is a three-force member in which $\mathbf{F}_3$ is completely known, only the direction of $\mathbf{F}_{43}$ is know (parallel to *DC*) and $\mathbf{F}_{23}$ is completely unknown. If the line of action of $\mathbf{F}_3$ and $\mathbf{F}_{43}$ meet at *O*, the line of action of $\mathbf{F}_{23}$ will be along *OB*. Draw the force triangle ($\mathbf{F}_3$ is completely known) by taking $\mathbf{F}_3$ to a suitable scale and two lines parallel to lines of action of $\mathbf{F}_{23}$ and $\mathbf{F}_{43.}$ Mark arrowheads on $\mathbf{F}_{23}$ and $\mathbf{F}_{43}$ to know the directions.

$F_{43} = 50$ N

Also, $F_{43} = F_{34} = F_{14} = 50$ N

$F_{23} = 113$ N

and $F_{23} = F_{32} = 113$ N

Link 2 is subjected to two forces and a torque $\mathbf{T}_{2b.}$

For equilibrium, $\mathbf{F}_{12}$ is equal, parallel and opposite to $\mathbf{F}_{32.}$

$T_{2b} = F_{32} \times h_{2b} = 113 \times 0.16 = 18.1$ N.m counter-clockwise.

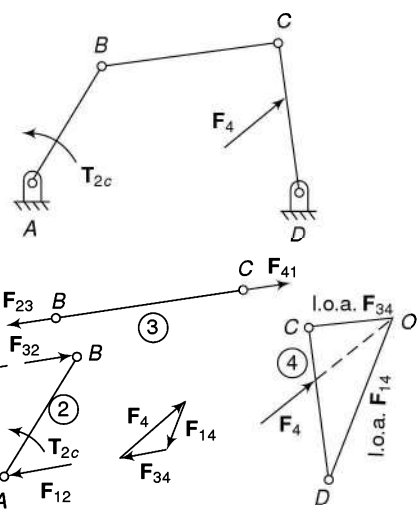

Fig. 12.19

Subproblem c (Fig. 12.19) Neglecting forces $\mathbf{F}_2$ and $\mathbf{F}_3$.

Link 4 is a three-force member in which only one force $\mathbf{F}_4$ is known. However, the line of action of $\mathbf{F}_{34}$ can be obtained from the equilibrium of the link 3 which is a two-force member. $\mathbf{F}_{34}$ will be equal and opposite to $\mathbf{F}_{43}$ which is along *BC*. If $\mathbf{F}_4$ and $\mathbf{F}_{34}$ intersect at *O* then the line of action of $\mathbf{F}_{14}$ will be

along OD. Draw the force triangle ($\mathbf{F}_4$ is completely known) and obtain the magnitudes of forces $\mathbf{F}_{34}$ and $\mathbf{F}_{14}$.

$$F_{14} = 34.8 \text{ N}$$

Also, $F_{34} = F_{43} = F_{23} = F_{32} = 34$ N

Link 2 is subjected to two forces and a torque $\mathbf{T}_{2c}$.

For equilibrium,

$\mathbf{F}_{12} = \mathbf{F}_{32}$.

$T_{2c} = F_{32} \times h_{2c} = 34 \times 0.38 = 12.9$ N.m counter-clockwise.

Net crankshaft torque $= T_{2a} + T_{2b} + T_{2c}$

$= -6 + 18.1 + 12.9$

$= 25$ N.m counter-clockwise

To find the magnitudes of forces on the bearings, the results obtained in a, b and c have to be added vectorially as shown in Fig. 12.20.

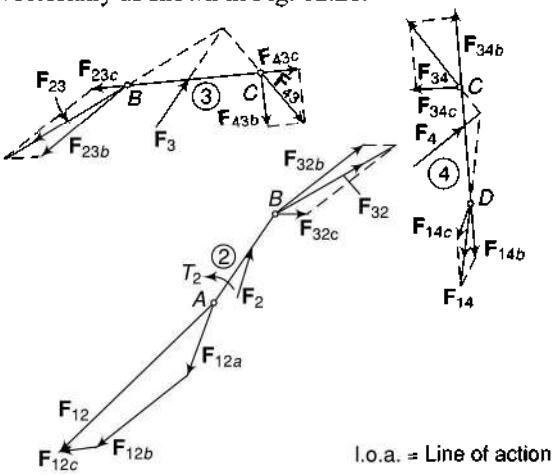

Fig. 12.20

$$F_{14} = 80 \text{ N}$$

$$F_{34} = F_{43} = 60 \text{ N}$$

$$F_{23} = F_{32} = 137 \text{ N}$$

$$F_{12} = 204 \text{ N}$$

(ii) Composite graphical solution

The problem can be solved by following the same procure as in examples 12.6 and 12.7. The solution is worked out in Fig. 12.21 which is self-explanatory. After obtaining the force $\mathbf{F}_{32}$, the resultant R' of this force with the force $\mathbf{F}_2$ can be obtained by drawing a force diagram. This resultant passes through the intersection of the lines of action of $\mathbf{F}_2$ and $\mathbf{F}_{23}$.

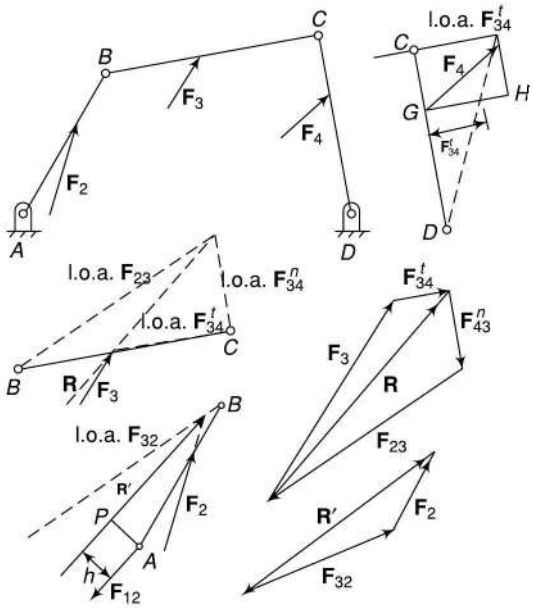

Fig. 12.21

$T = \mathbf{R}' \times h = \mathbf{F}_{12} \times h$

$= 208.8 \times 117 = 24\,430$ N.mm or <u>24.43 N.m</u>

(iii) Analytical Method

First of all, determine the angular inclinations of the links BC and DC, i.e., angles β and ϕ. This may be done by drawing the configuration or by analytical means (section 4.2). Angles β and ϕ are found to be 10.3° and 100.4° (Fig. 12.22) respectively using analytical means.

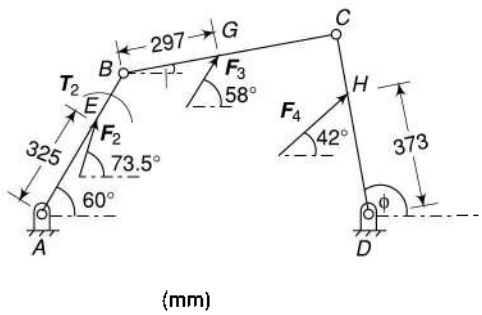

Fig. 12.22

Position vectors $\mathbf{AB} = 0.5\angle 60^\circ = 0.25\mathbf{i} + 0.433\mathbf{j}$

$\mathbf{BC} = 0.66\angle 10.3^\circ = 0.649\,\mathbf{i} + 0.118\,\mathbf{j}$

$\mathbf{DC} = 0.56\angle 100.4^\circ = -0.101\,\mathbf{i} + 0.551\,\mathbf{j}$

$\mathbf{AE} = 0.325\angle 60^\circ = 0.163\,\mathbf{i} + 0.281\,\mathbf{j}$

$\mathbf{BG} = 0.297\angle 10.3^\circ = 0.292\,\mathbf{i} + 0.053\,\mathbf{j}$

$\mathbf{DH} = 0.373\angle 100.4^\circ = -0.0673\mathbf{i} + 0.367\mathbf{j}$

Force vectors $\mathbf{F_2} = 80\angle 73.5^\circ = 22.72\,\mathbf{i} + 76.7\,\mathbf{j}$

$\mathbf{F_3} = 144\angle 58^\circ = 76.31\,\mathbf{i} + 122.1\,\mathbf{j}$

$\mathbf{F_4} = 60\angle 42^\circ = 44.59\,\mathbf{i} + 40.15\,\mathbf{j}$

Subproblem a

$$\mathbf{F_{14}} = -\mathbf{F_2} = -80\angle 73.5^\circ = 80\angle 253.5^\circ = -22.72\,\mathbf{i} - 76.7\,\mathbf{j}$$

$$T_{2a} = \mathbf{F_2} \times \mathbf{AE} = (22.72\,\mathbf{i} + 76.7\,\mathbf{j}) \times (0.163\,\mathbf{i} + 0.281\,\mathbf{j})$$

$$= \begin{vmatrix} \mathbf{i} & \mathbf{j} & \mathbf{k} \\ 22.72 & 76.7 & 0 \\ 0.163 & 0.281 & 0 \end{vmatrix}$$

$$= 22.72 \times 0.281 - 76.7 \times 0.163 = -6.12 \text{ N.m}$$

Subproblem b As the link *BC* is in static equilibrium, the resultant forces and moments acting on it are zero.

Taking moments of the forces about point *B*,

$$M_b = \mathbf{F_3} \times \mathbf{BG} + \mathbf{F_{43}} \times \mathbf{BC} = \mathbf{0} \qquad \text{(i)}$$

As the direction of $\mathbf{F_{43}}$ is along *DC* if force $\mathbf{F_4}$ is ignored,

$\therefore\ \mathbf{F_{43}} = F_{43}\angle 100.4^\circ = -0.181\,F_{43}\,\mathbf{i} + 0.983\,F_{43}\mathbf{j}$

Inserting the values of vectors in (i),

$$(76.31\,\mathbf{i} + 122.1\mathbf{j}) \times (0.292\,\mathbf{i} + 0.053\mathbf{j}) + (-0.181F_{43}\mathbf{i} + 0.983F_{43}\mathbf{j}) \times (0.649\mathbf{i} + 0.118\mathbf{j}) = 0$$

$$\begin{vmatrix} \mathbf{i} & \mathbf{j} & \mathbf{k} \\ 76.3 & 122.1 & 0 \\ 0.292 & 0.053 & 0 \end{vmatrix} + \begin{vmatrix} \mathbf{i} & \mathbf{j} & \mathbf{k} \\ -0.181F_{43} & 0.983F_{43} & 0 \\ 0.649 & 0.118 & 0 \end{vmatrix} = 0$$

$-31.61 - 0.659\,F_{43} = 0$

$F_{43} = -48$

Thus

$\mathbf{F_{43}} = -48\angle 100.4^\circ = 48\angle 280.4^\circ = 8.66\,\mathbf{i} - 47.1\mathbf{j}$

$\mathbf{F_{14}} = -\mathbf{F_{34}} = \mathbf{F_{43}} = 48\angle 280.4^\circ = 8.66\,\mathbf{i} - 47.1\mathbf{j}$

Similarly, the net force on the link 3,

$\mathbf{F_{23}} + \mathbf{F_3} + \mathbf{F_{43}} = 0$

or $\mathbf{F_{23}} + (76.31\,\mathbf{i} + 122.1\mathbf{j}) + (8.66\,\mathbf{i} - 47.1\mathbf{j}) = 0$

or $\mathbf{F_{23}} + 84.97\,\mathbf{i} + 75\mathbf{j} = 0$

or $\mathbf{F_{23}} = -84.97\,\mathbf{i} - 75\mathbf{j}$ or $113.3\angle 221.4^\circ$

or $\mathbf{F_{32}} = 113.3\angle 41.4^\circ = 84.97\,\mathbf{i} + 75\mathbf{j}$

$\mathbf{F_{12}} = -\mathbf{F_{32}} = -84.97\,\mathbf{i} - 75\,\mathbf{j}$

$T_{2b} = \mathbf{F_{32}} \times AB\angle 60^\circ = (84.97\,\mathbf{i} + 75\,\mathbf{j}) \times (0.25\,\mathbf{i} + 0.433\,\mathbf{j})$

$= 18$ N.m

Subproblem c As the link *DC* is in static equilibrium, no forces and no moments are acting on it. Taking moments of the forces about point *D*,

$$M_d = \mathbf{F_4} \times \mathbf{DH} + \mathbf{F_{34}} \times \mathbf{DC} = \mathbf{0} \qquad \text{(ii)}$$

As the direction of $\mathbf{F_{34}}$ is along *BC* if the force $\mathbf{F_3}$ is ignored,

$\therefore\ \mathbf{F_{34}} = F_{34}\angle 10.3^\circ = 0.984\,F_{34}\,\mathbf{i} + 0.179\,F_{34}\,\mathbf{j}$

Inserting the values of vectors in (ii),

$$(44.59\,\mathbf{i} + 40.15\,\mathbf{j}) \times (-0.0673\,\mathbf{i} + 0.367\,\mathbf{j}) + (0.984F_{34}\mathbf{i} + 0.179F_{34}\mathbf{j}) \times (-0.101\,\mathbf{i} + 0.551\,\mathbf{j}) = 0$$

or

$$\begin{vmatrix} \mathbf{i} & \mathbf{j} & \mathbf{k} \\ 44.59 & 40.15 & 0 \\ -0.0673 & 0.367 & 0 \end{vmatrix} + \begin{vmatrix} \mathbf{i} & \mathbf{j} & \mathbf{k} \\ 0.984F_{43} & 0.179F_{43} & 0 \\ -0.101 & 0.551 & 0 \end{vmatrix} = 0$$

or $19.067 + 0.56\,F_{34} = 0$

$F_{34} = -34$

Thus

$\mathbf{F_{34}} = -34\angle 10.3^\circ = 34\angle 190.3^\circ = -33.45\,\mathbf{i} - 6.08\mathbf{j}$

Net force on the link 4,

$\mathbf{F_{34}} + \mathbf{F_4} + \mathbf{F_{14}} = 0$

or $(-33.45\,\mathbf{i} - 6.08\,\mathbf{j}) + (44.59\,\mathbf{i} + 40.15\,\mathbf{j}) + \mathbf{F_{14}} = 0$

or $11.14\,\mathbf{i} + 34.07\,\mathbf{j} + \mathbf{F_{14}} = 0$

or $\mathbf{F_{14}} = -11.14\,\mathbf{i} - 34.07\mathbf{j}$ or $35.8\angle 251.9^\circ$

Now, $\mathbf{F_{32}} = -\mathbf{F_{23}} = \mathbf{F_{43}} = -\mathbf{F_{34}} = 33.45\,\mathbf{i} + 6.08\mathbf{j}$

$\mathbf{F_{12}} = -\mathbf{F_{32}} = -33.45\,\mathbf{i} - 6.08\,\mathbf{j}$

$T_{2c} = \mathbf{F_{32}} \times AB\angle 60^\circ = (33.45\,\mathbf{i} + 6.08\,\mathbf{j}) \times (0.25\,\mathbf{i} + 0.433\,\mathbf{j})$

$= 12.96$ N.m

Net crankshaft torque $= T_{2a} + T_{2b} + T_{2c}$

$= -6.12 + 18 + 12.96$

$=$ <u>24.84 N.m</u> counter-clockwise

Forces on the bearings

On *D*, $\mathbf{F_{14}} = (8.66\,\mathbf{i} - 47.1\,\mathbf{j}) + (-11.14\,\mathbf{i} - 34.07\,\mathbf{j})$

$= -2.48\,\mathbf{i} - 81.17\,\mathbf{j}$

$= 81.2\angle 268.2^\circ$N

or it can be stated as $\mathbf{F_{41}} = 81.2\angle 88.2^\circ$N

On *C*, $\mathbf{F_{43}} = (8.66\,\mathbf{i} - 47.1\,\mathbf{j}) + (33.45\,\mathbf{i} + 6.08\,\mathbf{j})$

$= 41.45\,\mathbf{i} - 41.02\,\mathbf{j}$

$= 58.8\angle 315.8^\circ$N

On B, $\mathbf{F}_{23} = (-84.97\,\mathbf{i} - 75\,\mathbf{j}) + (-33.45\,\mathbf{i} - 6.08\,\mathbf{j})$

$= 118.42\,\mathbf{i} - 81.08\,\mathbf{j}$

$= 143.5\,\angle 214.4^{\circ}\text{N}$

On A, $\mathbf{F}_{12} = (-22.72\,\mathbf{i} - 76.7\,\mathbf{j}) + (-84.97\,\mathbf{i} - 75\,\mathbf{j})$

$+ (-33.45\,\mathbf{i} - 6.08\,\mathbf{j})$

$= -141.14\,\mathbf{i} - 157.78\,\mathbf{j}$

$= 211.7\angle 228.2^{\circ}\text{N}$

Example 12.10 *In a four-link mechanism shown in Fig. 12.23(a), torque $\boldsymbol{T}_3$ and $\boldsymbol{T}_4$ have magnitudes of 30 N.m and 20 N.m respectively. The link lengths are AD = 800 mm, AB = 300 mm, BC = 700 mm and CD = 400 mm. For the static equilibrium of the mechanism, determine the required input torque $\boldsymbol{T}_2$.*

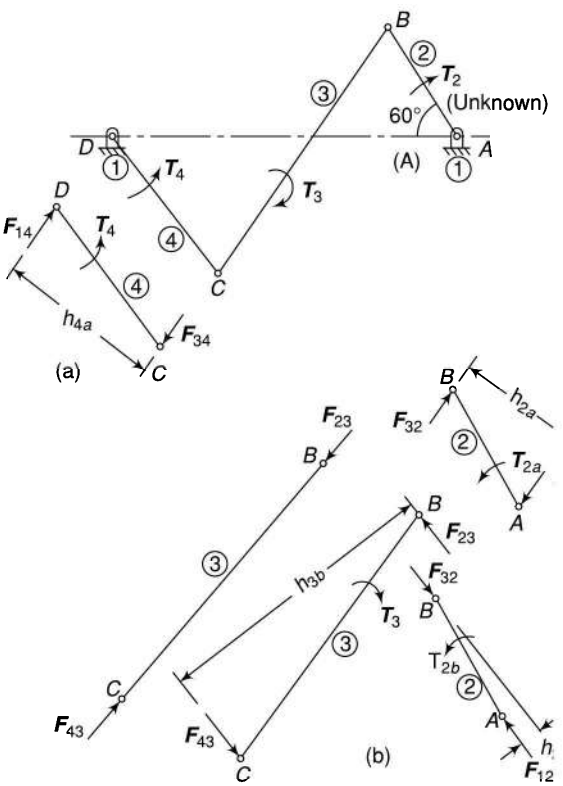

Fig. 12.23

Solution The solution of the stated problem can be obtained by superposition of the solutions of subproblems *a* and *b*.

Subproblem a [Fig. 12.23(a)] Neglecting torque $\mathbf{T}_3$

Torque $\mathbf{T}_4$ on the link 4 is balanced by a couple having two equal, parallel and opposite forces at C and D. As the link 3 is a two-force member, $\mathbf{F}_{43}$ and therefore, $\mathbf{F}_{34}$ and $\mathbf{F}_{14}$ will be parallel to BC.

$$F_{34} = F_{14} = \frac{T_4}{h_{4a}} = \frac{20}{0.383} = 52.2 \text{ N}$$

and $F_{34} = F_{43} = F_{23} = F_{32} = F_{12} = 52.2$ N

$T_{2a} = F_{32} \times h_{2a} = 52.2 \times 0.274 = 14.3$ N.m counter-clockwise.

Subproblem b [Fig. 12.23(b)] Neglecting torque $\mathbf{T}_4$.

$\mathbf{F}_{43}$ is along CD. The diagram is self-explanatory.

$$F_{43} = F_{23} = \frac{T_3}{h_{3b}} = \frac{30}{0.67} = 44.8 \text{ N}$$

$F_{23} = F_{32} = F_{12} = 44.8$ N

$T_{2b} = F_{32} \times h_{2b} = 44.8 \times 0.042 = 1.88$ N.m

counter-clockwise.

$T_2 = T_{2a} + T_{2b} = 14.3 + 1.88 = \underline{16.18 \text{ N}}$

counter-clockwise

Example 12.11 *Figure 12.24 shows a schematic diagram of an eight-link mechanism. The link lengths are*

AB = 450 mm	*OF = FC = 250 mm*
AC = 300 mm	*CG = 150 mm*
BD = 400 mm	*HG = 600 mm*
BE = 200 mm	*QH = 300 mm*

Determine the required shaft torque on the link 8 for static equilibrium against an applied load of 400 N on the link 3.

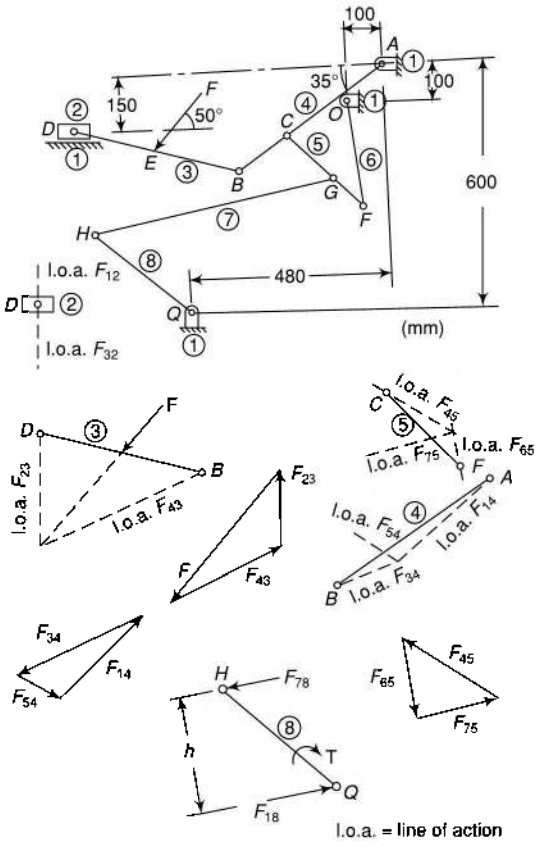

Fig. 12.24

Solution Links 2, 6 and 7 are two-force members. Since their lines of action can easily be visualised, it is not necessary to draw their free-body diagrams. Links 3, 4 and 5 are three-force members and 8 is a member with two forces and a torque.

Slider 2 is a two-force member. If friction is neglected, the forces on it $\mathbf{F}_{12}$ and $\mathbf{F}_{32}$ must act perpendicular to the guide path.

Considering the link 3, concurrency point can be found from the lines of action of $\mathbf{F}_{23}$ and $\mathbf{F}$, and thus the line of action of $\mathbf{F}_{43}$ is established.

The equilibrium of the link 4 cannot be considered at this stage as the line of action of only one force $\mathbf{F}_{34}$ is known (from $\mathbf{F}_{43}$).

Taking the link 5 which is a three-force member, the line of action of force at F is along OF and of force at G along HG. Establishing the point of concurrency from these two forces, the line of action of force at C, i.e., of the force $\mathbf{F}_{45}$ is known.

Now, take the link 4 and determine the line of action of the force at A since the lines of action of forces at B and C are known.

Force $\mathbf{F}_{78}$ is along HG and an equal, parallel and opposite force $\mathbf{F}_{18}$ also acts on the link 8.

Now, the lines of action of all the forces are known. To determine the torque on the link 8, proceed as follows:

Construct a force diagram for the forces on the link 3 ($\mathbf{F}$ is completely known) and find $\mathbf{F}_{43}$ (thus $\mathbf{F}_{34}$ is known).

Draw a force diagram for the forces on the member 4 ($\mathbf{F}_{34}$ is complete known) and find $\mathbf{F}_{54}$ (thus $\mathbf{F}_{45}$ is known).

Draw a force diagram for the forces on the member 5 ($\mathbf{F}_{45}$ is complete known) and find $\mathbf{F}_{75}$ (thus $\mathbf{F}_{57}$ is known).

Now $F_{57} = F_{87} = F_{78} = F_{18}$

$F_8 = F_{78} \times h = 75 \times 240 = \underline{18\ 000\ \text{N.mm}}$

or $\underline{18\ \text{N.m}}$ clockwise

12.9 PRINCIPLE OF VIRTUAL WORK

The principle of virtual (imaginary) work can be stated as 'the work done during a virtual displacement from the equilibrium is equal to zero'. Virtual displacement may be defined as an imaginary infinitesimal displacement of the system. By applying this principle, an entire mechanism is examined as a whole and there is no need of dividing it into free bodies.

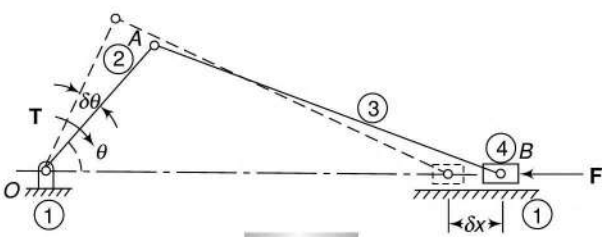

Fig. 12.25

Consider a slider-crank mechanism shown in Fig. 12.25. It is acted upon by the external piston force **F**, the external crankshaft torque **T** and the force at the bearings. As the crank rotates through a small angular displacement $\delta\theta$, the corresponding displacement of the piston is δx. the various forces acting on the system are

- Bearing reaction at O (performs no work)
- Force of cylinder on piston, perpendicular to piston displacement (produces no work)
- Bearing forces at A and B, being equal and opposite (AB is a two-force member), no work is done
- Work done by torque $T = T\delta\theta$
- Work done by force $F = F\ \delta x$

Work done is positive if a force acts in the direction of the displacement and negative if it acts in the opposite direction.

According to the principle of virtual work,

$$W = T\ \delta\theta + F\ \delta x = 0 \tag{12.7}$$

As virtual displacement must take place during the same interval $\delta\, t$,

$$\therefore \qquad T\frac{d\theta}{dt} + F\frac{dx}{dt} = 0$$

or

$$T\omega + Fv = 0 \tag{12.8}$$

where ω is the angular velocity of the crank and v, the linear velocity of the piston.

$$T = -\frac{F}{\omega}v$$

The negative sign indicates that for equilibrium, **T** must be applied in the opposite direction to the angular displacement.

Example 12.12 *Solve Example 12.9 by using the principle of virtual work.*

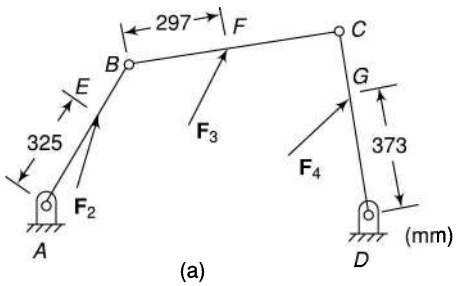

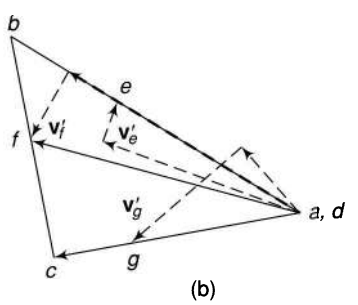

Fig. 12.26

Solution Assume that the line AB has an instantaneous angular velocity of ω rad/s counter-clockwise. Then $v_b = 0.5\ \omega$ m/s.

From the configuration diagram [Fig. 12.26(a)], draw the velocity diagram [Fig. 12.26(b)]. Locate the points E, F and G on the velocity diagram and locate the velocity vectors for the same. Take their components parallel and perpendicular to the direction of forces.

$v'_e = 0.0745$ rad/s (parallel to $\mathbf{F}_2$)

$v'_f = 0.124$ rad/s (parallel to $\mathbf{F}_3$)

$v'_g = 0.205$ rad/s (parallel to $\mathbf{F}_4$)

Assuming T to be counter-clockwise and applying the principle of virtual work,

$T \times \omega + F_2 \times 0.0745\omega - F_3 \times 0.124\omega - F_4 \times 0.205\omega = 0$

or $T + 80 \times 0.0745 - 144 \times 0.124 - 60 \times 0.205 = 0$

or $T = -6 + 17.3 + 12.3$

$= 23.5$ N.m counter-clockwise

12.10 FRICTION IN MECHANISMS

When two members of a mechanism move relative to each other, friction occurs at the joints. The presence of friction increases the energy requirements of a machine.

Friction at the bearing is taken into account by drawing friction circles and at the sliding pairs by considering the angle of friction (Refer sections 8.13 and 8.14).

Example 12.13 *In a four-link mechanism ABCD, AB = 350 mm, AD = 700 mm BC = 500 mm, DE = 150 mm CD = 400 mm, ∠DAB = 60° (AD is the fixed link)*

A force of 35 N (F_4) acts at E on link DC as shown in Fig. 12.27a. Determine the force on the link AB required at the midpoint in the direction shown in the diagram for the static equilibrium of the mechanism. The coefficient of friction is 0.4 for each revolving pair. Assume impending motion of AB to be counter-clockwise. The radius of each journal is 50 mm.

Also, find the torque on AB for its impending clockwise motion. (A very high value of coefficient of friction has been assumed to obtain a clear diagram).

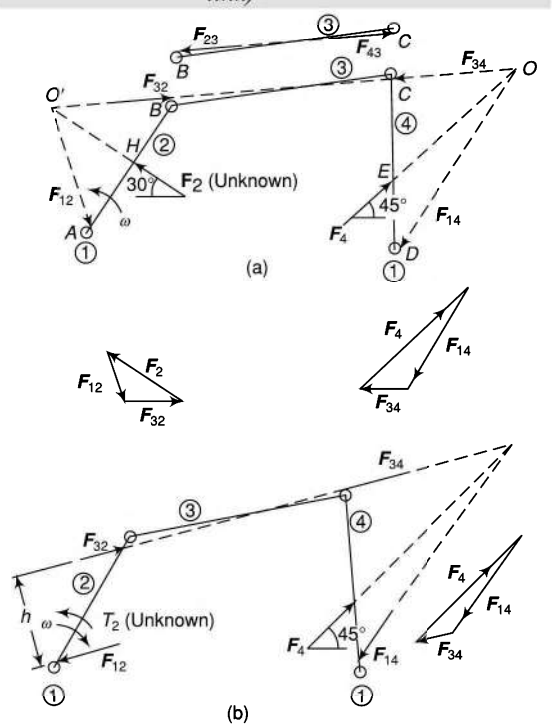

Fig. 12.27

Solution Radius of friction circle at each joint = μr = 0.4 × 50 = 20 mm.

For the counter-clockwise rotation of link AB, DC also rotates counter-clockwise; $\angle ABC$ is deceasing and $\angle BCD$ increasing.

Initially, neglect the friction at the journal bearings and find the directions of different forces by finding points of concurrency and drawing force triangles (not shown in the diagram).

Considering the link 3, at its end C, $\angle BCD$ is increasing and thus it rotates clockwise relative to the link 4. Therefore, $\mathbf{F}_{43}$ must form a counter-clockwise friction couple. At the end B, $\angle ABC$ is decreasing and thus rotates clockwise relative to the link 2. Therefore, $\mathbf{F}_{23}$ forms a counter-clockwise friction couple. The friction axis for the coupler BC is the common tangent to the two friction circles.

Now, consider the link 4. The line of action of the force $\mathbf{F}_{34}$ will be opposite to that of $\mathbf{F}_{43}$. Intersection of this line with the line of action of $\mathbf{F}_4$ gives the point of concurrency O for the forces acting on the link 4. As the link 4 rotates counter-clockwise, the tangent to the friction circle at D drawn from point O is such that a clockwise friction couple is obtained.

By drawing a force triangle for the forces acting on link 4 ($\mathbf{F}_4$ is completely known), $\mathbf{F}_{34}$ is obtained.

$$F_{34} = F_{43} = F_{23} = F_{32}$$

The point of concurrency for the forces acting on the link 2 is at O' which is the intersection of $\mathbf{F}_{32}$ and $\mathbf{F}_2$. As the link 1 rotates counter-clockwise, draw a tangent to the friction circle at A from O' such that a clockwise friction couple is obtained.

Draw a force diagram for the forces acting on the link 2 ($\mathbf{F}_{32}$ is completely known) and obtain the value of $\mathbf{F}_2$.

$$F_2 = 20.3 \text{ N}$$

When the motion of AB is clockwise, DC also moves clockwise. For the equilibrium of the link 4, the friction couples at D and C are to be counter-clockwise. For the equilibrium of the link 2, friction couples at A and B are also to be counter-clockwise. Obtain $\mathbf{F}_{32}$ in the manner discussed above and shown in Fig. 12.27(b) $\mathbf{F}_{12}$ will be equal, parallel and opposite to $\mathbf{F}_{32}$.

$$T_2 = F_{32} \times h = 8.6 \times 208 = 1789 \text{ N.mm}$$

or $\underline{1.789 \text{ N. m}}$

Example 12.14 *Find the minimum value of force $\mathbf{F}_5$ to be applied for the static equilibrium of the follower of Example 12.2 if the friction is also considered of the sliding bearings at B and C. Assume the coefficient of friction as 0.15. Ignore the thickness of the follower.*

Solution When a force analysis with friction is to be made, it is always convenient to seek a rough solution of the problem first without friction. This may be obtained by drawing freehand sketches. The purpose is to know the direction-sense of the normal reactions at B and C as these have to be combined with the friction forces at the sliders. Adopting the procedure of Example 12.2, the forces $\mathbf{F}_3$ and $\mathbf{F}_4$ at the bearings are found to be towards right.

As the force $\mathbf{F}_5$ required for the static equilibrium is to be the least, i.e., any force smaller than that will make the follower move down due to the applied force. Thus, the impending motion of the follower is downwards. (If it is desired to have the maximum force for the static equilibrium, any force greater than that will make the follower move up and the impending motion of the follower will be upwards).

Now, as the impending motion of the follower is downwards, the friction forces at the bearings are upwards. Combining these forces with the reaction forces which are towards right, the lines of action of both the forces $\mathbf{F}_3$ and $\mathbf{F}_4$ are tilted through an angle ϕ given by

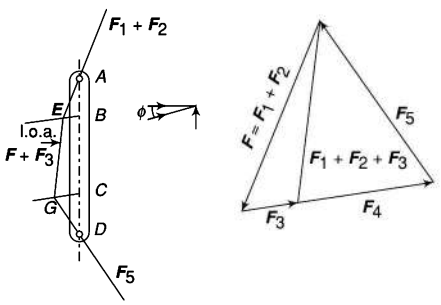

Fig. 12.28

$$\mu = 0.15$$

or $\tan\phi = 0.15$

or $\phi = 8.5^\circ$

On knowing the new lines of action of $\mathbf{F}_3$ and $\mathbf{F}_4$ [Fig. 12.28(a)], the exact solution can be easily obtained as before [Fig. 12.28(b)]. The values obtained are

Magnitude of $\mathbf{F}_3 = 14.5$ N
Magnitude of $\mathbf{F}_4 = 35.5$ N
Magnitude of $\mathbf{F}_5 = 51$ N

Example 12.15 *For the static equilibrium of the quick-return mechanism shown in Fig. 12.29a, find the maximum input torque T_2 required for a force of 300 N on the slider D. Angle θ is 105°. Coefficient of friction $\mu = 0.15$ for each sliding pair.*

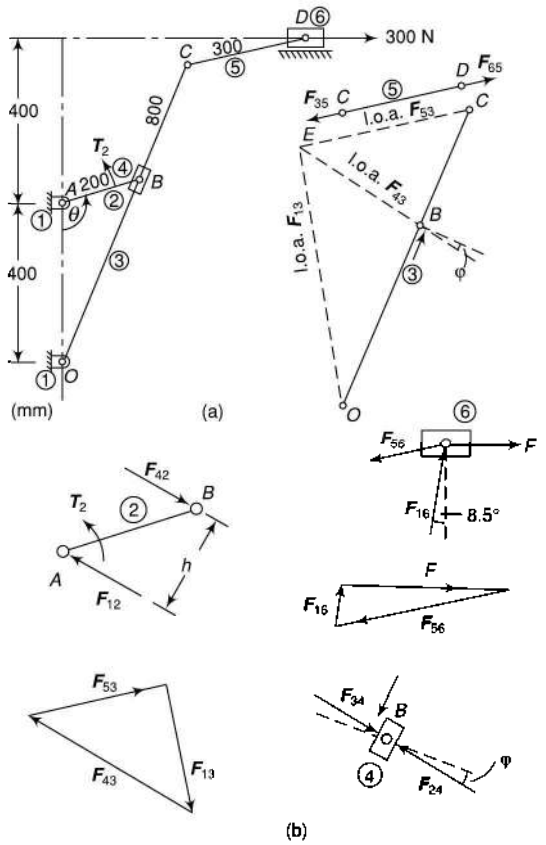

Fig. 12.29

Solution As mentioned in the previous example, to analyse a problem with friction, it is always convenient to seek a rough solution of the problem first without friction which may be obtained by drawing freehand sketches. This is needed to know the direction-sense of the normal reactions at the two sliders which are to be combined with the friction forces.

As the torque required for the static equilibrium is to be the maximum, i.e., any torque more than that will make the slider at D move left. Thus, the impending motion of the slider D is to the left.

Now,

$$\mu = 0.15 \quad \text{or} \quad \tan\phi = 0.15$$

or $\quad \phi = 8.5°$

Solving the problem first without friction,

Slider at D or the link 6 is a three-force member. Lines of action of the forces are

- **F**, as given
- $\mathbf{F}_{56}$ along CD, as link 5 is a two-force member
- $\mathbf{F}_{16}$, normal reaction, perpendicular to slider motion

Draw the force diagram and determine the direction sense of forces $\mathbf{F}_{56}$ and $\mathbf{F}_{16}$ from it (the diagrams may not be to scale). From the force $\mathbf{F}_{56}$, the directions of forces $\mathbf{F}_{65}$, $\mathbf{F}_{35}$ and $\mathbf{F}_{53}$ are known. Now link 3 is a three-force member. Lines of action of the forces are

- $\mathbf{F}_{53}$, known completely through C
- $\mathbf{F}_{43}$, perpendicular to slider motion through B
- $\mathbf{F}_{13}$, unknown through A.

As the lines of action of forces acting through B and C are known, the line of action of $\mathbf{F}_{13}$ through A must also pass through the point of intersection of the other two forces. Find the sense of the direction of force $\mathbf{F}_{43}$ by drawing the force triangle.

After obtaining the sense of direction of the normal forces $\mathbf{F}_{16}$ (upwards) and $\mathbf{F}_{43}$ (towards left), solve the problem by considering the force of friction also. Now the diagrams must be to the scale.

The force of friction at the slider D is towards right as the impending motion of the slider is towards the left. Combining this force with the normal force $\mathbf{F}_{16}$, it is tilted towards left as shown in the figure. Now draw the force triangle by modifying the line of action of force $\mathbf{F}_{16}$. Repeat the above procedure and obtain magnitude as well the direction of the force $\mathbf{F}_{53}$.

The motion of the slider 4 on the link 3 is upwards for impending motion of the slider D towards left. It implies that the motion of the link 3 relative to the link 4 is downwards. Thus, force of friction on the link 3 is upwards (on slider it is downwards). Combining this with the normal force $\mathbf{F}_{43}$ which is towards left, the force $\mathbf{F}_{43}$ is tilted through an angle ϕ as shown in the figure. Now again draw the force triangle with the modified direction of the force $\mathbf{F}_{43}$ for the forces on the link 3 and obtain the magnitude of this force also.

Now,

$$F_{34} = F_{43}$$

As the slider B is a two-force member with forces $\mathbf{F}_{24}$ and $\mathbf{F}_{34}$. Therefore,

$$F_{34} = F_{24} = F_{42} = F_{12}$$

Thus, as the link 2 is acted upon by two forces and a torque,

$$T = F_{42} \times h = 437 \times 147 = 64240 \text{ N.m}$$

$$= \underline{64.24 \text{ N.m}} \text{ counter-clockwise}$$

Example 12.16 *Solve Example 8.28 using graphical method. Take coefficient of friction for the journals as 0.4 instead of 0.05. (A fictitious high value of coefficient of friction is taken so that friction circles of reasonable diameter may be drawn on a smaller scale).*

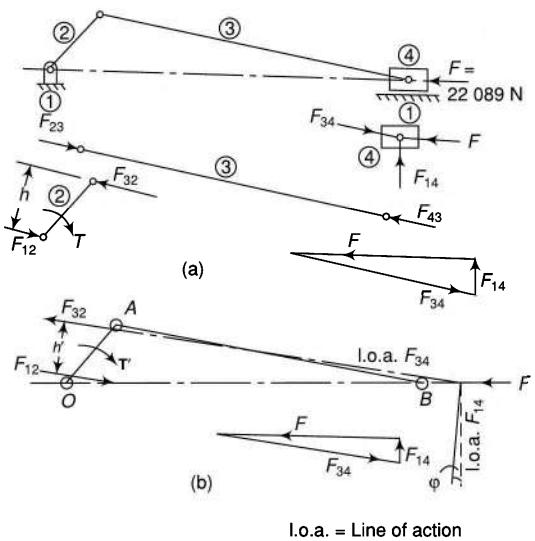

Fig. 12.30

Solution Figure 12.30(a) shows the solution of the problem neglecting the friction. From the force triangle for the forces on the slider,

$$F_{34} = 22\,500 \text{ N}$$

Now,

$$F_{34} = -F_{43} = F_{23} = F_{32}$$

$$T = F_{23} \times h = 22\,500 \times 0.261$$

$$= 5872.5 \text{ N.m clockwise}$$

When friction is considered [Fig.12.30(b)],

Radius of friction circle at $O = 0.4 \times \dfrac{140}{2} = 28$ mm

Radius of friction circle at $A = 0.4 \times \dfrac{120}{2} = 24$ mm

Radius of friction circle at $B = 0.4 \times \dfrac{80}{2} = 16$ mm

As the crank moves counter-clockwise, $\angle OAB$ decreases. AB rotates clockwise relative to OA. Thus, tangent at A is to be such that a counter-clockwise friction couple is obtained.

At B, $\angle OBA$ is increasing. Therefore, BA rotates clockwise relative to the piston. Thus, the tangent to the friction circle is to be such that it gives a counter-clockwise friction couple.

For the sliding pair, $\varphi = \tan^{-} 00.7 = 4°$

The point of intersection of $\mathbf{F}_{34}$ and $\mathbf{F}$ gives the point of concurrency for the forces on the slider. Force $\mathbf{F}_{14}$, i.e., the reaction of the guide, is inclined to the perpendicular to the slider path, and passes through the point of concurrency.

By drawing a force triangle for the forces acting on the slider, $\mathbf{F}_{34}$ is obtained.

The force at A is equal, parallel and opposite to $\mathbf{F}_{32}$ and tangent to the friction circle such that a clockwise friction couple is obtained.

$$T' = \mathbf{F}_{32} \times h' = 22\,200 \times 0.202 = 4484 \text{ N.m clockwise}$$

Summary

1. A pair of action and reaction forces which constrain two connected bodies to behave in a particular manner are known as *constraint forces* whereas forces acting from outside on a system of bodies are called *applied forces.*
2. A member under the action of two forces will be in equilibrium if the forces are of the same magnitude, act along the same line and are in opposite directions.
3. A member under the action of three forces will be in equilibrium if the resultant of the forces is zero and the lines of action of the forces intersect at a point, known as the *point of concurrency*.

4. A member under the action of two forces and an applied torque is in equilibrium if the forces are equal in magnitude, parallel in direction and opposite in sense and the forces form a couple which is equal and opposite to the applied torque.
5. The force exerted by the member *i* on the member *j* is represented by $\mathbf{F}_{ij}$.
6. A *free-body diagram* is a sketch or diagram of a part isolated from the mechanism in order to determine the nature of forces acting on it.
7. In linear systems, if a number of loads act on a system of forces, the net effect is equal to the superposition of the effects of the individual loads taken one at a time. A linear system is one in which the output force is directly proportional to the input force, i.e., in mechanisms in which coulomb or dry friction is neglected.
8. The principle of virtual (imaginary) work can be stated as 'the work done during a virtual displacement from the equilibrium is equal to zero'. Virtual displacement may be defined as an imaginary infinitesimal displacement of the system. By applying this principle, an entire mechanism is examined as a whole and there is no need of dividing it into free bodies.
9. Friction at the bearing is taken into account by drawing friction circles and at the sliding pairs by considering the angle of friction.

Exercises

1. What do you mean by applied and constraint forces? Explain.
2. What are conditions for a body to be in equilibrium under the action of two forces, three forces and two forces and a torque?
3. What are free-body diagrams of a mechanism? How are they helpful in finding the various forces acting on the various members of the mechanism?
4. Define and explain the superposition theorem as applicable to a system of forces acting on a mechanism.
5. What is the principle of virtual work? Explain.
6. How is the friction at the bearings and at sliding pairs of a mechanism is taken into account?
7. The dimensions of a four-link mechanism are: AB = 400 mm, BC = 600 mm, CD = 500 mm, AD = 900 mm, and $\angle DAB = 60°$. AD is the fixed link. E is a point on the link BC such that BE = 400 mm and CE = 300 mm (BEC clockwise)
   A force of 150 $\angle 45°$ N acts on DC at a distance of 250 mm from D. Another force of magnitude 100 $\angle 180°$ N acts at point E. Find the required input torque on the link AB for static equilibrium of the mechanism. (4.6 N.m clockwise)
8. Determine the required input torque on the crank of a slider-crank mechanism for the static equilibrium when the applied piston load is 1500 N. The lengths of the crank and the connecting rod are 40 mm and 100 mm respectively and the crank has turned through 45° from the inner-dead centre. (55 N.m)
9. Find the torque required to be applied to link AB of the linkage shown in Fig. 12.31 to maintain the static equilibrium. (8.85 N.m)

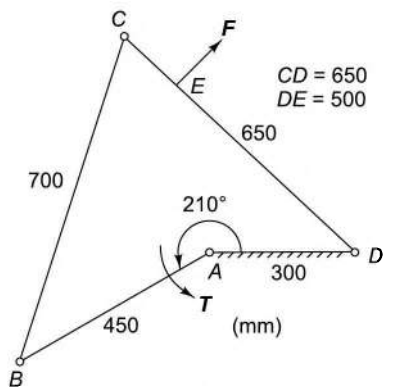

Fig. 11.31

10. Determine the torque required to be applied to the link OA for the static equilibrium of the mechanism shown in Fig. 12.32. (30.42 N.m)

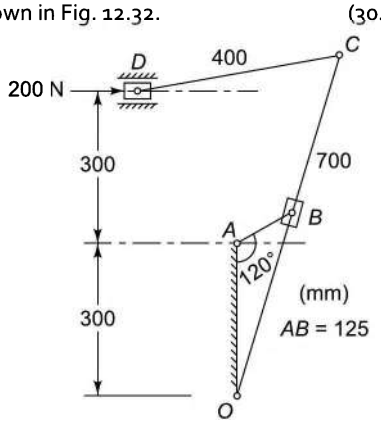

Fig. 12.32

11. For the mechanism shown in Fig. 12.33, find the required input torque for the static equilibrium. The lengths *OA* and *AB* are 250 mm and 650 mm respectively. *F* = 500 N. (68 N.m clockwise)

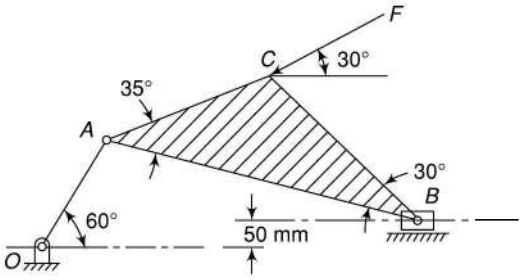

Fig. 12.33

12. For the static equilibrium of the mechanism of Fig. 12.34, find the required input torque. The dimensions are
AB = 150 mm, *BC* = *AD* = 500 mm, *DC* = 300 mm, *CE* = 100 mm and *EF* = 450 mm.
(45.5 N.m clockwise)

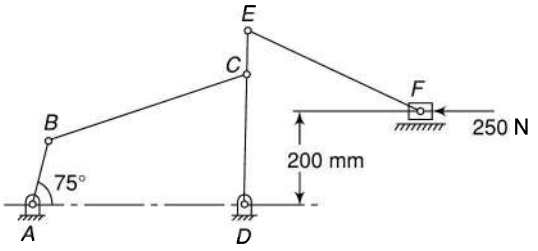

Fig. 12.34

13. Determine the torque to be applied to the link *AB* of a four link mechanism shown in Fig. 12.35 to maintain static equilibrium at the given position.
(44 N.m)

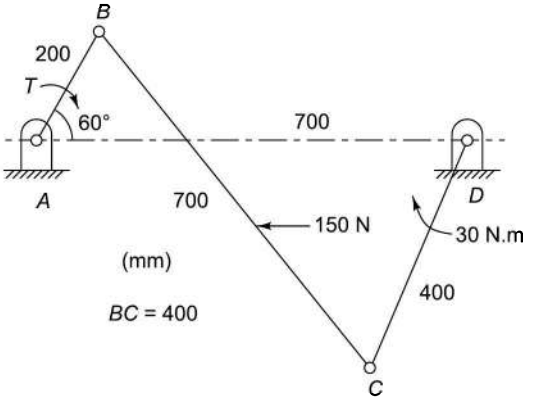

Fig. 12.35

14. A two-cylinder engine shown in Fig. 12.36 is in static equilibrium. The dimensions are *OA* = *OB* = 50 mm, *AC* = *BD* = 250 mm, ∠*AOB* = 90°. Determine the torque on the crank *OAB*.
(106 N.m clockwise)

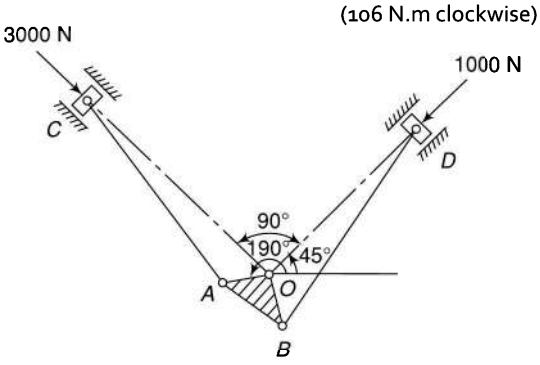

Fig. 12.36

13 DYNAMIC FORCE ANALYSIS

Introduction

Dynamic forces are associated with accelerating masses. As all machines have some accelerating parts, dynamic forces are always present when the machines operate. In situations where dynamic forces are dominant or comparable with magnitudes of external forces and operating speeds are high, dynamic analysis has to be carried out. For example, in case of rotors which rotate at speeds more than 80 000 rpm, even the slightest eccentricity of the centre of mass from the axis of rotation produces very high dynamic forces. This may lead to vibrations, wear, noise or even machine failure.

13.1 D′ALEMBERT'S PRINCIPLE

D′Alembert's principle states that the inertia forces and couples, and the external forces and torques on a body together give statical equilibrium.

Inertia is a property of matter by virtue of which a body resists any change in velocity.

$$\text{Inertia force } \mathbf{F}_i = -m\,\mathbf{f}_g \tag{13.1}$$

where m = mass of body

$\mathbf{f}_g$ = acceleration of centre of mass of the body

The negative sign indicates that the force acts in the opposite direction to that of the acceleration. The force acts through the centre of mass of the body.

Similarly, an inertia couple resists any change in the angular velocity.

Inertia couple,

$$\mathbf{C}_i = -I_g\alpha \tag{13.2}$$

where I_g = moment of inertia about an axis passing through the centre of mass G and perpendicular to plane of rotation of the body

α = angular acceleration of the body

Let $\Sigma\mathbf{F} = \mathbf{F}_1, \mathbf{F}_2, \mathbf{F}_3$, etc. = external forces on the body

and $\Sigma\mathbf{T} = \mathbf{T}_{g1}, \mathbf{T}_{g2}, \mathbf{T}_{g3}$, etc. = external torques on the body about the centre of mass G.

According to D′ Alembert's principle, the vector sum of forces and torques (or couples) has to be zero, i.e.,

$$\Sigma\mathbf{F} + \mathbf{F}_i = 0 \tag{13.3}$$

and

$$\Sigma \mathbf{T} + \mathbf{C}_i = 0 \tag{13.4}$$

These equations are similar to the equation of a body in static equilibrium, i.e., $\Sigma \mathbf{F} = 0$ and $\Sigma \mathbf{T} = 0$.

This suggests that first the magnitudes and the directions of inertia forces and couples can be determined, after which they can be treated just like static loads on the mechanism. Thus, a dynamic analysis problem is reduced to one requiring static analysis.

13.2 EQUIVALENT OFFSET INERTIA FORCE

In plane motions involving accelerations, the inertia force acts on a body through its centre of mass. However, if the body is acted upon by forces such that their resultant does not pass through the centre of mass, a couple also acts on the body. In graphical solutions, it is possible to replace inertia force and inertia couple by an equivalent offset inertia force which can account for both. This is done by displacing the line of action of the inertia force from the centre of mass. The perpendicular displacement h of the force from the centre of mass is such that the torque so produced is equal to the inertia couple acting on the body,

i.e. $$T_i = C_i$$

or $$F_i \times h = C_i$$

or $$h = \frac{C_i}{F_i} = \frac{-I_g\alpha}{-mf_g} = \frac{mk^2\alpha}{mf_g} = \frac{k^2\alpha}{f_g} \tag{13.5}$$

h is taken in such a way that the force produces a moment about the centre of mass, which is opposite in sense to the angular acceleration α.

13.3 DYNAMIC ANALYSIS OF FOUR-LINK MECHANISMS

For dynamic analysis of four-link mechanisms, the following procedure may be adopted:

1. Draw the velocity and acceleration diagrams of the mechanism from the configuration diagram by usual methods.
2. Determine the linear acceleration of the centres of masses of various links, and also the angular accelerations of the links.
3. Calculate the inertia forces and inertia couples from the relations $\mathbf{F}_i = -m\mathbf{f}_g$ and $\mathbf{C}_i = -I_g\alpha$.
4. Replace $\mathbf{F}_i$ with equivalent offset inertia force to take into account $\mathbf{F}_i$ as well as $\mathbf{C}_i$.
5. Assume equivalent offset inertia forces on the links as static forces and analyse the mechanism by any of the methods outlined in Chapter 12.

Example 13.1 *The dimensions of a four-link mechanism are AB = 500 mm, BC = 660 mm, CD = 560 mm and AD = 1000 mm.*

The link AB has an angular velocity of 10.5 rad/s counter-clockwise and an angular retardation of 26 rad/s² at the instant when it makes an angle of 60° with AD, the fixed link.

The mass of the links BC and CD is 4.2 kg/m length. The link AB has a mass of 3.54 kg, the centre of which lies at 200 mm from A and a moment of inertia of 88 500 kg.mm².

Neglecting gravity and friction effects, determine the instantaneous value of the drive torque required to be applied on AB to overcome the inertia forces.

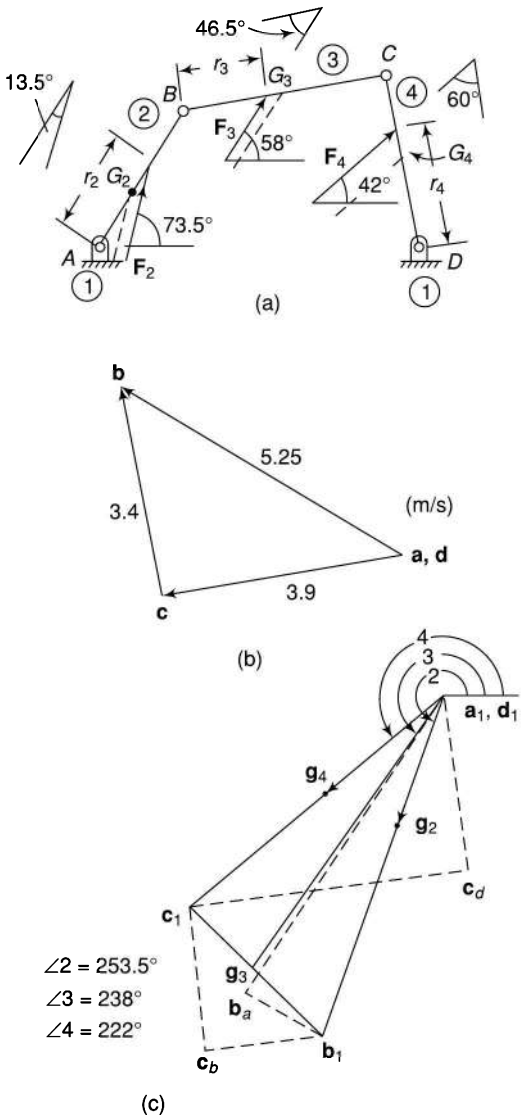

Fig. 13.1

Solution Draw the configuration diagram *ABCD* of the mechanism to a suitable scale [Fig.13.1(a)]. The velocity and acceleration diagrams of the same have been shown in Figs 13.1 (b) and (c).

From the velocity diagram,

v_b or $ab = \omega_{ba} \times AB = 10.5 \times 0.5 = 5.25$ m/s

v_{cd} or $bc = 3.4$ m/s and v_c or $dc = 3.9$ m/s

From the acceleration diagram,

$$f_{ba}^c = \frac{(ab)^2}{AB} = \frac{(5.25)^2}{0.5} = 55.1 \text{ m/s}^2$$

$$f_{ba}^t = \alpha \times AB = 26 \times 0.5 = 13 \text{ m/s}^2$$

$$f_{cb}^c = \frac{(bc)^2}{BC} = \frac{(3.4)^2}{0.66} = 17.5 \text{ m/s}^2$$

$$f_{cd}^c = \frac{(dc)^2}{DC} = \frac{(3.9)^2}{0.56} = 27.2 \text{ m/s}^2$$

Mass of the links

$m_2 = 3.54$ kg

$m_3 = 0.66 \times 4.2 = 2.77$ kg

$m_4 = 0.56 \times 4.2 = 2.35$ kg

Let G_2, G_3 and G_4 denote the centres of masses of links *AB*, *BC* and *CD* respectively. G_2 lies at 200 mm from *A*, and G_3 and G_4 at the midpoints of *BC* and *CD* respectively. Locate these points in the acceleration diagram. Measure the accelerations of G_2, G_3 and G_4.

$F_{g2} = 22.6$ m/s^2 ∠253.5°

$F_{g3} = 52.0$ m/s^2 ∠238°

$F_{g4} = 25.7$ m/s^2 ∠222°

Now find the inertia on the links. These act through their respective centres of mass in the directions opposite to that of accelerations.

$\mathbf{F}_2 = m_2 f_{g2} = 80$ N ∠73.5° (253.5° – 180°)

$\mathbf{F}_3 = m_3 f_{g3} = 144$ N ∠58° (238° – 180°)

$\mathbf{F}_4 = m_4 f_{g4} = 60$ N ∠42° (222° – 180°)

To determine the inertia couples, angular accelerations of the links are to be found.

$\alpha_2 = 26$ rad/s^2 clockwise

$$\alpha_3 = \frac{f_{cb}^t}{CB} = \frac{22.5}{0.66} = 34.1 \text{ rad/s}^2 \text{counter-clockwise}$$

$$\alpha_4 = \frac{f_{cd}^t}{CD} = \frac{44.3}{0.56} = 79.1 \text{ rad/s}^2 \text{counter-clockwise}$$

Then $C_i = I_g \alpha$

However, the inertia couples can be taken into account by replacing the inertia forces with equivalent offset inertia forces.

Now,

$$k_2^2 = \frac{I_g}{m_2} = \frac{88\ 500}{3.54} = 25\ 000 \text{ mm}^2$$

Links 3 and 4 have uniform cross sections,

$$k_3^2 = \frac{l^2}{12} = \frac{(660)^2}{12} = 36\ 300 \text{ mm}^2$$

$$k_4^2 = \frac{l^2}{12} = \frac{(560)^2}{12} = 26\ 133\ \text{mm}^2$$

and $$h_2 = \frac{k^2\alpha}{f_{g2}} = \frac{25\ 000 \times 26}{22\ 600} = 28.8\ \text{mm}$$

$$h_3 = \frac{36\,300 \times 34.1}{52\,000} = 23.8\ \text{mm}$$

$$h_4 = \frac{26133 \times 79.1}{25\,700} = 80.4\ \text{mm}$$

Also,

$$r_2 = 200 + \frac{28.8}{\sin 13.5°} = 325\ \text{mm}$$

$$r_3 = 330 - \frac{23.8}{\sin 46.5°} = 297\ \text{mm}$$

$$r_4 = 280 + \frac{80.3}{\sin 60°} = 373\ \text{mm}$$

An inertia couple acts in a direction opposite to that of the angular acceleration. Thus, offsets h_2, h_3 and h_4 are to be such that the required inertia couples are set up. For example, the angular acceleration of the link 2 is clockwise (being retardation). Therefore, inertia couple must be counter-clockwise. Links 2 and 3 have counter-clockwise accelerations and Thus, the inertia couples are to be clockwise.

Now, assume equivalent offset inertia forces on the links as static forces and solve. This has been done in Examples 12.9 and 12.12.

The required input torque 23.5 N.m (counter-clockwise)

13.4 DYNAMIC ANALYSIS OF SLIDER-CRANK MECHANISMS

The steps outlined for dynamic analysis of a four-link mechanism also hold good for a slider-crank mechanism and the analysis can be carried out in exactly the same manner.

However, an analytical approach is also being described in detail in the following sections.

13.5 VELOCITY AND ACCELERATION OF A PISTON

Figure 13.2 shows a slider-crank mechanism in which the crank OA rotates in the clockwise direction. l and r are the lengths of the connecting rod and the crank respectively.

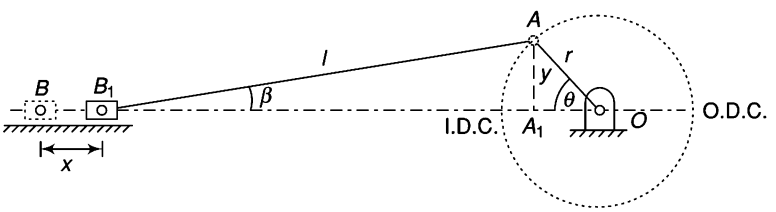

Fig. 13.2

Let x = displacement of piston from inner-dead centre

At the moment when the crank has turned through angle θ from the inner-dead centre,

$$\begin{aligned} x &= B_1B = BO - B_1O \\ &= BO - (B_1A_1 + A_1O) \\ &= (l + r) - (l \cos\beta + \cos\theta) \\ &= (nr + r) - (nr \cos\beta + r \cos\theta) \quad \text{(taking } l/r = n\text{)} \\ &= r\,[(n + 1) - (n \cos\beta + \cos\theta)] \end{aligned} \tag{13.6}$$

where $$\cos\beta = \sqrt{1 - \sin^2\beta} = \sqrt{1 - \frac{y^2}{l^2}}$$

$$= \sqrt{1 - \frac{(r \sin\theta)^2}{l^2}}$$

$$= \sqrt{1 - \frac{\sin^2\theta}{n^2}}$$

$$= \frac{1}{n}\sqrt{n^2 - \sin^2\theta}$$

$$x = r[(n+1) - (\sqrt{n^2 - \sin^2\theta} + \cos\theta)]$$

$$= r[(1 - \cos\theta) + (n - \sqrt{n^2 - \sin^2\theta})] \tag{13.7}$$

If the connecting rod is very large as compared to the crank, n^2 will be large and the maximum value of $\sin^2\theta$ can be unity. Then $\sqrt{n^2 - \sin^2\theta}$ will be approaching $\sqrt{n^2}$ or n, and

$$x = r\,(1 - \cos\theta) \tag{13.8}$$

This is the expression for a simple harmonic motion. Thus, the piston executes a simple harmonic motion when the connecting rod is large.

Velocity of Piston

$$v = \frac{dx}{dt} = \frac{dx}{d\theta}\frac{d\theta}{dt}$$

$$= \frac{d}{d\theta}[r\{(1 - \cos\theta) + n - (n^2 - \sin^2\theta)^{1/2}\}]\frac{d\theta}{dt}$$

$$= r[(0 + \sin\theta) + 0 - \frac{1}{2}(n^2 - \sin^2\theta)^{1/2}(-2\sin\theta\cos\theta)]\omega$$

$$= r\omega\left[\sin\theta + \frac{\sin 2\theta}{2\sqrt{n^2 - \sin^2\theta}}\right] \tag{13.9}$$

If n^2 is large compared to $\sin^2\theta$,

$$v = r\omega\left[\sin\theta + \frac{\sin 2\theta}{2n}\right] \tag{13.10}$$

If $\frac{\sin 2\theta}{2n}$ can be neglected (when n is quite large),

$$v = r\omega\sin\theta \tag{13.11}$$

Acceleration of Piston

$$f = \frac{dv}{dt} = \frac{dv d\theta}{d\theta dt}$$

$$= \frac{d}{d\theta}\left[r\omega\left(\sin\theta + \frac{\sin 2\theta}{2n}\right)\right]\omega$$

$$= r\omega\left(\cos\theta + \frac{2\cos 2\theta}{2n}\right)\omega$$

$$= r\omega^2\left(\cos\theta + \frac{\cos 2\theta}{n}\right) \tag{13.12}$$

If n is very very large,

$$f = r\omega^2 \cos\theta \text{ as in case of SHM} \tag{13.13}$$

When $\theta = 0°$, i.e., at IDC, $f = r\omega^2\left(1 + \frac{1}{n}\right)$

When $\theta = 180°$, i.e., at ODC, $f = r\omega^2\left(-1 + \frac{1}{n}\right)$

At $\theta = 180°$, when the direction of motion is reversed,

$$f = r\omega^2\left(1 - \frac{1}{n}\right) \tag{13.14}$$

Note that this expression of acceleration has been obtained by differentiating the approximate expression for the velocity. It is, usually, very cumbersome to differentiate the exact expression for velocity. However, this gives satisfactory results.

13.6 ANGULAR VELOCITY AND ANGULAR ACCELERATION OF CONNECTING ROD

As $y = l\sin\beta = r\sin\theta$

$$\therefore \qquad \sin\beta = \frac{\sin\theta}{n} \qquad (n = l/r)$$

Differentiating with respect to time,

$$\cos\beta\frac{d\beta}{dt} = \frac{1}{n}\cos\theta\frac{d\theta}{dt}$$

$$\frac{d\beta}{dt} = \frac{\cos\theta}{n\cos\beta}\omega$$

or

$$\omega_c = \omega\frac{\cos\theta}{n\frac{1}{n}\sqrt{n^2 - \sin^2\theta}} \tag{13.15}$$

where ω_c is the angular velocity of the connecting rod

$$= \omega\frac{\cos\theta}{\sqrt{n^2 - \sin^2\theta}}$$

Let α_c = angular acceleration of the connecting rod

$$= \frac{d\omega_c}{dt} = \frac{d\omega_c}{d\theta}\frac{d\theta}{dt}$$

$$= \omega \frac{d}{d\theta}[\cos\theta\,(n^2 - \sin^2\theta)^{-1/2}]\omega$$

$$= \omega^2 [-\cos\theta \frac{1}{2}(n^2 - \sin^2\theta)^{-3/2}(-2\sin\theta\cos\theta) + (n^2 - \sin^2\theta)^{-1/2}(-\sin\theta)]$$

$$= \omega^2 \sin\theta \left[\frac{\cos^2\theta - (n^2 - \sin^2\theta)}{(n^2 - \sin^2\theta)^{3/2}}\right]$$

$$= -\omega^2 \sin\theta \left[\frac{n^2 - 1}{(n^2 - \sin^2\theta)^{3/2}}\right] \tag{13.16}$$

The negative sign indicates that the sense of angular acceleration of the rod is such that it tends to reduce the angle β. Thus, in the given case, the angular acceleration of the connecting rod is clockwise.

13.7 ENGINE FORCE ANALYSIS

An engine is acted upon by various forces such as weight of reciprocating masses and connecting rod, gas forces, forces due to friction and inertia forces due to acceleration and retardation of engine elements, the last being dynamic in nature. In this section, the analysis is made of the forces neglecting the effect of the weight and the inertia effect of the connecting rod.

(i) Piston Effort (Effective Driving Force)

The piston effort is termed as the net or effective force applied on the piston. In reciprocating engines, the reciprocating masses accelerate during the first half of the stroke and the inertia force tends to resist the same. Thus, the net force on the piston is decreased. During the later half of the stroke, the reciprocating masses decelerate and the inertia force opposes this deceleration or acts in the direction of the applied gas pressure and thus, increases the effective force on the piston.

In a vertical engine, the weight of the reciprocating masses assists the piston during the outstroke (down stroke), thus, increasing the piston effort by an amount equal to the weight of the piston. During the instroke (upstroke), the piston effort is decreased by the same amount.

Let A_1 = area of the cover end
A_2 = area of the piston rod end
P_1 = pressure on the cover end
P_2 = pressure on the rod end
m = mass of the reciprocating parts

Force on the piston due to gas pressure, $F_p = p_1 A_1 - p_2 A_2$ (13.17)

Inertia force, $F_b = mf = mr\omega^2\left(\cos\theta + \frac{\cos 2\theta}{n}\right)$ (13.18)

which is in the opposite direction to that of the acceleration of the piston.

Net (effective) force on the piston, $F = F_p - F_b$ (13.19)

In case friction resistance F_f is also taken into account,

Force on the piston, $F = F_p - F_b - F_f$

In case of vertical engines, the weight of the piston or reciprocating parts also acts as force and thus force on the piston, $F = F_p + mg - F_b - F_f$

(ii) Force (thrust) along the Connecting Rod

Let F_c = Force in the connecting rod (Fig. 13.3)

Then equating the horizontal components of forces,

$$F_c \times \cos\beta = F \quad \text{or} \quad F_c = \frac{F}{\cos\beta}$$

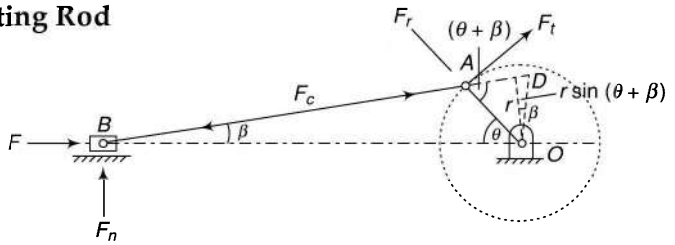

Fig. 13.3

(iii) Thrust on the Sides of Cylinder

It is the normal reaction on the cylinder walls.

$$F_n = F_c \sin\beta = F\tan\beta$$

(iv) Crank Effort

Force is exerted on the crankpin as a result of the force on the piston. *Crank effort* is the net effort (force) applied at the crankpin perpendicular to the crank which gives the required turning moment on the crankshaft.

Let F_t = crank effort

As

$$F_t \times r = F_c\, r \sin(\theta+\beta) \qquad \text{(refer to Fig. 13.3)}$$

$$\therefore \quad F_t = F_c \sin(\theta+\beta)$$

$$= \frac{F}{\cos\beta}\sin(\theta+\beta) \qquad (13.20)$$

(v) Thrust on the Bearings

The component of F_c along the crank (in the radial direction) produces a thrust on the crankshaft bearings.

$$F_r = F_c\cos(\theta+\beta) = \frac{F}{\cos\beta}\cos(\theta+\beta)$$

13.7 TURNING MOMENT ON CRANKSHAFT

$$T = F_t \times r$$

$$= \frac{F}{\cos\beta}\sin(\theta+\beta)\times r$$

$$= \frac{Fr}{\cos\beta}(\sin\theta\cos\beta + \cos\theta\sin\beta)$$

$$= Fr\left(\sin\theta + \cos\theta\sin\beta\frac{1}{\cos\beta}\right)$$

$$= Fr\left(\sin\theta + \cos\theta\frac{\sin\theta}{n}\frac{1}{\frac{1}{n}\sqrt{n^2-\sin^2\theta}}\right)$$

$$= Fr\left(\sin\theta + \frac{2\sin\theta\cos\theta}{2\sqrt{n^2-\sin^2\theta}}\right)$$

$$= Fr\left(\sin\theta + \frac{\sin 2\theta}{2\sqrt{n^2-\sin^2\theta}}\right) \tag{13.21}$$

Also, as $r\sin(\theta+\beta) = OD\cos\beta$

$$T = F_t \times r$$

$$= \frac{F}{\cos\beta} r\sin(\theta+\beta) \qquad \text{[From (13.20)]}$$

$$= \frac{F}{\cos\beta}(OD\cos\beta)$$

$$= F \times OD \tag{13.22}$$

Example 13.2 *A horizontal gas engine running at 210 rpm has a bore of 220 mm and a stroke of 440 mm. The connecting rod is 924 mm long and the reciprocating parts weigh 20 kg. When the crank has turned through an angle of 30° from the inner dead centre, the gas pressures on the cover and the crank sides are 500 kN/m² and 60 kN/m² respectively. Diameter of the piston rod is 40 mm. Determine*

(i) turning moment on the crank shaft
(ii) thrust on the bearings
(iii) acceleration of the flywheel which has a mass of 8 kg and radius of gyration of 600 mm while the power of the engine is 22 kW

Solution

$r = 0.44/2 = 0.22$ m $\quad l = 0.924$ m
$N = 210$ rpm $\quad m = 20$ kg
$\theta = 30°$

$$n = l/r = 0.924/0.22 = 4.2$$

$$\omega = \frac{2\pi \times 210}{60} = 22 \text{ rad/s}$$

$$\sin\beta = \frac{\sin\theta}{n} = \frac{\sin 30°}{4.2} = 0.119$$

or $\beta = 6.837°$

$$F_p = (p_1A_1 - p_2A_2)$$

$$= (500\times10^3 \times \frac{\pi}{4}\times 0.22^2$$

$$-60\times10^3\times\frac{\pi}{4}\times(0.22^2 - 0.04^2)$$

$$= 19\,007 - 2206$$

$$= 16\,801 \text{ N}$$

Inertia force, $F_b = mf = mr\omega^2\left(\cos\theta + \frac{\cos 2\theta}{n}\right)$

$$= 20\times0.22\times(22)^2\left(\cos 30° + \frac{\cos 60°}{4.2}\right)$$

$$= 2098 \text{ N}$$

Piston effort, $F = F_p - F_b$

$= 16\,801 - 2098 = 14\,703$ N

(i) Turning moment, $T = \frac{F}{\cos\beta}\sin(\theta+\beta)\times r$

$$= \frac{14\,703}{\cos 6.837}\sin(30° + 6.837°)\times 0.22$$

$$= 1953 \text{ N.m}$$

(ii) Thrust on the bearings, F_r

$$= \frac{F}{\cos\beta}\cos(\theta+\beta)$$

$$= \frac{14\ 703}{\cos 6.837} \cos(30^\circ + 6.837^\circ)$$

$= 11\ 852$ N

(iii) Accelerating torque = Turning moment – Resisting torque

Resisting torque can be found from

$P = T\omega$

or $22\ 000 = T \times 22$

or $T = 1000$ N.m

$\therefore$ Accelerating torque = 1953 – 1000

or $I\alpha = mk^2.\ \alpha = 953$

or $8 \times 0.6^2 \times \alpha = 953$

or Acceleration of flywheel, $\alpha = 330.9$ rad/s^2

Example 13.3 *The crank and connecting rod of a vertical petrol engine, running at 1800 rpm are 60 mm and 270 mm respectively. The diameter of the piston is 100 mm and the mass of the reciprocating parts is 1.2 kg. During the expansion stroke when the crank has turned 20° from the top dead centre, the gas pressure is 650 kN/m². Determine the*

(i) net force on the piston

(ii) net load on the gudgeon pin

(iii) thrust on the cylinder walls

(iv) speed at which the gudgeon pin load is reversed in direction

Solution

$r = 0.06$ m $\quad l = 0.27$ m

$N = 1800$ rpm $\quad p = 650$ kN/m^2

$m = 1.2$ kg $\quad d = 0.1$ m

$\theta = 20°$

Refer Fig. 13.4,

$n = l/r = 0.27/0.06 = 4.5$

$$\omega = \frac{2\pi \times 1800}{60} = 188.5 \text{ rad/s}$$

$$\cos\beta = \frac{1}{n}\sqrt{n^2 - \sin^2\theta} = \frac{1}{4.5}\sqrt{4.5^2 - \sin^2 20^\circ}$$

$$= 0.9971$$

$$\therefore \quad \beta = 4.36^\circ$$

$$\left(\text{or} \quad \sin\beta = \frac{\sin\theta}{n} = \frac{\sin 20^\circ}{4.5} = 0.076 \text{ or } \beta = 4.36^\circ\right)$$

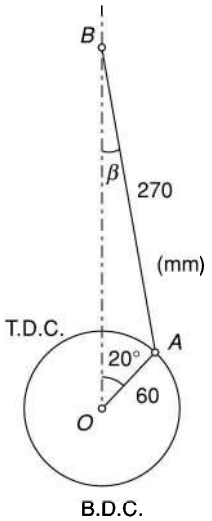

Fig. 13.4

Force due to gas pressure, F_p = Area × Pressure

$$= \frac{\pi}{4}(d)^2 \times p = \frac{\pi}{4}(0.1)^2 \times 650 \times 10^3$$

$= 5105$ N

$$\text{Inertia force, } F_b = mr\omega^2\left(\cos\theta + \frac{\cos 2\theta}{n}\right)$$

$$= 1.2 \times 0.06 \times (188.5)^2\left(\cos 20^\circ + \frac{\cos 40^\circ}{4.5}\right)$$

$= 2840$ N

(i) Net (effective) force on the piston,

$F = F_p - F_b + mg$

$= 5105 - 2840 + 1.2 \times 9.81$

$= \underline{2276.8}$ N

(ii) Net load on the gudgeon pin = Force in the connecting rod

$$= \frac{F}{\cos\beta} = \frac{2276.8}{0.9971} = \underline{2283.4} \text{ N}$$

(iii) Thrust on the cylinder walls = $F \tan\beta$

$= 2276.8 \tan 4.36° = 173.5$ N

(iv) Speed at which the gudgeon pin load is reversed in direction,

$$F = F_p - mr\omega^2\left(\cos\theta + \frac{\cos 2\theta}{n}\right) + mg$$

$$0 = 5105 - 1.2 \times 0.06\omega^2\left(\cos 20^\circ + \frac{\cos 40^\circ}{4.5}\right) + 1.2 \times 9.81$$

$0.079\,91\ \omega^2 = 5116.8$

$\omega = 253.04$

$\frac{2\pi N}{60} = 253.04$

N = 2416.3 rpm

Example 13.4 *In a vertical double-acting steam engine, the connecting rod is 4.5 times the crank. The weight of the reciprocating parts is 120 kg and the stroke of the piston is 440 mm. The engine runs at 250 rpm. If the net load on the piston due to steam pressure is 25 kN when the crank has turned through an angle of 120° from the top dead centre, determine the*

(i) thrust in the connecting rod
(ii) pressure on slide bars
(iii) tangential force on the crank pin
(iv) thrust on the bearings
(v) turning moment on the crankshaft.

Solution

$r = 0.44/2 = 0.22$ m $N = 250$ rpm
$F = 25$ kN $m = 120$ kg
$\theta = 120°$ $n = 4.5$

$$\omega = \frac{2\pi \times 250}{60} = 26.18 \text{ rad/s}$$

$$\sin\beta = \frac{\sin\theta}{n} = \frac{\sin 120^\circ}{4.5} = 0.1925$$

or $\beta = 11.1°$

Accelerating force, $F_b = mr\omega^2\left(\cos\theta + \frac{\cos 2\theta}{n}\right)$

$$= 120 \times 0.22 \times (26.18)^2\left(\cos 120^\circ + \frac{\cos(240^\circ)}{4.5}\right)$$

$= -11\,058$ N

Force on the piston, $F = F_p + mg - F_b$

$= 25\,000 + 120 \times 9.81 - (-11\,058)$

$= 37\,235$ N

(i) Thrust in the connecting rod,

$$F_c = \frac{F}{\cos\beta} = \frac{37\,235}{\cos 11.1} = 37\,945 \text{ N}$$

(ii) Pressure on slide bars,

$F_n = F \tan\beta = 37\,235 \tan 11.1° = 7305$ N

(iii) Tangential force on the crank pin

$F_t = F_c \sin(\theta + \beta)$

$= 37\,945 \times \sin(120° + 11.1°) = 28\,594$ N

(iv) Thrust on the bearings,

$F_r = F_c \cos(\theta + \beta) = 37\,945 \times \cos(120° + 11.1°) = -24\,944$ N

(v) Turning moment on the crankshaft

$T = F_t \times r = 28\,594 \times 0.22 = 6290.7$ N.m

Example 13.5 *The crank and the connecting rod of a vertical single cylinder gas engine running at 1800 rpm are 60 mm and 240 mm respectively. The diameter of the piston is 80 mm and the mass of the reciprocating parts is 1.2 kg. At a point during the power stroke when the piston has moved 20 mm from the top dead centre position, the pressure on the piston is 800 kN/m². Determine the*

(i) net force on the piston
(ii) thrust in the connecting rod
(iii) thrust on the sides of cylinder walls
(iv) engine speed at which the above values are zero.

Solution

$r = 0.06$ m $l = 0.24$ m
$N = 1800$ rpm $m = 1.2$ kg
$n = 0.24/0.06 = 4$ $d = 0.08$ m

$$\omega = \frac{2\pi \times 1800}{60} = 188.5 \text{ rad/s}$$

Draw the configuration for the given position to some scale (Fig. 13.5) and obtain angle θ which is found to be 43.5°.

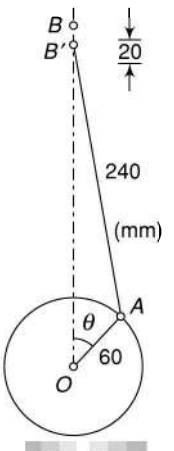

Fig. 13.5

$$\sin\beta = \frac{\sin\theta}{n} = \frac{\sin 43.5^\circ}{4} = 0.1721$$

or $\beta = 9.91^\circ$

Force due to gas pressure,

F_p = Area × Pressure

$$= \frac{\pi}{4}(d)^2 \times p = \frac{\pi}{4}(0.08)^2 \times 800 \times 10^3 = 4021 \text{ N}$$

Accelerating force, $F_b = mr\omega^2\left(\cos\theta + \frac{\cos 2\theta}{n}\right)$

$$= 1.2 \times 0.06 \times (188.5)^2\left(\cos 43.5^\circ + \frac{\cos 87^\circ}{4}\right)$$

$= 1889$ N

(i) Force on the piston, $F = F_p + mg - F_b$
$= 4021 + 1.2 \times 9.81 - 1889$
$= 2144$ N

(ii) Thrust in the connecting rod,

$$F_c = \frac{F}{\cos\beta} = \frac{2144}{\cos 9.91^\circ} = 2176 \text{ N}$$

(iii) Thrust on the sides of cylinder walls,
$F_n = F\tan\beta = 2176 \tan 9.91^\circ = 380$ N

(iv) The above values are zero at the speed when the force on the piston F is zero.

$$F = F_p - mr\omega^2\left(\cos\theta + \frac{\cos 2\theta}{n}\right) + mg$$

$$0 = 4021 - 1.2 \times 0.06\,\omega^2\left(\cos 43.5^\circ + \frac{\cos 87^\circ}{4}\right) + 1.2 \times 9.81$$

$$0.053\,17\,\omega^2 = 4032.8$$

$$\omega = 75\,849$$

$$\frac{2\pi N}{60} = 275.4$$

$$N = 2630 \text{ rpm}$$

13.8 DYNAMICALLY EQUIVALENT SYSTEM

In the previous section, the expression for the turning moment of the crankshaft has been obtained for the net force F on the piston. This force F may be the gas force with or without the consideration of inertia force acting on the piston. As the mass of the connecting rod is also significant, the inertia due to the same should also be taken into account. As neither the mass of the connecting rod is uniformly distributed nor the motion is linear, its inertia cannot be found as such. Usually, the inertia of the connecting rod is taken into account by considering a *dynamically-equivalent system.* A dynamically equivalent system means that the rigid link is replaced by a link with two point masses in such a way that it has the same motion as the rigid link when subjected to the same force, i.e., the centre of mass of the equivalent link has the same linear acceleration and the link has the same angular acceleration.

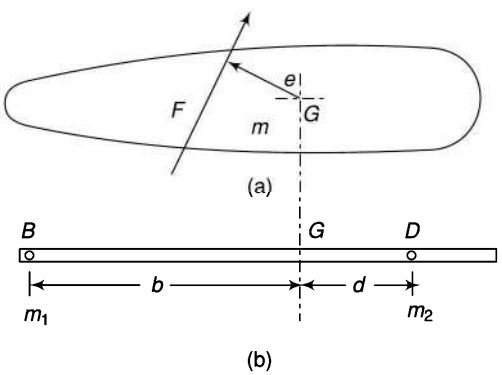

Fig. 13.6

Figure 13.6 (a) shows a rigid body of mass m with the centre of mass at G. Let it be acted upon by a force F which produces linear acceleration f of the centre of mass as well as the angular acceleration of the body as the force F does not pass through G.

As we know, $F = m.f$ and $F.e = I.\,\alpha$

Acceleration of G, $$f = \frac{F}{m}$$

Angular acceleration of the body, $\alpha = \dfrac{F.e}{I}$

where e = perpendicular distance of F from G

and I = moment of inertia of the body about perpendicular axis through G

Now to have the dynamically equivalent system, let the replaced massless link [Fig. 13.6(b)] has two point masses m_1 (at B and m_2 at D) at distances b and d respectively from the centre of mass G as shown in Fig. 13.6 (b).

1. To satisfy the first condition, as the force F is to be same, the sum of the equivalent masses m_1 and m_2 has to be equal to m to have the same acceleration. Thus, $m = m_1 + m_2$.
2. To satisfy the second condition, the numerator $F.e$ and the denominator I must remain the same. F is already taken same, Thus, e has to be same which means that the perpendicular distance of F from G should remain same or the combined centre of mass of the equivalent system remains at G. This is possible if

$$m_1 b = m_2 d$$

To have the same moment of inertia of the equivalent system about perpendicular axis through their combined centre of mass G, we must have

$$I = m_1 b^2 + m_2 d^2$$

Thus, any distributed mass can be replaced by two point masses to have the same dynamical properties if the following conditions are fulfilled:

(i) The sum of the two masses is equal to the total mass.
(ii) The combined centre of mass coincides with that of the rod.
(iii) The moment of inertia of two point masses about the perpendicular axis through their combined centre of mass is equal to that of the rod.

13.9 INERTIA OF THE CONNECTING ROD

Let the connecting rod be replaced by an equivalent massless link with two point masses as shown in Fig. 13.7. Let m be the total mass of the connecting rod and one of the masses be located at the small end B. Let the second mass be placed at D and

m_b = mass at B

m_d = mass at D

Take, $BG = b$ and $DG = d$

Then

$$m_b + m_d = m \quad \text{(i)}$$

and

$$m_b.b = m_d.d \quad \text{(ii)}$$

From (i) and (ii)

$$m_b + \left(m_b \frac{b}{d}\right) = m$$

or

$$m_b\left(1 + \frac{b}{d}\right) = m$$

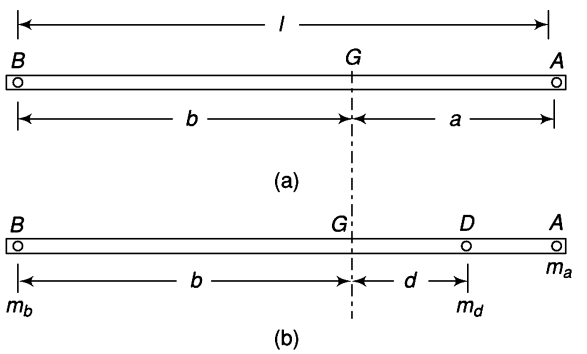

Fig. 13.7

or
$$m_b\left(\frac{b+d}{d}\right) = m$$

or
$$m_b = m\frac{d}{b+d}$$

Similarly,

$$m_d = m\frac{b}{b+d}$$

Also,
$$\begin{aligned} I &= m_b b^2 + m_d d^2 \\ &= m\frac{d}{b+d}b^2 + m\frac{b}{b+d}d^2 \\ &= mbd\left(\frac{b+d}{b+d}\right) \\ &= mbd \end{aligned} \tag{13.23}$$

Let k = radius of gyration of the connecting rod about an axis through the centre of mass G perpendicular to the plane of motion.

Then
$$mk^2 = mbd$$

or
$$k^2 = bd \tag{13.24}$$

This result can be compared with that of an equivalent length of a simple pendulum in the following manner:

The equivalent length of a simple pendulum is given by

$$L = \frac{k^2}{b} + b = d + b \qquad \left(\frac{k^2}{b} = d\right)$$

where b is the distance of the point of suspension from the centre of mass of the body and k is the radius of gyration. Thus, in the present case, $d + b$ (= L) is the equivalent length if the rod is suspended from the point B, and D is the centre of oscillation or percussion.

However, in the analysis of the connecting rod, it is much more convenient if the two point masses are considered to be located at the centre of the two end bearings, i.e., at A and B.

Let m_a = mass at A, distance $AG = a$

Then $m_a + m_b = m$

$$m_a = m\frac{b}{a+b} = m\frac{b}{l} \qquad (l = \text{length of rod})$$

$$m_b = m\frac{a}{a+b} = m\frac{a}{l}$$

$$I' = mab$$

Assuming $a > d, I' > I$

This means that by considering the two masses at A and B instead of at D and B, the inertia torque is increased from the actual value ($T = I\alpha_c$). The error is corrected by incorporating a correction couple.

Then,

$$\begin{aligned} \text{correction couple, } \Delta T &= \alpha_c\,(mab - mbd) \\ &= mb\alpha_c\,(a - d) \\ &= mb\alpha_c\,[(a + b) - (b + d)] \\ &= mb\alpha_c\,(l - L) \qquad \text{(taking } b + d = L) \end{aligned} \tag{13.25}$$

This correction couple must be applied in the opposite direction to that of the applied inertia torque. As the direction of the applied inertia torque is always opposite to the direction of the angular acceleration, the direction of the correction couple will be the same as that of angular acceleration, i.e., in the direction of the decreasing angle β.

The correction couple will be produced by two equal, parallel and opposite forces F_y acting at the gudgen pin and crankpin ends perpendicular to the line of stroke (Fig. 13.8). The force at B is taken by the reaction of guides.

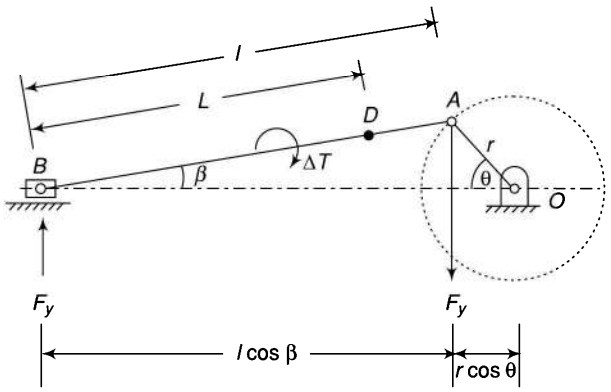

Fig. 13.8

Turning moment at crankshaft due to force at A or correction torque,

$$\begin{aligned} T_c &= F_y \times r\cos\theta \\ &= \frac{\Delta T}{l\cos\beta} \times r\cos\theta \qquad (\because \Delta T = F_y l\cos\beta) \\ &= \frac{\Delta T}{(l/r)}\frac{\cos\theta}{\cos\beta} \\ &= \Delta T \frac{\cos\theta}{n\frac{1}{n}\sqrt{n^2 - \sin^2\theta}} \\ &= \Delta T \frac{\cos\theta}{\sqrt{n^2 - \sin^2\theta}} \end{aligned} \tag{13.26}$$

This correction torque is to be deducted from the inertia torque acting on the crankshaft.

Also, due to the weight of the mass at A, a torque is exerted on the crankshaft which is given by

$$T_a = (m_a g) r\cos\theta \tag{13.27}$$

In case of vertical engines, a torque is also exerted on the crankshaft due to the weight of mass at B and the expression will be similar to Eq. (13.21), i.e.,

$$T_b = (m_b g)\, r\left(\sin\theta + \frac{\sin 2\theta}{2\sqrt{n^2 - \sin^2\theta}}\right) \tag{13.28}$$

The net torque or turning moment on the crankshaft will be the algebraic sum of the

(i) turning moment due to the force of gas pressure (T)

(ii) inertia torque due to the inertia force at the piston as a result of inertia of the reciprocating mass including the mass of the portion of the connecting rod (T_b)

(iii) inertia torque due to the weight (force) of the mass at the crank pin which is the portion of the mass of the connecting rod taken at the crank pin (T_a).
(iv) inertia torque due to the correction couple (T_c)
(v) turning moment due to the weight (force) of the piston in case of vertical engines

Usually, it is convenient to combine the forces at the piston occurring in (ii) and (v).

13.10 INERTIA FORCE IN RECIPROCATING ENGINES (GRAPHICAL METHOD)

The inertia forces in reciprocating engines can be obtained graphically as follows (Fig. 13.9).

1. Draw the acceleration diagram by Klein's construction (refer Section 3.8). Remember that the acceleration diagram is turned through 180° from the actual diagram and therefore, the directions of accelerations are towards O [Fig.13.9(a)].
2. Replace the mass of the connecting rod by a dynamically equivalent system of two masses. If one mass is placed at B, the other will be at D given by $d = k^2/b$, where k is the radius of gyration and b and d are the distances of the centre of mass from B and D respectively.

   Point D can also be obtained graphically. Draw $GE \perp AB$ at G and take $GE = k$. Make $\angle BED = 90°$, and obtain the point D on AB.
3. Obtain the accelerations of points G and D from the acceleration diagram by locating the points g_1 and d_1 on Ab_1 which represents the total acceleration of the connecting rod.

   As Ad_1/AD and Ag_1/AG are equal to Ab_1/AB, Dd_1 and Gg_1 can be drawn parallel to OB. Thus, d_1O and g_1O represent accelerations of points D and G respectively.
4. The acceleration of the mass at B is along BO and in the direction B to O. Therefore, the inertia force due to this mass acts in the opposite direction.

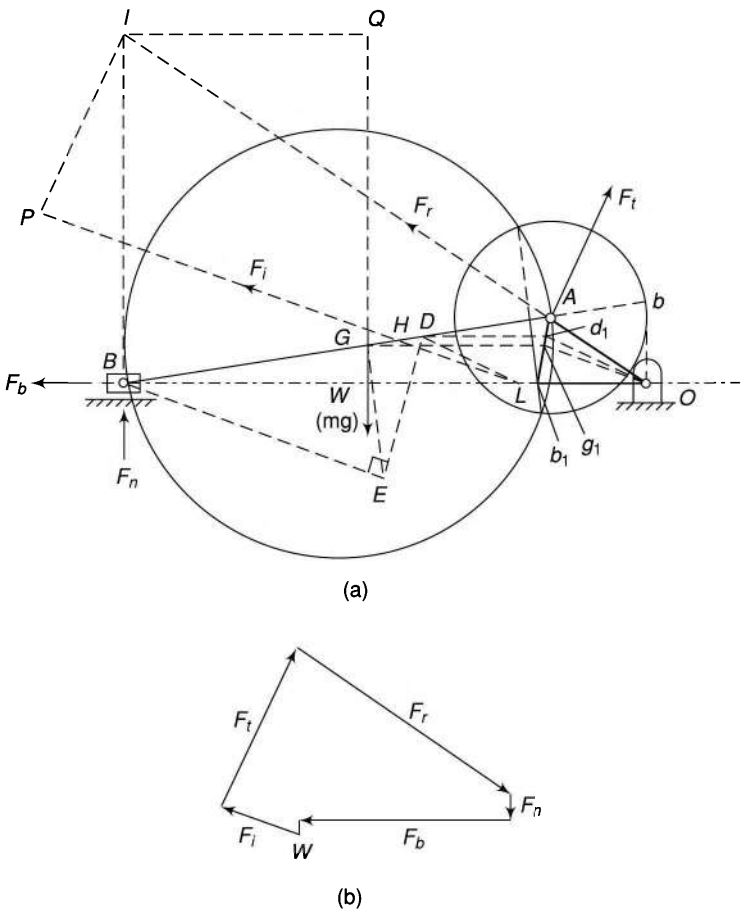

Fig. 13.9

5. The acceleration of the mass at D is parallel to d_1O and in the direction d_1 to O, therefore, the inertia force due to this mass acts in the opposite direction through D. Draw a line parallel to Od_1 through D to represent the direction of the inertia force.

Let the lines of action of the two inertia forces due to masses at B and D meet at L. Then the resultant of the forces which is the total inertia force of the connecting rod and is parallel to Og_1 must also pass through the point L. Therefore, draw a line parallel to Og_1 through L to represent the direction of the inertia force of the connecting rod.

Now, the connecting rod is under the action of the following forces:

- Inertia force of reciprocating part $\mathbf{F}_b$ along OB
- The reaction of the guide $\mathbf{F}_n$ (magnitude and direction sense unknown)
- Inertia force of the connecting rod $\mathbf{F}_i$
- The weight of the connecting rod $\mathbf{W}$ (= mg)
- Tangential force $\mathbf{F}_t$ at the crank pin (to be found)
- Radial force $\mathbf{F}_r$ at the crank pin along OA (magnitude and direction sense unknown).

Produce the lines of action of $\mathbf{F}_i$ and $\mathbf{F}_n$ to meet at I, the instantaneous centre of the connecting rod. Draw IP and IQ perpendicular to the lines of action of $\mathbf{F}_i$ and the weight $\mathbf{W}$ respectively.

For the equilibrium of the connecting rod, taking moments about I,

$$F_t \times IA = F_b \times IB + F_i \times IP + mg \times IQ \tag{13.29}$$

Obtain the value of F_t from it and draw the force polygon to find the magnitudes and directions of forces $\mathbf{F}_r$ and $\mathbf{F}_n$ [Fig. 13.9(b)].

In the above equation, F_t is the force required for the static equilibrium of the mechanism or it is the force required at the crank pin to overcome the inertia of the reciprocating parts and of the connecting rod. If it indicates a clockwise torque, then

Inertia torque on the crankshaft = $F_i \times OA$ counter-clockwise

Example 13.6 *The following data relate to the connecting rod of a reciprocating engine:*

Mass = *50 kg*
Distance between bearing centres = *900 mm*
Diameter of big end bearing = *100 mm*
Diameter of small end bearing = *80 mm*

Time of oscillation when the connecting rod is suspended from

big end = 1.7 s
small end = 1.85 s

Determine the

(i) radius of gyration k of the rod about an axis through centre of mass perpendicular to the plane of oscillation,
(ii) moment of inertia of the rod about the same axis, and
(iii) dynamically equivalent system of the connecting rod comprising two masses, one at the small end-bearing centre.

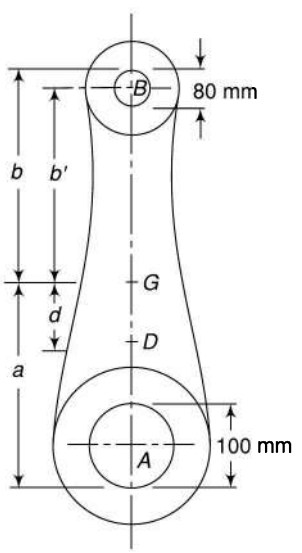

Fig. 13.10

Solution Refer Fig. 13.10.

Let L_a = length of equivalent simple pendulum when suspended from the top of the big end bearing

L_b = length of equivalent simple pendulum when suspended from the top of the small end bearing

a = distance of the centre of mass G from top of big-end bearing

b = distance of the centre of mass G from top of small-end bearing

$$t_a = 2\pi\sqrt{\frac{L_a}{g}} \quad \text{and} \quad t_b = 2\pi\sqrt{\frac{L_b}{g}}$$

or $$1.7 = 2\pi\sqrt{\frac{L_a}{g}} \quad \text{and} \quad 1.85 = 2\pi\sqrt{\frac{L_a}{9.81}}$$

or $L_a = 0.7181$ m and $L_b = 0.8505$ m

or $$a + \frac{k^2}{a} = 0.7181 \quad \text{and} \quad b + \frac{k^2}{b} = 0.8505$$

or $k^2 = 0.7181a - a^2 = 0.8505b - b^2$ (i)

But $$a + b = 900 + \frac{100}{2} + \frac{80}{2} = 990 \text{ mm} = 0.99 \text{ m}$$

$a = 0.99 - b$

$\therefore$ (i) becomes $0.7181(0.99 - b) - (0.99 - b)^2 = 0.8505b - b^2$

or $0.7109 - 0.7181b - (0.9801 + b^2 - 1.98b) = 8505b - b^2$

or $0.4115b = 0.2692$

or $b = 0.654$ m

$a = 0.99 - 0.654 = 0.336$ m

$k^2 = 0.8505 \times 0.654 - (0.654)^2 = 0.1286$

or $k = \underline{0.358 \text{ m}}$

MOI, $I = mk^2 = 50 \times (0.358)^2 = 6.4$ kg.m^2

The distance of centre of mass of the connecting rod from the centre of the small end bearing, $b' = 654 - (80/2) = 614$ mm

Let the second mass be placed at D.

Take $GD = d$ and m_d = mass at D

Then

$$d = \frac{k^2}{b'} = \frac{0.1285}{0.614} = 0.209 \text{ m}$$

$$m_d = \frac{m \times b'}{b' + d} = \frac{50 \times 0.614}{0.614 + 0.209} = 37.3 \text{ kg}$$

$$m'_b = 50 - 37.3 = \underline{12.7 \text{ kg}}$$

(m'_b = mass at the small end-bearing centre)

Example 13.7 *The following data relate to a horizontal reciprocating engine:*

Mass of reciprocating parts	= *120 kg*
Crank length	= *90 mm*
Engine speed	= *600 rpm*
Connecting rod:	
Mass	= *90 kg*
Length between centres	= *450 mm*
Distance of centre of mass from big end centre	= *180 mm*
Radius of gyration about an axis through centre of mass	= *150 mm*

Find the magnitude and the direction of the inertia torque on the crankshaft when the crank has turned 30° from the inner-dead centre.

Solution It is required to find the inertia torque, or turning moment, on the crankshaft due to the inertia of the piston as well as of the connecting rod. This can be obtained by analytical or graphical methods.

Analytical Method

$$\omega = \frac{2\pi N}{60} = \frac{2\pi \times 600}{60} = 62.8 \text{ rad/s}$$

Divide the mass of the connecting rod into two parts (Refer Fig. 13.11).

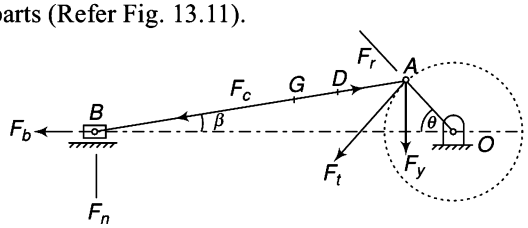

Fig. 13.11

Mass at crank pin,

$$m_a = 90 \times \left(\frac{450 - 180}{450}\right) = 54 \text{ kg}$$

Mass at gudgeon pin, $m_b = 90 - 54 = 36$ kg

Total mass of reciprocating parts, $m = 120 + 36 = 156$ kg

Acceleration of the reciprocating parts,

$$f = mr\omega^2\left(\cos\theta + \frac{\cos 2\theta}{n}\right)$$

As θ is less than 90°, it is towards the right and Thus, the inertia force is towards left.

Inertia force, $F_b = mf = mr\omega^2\left(\cos\theta + \dfrac{\cos 2\theta}{n}\right)$

$= 156 \times 0.09 \times (62.8)^2\left(\cos 30° + \dfrac{\cos 60°}{5}\right)$

$= 53\,490$ N

Inertia torque due to reciprocating parts

$T_b = Fr\left(\sin\theta + \dfrac{\sin 2\theta}{2\sqrt{n^2 - \sin^2\theta}}\right)$ [Eq. (13.21)]

$= 53\,490 \times 0.09\left(\sin 30° + \dfrac{\sin 60°}{2\sqrt{(5)^2 - \sin^2 30°}}\right)$

$= 2826$ N.m

(counter-clockwise as inertia force is towards left)

Correction couple due to assumed second mass of connecting rod at A,

$\Delta T = m\alpha_c b(l - L)$ [Eq. (13.25)]

where $b = 450 - 180 = 270$ mm

$l = 450$ mm

and $L = b + \dfrac{k^2}{b} = 270 + \dfrac{(150)^2}{270} = 353.3$ mm

$\alpha_c = -\omega^2 \sin\theta\left[\dfrac{n^2 - 1}{(n^2 - \sin^2\theta)^{3/2}}\right]$ [Eq. (13.16)]

$= -(62.8)^2 \sin 30°\left[\dfrac{5^2 - 1}{(25 - \sin^2 30°)^{3/2}}\right]$

$= -384.7$ rad/s^2

$\therefore\ \Delta T = 90 \times (-384.7) \times 0.27 \times (0.45 - 0.3533)$

$= -903.97$ N.m

The direction of the correction couple will be the same as that of angular acceleration, i.e., in the direction of the decreasing angle β as discussed in Section 13.9. Thus, it is clockwise.

$\therefore$ correction torque on the crankshaft,

$T_c = \Delta T \dfrac{\cos\theta}{\sqrt{n^2 - \sin^2\theta}}$

$= -903.97 \times \dfrac{\cos 30°}{\sqrt{25 - \sin^2 30°}}$

$= -157.4$ N.m

Correction torque is to be deducted from the inertia torque on the crankshaft or as the force F_y due to ΔT (which is clockwise) is towards left of the crankshaft, the correction torque is counter-clockwise.

Torque due to weight of mass at A,

$T_a = (m_a g)\, r \cos\theta$

$= 54 \times 9.81 \times 0.09 \times \cos 30°$

$= 41.3$ N.m counter-clockwise

$\therefore$ total inertia torque on the crankshaft

$= T_b - T_c + T_a$

$2826 - (-157.4) + 41.3$

$= \underline{3024.7 \text{ N. m}}$ counter-clockwise

Graphical Method

Draw the configuration diagram OAB of the engine mechanism to a convenient scale (Fig. 13.12) and its velocity and acceleration diagrams by Klein's construction (refer Section 13.10).

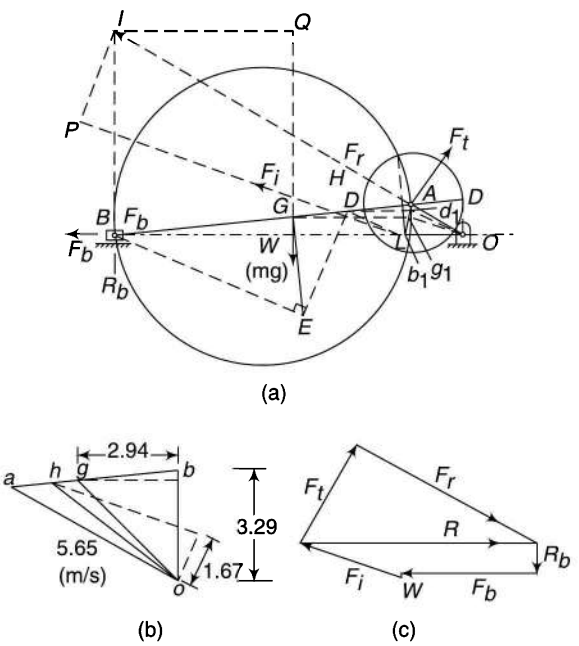

Fig. 13.12

$v_a = \omega r = 62.8 \times 0.09 = 5.65$ m/s

$f_a = \omega^2 r = (62.8)^2 \times 0.09 = 355$ m/s^2

Locate points b_1 and g_1 in the acceleration diagram to find the accelerations of points B and G. Measure b_1O and g_1O. As the length OA in the diagram

represents the acceleration of A relative to O, i.e., 355 m/s^2, therefore, f_b can be obtained from

$$f_b = 355 \times \frac{\text{length } b_1O}{\text{length } OA}$$

It is found to be $f_b = 343.2$ m/s^2

Similarly, $f_g = 345$ m/s^2

$\therefore$ $F_b = m_b \times f_b = 120 \times 343.2 = 41186$ N

$F_i = m \times f_g = 90 \times 345 = 31050$ N

Complete the diagram of Fig. 13.12(a) as discussed in Section 13.10. Taking moments about I,

$$F_t \times IA = F_b \times IB + F_i \times IP + mg \times IQ$$

$$F_t \times 515 = 41\,186 \times 300 + 31\,050 \times 152 + 90 \times 9.81 \times 268$$

$$F_t = 33615.5 \text{ N.m}$$

$$\therefore \quad T = F_t \times r = 33615.5 \times 0.9 = \underline{3025.4 \text{ N.m}}$$

Instead of taking moments about the I-centre, the principle of virtual work can also be applied to obtain the torque as follows:

On the velocity diagram [Fig. 13.12(b)], locate the points b, h and g corresponding to B, H and G respectively and take the components of velocities in the directions of forces F_b, F_i and mg. In Klein's construction, the velocity diagram in turned through 90°. Then

$$T \times \omega = F_b \times v_b + F_i \times v_h + mg \times v_g$$

$$T \times 62.8 = 41\,186 \times 3.29 + 31\,050 \times 1.67 + 90 \times 9.81 \times 2.94$$

$$T = 2157.6 + 825.7 + 41.3$$

$$= \underline{3024.6 \text{ N.m}}$$

If it is desired to find the resultant force on the crank, complete the force diagram as shown in Fig. 13.12(c).

Resultant force on the crank pin, $R = \underline{70\,000}$ N at 0°

Example 13.8 *The connecting rod of a vertical reciprocating engine is 2 m long between centres and weighs 250 kg. The mass centre is 800 mm from the big end bearing. When suspended as a pendulum from the gudgeon pin axis, it makes 8 complete oscillations in 22 seconds. Calculate the radius of gyration of the rod about an axis through its mass centre. The crank is 400 mm long and rotates at 200 rpm. Find the inertia torque exerted on the crankshaft when the crank has turned through 40° from the top dead centre and the piston is moving downwards.*

Solution

Analytical method

Divide the mass of the rod into two parts (Fig. 13.13),

Mass at the crank pin,

$$m_a = 250 \times \frac{2.0 - 0.8}{2.0} = 150 \text{ kg}$$

Mass at the gudgeon pin,

$$m_b = 250 - 150 = 100 \text{ kg}$$

$$F = mr\omega^2 \left(\cos\theta + \frac{\cos 2\theta}{n} \right)$$

$$= 100 \times 0.4 \times \left(\frac{2\pi \times 200}{60} \right)^2 \left(\cos 40° + \frac{\cos 80°}{2/0.4} \right)$$

$$= 100 \times 0.4 \times 438.6 \times 0.8$$

$$= 14\,049 \text{ N}$$

As it is a vertical engine, the weight (force) of the portion of the connecting rod at the piston pin also can be combined with this force, i.e.,

Net force = 14 049 – 100 × 9.81 = 13 068 N (upwards)

$$T_b = Fr \left(\sin\theta + \frac{\sin 2\theta}{2\sqrt{n^2 - \sin^2\theta}} \right)$$

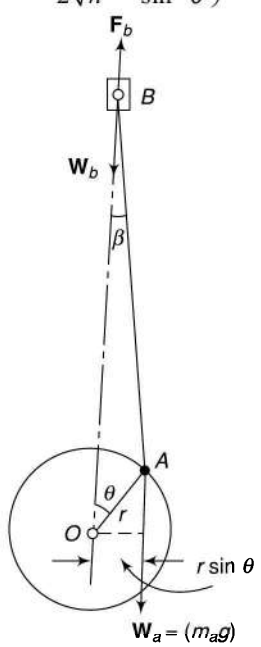

Fig. 13.13

$$= 13068 \times 0.4\left(\sin 40° + \frac{\sin 80°}{2\sqrt{25 - \sin^2 40°}}\right)$$

$= 13\,068 \times 0.4 \times 0.7421$

$= 3879.1$ N.m counter-clockwise

We have,

$$b + \frac{k^2}{b} = L$$

where $b = 2.0 - 0.8 = 1.2$ m and L can be found from

$$t = 2\pi\sqrt{\frac{L}{g}} \quad \text{or} \quad \frac{22}{8} = 2\pi\sqrt{\frac{L}{9.81}}$$

or $L = 1.88$ m

$\therefore$ $1.2 + \dfrac{k^2}{1.2} = 1.88$

or $k^2 = 0.816$

or $k = 0.903$

or radius of gyration = 903 mm

$$\alpha_c = -\omega^2 \sin\theta\left[\frac{n^2 - 1}{(n^2 - \sin^2\theta)^{3/2}}\right]$$

$$= -438.6 \sin 40°\left[\frac{25 - 1}{(25 - \sin^2 40°)^{3/2}}\right]$$

$= -55.5$ rad/s^2

$\Delta T = m\alpha_c b\,(l - L)$

$= 250 \times (-55.5) \times 1.2 \times (2.0 - 1.88)$

$= -1998$ N.m

The direction of the correction couple will be in the direction of decreasing angle β as discussed earlier. Thus, it is clockwise.

The correction torque on the crankshaft,

$$T_c = \Delta T \frac{\cos\theta}{\sqrt{n^2 - \sin^2\theta}}$$

$$= -1998 \times \frac{\cos 40°}{\sqrt{25 - \sin^2 40°}}$$

$= -308.7$ N.m

Correction torque is to be deducted from the inertia torque on the crankshaft or as the force F_y due to ΔT (which is clockwise) is towards left on the upper side of crankshaft, the correction torque is counter-clockwise.

Torque due to weight of mass at A,

$T_a = m_a g\, r \sin\theta$

$= 150 \times 9.81 \times 0.4 \sin 40°$

$= 378.3$ N.m clockwise

Total inertia torque on crankshaft $= T_b - T_c + T_a$

$= 3879.1 - (-308.7) - 378.3$

$= \underline{3809.5 \text{ N.m}}$

Graphical Method

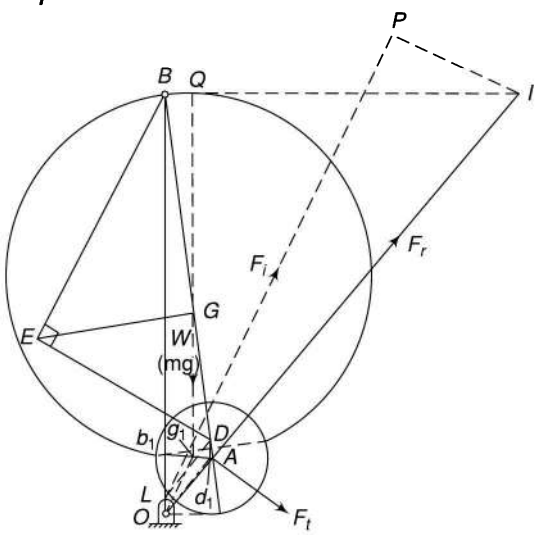

Fig. 13.14

Draw the configuration diagram OAB of the engine mechanism to a convenient scale (Fig. 13.14) and its velocity and acceleration diagrams by Klein's construction (refer Section 3.8).

$$\omega = \frac{2\pi N}{60} = \frac{2\pi \times 200}{60} = 20.94 \text{ rad/s}$$

$f_a = \omega^2 r = (20.94)^2 \times 0.4 = 175.4$ m/s^2

Complete the diagram of Fig. 13.14 as discussed in Section 13.10. Locate points b_1 and g_1 in the acceleration diagram to find the accelerations of points B and G. Measure b_1O and g_1O. As the length OA in the diagram represents the acceleration of A relative to O, i.e., 175.4 m/s^2, therefore, f_b can be obtained from

$$f_b = 175.4 \times \frac{\text{length } b_1O}{\text{length } OA}$$

It is found to be $f_b = 143.8$ m/s^2

Similarly, $f_g = 153.4$ m/s^2

However, in this problem as the mass of the reciprocating parts is not given, inertia force due to the same is not to be calculated and Thus, f_b is not required.

Now, $F_i = m \times f_g = 250 \times 153.4 = 38\,350$ N

Taking moments about I,

$$F_t \times IA = F_i \times IP - mg \times IQ$$

$$F_t \times 260.9 = 38\,350 \times 76.2 - 250 \times 9.81 \times 176$$

$$F_t = 9546 \text{ N.m}$$

$\therefore$ $T = F_t \times r = 9546 \times 0.4 =$ <u>3818 N.m</u>

$\therefore$

Example 13.9 *For Example 13.8, determine the turning moment on the crankshaft if the bore of the cylinder is 700 mm and the gas pressure is 600 kN/m². Also, consider the mass of the piston which is 120 kg.*

Solution Total reciprocating mass at B = 100 + 120 = 220 kg

Force due to reciprocating mass,

$$F = 220 \times 0.4 \times \left(\frac{2\pi \times 200}{60}\right)^2 \left(\cos 40° + \frac{\cos 80°}{2/0.4}\right)$$

$$= 220 \times 0.4 \times 438.6 \times 0.8$$

$$= 30\,877 \text{ N}$$

Net force on the piston = 30 877 – 100 × 9.81 = 29 896 N

Inertia torque

$$= 29\,896 \times 0.4 \left(\sin 40° + \frac{\sin 80°}{2\sqrt{25 - \sin^2 40°}}\right)$$

$$= 29\,896 \times 0.4 \times 0.7421$$

$$= 8874.3 \text{ N.m}$$

Net inertia torque on crankshaft

$$= 8874.3 - (-308.7) - 378.3 = 8804.7 \text{ N.m} = 8.8047$$

Now area of the cylinder bore $= \frac{\pi}{4}(0.7)^2$

$= 0.384\,85$ m²

Gas force = 0.384 85 × 600 = 230.9 kN

Turning moment = 230.9 × 0.4 × 0.7421

= 68.54 N.m

Therefore, turning moment available at the crank shaft = 68.54 – 8.8047

= <u>59.735 kN.m</u>

Example 13.10 *The piston diameter of an internal combustion engine is 125 mm and the stroke is 220 mm. The connecting rod is 4.5 times the crank length and has a mass of 50 kg. The mass of the reciprocating parts is 30 kg. The centre of mass of the connecting rod is 170 mm from the crank-pin centre and the radius of gyration about an axis through the centre of mass is 148 mm. The engine runs at 320 rpm. Find the magnitude and the direction of the inertia force and the corresponding torque on the crankshaft when the angle turned by the crank is 140° from the inner dead centre.*

Solution

Analytical Method

r = 220/2 =110 mm N = 320 rpm

d = 125 mm l = 110 × 4.5 = 495 mm

$$\omega = \frac{2\pi N}{60} = \frac{2\pi \times 320}{60} = 33.5 \text{ rad/s}$$

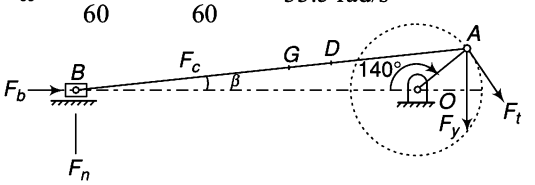

Fig. 13.15

Divide the mass of the connecting rod into two parts (refer Fig. 13.15).

Mass at crank pin, $m_a = 50 \times \left(\frac{495 - 170}{495}\right)$

= 32.83 kg

Mass at gudgeon pin, m_b = 50 – 32.83 =17.17 kg

Total mass of reciprocating parts, m = 30 + 17.17 = 47.17 kg

Acceleration of the reciprocating parts,

$$f = mr\omega^2 \left(\cos\theta + \frac{\cos 2\theta}{n}\right)$$

As θ is more than 90°, it is negative or towards left and thus, the inertia force is towards right.

Inertia force, $F_b = mf = mr\omega^2 \left(\cos\theta + \frac{\cos 2\theta}{n}\right)$

$$= 47.17 \times 0.11 \times (33.5)^2 \left(\cos 140° + \frac{\cos 280°}{4.5}\right)$$

$$= -4236 \text{ N}$$

Inertia torque due to reciprocating parts

$$T_b = Fr\left(\sin\theta + \frac{\sin 2\theta}{2\sqrt{n^2 - \sin^2\theta}}\right) \quad \text{[Eq. (13.21)]}$$

$$= -4236 \times 0.11\left(\sin 140° + \frac{\sin 280°}{2\sqrt{(4.5)^2 - \sin^2 140°}}\right)$$

$= -248$ N.m

(clockwise as inertia force is towards left)

Correction couple due to assumed second mass of connecting rod at A,

$$\Delta T = m\alpha_c b(l - L) \quad \text{[Eq. (13.25)]}$$

where $b = 495 - 170 = 325$ mm

$l = 495$ mm

and $L = b + \dfrac{k^2}{b} = 325 + \dfrac{(148)^2}{325} = 392.4$ mm

$$\alpha_c = -\omega^2 \sin\theta\left[\frac{n^2 - 1}{(n^2 - \sin^2\theta)^{3/2}}\right] \quad \text{[Eq. (13.16)]}$$

$$= -(33.5)^2 \sin 140°\left[\frac{4.5^2 - 1}{(4.5 - \sin^2 140°)^{3/2}}\right]$$

$= -157.17$ rad/s^2

$\therefore \Delta T = 50 \times (-157.17) \times 0.325 \times (0.495 - 0.3924)$

$= -262.04$ N.m

The direction of the correction couple will be the same as that of the angular acceleration, i.e., in the direction of decreasing angle β as discussed in Section 13.6. Thus, it is clockwise.

$\therefore$ correction torque on the crankshaft,

$$T_c = \Delta T \frac{\cos\vartheta}{\sqrt{n^2 - \sin^2\theta}}$$

$$= -262.04 \times \frac{\cos 140°}{\sqrt{4.5^2 - \sin^2 140°}}$$

$= 45.07$ N.m

The correction torque is to be deducted from the inertia torque on the crankshaft or as the force F_y due to ΔT (which is clockwise) is towards right of the crankshaft, the correction torque is clockwise.

Torque due to weight of mass at A,

$T_a = (m_a g)\, r \cos\theta$

$= 32.83 \times 9.81 \times 0.11 \times \cos 140°$

$= -27.14$ N.m counter-clockwise

$\therefore$ total inertia torque on the crankshaft $= T_b - T_c + T_a$

$= -248 - 45.07 - 27.14$

$= 320.2$ clockwise

Graphical Method

Draw the configuration diagram OAB of the engine mechanism to a convenient scale (Fig. 13.16) and its velocity and acceleration diagrams by Klein's construction.

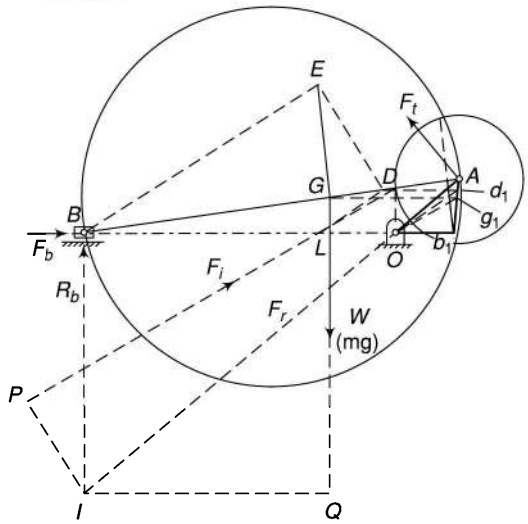

Fig. 13.16

$$\omega = \frac{2\pi N}{60} = \frac{2\pi \times 320}{60} = 33.5 \text{ rad/s}$$

$v_a = \omega r = 33.5 \times 0.11 = 3.685$ m/s

$f_a = \omega^2 r = (33.5)^2 \times 0.11 = 123.4$ m/s^2

Locate points b_1 and g_1 in the acceleration diagram to find the accelerations of points B and G. Measure b_1O and g_1O. As the length OA in the diagram represents the acceleration of A relative to O, i.e., 123.4 m/s^2, therefore, f_b can be obtained from

$$f_b = 123.4 \times \frac{b_1O}{OA}$$

It is found to be $f_b = 89.6$ m/s^2

Similarly, $f_g = 106.7$ m/s^2

$\therefore$ $F_b = m_b \times f_b = 30 \times 89.6 = 2688$ N

$F_i = m \times f_g = 50 \times 106.7 = 5335$ N

Complete the diagram of Fig. 13.16 as discussed in Section 13.10. Taking moments about I,

$F_t \times IA = F_b \times IB + F_i \times IP + mg \times IQ$

$F_t \times 0.64 = 2688 \times 0.340 + 5335 \times 0.138 + 50 \times 9.81 \times 0.322$

$F_t = 2825.1$ N

$T = F_t \times r = 2825.1 \times 0.11 = 310.7$ N.m

The difference of results by analytical and graphical methods can be due to practical error in drawing the Klein's construction and also because the equation used in analytical solution for acceleration are only approximate.

Example 13.11 *Figure 13.17(a) shows the link mechanism of a quick-return mechanism of the slotted lever type with the following dimensions:*

OA = 40 mm, OP = 20 mm, AR = 70 mm, RS = 30 mm.

The crank OA rotates at 210 rpm. The centres of mass of the links AR and RS are at their respective midpoints. The mass of the link AR is 15 kg and the radius of gyration is 265 mm about the centre of mass. The mass of the link RS is 6 kg and the radius of gyration is 90 mm about the centre of mass. The reciprocating mass is 5 kg at the slider S. Determine the torque required to be applied on the crank OP to overcome the inertia forces on the mechanism.

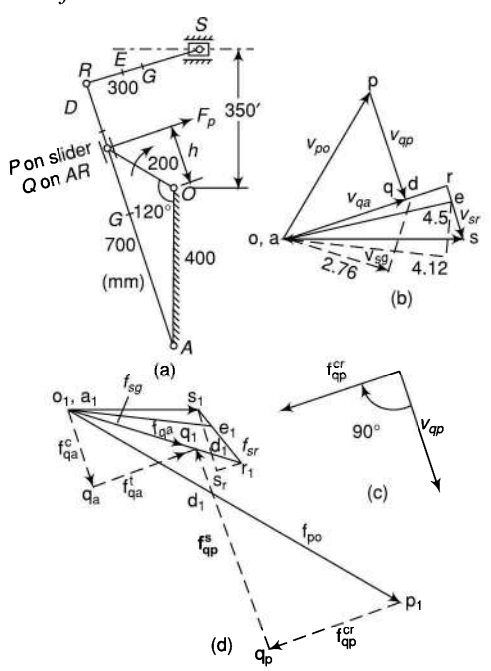

Fig. 13.17

Solution First of all, draw the configuration diagram to some suitable scale and find the dynamic equivalent masses on links *AR* and *RS*.

Link AR

$m = 15$ kg, $l = 700$ mm, $k = 265$ mm

Placing one dynamic mass at *A* and the other at *D* where *D* is located by

$$AD = AG_1 + \frac{k^2}{AG_1} = 350 + \frac{265^2}{350} = 550.6 \text{ mm}$$

Now, mass at *D* is calculated from,

$m_d \times AD = m \times GD$

or $m_d \times 550.6 = 15 \times 350$

or $m_d = 9.54$ kg and $m_a = 15 - 9.54 = 5.46$ kg

Link RS

$m = 6$ kg, $l = 300$ mm, $k = 90$ mm

Placing one dynamic mass at *S* and the other at *E* where *E* is located by

$$SE = SG' + \frac{k^2}{SG'} = 150 + \frac{90^2}{150} = 204 \text{ mm}$$

Now, mass at *E* is calculated from,

$m_e \times SE = m \times SG'$

or $m_e \times 204 = 6 \times 150$

or $m_e = 4.41$ kg and $m_s = 1.59$ kg

Total mass at *S*, $m_s = 1.59 + 5 = 6.59$ kg

Velocity and Acceleration Diagrams

Draw the velocity and acceleration diagrams as shown in Fig. 13.17. The procedure has been described in Example 3.7. Locate points **d** and **e** in the velocity diagram corresponding to points *D* and *E* respectively in the configuration diagram and in a similar way $\mathbf{d}_1$ and $\mathbf{e}_1$ in the acceleration diagram.

Acceleration of $D = \mathbf{a_1 d_1} = 36.1$ m/s^2

Inertia force of mass at $D = 9.54 \times 36.1 = 344.8$ N

Velocity of D = **ad**

Taking its components along and ⊥ to the inertia force at *D*,

Component along the force = 2.76 m/s

Work done = 344.8 × 2.76 = 952 N.m

Acceleration of $E = 36.63$ m/s^2

Inertia force of mass at $E = 4.41 \times 36.63 = 161.2$ N

Velocity of E = **oe**

Taking its components along and ⊥ to inertia force at *E*,

Component along the force = 4.12 m/s

Work done = 161.2 × 4.12 = 664 N.m
Acceleration of S = 32.8 m/s^2
Inertia force of mass at S = 6.59 × 32.8 = 216 N
Velocity of S = **os** = 4.5 m/s
Work done = 216 × 4.5 = 973 N.m
Total work done = 952 + 664 + 973 = 2589 N.m (i)

This work must be equal to the torque to be applied to the crankshaft.

Let F_p be the force applied by the slider on the link AR which is ⊥ to AR.

Velocity of E = **op**
Its components along the force = **oq** = 3.26 m/s
Work done by $F_p = (F_p \times 3.26)$ (ii)
Equating (i) and (ii),

$$F_p \times 3.26 = 2589$$

$$\therefore \quad F_p = 794 \text{ N}$$

Thus, the required torque = $F_p \times h$

h = 149.8 mm (on measurement from the configuration diagram)

T = 568 × 0.1498 = 119 N.m

13.11 TURNING-MOMENT DIAGRAMS

During one revolution of the crankshaft of a steam engine or IC engine, the torque on it varies and is given by

$$T = F_t \times r$$

$$= Fr\left(\sin\theta + \frac{\sin 2\theta}{2\sqrt{n^2 - \sin^2\theta}}\right) \qquad \text{(refer Eq. 3.21)}$$

where F is the net piston effort.

A plot of T vs. θ is known as the *turning-moment diagram*. The inertia effect of the connecting rod is, usually ignored while drawing these diagrams, but can be taken into account if desired.

As $T = F_t \times r$, a plot of F_t vs. θ (known as *crank effort diagram*) is identical to a turning-moment diagram.

The turning-moment diagrams for different types of engines are being given below:

1. Single-cylinder Double-acting Steam Engine

Figure 13.18 shows a turning-moment diagram for a single-cylinder double-acting steam engine. The crank angle θ is represented along the x-axis and the turning-moment along the y-axis. It can be observed that during the outstroke (*ogp*) the turning moment is maximum when the crank angle is a little less than 90° and zero when the crank angle is zero and 180°. A somewhat similar turning-moment diagram is obtained during the instroke (*pkg*).

Note that the area of the turning-moment diagram is proportional to the work done per revolution as the work is the product of the turning-moment and the angle turned.

The mean torque against which the engine works is given by

$$oe = \frac{\text{Area } ogpkp}{2\pi}$$

where oe is the mean torque and is the mean height of the turning-moment diagram.

When the crank turns from the angle oa to ob (Fig. 13.18), the work done by the engine is represented by the area $afghb$. But the work done against the resisting torque is represented by the area $afhb$. Thus, the engine has done more work than what has been taken from it.

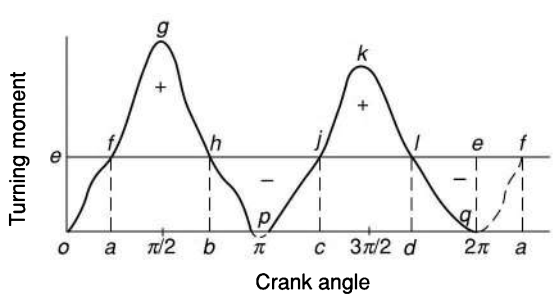

Fig. 13.18

The excess work is represented by the area *fgh*. This excess work increases the speed of the engine and is stored in the flywheel.

During the crank travel from *ob* or *oc*, the work needed for the external resistance is proportional to *bhjc* whereas the work produced by the engine is represented by the area under *hpj*. Thus, during this period, more work has been taken from the engine that is produced. The loss is made up by the flywheel which gives up some of its energy and the speed decreases during this period.

Similarly, during the period of crank travel from *oc* to *od*, excess work is again developed and is stored in the flywheel and the speed of the engine increases. During the crank travel from *od* to *oa*, the loss of work is made up by the flywheel and the speed again decreases.

The areas *fgh, hpj, jkl* and *lqf* represent fluctuations of energy of the flywheel. When the crank is at *b*, the flywheel has absorbed energy while the crank has moved from *a* to *b* and thereby, the speed of the engine is maximum. At *c*, the flywheel has given out energy while the crank has moved from *b* to *c* and thus the engine has a minimum speed. Similarly, the engine speed is again maximum at *d* and minimum at *a*. Thus, there are two maximum and two minimum speeds for the turning-moment diagram.

The greatest speed is the greater of the two maximum speeds and the least speed is the lesser of the two minimum speeds.

The difference between the greatest and the least speeds of the engine over one revolution is known as the *fluctuation of speed.*

2. Single-Cylinder Four-stroke Engine

In case of a four-stroke internal combustion engine, the diagram repeats itself after every two revolutions instead of one revolution as for a steam engine. It can be seen from the diagram (Fig. 13.19) that for the majority of the suction stroke, the turning moment is negative but becomes positive after the point *p*. During the compression stroke, it is totally negative. It is positive throughout the expansion stroke and again negative for most of the exhaust stroke.

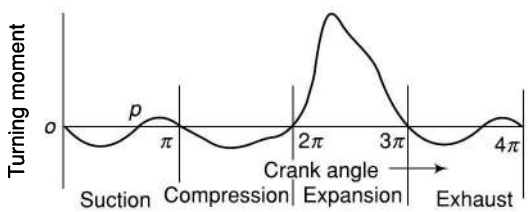

Fig. 13.19

3. Multi-Cylinder Engines

As observed in the foregoing paragraphs, the turning-moment diagram for a single-cylinder engine varies considerably and a greater variation of the same is observed in case of a four-stroke, single-cylinder engine. For engines with more than one cylinder, the total crankshaft torque at any instant is given by the sum of the torques developed by each cylinder at the instant. For example, if an engine has two cylinders with cranks at 90°, the resultant turning moment diagram has a less variation than that for a single cylinder. In a three-cylinder engine having its cranks at 120°, the variation is still less.

Figure 13.20 shows the turning-moment diagram for a multicylinder engine. The mean torque line *ab* intersects the turning moment curve at *c, d, e, f, g* and *h*. The area under the wavy curve is equal to the area *oabk*. As discussed earlier, the

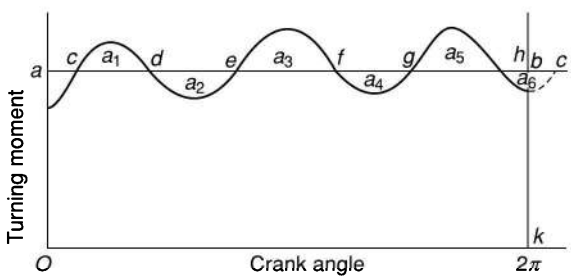

Fig. 13.20

speed of the engine will be maximum when the crank positions correspond to *d, f* and *h*, and minimum corresponding to *c, e* and *g*.

13.12 FLUCTUATION OF ENERGY

Let a_1, a_3, and a_5 be the areas in work units of the portions above the mean torque *ab* of the turning-moment diagram (Fig. 13.20). These areas represent quantities of energies added to the flywheel. Similarly, areas a_2, a_4 and a_6 below *ab* represent quantities of energies taken from the flywheel.

The energies of the flywheel corresponding to positions of the crank are as follows:

Crank position	*Flywheel energy*
c	E
d	$E + a_1$
e	$E + a_1 - a_2$
f	$E + a_1 - a_2 + a_3$
g	$E + a_1 - a_2 + a_3 - a_4$
h	$E + a_1 - a_2 + a_3 - a_4 + a_5$
c	$E + a_1 - a_2 + a_3 - a_4 + a_5 - a_6$

From the two values of the energies of the flywheel corresponding to the position *c*, it is concluded that

$$a_1 - a_2 + a_3 - a_4 + a_5 - a_6 = 0$$

The greatest of these energies is the maximum kinetic energy of the flywheel and for the corresponding crank position, the speed is *maximum.*

The least of these energies is the least kinetic energy of the flywheel and for the corresponding crank position, the speed is *minimum*.

The difference between the maximum and minimum kinetic energies of the flywheel is known as the *maximum fluctuation of energy* whereas the ratio of this maximum fluctuation of energy to the work done per cycle is defined as the *coefficient of fluctuation of energy*.

The difference between the greatest speed and the least speed is known as the *maximum fluctuation of speed* and the ratio of the maximum fluctuation of speed to the mean speed is the *coefficient of fluctuation of speed.*

13.13 FLYWHEELS

A flywheel is used to control the variations in speed during each cycle of an engine. A flywheel of suitable dimensions attached to the crankshaft, makes the moment of inertia of the rotating parts quite large and thus, acts as a reservoir of energy. During the periods when the supply of energy is more than required, it stores energy and during the periods the requirements is more than the supply, it releases energy.

Let I = moment of inertia of the flywheel

ω_1 = maximum speed

ω_2 = minimum speed

ω = mean speed

E = kinetic energy of the flywheel at mean speed

e = maximum fluctuation of energy

K = coefficient of fluctuation of speed $= \dfrac{\omega_1 - \omega_2}{\omega}$

Maximum fluctuation of energy, $e = \dfrac{1}{2} I\omega_1^2 - \dfrac{1}{2} I\omega_2^2$

$$= \frac{1}{2} I(\omega_1^2 - \omega_2^2)$$

$$= I\left(\frac{\omega_1 + \omega_2}{2}\right)(\omega_1 - \omega_2)$$

$$= I\omega\,(\omega_1 - \omega_2)$$

$$= I\omega^2\left(\frac{\omega_1 - \omega_2}{\omega}\right)$$

$$= I\omega^2 K$$

or

$$K = \frac{e}{I\omega^2} = \frac{e}{2 \times \frac{1}{2} I\omega^2} = \frac{e}{2E} \tag{13.30}$$

Example 13.12 *A flywheel with a mass of 3 kN has a radius of gyration of 1.6 m. Find the energy stored in the flywheel when its speed increases from 315 rpm to 340 rpm.*

Solution

$$\omega_1 = \frac{2\pi \times 340}{60} = 35.6 \text{ rad/s}$$

and $\omega_2 = \dfrac{2\pi \times 315}{60} = 33$ rad/s

Additional energy stored

$$= \frac{1}{2} I(\omega_1^2 - \omega_2^2) = \frac{1}{2} mk^2(\omega_1^2 - \omega_2^2)$$

$$= \frac{1}{2} \times 3000 \times 1.6^2 \times (35.6^2 - 33^2)$$

= 684 900 N.m or 684.9 kN.m

or 684.9 kJ

Example 13.13 *A flywheel absorbs 24 kJ of energy on increasing its speed of 210 rpm to 214 rpm. Determine its kinetic energy at 250 rpm.*

Solution Additional energy stored,

$$24\,000 = \frac{1}{2} I\,(\omega_1^2 - \omega_2^2)$$

$$\text{or } 24\,000 = \frac{1}{2} mk^2 \left(\frac{2\pi}{60}\right)^2 (214^2 - 210^2) \tag{i}$$

Kinetic energy at 250 rpm,

$$E = \frac{1}{2} I\omega^2 = \frac{1}{2} mk^2 . \left(\frac{2\pi}{60}\right)^2 \times 250^2 \tag{ii}$$

Dividing (ii) by (i), $\dfrac{E}{24\,000} = \dfrac{250^2}{214^2 - 210^2}$

or E = 884 430 N.m or 884.43 kN.m or 884.43 kJ

Example 13.14 *A double-acting steam engine develops 56 kW of power at 210 rpm. The maximum and minimum speeds do not vary more than 1% of the mean speed and the excess energy is 30% of the indicated work per stroke. Determine the mass of the flywheel if the radius of gyration of the flywheel is 500 mm.*

Solution Work done per second = 56 000 W = 56 000 N.m

For a double-acting engine, the number of working strokes per minute = 2 × 210 = 420

Work done /stroke

$$= \frac{\text{Work done per second}}{\text{Number of working strokes/second}}$$

$$= \frac{56\,000}{420/60} = 8000 \text{ N.m}$$

Fluctuation of energy = 8000 × 0.3 = 2400 N.m

$$K = \frac{\omega_1 - \omega_2}{\omega} = \frac{1.01\omega - 0.99\omega}{\omega} = 0.02$$

Also, $K = \dfrac{e}{I\omega^2} = \dfrac{e}{mk^2\omega^2}$

or $0.02 = \dfrac{2400}{m \times 0.5^2 \times 22^2}$

or $m = 992$ kg

Example 13.15 *A flywheel fitted to a steam engine has a mass of 800 kg. Its radius of gyration is 360 mm. The starting torque of the engine is 580 N.m and may be assumed constant. Find the kinetic energy of the flywheel after 12 seconds.*

Solution Angular acceleration,

$$\alpha = \frac{T}{I} = \frac{T}{mk^2} = \frac{580}{800 \times 0.36^2} = 5.59 \text{ rad/s}^2$$

$$\omega_2 = \omega_1 + \alpha t = 0 + 5.59 \times 12 = 67.08 \text{ rad/s}$$

Kinetic energy

$$= \frac{1}{2} I\omega^2 = \frac{1}{2} mk^2\omega^2 = \frac{1}{2} \times 800 \times 0.36^2 \times 67.08^2$$

= 233 270 N.m or 233.27 kJ

Example 13.16 *The turning-moment diagram for a petrol engine is drawn to a vertical scale of 1 mm = 500 N.m and a horizontal scale of 1mm = 3°. The turning-moment diagram repeats itself after every half revolution of the crankshaft. The areas above and below the mean torque line are 260, –580, 80, –380, 870, and –250 mm². The rotating parts have a mass of 55 kg and radius of gyration of 2.1 m. If the engine speed is 1600 rpm, determine the coefficient of fluctuation of speed.*

Solution Let flywheel KE at $a = E$

(refer Fig. 13.21)

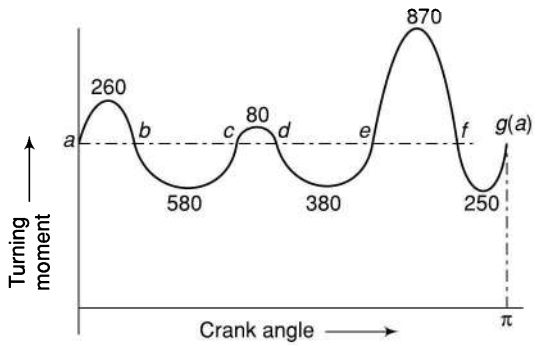

Fig. 13.21

at $b = E + 260$

at $c = E + 260 - 580 = E - 320$

at $d = E - 320 + 80 = E - 240$

at $e = E - 240 - 380 = E - 620$

at $f = E - 620 + 870 = E + 250$

at $g = E + 250 - 250 = E$

Maximum energy = $E + 260$ (at b)

Minimum energy = $E - 620$ (at e)

Maximum fluctuation of energy,

$e_{max} = (E + 260) - (E - 620) \times$ Hor. scale × Vert. scale

$$= 880 \times \left(3 \times \frac{\pi}{180}\right) \times 500$$

= 23 038 N.m

$$K = \frac{e}{I\omega^2} = \frac{e}{mk^2\omega^2} = \frac{23\,038}{55 \times 2.1^2 \times \left(\frac{2\pi \times 1600}{60}\right)^2}$$

$K = 0.0034$ or 0.34%

Example 13.17 *A three–cylinder single-acting engine has its cranks at 120°. The turning-moment diagram for each cycle is a triangle for the power stroke with a maximum torque of 60 N.m at 60° after the dead centre of the corresponding crank. There is no torque on the return stroke. The engine runs at 400 rpm. Determine the*

(i) power developed

(ii) coefficient of fluctuation of speed if the mass of the flywheel is 10 kg and radius of gyration is 88 mm
(iii) coefficient of fluctuation of energy
(iv) maximum angular acceleration of flywheel

Solution The turning-moment diagram for each cylinder is shown in Fig. 13.22(a) and the resultant-turning moment diagram for the three combined cylinders is shown in Fig. 13.22(b).

(i) Work done/cycle = Area of three triangles
$= 3 \times (60 \times \pi/2) = 90\pi$

$$\text{Mean torque} = \frac{\text{Work done /cycle}}{\text{Angle turned}} = \frac{90\pi}{2\pi} = 45 \text{ N.m}$$

$$P = T\omega = 45 \times \frac{2\pi \times 400}{60} = 1885 \text{ W}$$

or <u>1.885 kW</u>

(ii) As the area above or below the mean torque line is the maximum fluctuation of energy,

$$\therefore \quad e_{max} = \frac{60 \times \pi}{180} \times (60 - 45) \times \frac{1}{2}$$

$= 2.5\pi$ N.m

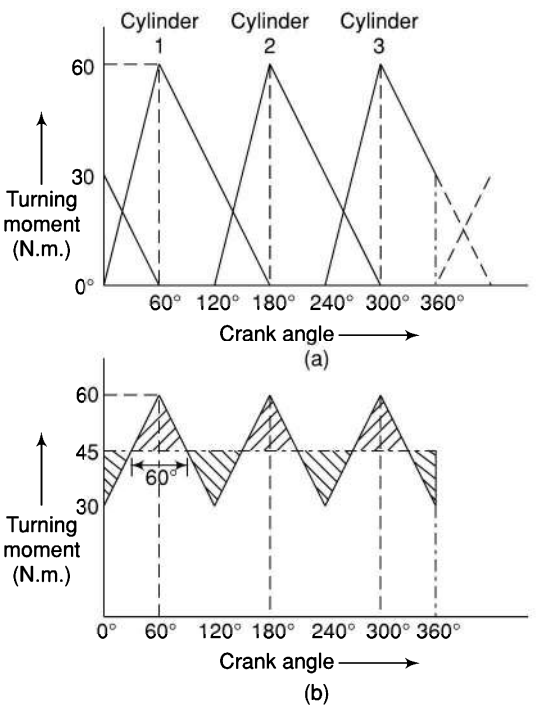

Fig. 13.22

$$K = \frac{e}{I\omega^2} = \frac{e}{mk^2\omega^2}$$

$$= \frac{2.5\pi}{10 \times 0.088^2 \left(\frac{2\pi \times 400}{60}\right)^2}$$

$= 0.0578$ or <u>5.78%</u>

(iii) Coefficient of fluctuation of energy,

$$K_e = \frac{\text{Maximum fluctuation of energy}}{\text{work done/cycle}}$$

$$= \frac{2.5\pi}{90\pi}$$

$= \underline{0.0278}$

(iv) Maximum fluctuation of torque
$= 60 - 45 = 15$ N.m

$\therefore \quad \Delta T = 15$ N.m

or $\quad I\alpha = mk^2\,\alpha = 15$

or $\quad 10 \times (0.088)^2 \times \alpha = 15$

or $\quad \alpha = 193.7$ rad/s^2

Example 13.18 *In a single-acting four-stroke engine, the work done by the gases during the expansion stroke is three times the work done during the compression stroke. The work done during the suction and exhaust strokes is negligible. The engine develops 14 kW at 280 rpm. The fluctuation of speed is limited to 1.5% of the mean speed on either side. The turning-moment diagram during the compression and the expansion strokes may be assumed to be triangular in shape. Determine the inertia of the flywheel.*

Solution

$P = 14$ kW, $N = 280$ rpm, $K = 1.5\%$,

$$\omega = \frac{2\pi N}{60} = \frac{2\pi \times 280}{60} = 29.32 \text{ rad/s}$$

It is a four-stroke engine, Thus, a cycle is completed in 4π radians. Thus the number of working strokes per minute is half the rpm, i.e., 140. The turning-moment diagram is shown in Fig. 13.23.

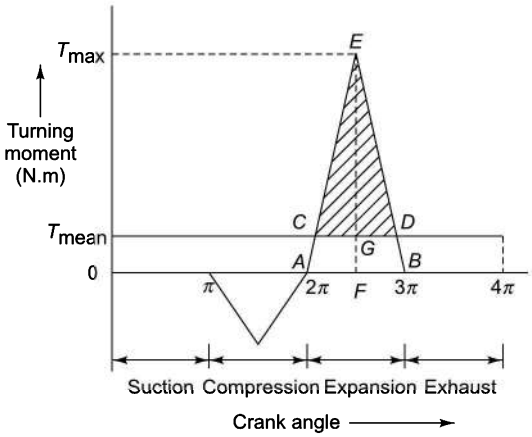

Fig. 13.23

Net energy produced/s = 14 000 N.m

Net energy produced/minute = 14 000 × 60 N.m

$$\text{Net energy produced/cycle} = \frac{14\,000 \times 60}{140}$$

$$= 6\,000 \text{ N.m}$$

Now, during the compression stroke, the energy is absorbed whereas during the expansion stroke, it is produced.

Thus if E is the energy produced during the expansion stroke,

$$\text{Then } E - \frac{E}{3} = 6000 \quad \text{or} \quad E = 9000 \text{ N.m}$$

$$\text{Also } \frac{T_{max} \times \pi}{2} = 9000 \quad \text{or} \quad T_{max} = 5730 \text{ N.m}$$

and $T_{mean} \times 4\pi = 6000$; $\therefore$ $T_{mean} = 477.5$ N.m

In triangle ABE,

$$\frac{CD}{AB} = \frac{EG}{EF} = \frac{5730 - 477.5}{5730} = \frac{5252.5}{5730}$$

$$= 0.9167$$

or $CD = 0.9167 \times \pi = 2.88$ rad

and maximum fluctuation of energy,

$$e = \text{Area } CDE = \frac{CD \times EG}{2} = \frac{2.88 \times 5252.5}{2}$$

$$= 7564 \text{ N.m}$$

$$K = \frac{e}{I\omega^2} \text{ or } 0.03 = \frac{7564}{I \times 29.32^2} \text{ or } I = 293.3 \text{ kg.m}^2$$

Example 13.19 *The turning-moment diagram of a four-stroke engine is assumed to be represented by four triangles, the areas of which from the line of zero pressure are*

Suction stroke = *440 mm²*
Compression stroke = *1600 mm²*
Expansion stroke = *7200 mm²*
Exhaust stroke = *660 mm²*

Each mm² of area represents 3 N.m of energy. If the resisting torque is uniform, determine the mass of the rim of a flywheel to keep the speed between 218 and 222 rpm when the mean radius of the rim is to be 1.25 m.

Solution It is a four-stroke engine, Thus, a cycle is completed in 4π radians. The turning moment diagram is shown in Fig. 13.24.

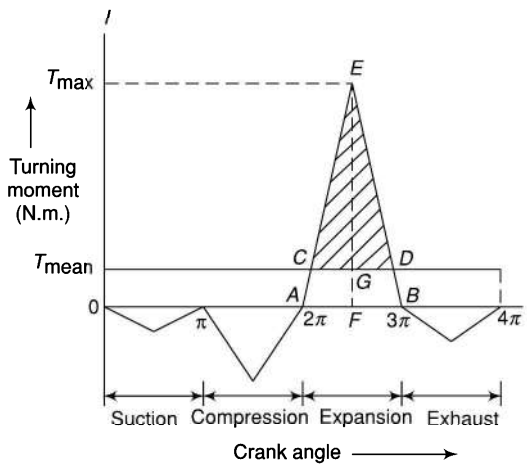

Fig. 13.24

The energy is produced only in the expansion stroke whereas in the other three strokes, it is spent only.

Net energy produced in one cycle

= [7200 – (440 + 1600 + 660)] × 3

= 13 500 N.m

Also $T_{mean} \times 4\pi$ = 13 500

or T_{mean} = 1074 N.m

Energy produced during expansion stroke = Area × Energy/mm² = 7200 × 3 = 21 600 N.m

As the area of the turning-moment diagram during the expansion stroke indicates the energy produced during the expansion stroke,

$$\therefore \quad \frac{T_{max} \times \pi}{2} = 21\ 600$$

or $\quad T_{max} = 13\ 751$ N.m

In triangle *ABE*,

$$\frac{CD}{AB} = \frac{EG}{EF} = \frac{13\ 751 - 1074}{13\ 751} = \frac{12\ 677}{13\ 751}$$

$$= 0.9219$$

or $\quad CD = 0.9219 \times \pi = 2.896$ rad

and maximum fluctuation of energy,

$$e = \text{Area } CDE = \frac{CD \times EG}{2} = \frac{2.896 \times 12\ 677}{2}$$

$$= 18\ 356 \text{ N.m}$$

$$\text{Now, } e = \frac{1}{2} I (\omega_1^2 - \omega_2^2)$$

$$18\ 356 = \frac{1}{2} mk^2 (\omega_1^2 - \omega_2^2)$$

$$= \frac{1}{2} \times m \times 1.25^2 \left[\left(\frac{2\pi}{60} \right)^2 (222^2 - 218^2) \right]$$

$$= 15.0786 \text{ m}$$

$$m = \underline{1217.4 \text{ kg}}$$

Example 13.20 *The torque delivered by a two-stroke engine is represented by $T = (1000 + 300 \sin 2\theta - 500 \cos 2\theta)$ N.m where θ is the angle turned by the crank from the inner-dead centre. The engine speed is 250 rpm. The mass of the flywheel is 400 kg and radius of gyration 400 mm. Determine the*

(i) power developed
(ii) total percentage fluctuation of speed
(iii) angular acceleration of flywheel when the crank has rotated through an angle of 60° from the inner-dead centre
(iv) maximum angular acceleration and retardation of the flywheel

Solution For the expression for torque being a function of 2θ, the cycle is repeated every 180° of the crank rotation (Fig. 13.25).

(i) $$T_{mean} = \frac{1}{\pi} \int_0^{\pi} T d\theta$$

$$= \frac{1}{\pi} \int_0^{\pi} (1000 + 300 \sin 2\theta - 500 \cos 2\theta)\, d\theta$$

$$= \frac{1}{\pi} \left[1000\theta - \frac{300}{2} \cos 2\theta - \frac{500}{2} \sin 2\theta \right]_0^{\pi}$$

$$= \frac{1}{\pi} [(1000\pi - 150 - 0) - (0 - 150 - 0)]$$

$$= 1000 \text{ N.m}$$

$$P = T\omega = 1000 \times \frac{2\pi \times 250}{60} = 26\ 180 \text{ W}$$

or <u>26.18 kW</u>

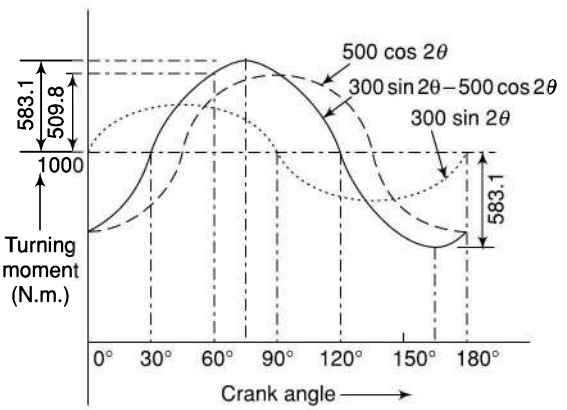

Fig. 13.25

(ii) At any instant, $\Delta T = T - T_{mean}$

$= (1000 + 300 \sin 2\theta - 500 \cos 2\theta) - 1000$

$= 300 \sin 2\theta - 500 \cos 2\theta$

ΔT is zero, when $300 \sin 2\theta - 500 \cos 2\theta = 0$

or $\quad 300 \sin 2\theta = 500 \cos 2\theta$

or $\quad \tan 2\theta = \frac{5}{3}$

or $\quad 2\theta = 59°$ or $239°$

$\theta = 29.5°$ or $119.5°$

$$e_{max} = \int_{29.5°}^{119.5°} \Delta T d\theta$$

$$= \int_{29.5°}^{119.5°} (300 \sin 2\theta - 500 \cos 2\theta)\, \theta$$

$$= [-150\cos 2\theta - 250\sin 2\theta]_{29.5°}^{119.5°}$$

$$= 583.1 \text{ N.m}$$

$$K = \frac{e}{mk^2\omega^2}$$

$$= \frac{583.1}{400 \times (0.4)^2 \times \left(\frac{2\pi \times 250}{60}\right)^2}$$

$$= 0.013\,29 \quad \text{or} \quad 1.329\%$$

(iii) Acceleration or deceleration is produced by excess or deficit torque than the mean value at any instant.

$$\Delta T = 300\sin 2\theta - 500\cos 2\theta$$

when $\theta = 60°$,

$$\Delta T = 259.8 - (-250) = 509.8 \text{ N.m}$$

or $I\alpha = mk^2\,\alpha = 509.8$

or $400 \times (0.4)^2 \times \alpha = 509.8$

or $\alpha = 7.966$ rad/s^2

(iv) For ΔT_{max} and ΔT_{min},

$$\frac{d}{d\theta}(\Delta T) = \frac{d}{d\theta}(300\sin 2\theta - 500\cos 2\theta) = 0$$

or $2 \times 300\cos 2\theta + 2 \times 500\sin 2\theta = 0$

or $600\cos 2\theta = -1000\sin 2\theta$

or $\tan 2\theta = -0.6$

or $2\theta = 149.04°$ and $329.04°$

or $\theta = 74.52°$ and $164.52°$

when $2\theta = 149.04°$, $T = 1583.1$ N.m,

$\Delta T = 583.1$ N.m

when $2\theta = 329.04°$, $T = 416.9$ N.m,

$\Delta T = -583.1$ N.m

As values of ΔT at maximum and minimum torque T are same, maximum acceleration is equal to maximum retardation.

or $\Delta T = mk^2\alpha = 583.1$

or $400 \times (0.4)^2 \times \alpha = 583.1$

Maximum acceleration or retardation, $\alpha = 9.11$ rad/s^2

Example 13.21 *A machine is coupled to a two-stroke engine which produces a torque of (800 +180 sin 3θ) N.m, where θ is the crank angle. The mean engine speed is 400 rpm. The flywheel and the other rotating parts attached to the engine have a mass of 350 kg at a radius of gyration of 220 mm. Calculate the*

(i) power of the engine

(ii) total fluctuation of speed of the flywheel when the

(a) resisting torque is constant

(b) resisting torque is (800 + 80 sin θ) N.m

Solution

$m = 350$ kg $\qquad N = 400$ rpm

$k = 220$ mm $\qquad \omega = \dfrac{2\pi \times 400}{60} = 41.89$ rad/s

For the expression for torque being a function of 3θ, the cycle is repeated after every 120° of the crank rotation (Fig. 13.26).

(i) $$T_{mean} = \frac{1}{2\pi/3}\int_0^{2\pi/3} T\,d\theta$$

$$= \frac{3}{2\pi}\int_0^{2\pi/3} (800 + 180\sin 3\theta)\,d\theta$$

$$= \frac{3}{2\pi}\left[800\theta - \frac{180}{3}\cos 3\theta\right]_0^{2\pi/3}$$

$$= 800 \text{ N.m}$$

$$P = T\omega = 800 \times 41.89 = 33\,512 \text{ W}$$

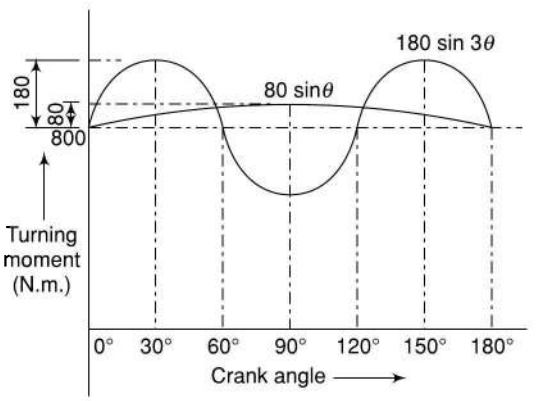

Fig. 13.26

(ii) (a) At any instant, $\Delta T = T - T_{mean}$

$= 800 + 180\sin 3\theta - 800$

$= 180\sin 3\theta$

ΔT is zero when $180 \sin 3\theta = 0$

or when $\sin 3\theta = 0$

or $3\theta = 0°$ or $180°$

or $\theta = 0°$ or $60°$

$$e_{max} = \int_{0°}^{60°} \Delta T dt$$

$$= \int_{0°}^{60°} (180 \sin 3\theta)\, d\theta$$

$$= \left[\frac{180 \cos 3\theta}{3}\right]_{0°}^{60°}$$

$= 120$ N.m

$$K = \frac{e}{mk^2\omega^2} = \frac{120}{350 \times (0.22)^2 \times (41.89)^2}$$

$= 0.00404$ or $\underline{0.404\%}$

(b) $\Delta T = T$ of engine $- T$ of machine

$= (800 + 180 \sin 3\theta) - (800 + 80 \sin\theta)$

$= 180 \sin 3\theta - 80 \sin \theta$

ΔT is zero when $180 \sin 3\theta - 80 \sin \theta = 0$

or $180 \sin 3\theta = 80 \sin \theta$

or $180 (3 \sin \theta - 4 \sin^3 \theta) = 80 \sin \theta$

or $3 - 4 \sin^2 \theta = \dfrac{80}{100} = 0.4444$

or $\sin^2\theta = 0.639$

or $\sin \theta = \pm 0.799$

or $\theta = \pm 53°$ and $\pm 127°$

$$e_{max} = \int_{53°}^{127°} \Delta T d\theta = \int_{53°}^{127°} (180 \sin 3\theta - 80 \sin \theta)\, d\theta$$

$$= \left[-\frac{180 \cos 3\theta}{3} + 80 \cos \theta\right]_{53°}^{127°}$$

$= -60 \cos 381° + 80 \cos 127° + 60 \cos 159° - 80 \cos 53°$

$= -208.3$ N.m

$$K = \frac{e}{mk^2\omega^2} = \frac{208.3}{350 \times (0.22)^2 \times (41.89)^2} = 0.007$$

$= \underline{0.7\%}$

Example 13.22 *The torque delivered by a two-stroke engine is represented by $T = (1200 + 1400 \sin\theta + 210 \sin 2\theta + 21 \sin 3\theta)$ N.m where θ is the angle turned by the crank from the inner-dead centre. The engine speed is 210 rpm. Determine the power of the engine and the minimum mass of the flywheel if its radius of gyration is 800 mm and the maximum fluctuation of speed is to be ± 1.5% of the mean.*

Solution

$k = 800$ mm $\qquad N = 210$ rpm

$K = 0.015 + 0.015 = 0.03$

The expression for torque being a function of θ, 2θ and 3θ the cycle is repeated after every 360° of the crank rotation (Fig. 13.27).

(i) $$T_{mean} = \frac{1}{\pi}\int_0^{\pi} T d\theta$$

$$= \frac{1}{2\pi}\int_0^{2\pi} (1200 + 1400 \sin\theta + 210 \sin 2\theta + 21 \sin 3\theta)\, d\theta$$

$$= \frac{1}{2\pi}\left[1200\theta + 1400 \cos\theta + \frac{210}{2}\cos 2\theta + \frac{21}{2}\cos 3\theta\right]_0^{2\pi}$$

$$= \frac{1}{2\pi}[(2400\pi + 1400 + 105 + 10.5) - (0 + 1400 + 105 + 10.5)]$$

$= 1200$ N.m

$$P = T\omega = 1200 \times \frac{2\pi \times 210}{60} = 26\,390 \text{ W}$$

or $\underline{26.39 \text{ kW}}$

(ii) At any instant, $\Delta T = T - T_{mean}$

$= (1200 + 1400 \sin\theta - 210 \sin 2\theta + 21 \sin 3\theta) - 1200$

$= 1400 \sin\theta + 210 \sin 2\theta + 21 \sin 3\theta$

ΔT is zero when

$1400 \sin\theta + 210 \sin 2\theta + 21 \sin 3\theta = 0$

This will be so when θ is 180° or 360°. This can be easily seen from the plot of the turning moment diagram.

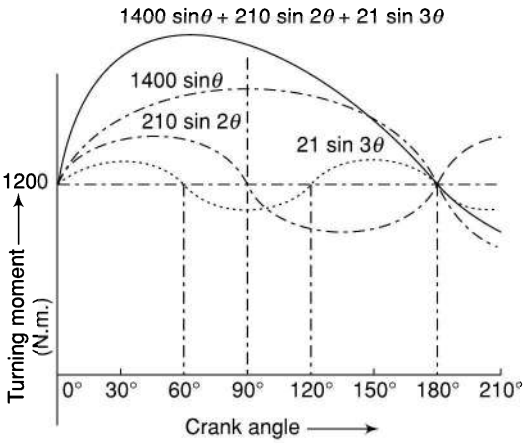

Fig. 13.27

$$e_{\max} = \int_0^{\pi} \Delta T dt = \int_0^{\pi} (1200 + 1400 \sin\theta + 210 \sin 2\theta + 21 \sin 3\theta)\, d\theta$$

$$= \left[1400 \cos\theta + \frac{210}{2}\cos 2\theta + \frac{21}{2}\cos 3\theta\right]_0^{\pi}$$

$$= [(-1400 + 105 - 10.5) - (1400 + 105 + 10.5)]$$

$$= 2821 \text{ N.m}$$

Now, $K = \dfrac{e}{mk^2\omega^2}$

$$0.03 = \frac{2821}{m \times (0.8)^2 \times \left(\dfrac{2\pi \times 210}{60}\right)^2}$$

$$0.03 = \frac{2821}{\mu \times 3.095}$$

$$m = \underline{303.8 \text{ kg}}$$

Example 13.23 *In a machine, the intermittent operations demand the torque to be applied as follows:*

- *During the first half-revolution, the torque increases uniformly from 800 N.m to 3000 N.m*
- *During the next one revolution, the torque remains constant*
- *During the next one revolution, the torque decreases uniformly from 3000 N.m to 800 N.m*
- *During last half-revolution, the torque remains constant.*

Thus, a cycle is completed in 4 revolutions. The motor to which the machine is coupled exerts a constant torque at a mean speed of 250 rpm. A flywheel of mass 1800 kg and radius of gyration of 500 mm is fitted to the shaft. Determine the

(i) power of the motor

(ii) total fluctuation of speed of the machine shaft

Solution

$m = 1800$ kg $\qquad N = 250$ rpm

$k = 500$ mm

(a) Refer Fig. 13.28.

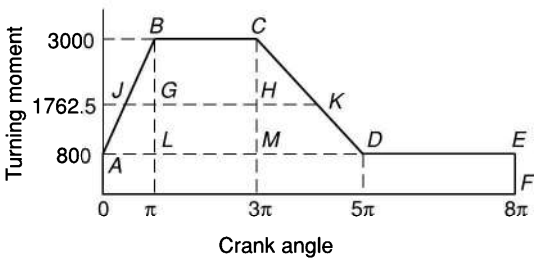

Fig. 13.28

Torque for one complete cycle, T = area $OABCDEF$

or T = Area $OAEF$ + Area ABL + Area $LBCM$ + Area MCD

$$= 8\pi \times 800 + \frac{\pi \times 2200}{2} + 2\pi \times 2200 + \frac{2\pi \times 2200}{2}$$

$$= 14\,100\pi \text{ N.m}$$

$$T_{\text{mean}} = \frac{14\,100\pi}{8\pi} = 1762.5 \text{ N.m}$$

$$P = T_m\omega = 1762.5 \times \frac{2\pi \times 250}{60} = 46\,142 \text{ W}$$

or $\underline{46.143 \text{ kW}}$

(ii) $JG = AL \times \dfrac{BG}{BL} = \pi \times \dfrac{3000 - 1762.5}{3000 - 800}$

$$= 1.767$$

$$HK = MD \times \frac{CH}{CM} = 2\pi \times \frac{3000 - 1762.5}{3000 - 800}$$

$$= 3.534$$

The fluctuation of energy is equal to the area above the mean torque line.

e = Area $JBCK$ = area JBG + area $GBCH$ + area HCK

$$= (3000 - 1762.5)\left[\frac{1.767}{2} + 2\pi + \frac{3.534}{2}\right]$$

$= 11\ 055$ N.m

$$K = \frac{e}{mk^2\omega^2}$$

$$= \frac{11\ 055}{1800 \times (0.5)^2 \times \left(\frac{2\pi \times 250}{60}\right)^2}$$

$= 0.0358$ or <u>3.58%</u>

13.14 DIMENSIONS OF FLYWHEEL RIMS

The inertia of a flywheel is provided by the hub, spokes and the rim. However, as the inertia due to the hub and the spokes is very small, usually it is ignored. In case it is known, it can be taken into account.

Consider a rim of the flywheel as shown in Fig. 13.29.

Let ω = angular velocity

r = mean radius

t = thickness of the rim

ρ = density of the material of the rim

Consider an element of the rim,

Centrifugal force on the element/unit length = $[\rho(r.d\theta)t].r\omega^2$

Total vertical force/unit length

$$= \int_0^{\pi} \rho.r^2.d\theta.t.\omega^2 \sin\theta = \rho.r^2.t.\omega^2 \int_0^{\pi} \sin\theta.d\theta$$

$$= \rho.r^2.t.\omega^2(-\cos\theta)\ {}_0^{\pi} = 2\rho.r^2.t.\omega^2$$

Let σ = circumferential stress induced in the rim

(Circumferential stress is also known as *hoop stress.*)

Then for equilibrium, $\sigma(2t).1 = 2\rho.r^2.t.\omega^2$

$$\sigma = \rho.r^2\omega^2 = \rho.v^2 \qquad (13.31)$$

The above relation provides the limiting tangential velocity at the mean radius of the rim of the flywheel. Then the diameter can be calculated from the relation,

$$v = \pi dN/60.$$

Also, mass = density × volume = density × circumference × cross-sectional area

or $\quad m = \rho.\pi d.b.t \qquad (13.32)$

The relation can be used to find the width and the thickness of the rim.

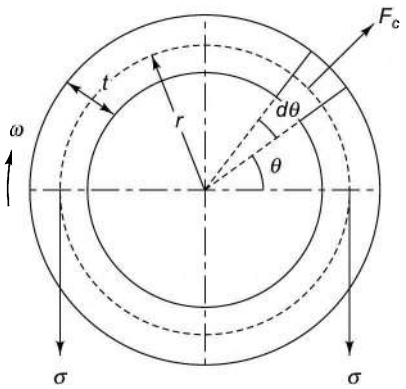

Fig. 13.29

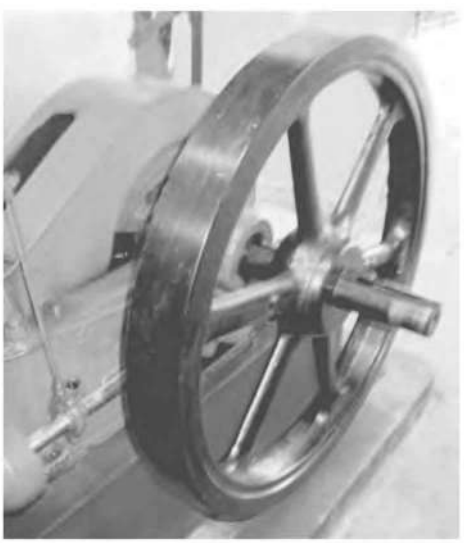

Flywheel of a diesel engine

Example 13.24 *The turning-moment diagram for a multicylinder engine has been drawn to a vertical scale of 1 mm = 650 N.m and a horizontal scale*

of 1 mm = 4.5°. The areas above and below the mean torque line are –28, + 380, –260, + 310, –300, +242, –380, +265 and –229 mm².

The fluctuation of speed is limited to ± 1.8% of the mean speed which is 400 rpm. The density of the rim material is 7000 kg/m³ and width of the rim is 4.5 times its thickness. The centrifugal stress (hoop stress) in the rim material is limited to 6 N/mm². Neglecting the effect of the boss and arms, determine the diameter and cross section of the flywheel rim.

Solution

$\rho = 7000$ kg/m³ $\quad \sigma = 6 \times 10^6$ N/m²

$N = 400$ rpm $\quad K = 0.018 + 0.018 = 0.036$

$b = 4.5t$

Now,

$$\sigma = \rho v^2 \qquad \text{(Eq. 13.31)}$$

$$6 \times 10^6 = 7000 \times v^2$$

$$v = 29.28 \text{ m/s}$$

or $$\frac{\pi dn}{60} = \frac{\pi \times d \times 400}{60} = 29.28$$

or $d = 1.398$ m

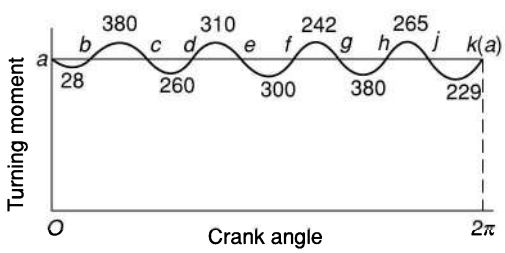

Fig. 13.30

Refer the turning-moment diagram of Fig. 13.30,

Let the flywheel KE at $a = E$

at $b = E - 28$

at $c = E - 28 + 380 = E + 352$

at $d = E + 352 - 260 = E + 92$

at $e = E + 92 + 310 = E + 402$

at $f = E + 402 - 300 = E + 102$

at $g = E + 102 + 242 = E + 344$

at $h = E + 344 - 380 = E - 36$

at $j = E - 36 + 265 = E + 229$

at $k = E + 229 - 229 = E$

Maximum energy = $E + 402$ (at e)

Minimum energy = $E - 36$ (at h)

Maximum fluctuation of energy,

$$e_{max} = (E + 402) - (E - 36) \times \text{hor. scale} \times \text{vert. scale}$$

$$= 438 \times \left(4.5 \times \frac{\pi}{180}\right) \times 650$$

$$= 22\,360 \text{ N.m}$$

$$K = \frac{e}{I\omega^2} = \frac{e}{mk^2\omega^2}$$

$$0.036 = \frac{22\,360}{m\left(\frac{1.398}{2}\right)^2\left(\frac{2\pi \times 400}{60}\right)^2}$$

$m = 724.5$ kg

or density × volume = 724.5

or $\rho \times (\pi d) \times t \times 4.5t = 724.5$

or $7000 \times \pi \times 1.398 \times t \times 4.5t = 724.5$

or $t = 0.0512$ m or 51.2 mm

$b = 4.5 \times 51.2 = 230.3$ mm

Example 13.25 *The speed variation of an Otto cycle engine during the power stroke is limited to 0.8% of the mean speed on either side. The engine develops 40 kW of power at a speed of 130 rpm with 65 explosions per minute. The work done during the power stroke is 1.5 times the work done during the cycle. If the hoop stress in the rim of the flywheel is not to exceed 3.5 MPa and the width is three times the thickness, determine the mean diameter and the cross section of the rim. Assume that the energy stored by the flywheel is 1.1 times the energy stored by the rim and the density of the rim material is 7300 kg/m³. The turning-moment diagram during the expansion stroke may be assumed to be triangular in shape.*

Solution As the number of explosions are half the speed of the engine, it is a four-stroke engine and the cycle is completed in 4π radians. The turning-moment diagram is shown in Fig. 13.31.

$$P = \frac{2\pi NT}{60} \text{ or } 40\,000 = \frac{2\pi \times 130 \times T_{mean}}{60}$$

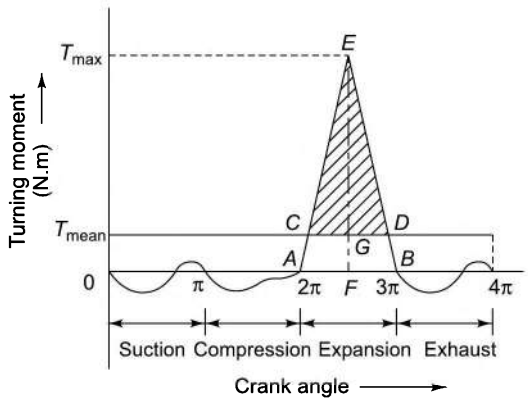

Fig. 13.31

or T_{mean} = 2938.2 N.m

or Energy produced per cycle = 2938.2 × 4π = 36 923 N.m

Energy produced during expansion stroke = 36 923 × 1.5 = 55 385 N.m

The work done or the energy produced during the power stroke $= \dfrac{T_{max} \times \pi}{2} = 55\,385$

or T_{max} = 35 259 N.m

In triangle *ABE*

$$\frac{CD}{AB} = \frac{EG}{EF} = \frac{35\,259 - 2938.2}{35\,259}$$

$$= \frac{32\,320.8}{35\,259} = 0.9167$$

or $CD = 0.9167 \times \pi = 2.88$ rad

and maximum fluctuation of energy,

$$e = \text{Area } CDE = \frac{CD \times EG}{2} = \frac{2.88 \times 32\,320.8}{2}$$

= 46 542 N.m

From strength considerations, the hoop stress,

$\sigma = \rho v^2$ or $3.5 \times 10^6 = 7000 \times v^2$ or $v = 22.36$ m/s

or $\dfrac{\pi dN}{60} = \dfrac{\pi \times d \times 130}{60} = 22.36$

or $d = 3.285$ m

Energy stored in the rim = 46 542/1.1

= 42 311 N.m

Now, $K = \dfrac{e}{I\omega^2} = \dfrac{e}{mk^2\omega^2}$ or 0.016

$$= \frac{42\,311}{m\left(\frac{3.285}{2}\right)^2\left(\frac{2\pi \times 130}{60}\right)^2} \text{ or } m = 5289 \text{ kg}$$

or density × volume = 5289

or $\rho \times (\pi d) \times t \times 4.5t = 5289$

or $7300 \times \pi \times 3.285 \times t \times 3t = 5289$

or $t = 0.153$ m or 153 mm

and $b = 3 \times 153 = 459$ mm

13.15 PUNCHING PRESSES

From the previous discussion, it can be observed that when the load on the crankshaft is constant or varies and the input torque varies continuously during a cycle, a flywheel is used to reduce the fluctuations of speed. A flywheel can perform the same purpose in a punching press or a riveting machine in which

the torque available is constant but the load varies during the cycle. Figure 13.32 shows the sketch of a punching press. It is a slider-crank mechanism in which a punch replaces the slider. A motor provides a constant torque to the crankshaft through a flywheel. It may be observed that the actual punching process is performed only during the downward stroke of the punch and that also for a limiting period when the punch travels through the thickness of the plate. Thus, the load is applied during the actual punching process only and during the rest of the downward stroke and the return stroke, there is no load on the crankshaft. In the absence of a flywheel, the decrease in the speed of the crankshaft will be very large during the actual punching period whereas it will increase to a much higher value during the no-load period as the motor will continue to supply the energy all the time.

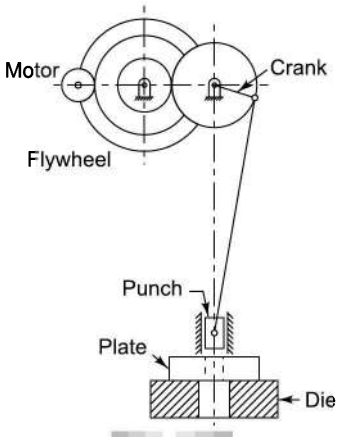

Fig. 13.32

Example 13.26 *A riveting machine is driven by a motor of 3 kW. The actual time to complete one riveting operation is 1.5 seconds and it absorbs 12 kN.m of energy. The moving parts including the flywheel are equivalent to 220 kg at 0.5 m radius. Determine the speed of the flywheel immediately after riveting if it is 360 rpm before riveting. Also, find the number of rivets closed per minute.*

Solution

$P = 3$ kW, $m = 220$ kg, $k = 0.5$ m,

$$\omega_1 = \frac{2\pi N}{60} = \frac{2\pi \times 360}{60} = 37.7 \text{ rad/s}$$

Energy required/riveting = 12 000 N.m

Energy supplied by the motor in 1 seconds = 3000 N.m

∴ energy supplied by the motor in 1.5 seconds = 3000 × 1.5 = 4500 N.m

Energy supplied by the flywheel

e = energy required/hole – energy supplied by the motor in 1.5 s

= 12000 – 4500 = 7500 N.m

Also $e = \frac{1}{2} I(\omega_1^2 - \omega_2^2) = \frac{1}{2} mk^2(\omega_1^2 - \omega_2^2)$

or $7500 = \frac{1}{2} \times 220 \times 0.5^2 (37.7^2 - \omega_2^2)$

or $37.7^2 - \omega_2^2 = 272.7$ or $\omega_2 = 33.89$ rad/s

or $N_2 = \frac{33.89 \times 60}{2\pi}$ 323.6 rpm

Now, energy supplied by the motor in one minute = 3000 × 60 N.m

Energy required/riveting = 12 000 N.m

∴ number of rivets closed /minute

$$= \frac{3000 \times 60}{12\,000} = 15$$

Example 13.27 *A punching machine carries out 6 holes per minute. Each hole of 40-mm diameter in 35-mm thick plate requires 8 N.m of energy/mm² of the sheared area. The punch has a stroke of 95 mm. Find the power of the motor required if the mean speed of the flywheel is 20 m/s. If total fluctuation of speed is not to exceed 3% of the mean speed, determine the mass of the flywheel.*

Solution

$d = 40$ mm $K = 0.03$

$t = 35$ mm Stroke = 95 mm

$v = 20$ m/s

As 6 holes are punched in one minute, time required to punch one hole is 10 s.

Energy required/hole or energy supplied by the motor in 10 seconds

= area of hole × energy required /mm²

$= \pi dt \times 8$

= 35 186 N.m

∴ energy supplied by the motor in 1 seconds

$= \frac{35186}{10} = 3518.6$ N.m

Power of the motor, $P = 3518.6$ W or <u>3.5186 kW</u>

The punch travels a distance of 190 mm (upstroke + downstroke) in 10 seconds (6 holes are punched in 1 minute).

∴ Actual time required to punch a hole in 35-mm thick plate $= \frac{10}{190} \times 35 = 1.842$ s

Energy supplied by the motor in 1.842 s

$= 3518.6 \times 1.842 = 6481$ N.m

Energy supplied by the flywheel

e = energy required/hole – energy supplied by the motor in 1.842 s

= 35 186 – 6481 = 28 705 N.m

or $2KE = 28\ 705$

∴ $2 \times 0.03 \times E = 28\ 705$

or $E = 478\ 417$

or $\frac{1}{2}mv^2 = 478\ 417$

or $\frac{1}{2}m(20)^2 = 478\ 417$

or $m = \underline{2392}$ kg

Example 13.28 *A punching machine punches 20 holes of 30-mm diameter in 20-mm thick plates per minute. The actual punching operation is done in 1/10th of a revolution of the crankshaft. Ultimate shear strength of the steel plates is 280 N/mm². The coefficient of fluctuation of speed is 0.12. The flywheel with a maximum diameter of 1.6 m rotates at 12 times the speed of the crankshaft. Determine the*

(i) power of the motor assuming the mechanical efficiency to be 92%

(ii) cross section of the flywheel rim if width is twice the thickness

The flywheel is of cast iron with a working tensile stress of 6 N/mm² and a density of 7000 kg/m³. The hub and the spokes of the flywheel may be assumed to deliver 8% of the rotational inertia of the wheel.

Solution $d = 30$ mm, $t = 20$ mm, $\tau_u = 280$ N/mm², $n = 20$, $\eta = 0.92$, $K = 0.12$, $\rho = 7000$ kg/m³, $D = 1.6$ m, $k = D/2 = 0.8$ m

Maximum shear force required/punching

= area × ultimate shear stress

$= \pi \times 30 \times 20 \times 280 = 527\ 800$ N

Energy required per punching or stroke

= Average shear force × displacement (thickness)

$= \frac{527\ 800}{2} \times 0.02 = 5278$ N.m

Energy required per second = Energy per stroke × No. of strokes per second

$= 5278 \times \frac{20}{60} = 1759.3$

Power of the motor

= Energy required per second/Efficiency

$= \frac{1759.3}{0.92} = 1912$ W or 1.912 kW

As the actual punching is done in 1/10th of a cycle, the energy is stored in the flywheel during the 9/10th of the cycle.

∴ maximum fluctuation of energy = energy stored in the flywheel/stroke

$= 5278 \times 0.9 = 4750$ N.m

Since the hub and the spokes of the flywheel delivers 8% of the rotational inertia of the wheel, maximum fluctuation of energy provided by the rim $= 4750 \times 0.8 = 4370$ N.m

Mean angular speed of the flywheel

$= \frac{2\pi(20 \times 12)}{60} = 25.13$ rad/s

$$K = \frac{e}{I\omega^2} = \frac{e}{mk^2\omega^2}$$

or $0.12 = \frac{4370}{m \times 0.8^2 \times 25.13^2}$

or $m = 90$ kg

or Density × volume = 90

or $\rho \times (\pi D) \times t \times 4.5t = 90$

or $7000 \times \pi \times 1.6 \times t \times 2t = 90$

or $t = 0.0358$ m or 35.8 mm

or $b = 2 \times 35.8 = 71.6$ mm

Summary

1. Dynamic forces are associated with accelerating masses. As all machines have some accelerating parts, dynamic forces are always present when the machines operate.
2. *D'Alembert's* principle states that the inertia forces and couples, and the external forces and torques on a body together give statical equilibrium.
3. In graphical solutions, it is possible to replace inertia force and inertia couple by an *equivalent offset inertia force* which can account for both. This is done by displacing the line of action of the inertia force from the centre of mass.
4. The sense of angular acceleration of the connecting rod is such that it tends to reduce the angle of the connecting rod with the line of stroke.
5. *The piston effort* is the net or effective force applied on the piston.
6. Inertia force on the piston,
$$F_b = mf = mr\omega^2\left(\cos\theta + \frac{\cos 2\theta}{n}\right)$$
7. *Crank effort* is the net effort (force) applied at the crankpin perpendicular to the crank which gives the required turning moment on the crankshaft.
8. Turning moment due to force F on the piston
$$= Fr\left(\sin\theta + \frac{\sin 2\theta}{2\sqrt{n^2 - \sin^2\theta}}\right)$$
9. *A dynamically equivalent system* means that the rigid link is replaced by a link with two point masses in such a way that it has the same motion as the rigid link when subjected to the same force, i.e., the centre of mass of the equivalent link has the same linear acceleration and the link has the same angular acceleration.
10. The distributed mass of a rod can be replaced by two point masses to have the same dynamical properties if the sum of the two masses is equal to the total mass, the combined centre of mass coincides with that of the rod and the moment of inertia of two point masses about the perpendicular axis through their combined centre of mass is equal to that of the rod.
11. In the analysis of the connecting rod, the two point masses are considered to be located at the centre of the two end bearings and then a correction is applied for the error involved.
12. A plot of T vs. θ is known as the *turning-moment diagram*.
13. The difference between the maximum and minimum kinetic energies of the flywheel is known as the *maximum fluctuation of energy.*
14. The difference between the greatest speed and the least speed is known as the *maximum fluctuation of speed.*
15. A flywheel is used to control the variations in speed during each cycle of an engine.
16. Coefficient of fluctuation of speed is given by
$$K = \frac{e}{I\omega^2} = \frac{e}{2E}$$

Exercises

1. State and explain D' Alembert's principle.
2. What do you mean by equivalent offset inertia force? Explain.
3. Derive an expression for the angular acceleration of the connecting rod of a reciprocating engine.
4. What is meant by piston effort and crank effort?
5. Derive a relation for the turning moment at the crankshaft in terms of piston effort and the angle turned by the crank.
6. What do you mean by dynamical equivalent system? Explain.
7. In what way is the inertia of the connecting rod of a reciprocating engine taken into account?
8. When and why is the correction couple applied while considering the inertia of the connecting rod of a reciprocating engine?
9. Describe the graphical method of considering the inertia of the connecting rod of a reciprocating engine.
10. What are turning-moment diagrams? Why are they drawn?
11. Define the terms coefficient of fluctuation of energy and coefficient of fluctuation of speed.
12. What is a flywheel? What is its use?
13. Find a relation for the coefficient of fluctuation of speed in terms of maximum fluctuation of energy

and the kinetic energy of the flywheel at mean speed.

14. In a four-link mechanism *ABCD*, the link *AB* revolves with an angular velocity of 10 rad/s and angular acceleration of 25 rad/s² at the instant when it makes an angle of 45° with *AD*, the fixed link. The lengths of the links are
AB = *CD* = 800 mm, *BC* = 1000 mm, and *AD* = 1500 mm
The mass of the links is 4 kg/m length. Determine the torque required to overcome the inertia forces, neglecting the gravitational effects. Assume all links to be of uniform cross-sections.
(82.2 N.m)

15. The following data relate to a four-link mechanism:

Link	*Length*	*Mass*	*MOI about an axis through centre of mass*
AB	60 mm	0.2 kg	80 kg.mm²
BC	200 mm	0.4 kg	1600 kg.mm²
CD	100 mm	0.6 kg	400 kg.mm²
AD	140 mm		

AD is the fixed link. The centres of mass for the links *BC* and *CD* lie at their midpoints whereas the centre of mass for link *AB* lies at *A*. Find the drive torque on the link *AB* at the instant when it rotates at an angular velocity of 47.5 rad/s counter-clockwise and ∠*DAB* 135°. Neglect gravity effects.
(1.96 N.m clockwise)

16. The effective steam pressure on the piston of a vertical steam engine is 200 kN/m² when the crank is 40° from the inner-dead centre on the downstroke. The crank length is 300 mm and the connecting rod length is 1200 mm. The diameter of the cylinder is 800 mm. What will be the torque on the crankshaft if the engine speed is 300 rpm and the mass of the reciprocating parts 250 kg?
(9916 N.m)

17. The length of the connecting rod of a gas engine is 500 mm and its centre of gravity lies at 165 mm from the crank-pin centre. The rod has a mass of 80 kg and a radius of gyration of 182 mm about an axis through the centre of mass. The stroke of piston is 225 mm and the crank speed is 300 rpm. Determine the inertia force on the crankshaft when the crank has turned (a) 30°, and (b) 135° from the inner-dead centre.
(302.3 N.m; 226.7 N.m)

18. The connecting rod of an IC engine is 450 mm long and has a mass of 2 kg. The centre of mass of the rod is 300 mm from the small end and its radius of gyration about an axis through this centre is 175 mm. The mass of the piston and the gudgen pin is 2.5 kg and the stroke is 300 mm. The cylinder diameter is 115 mm. Determine the magnitude and the direction of the torque applied on the crankshaft when the crank is 40° and the piston is moving away from the inner dead centre under an effective gas pressure of 2 N.mm². The engine speed is 1000 rpm.
(1994 N.m)

19. The connecting rod of a vertical high-speed engine is 600 mm long between centres and has a mass of 3 kg. Its centre of mass lies at 200 mm from the big end bearing. When suspended as a pendulum from the gudgeon pin axis, it makes 45 complete oscillations in 30 seconds. The piston stroke is 250 mm. The mass of the reciprocating parts is 1.2 kg. Determine the inertia torque on the crankshaft when the crank makes an angle of 140° with top-dead centre. The engine speed is 1500 rpm.
(361.7 N.m)

20. The turning-moment diagram for a petrol engine is drawn to a vertical scale of 1 mm to 6 N.m and a horizontal scale of 1 mm to 1°. The turning moment repeats itself after every half revolution of engine. The areas above and below the mean torque line are
305, 710, 50, 350, 980 and 275 mm²
The rotating parts amount to a mass of 40 kg at a radius of gyration of 140 mm. Calculate the coefficient of fluctuation of speed if the speed of the engine is 1500 rpm.
(0.55%)

21. Determine the energy released by a flywheel having a mass of 2 kN and radius of gyration of 1.2 m when its speed decreases from 460 rpm to 435 rpm.
(353.59 kJ)

22. A flywheel is used to give up 18 kJ of energy in reducing its speed from 100 rpm to 98 rpm. Determine its kinetic energy at 140 rpm.
(890.9 kJ)

23. The cranks of a three-cylinder single-acting engine are set equally at 120°. The engine speed is 540 rpm. The turning-moment diagram for each cylinder is a triangle for the power stroke with a maximum torque of 100 N.m at 60° after dead-centre of the corresponding crank. On the return stroke, the torque is sensibly zero. Determine the
(a) power developed
(b) coefficient of fluctuation of speed if the

flywheel has a mass of 7.5 kg with a radius of gyration of 65 mm

(c) coefficient of fluctuation of energy

(d) maximum angular acceleration of the flywheel

(4.24 kW; 12.9%; 2.78%; 789 rad/s^2)

24. A certain machine requires a torque of (1500 + 200 sin θ) N.m to drive it, where is the angle of rotation of the shaft. The machine is directly coupled to an engine which produces a torque of (1500 + 200 sin 2θ) N.m. The flywheel and the other rotating parts attached to the engine have a mass of 300 kg at a radius of gyration of 200 mm. If the mean speed is 200 rpm, find the

(a) fluctuation of energy

(b) total percentage fluctuation of speed

(c) maximum and the minimum angular acceleration of the flywheel and the corresponding shaft positions

(490 N.m; 9.3%; 10 rad/s^2, 35.5; 33.35 rad/s^2, 127.9°)

25. A constant torque motor of 2.5 kW drives a riveting machine. The mass of the moving parts including the flywheel is 125 kg at 700 mm radius of gyration. One riveting operation absorbs 1 kJ of energy and takes one second. Speed of the flywheel is 240 rpm before riveting. Determine the

(ii) number of rivets closed per hour, and

(iii) reduction in speed after the riveting operation.

(900; 52.7 rpm)

26. A machine tool performs an operation intermittently. It is driven continuously by a motor. Each operation takes 8 seconds and five operations are done per minute. The machine is fitted with a flywheel having a mass of 200 kg with a mean radius of gyration of 400 mm. When the operation is being performed, the speed drops from the normal speed of 400 rpm to 250 rpm. Determine the power of the motor required. Also, find how much energy is used in performing each operation.

(4.28 kW, 51.3 kJ)

27. A shearing machine is used to cut flat strips and each operation requires 37.5 kN.m of energy. The machine has a flywheel with radius of gyration of 900 mm. The speed at the start of each operation is 1300 rpm. Determine the mass of the flywheel assuming that the energy required for cutting is fully supplied by the flywheel and the speed reduction is not more than 15% of the maximum. Also, find the torque supplied to the flywheel so that it regains its full speed in 3.3 seconds.

(1812.5 kg, 902.9 N.m)

14 BALANCING

Introduction

Often an unbalance of forces is produced in rotary or reciprocating machinery due to the inertia forces associated with the moving masses. Balancing is the process of designing or modifying machinery so that the unbalance is reduced to an acceptable level and if possible is eliminated entirely.

A particle or mass moving in a circular path experiences a centripetal acceleration and a force is required to produce it. An equal and opposite force acting radially outwards acts on the axis of rotation and is known as centrifugal force [Fig. 14.1(a)]. This is a disturbing force on the axis of rotation, the magnitude of which is constant but the direction changes with the rotation of the mass.

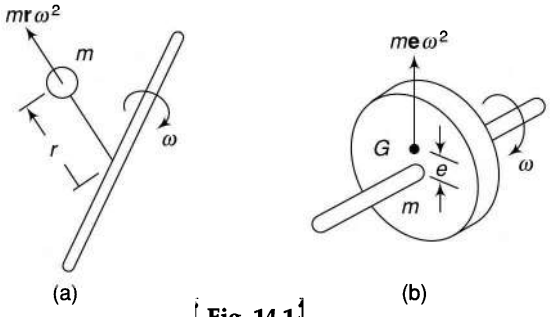

Fig. 14.1

In a revolving rotor, the centrifugal force remains balanced as long as the centre of the mass of the rotor lies on the axis of the shaft. When the centre of mass does not lie on the axis or there is an eccentricity, an unbalanced force is produced (Fig. 14.1b). This type of unbalance is very common. For example, in steam turbine rotors, engine crankshafts, rotary compressors and centrifugal pumps.

Most of the serious problems encountered in high-speed machinery are the direct result of unbalanced forces. These forces exerted on the frame by the moving machine members are time varying, impart vibratory motion to the frame and produce noise. Also, there are human discomfort and detrimental effects on the machine performance and the structural integrity of the machine foundation.

The most common approach to balancing is by redistributing the mass which may be accomplished by addition or removal of mass from various machine members.

There are two basic types of unbalance—rotating unbalance and reciprocating unbalance—which may occur separately or in combination.

14.1 STATIC BALANCING

A system of rotating masses is said to be in static balance if the combined mass centre of the system lies on the axis of rotation.

Figure 14.2 shows a rigid rotor revolving with a constant angular velocity of ω rad/s. A number of masses, say three, are depicted by point masses at different radii in the same transverse plane. They may represent different kinds of rotating masses such as turbine blades, eccentric discs, etc. If m_1, m_2 and m_3 are the masses revolving at radii r_1, r_2 and r_3 respectively in the same plane, then each mass produces a centrifugal force acting radially outwards from the axis of rotation. Let **F** be the vector sum of these forces,

$$\mathbf{F} = m_1\mathbf{r}_1\omega^2 + m_2\mathbf{r}_2\omega^2 + m_3\mathbf{r}_3\omega^2$$

The rotor is said to be statically balanced if the vector sum **F** is zero.

If **F** is not zero, i.e., the rotor is unbalanced, then introduce a counterweight (balance weight) of mass m_c, at radius $\mathbf{r}_c$ to balance the rotor so that

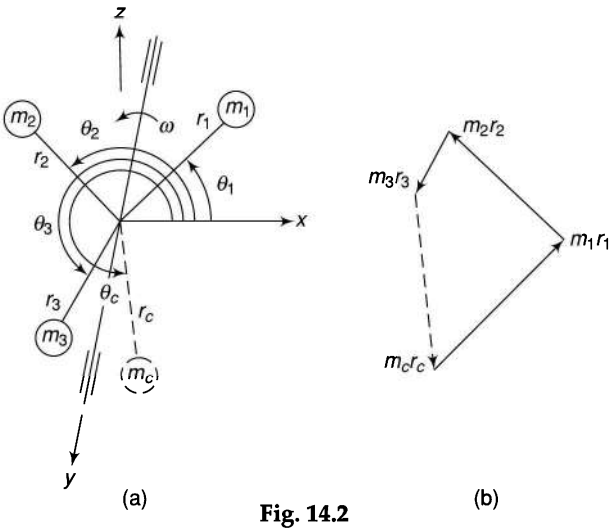

Fig. 14.2

$$m_1\mathbf{r}_1\omega^2 + m_2\mathbf{r}_2\omega^2 + m_3\mathbf{r}_3\omega^2 + m_c\mathbf{r}_c\omega^2 = 0 \tag{14.1}$$

or

$$m_1\mathbf{r}_1 + m_2\mathbf{r}_2 + m_3\mathbf{r}_3 = 0 \tag{14.1a}$$

The magnitude of either m_c or $\mathbf{r}_c$ may be selected and of the other can be calculated.

In general, if $\sum m\mathbf{r}$ is the vector sum of $m_1\mathbf{r}_1$, $m_2\mathbf{r}_2$, $m_3\mathbf{r}_3$, $m_4\mathbf{r}_4$, etc., then

$$\sum m\mathbf{r} + m_c\mathbf{r}_c = 0 \tag{14.2}$$

The equation can be solved either mathematically or graphically. To solve it mathematically, divide each force into its x and z components,

i.e., $$\sum mr\cos\theta + m_cr_c\cos\theta_c = 0$$

and $$\sum mr\sin\theta + m_cr_c\sin\theta_c = 0$$

or

$$m_cr_c\cos\theta_c = -\sum mr\cos\theta \tag{i}$$

and

$$m_cr_c\sin\theta_c = -\sum mr\sin\theta \tag{ii}$$

Squaring and adding (i) and (ii),

$$m_cr_c = \sqrt{(\sum mr\cos\theta)^2 + (\sum mr\sin\theta)^2} \tag{14.3}$$

Dividing (ii) by (i),

$$\tan\theta_c = \frac{-\sum mr\sin\theta}{-\sum mr\cos\theta} \tag{14.4}$$

The signs of the numerator and denominator of this function identify the quadrant of the angle.

In graphical solution, vectors, $m_1\mathbf{r}_1$, $m_2\mathbf{r}_2$, $m_3\mathbf{r}_3$, etc., are added. If they close in a loop, the system is balanced. Otherwise, the closing vector will be giving $m_c\mathbf{r}_c$. Its direction identifies the angular position of the countermass relative to the other masses.

Example 14.1 *Three masses of 8 kg, 12 kg and 15 kg attached at radial distances of 80 mm, 100 mm and 60 mm respectively to a disc on a shaft are in complete balance. Determine the angular positions of the masses of 12 kg and 15 kg relative to the 8-kg mass.*

Solution

$m_1r_1 = 8 \times 80 = 640$

$m_2r_2 = 12 \times 100 = 1200$

$m_3r_3 = 15 \times 60 = 900$

For graphical solution, take a vector representing m_1r_1 of 640-units magnitude along the x-axis. Take the other two vectors through its two ends and complete the triangle. Note that the triangle can be completed in four ways as shown in Fig. 14.3. The results of the four options are

1. $\theta_2 = 227.4°$ and $\theta_3 = 79°$
2. $\theta_2 = 132.6°$ and $\theta_3 = 281°$
3. $\theta_2 = 227.4°$ and $\theta_3 = 79°$
4. $\theta_2 = 132.6°$ and $\theta_3 = 281°$

However, these are only two sets of solutions.

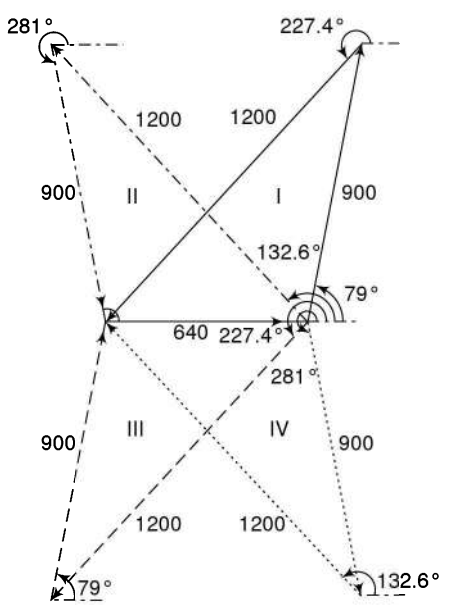

Fig. 14.3

Analytical solution

$\sum m\mathbf{r} = 0$

or $640 \cos 0° + 1200 \cos\theta_2 + 900 \cos\theta_3 = 0$

or $1200 \cos\theta_2 = -(640 + 900 \cos\theta_3)$ (i)

and $640 \sin 0° + 1200 \sin\theta_2 + 900 \sin\theta_3 = 0$

or $1200 \sin\theta_2 = -900 \sin\theta_3$ (ii)

Squaring and adding (i) and (ii),

$1200^2 = 640^2 + 900^2 \cos^2\theta_3 + 2 \times 640 \times 900 \times \cos\theta_3 + 900^2 \sin^2\theta_3$

$= 640^2 + 900^2 + 2 \times 640 \times 900 \times \cos\theta_3$

$\cos\theta_3 = 0.1913$

or $\theta_3 = 79°$ or $281°$

When $\theta_3 = 79°$, $1200 \sin \theta_2 = -900 \sin 79°$

or $\sin \theta_2 = -0.736$

or $\theta_2 = -47.4°$ or $132.6°$ or $227.4°$

But as $\sin\theta_2$ is negative and $\cos\theta_2$ is also negative which can be found from (i), the corresponding angle $\theta_3 = 227.4°$

In a similar way by taking $\theta_3 = 281°$, θ_2 can be found to be $132.6°$

Example 14.2 *A circular disc mounted on a shaft carries three attached masses of 4 kg, 3 kg and 2.5 kg at radial distances of 75 mm, 85 mm and 50 mm and at the angular positions of 45°, 135° and 240° respectively The angular positions are measured counter-clockwise from the reference line along the x-axis. Determine the amount of the countermass at a radial distance of 75 mm required for the static balance.*

Solution Figure 14.2 shows the various masses according to the given data.

$m_1r_1 = 4 \times 75 = 300,$

$m_2r_2 = 3 \times 85 = 255,$

$m_3r_3 = 2.5 \times 50 = 125$

$\sum m\mathbf{r} + m_c\mathbf{r}_c = 0$

or $300 \cos 45° + 255 \cos 135° + 125 \cos 240° + m_cr_c \cos \theta_c = 0$

and $300 \cos 45° + 255 \sin 135° + 125 \cos 240° + m_cr_c \sin \theta_c = 0$

Squaring, adding and then solving,

$$\therefore \quad m_c r_c = \left[\begin{pmatrix} 300\cos 45° + 255\cos 135° \\ +125\cos 240° \end{pmatrix}^2 + \begin{pmatrix} 300\sin 45° + 255\sin 135° \\ +125\cos 240° \end{pmatrix}^2 \right]^{1/2}$$

or $\quad m_c \times 75 = [(-30.68)^2 + (284.2)^2]^{1/2}$

$= 285.8$ kg.mm

or $\quad m_c = 3.81$ kg

$$\tan\theta_c = \frac{-284.2}{-(-30.68)} = \frac{-284.2}{+30.68} = -9.26$$

$\therefore \quad \theta_c = 276°12'$

θ_c lies in the fourth quadrant ($\because$ numerator is negative and denominator is positive).

The graphical solution has been carried out in Fig. 14.3(b).

14.2 DYNAMIC BALANCING

When several masses rotate in different planes, the centrifugal forces, in addition to being out of balance, also form couples. A system of rotating masses is in dynamic balance when there does not exist any resultant centrifugal force as well as resultant couple.

In the work that follows, the products of mr and mrl (instead of $mr\omega^2$ and $mrl\omega^2$), usually, have been referred as force and couple respectively as it is more convenient to draw force and couple polygons with these quantities.

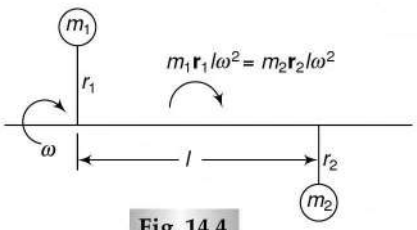

Fig. 14.4

If m_1 and m_2 are two masses (Fig. 14.4) revolving diametrically opposite to each other in different planes such that $m_1 r_1 = m_2 r_2$, the centrifugal forces are balanced, but an unbalanced couple of magnitude $m_1 r_1 l$ ($= m_2 r_2 l$) is introduced. The couple acts in a plane that contains the axis of rotation and the two masses. Thus, the couple is of constant magnitude but variable direction.

14.3 TRANSFERENCE OF A FORCE FROM ONE PLANE TO ANOTHER

Let m be the mass at radius r rotating in a plane at a distance l from another plane (Fig. 14.5). The equilibrium of the system does not change if two equal and opposite forces $F_1 = F_2$ ($= mr$) are added in the latter plane. The net effect would be a single force F_1 ($= mr$) in the second plane having the direction of the original force along with a couple mrl formed by the forces mr and F_2 in a plane containing these forces and the shaft. As the moment of a couple is the same about any point in its plane (equal to the product of one of the forces and the arm), the couple may be assumed to rotate the shaft about the point O.

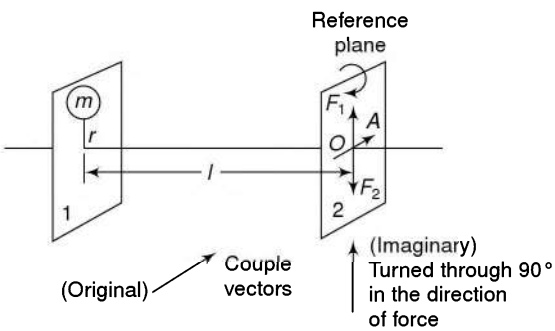

Fig. 14.5

The axis of rotation of the couple is thus a line OA drawn perpendicular to the shaft through O. A line drawn parallel to the axis and to a suitable scale can represent the couple vectorially, the sense of rotation of which is given by the right-hand corkscrew rule, i.e., for a clockwise couple, the direction is to be away from the viewer. However, in balancing problems, it becomes convenient if the couple vectors are drawn by turning them through 90°, i.e., by drawing them parallel to the force vectors. This does not affect their relative positions.

A plane passing through a point such as O and perpendicular to the axis of the shaft is called a *reference plane*. Other masses acting in different planes can be transferred to the reference plane in a similar manner as discussed above.

14.4 BALANCING OF SEVERAL MASSES IN DIFFERENT PLANES

Let there be a rotor revolving with a uniform angular velocity ω [Fig. 14.6(a)]. m_1, m_2 and m_3 are the masses attached to the rotor at radii r_1, r_2 and r_3 respectively. The masses m_1, m_2 and m_3 rotate in planes 1, 2 and 3 respectively. Choose a reference plane at O so that the distances of the planes 1, 2 and 3 from O are l_1, l_2 and l_3 respectively.

Transference of each unbalanced force to the reference plane introduces the like number of forces and couples.

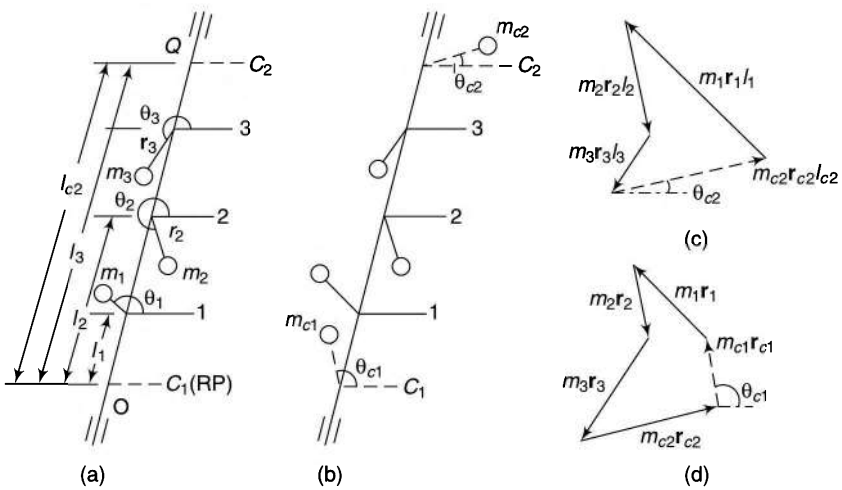

Fig. 14.6

The unbalanced forces in the reference plane are $m_1\mathbf{r_1}\omega^2$, $m_2\mathbf{r_2}\omega^2$ and $m_3\mathbf{r_3}\omega^2$ acting radially outwards.

The unbalanced couples in the reference plane are $m_1\mathbf{r_1}\omega^2 l_1$, $m_2\mathbf{r_2}\omega^2 l_2$ and $m_3\mathbf{r_3}\omega^2 l_3$ which may be represented by vectors parallel to the respective force vectors, i.e., parallel to the respective radii of m_1, m_2 and m_3.

For complete balancing of the rotor, the resultant force and the resultant couple both should be zero, i.e.,

$$m_1\mathbf{r}_1\omega^2 + m_2\mathbf{r}_2\omega^2 + m_3\mathbf{r}_3\omega^2 = 0 \tag{14.5}$$

and

$$m_1\mathbf{r}_1 l_1\omega^2 + m_2\mathbf{r}_2\, l_2\omega^2 + m_3\mathbf{r}_3\, l_3\omega^2 = 0 \tag{14.6}$$

If the Eqs (14.5) and (14.6) are not satisfied, then there are unbalanced forces and couples. A mass placed in the reference plane may satisfy the force equation but the couple equation is satisfied only by two equal forces in different transverse planes. Thus, in general, two planes are needed to balance a system of rotating masses.

Therefore, in order to satisfy Eqs (14.5) and (14.6), introduce two counter-masses m_{c1} and m_{c2} at radii $r_{c1}$and r_{c2} respectively. Then Eq. (14.5) may be written as

$$m_1\mathbf{r}_1\omega^2 + m_2\mathbf{r}_2\omega^2 + m_3\mathbf{r}_3\omega^2 + m_{c1}\mathbf{r}_{c1}\omega^2 + m_{c2}\mathbf{r}_{c2}\omega^2 = 0 \tag{14.7}$$

or

$$m_1\mathbf{r}_1 + m_2\mathbf{r}_2 + m_3\mathbf{r}_3 + m_{c1}\mathbf{r}_{c1} + m_{c2}\mathbf{r}_{c2} = 0 \tag{14.7a}$$

In general,

$$\Sigma m\mathbf{r} + m_{c1}\mathbf{r}_{c1} + m_{c2}\mathbf{r}_{c2} = 0 \tag{14.8}$$

Let the two countermasses be placed in transverse planes at axial locations O and Q, i.e., the countermass m_{c1} be placed in the reference plane and the distance of the plane of m_{c2} be l_{c2} from the reference plane.

Equation (14.6) modifies to (taking moments about O)

$$m_1\mathbf{r}_1 l_1\omega^2 + m_2\mathbf{r}_2\, l_2\omega^2 + m_3\mathbf{r}_3\, l_3\omega^2 + m_{c2}\mathbf{r}_{c2}\, l_{c2}\omega^2 = 0 \tag{14.9}$$

or

$$m_1\mathbf{r}_1\, l_1 + m_2\mathbf{r}_2\, l_2 + m_3\mathbf{r}_3\, l_3 + m_{c2}\mathbf{r}_{c2}\, l_{c2} = 0 \tag{14.9a}$$

In general,

$$\Sigma m\mathbf{r}l + m_{c2}\mathbf{r}_{c2}\, l_{c2} = 0 \tag{14.10}$$

Thus, Eqs (14.8) and (14.10) are the necessary conditions for dynamic balancing of the rotor. Again the equations can be solved mathematically or graphically.

Dividing Eq. (14.10) into component form

$$\Sigma m\mathbf{r}l\cos\theta + m_{c2}\mathbf{r}_{c2}l_{c2}\cos\theta_{c2} = 0$$

and

$$\Sigma m\mathbf{r}l\sin\theta + m_{c2}\mathbf{r}_{c2}l_{c2}\sin\theta_{c2} = 0$$

or

$$m_{c2}\mathbf{r}_{c2}l_{c2}\cos\theta_{c2} = -\Sigma m\mathbf{r}l\cos\theta \tag{i}$$

and

$$m_{c2}\mathbf{r}_{c2}l_{c2}\sin\theta_{c2} = -\Sigma m\mathbf{r}l\sin\theta \tag{ii}$$

Squaring and adding (i) and (ii)

$$m_{c2}r_{c2}l_{c2} = \sqrt{(\Sigma\, mrl\cos\theta)^2 + (\Sigma mrl\sin\theta)^2} \tag{14.11}$$

Dividing (ii) by (i),

$$\tan\theta_{c2} = \frac{-\Sigma\, mrl\sin\theta}{-\Sigma\, mrl\cos\theta} \tag{14.12}$$

After obtaining the values of m_{c2} and θ_{c2} from the above equations, solve Eq. (14.8) by taking its components,

$$m_{c1}r_{c1} = \sqrt{(\Sigma\, mr\cos\theta + m_{c2}r_{c2}\cos\theta_{c2})^2 + (\Sigma\, mrl\sin\theta + m_{c2}r_{c2}\sin\theta_{c2})^2} \tag{14.13}$$

and

$$\tan\theta_{c1} = \frac{-(\Sigma\, mr\sin\theta + m_{c2}r_{c2}\sin\theta_{c2})}{-(\Sigma\, mr\cos\theta + m_{c2}r_{c2}\cos\theta_{c2})} \tag{14.14}$$

To solve Eqs (14.8) and (14.10) graphically, Eq. (14.10) is solved first and a couple polygon is made by adding the known vectors and considering each vector parallel to the radial line of the mass. Then the closing vector will be $m_{c2}\mathbf{r}_{c2}l_{c2}$, the direction of which specifies the angular position of the countermass m_{c2} [Fig. 14.6(c)] in the plane at the point Q. Then solve Eq. (14.8) and make a force polygon by adding the known vectors (along with the vector $m_{c2}\mathbf{r}_{c2}$). The closing vector is $m_{c1}\mathbf{r}_{c1}$, identifying the magnitude and the direction of the countermass m_{c1} [Fig. 14.6(d)]. Figure 14.6(b) represents the position of the balancing masses on the rotating shaft.

Example 14.3 *A rotating shaft carries three unbalanced masses of 4 kg, 3 kg and 2.5 kg at radial distances of 75 mm, 85 mm and 50 mm and at the angular positions of 45°, 135° and 240° respectively. The second and the third masses are in the planes at 200 mm and 375 mm from the plane of the first mass. The angular positions are measured counter-clockwise from the reference line along x-axis and viewing the shaft from the first mass end.*

The shaft length is 800 mm between bearings and the distance between the plane of the first mass and the bearing at that end is 225 mm. Determine the amount of the countermasses in planes at 75 mm from the bearings for the complete balance of the shaft. The first countermass is to be in a plane between the first mass and the bearing and the second mass in a plane between the third mass and the bearing at that end.

Solution Figure 14.7(a) shows the planes of unbalanced masses as well as the planes of the countermasses. Plane C_1 is to be taken as the reference plane and the various distances are to be considered from this plane.

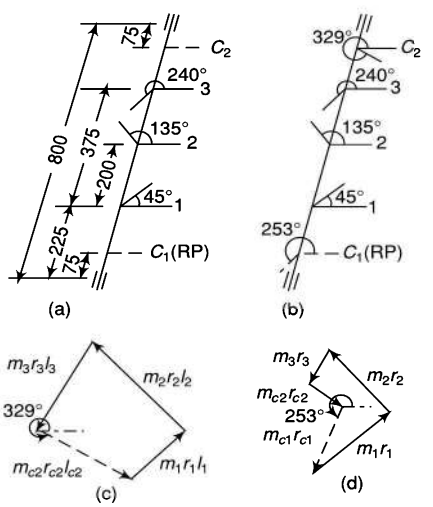

Fig. 14.7

Analytical solution

$$l_{c2} = (800 - 75 \times 2) = 650 \text{ mm}$$
$$l_1 = 225 - 75 = 150 \text{ mm}$$
$$l_2 = 150 + 200 = 350 \text{ mm}$$
$$l_3 = 150 + 375 = 525 \text{ mm}$$

$m_1r_1l_1 = 4 \times 75 \times 150 = 45\,000$ $\quad m_1r_1 = 4 \times 75 = 300$

$m_2r_2l_2 = 3 \times 85 \times 350 = 89\,250$ $\quad m_2r_2 = 3 \times 85 = 255$

$m_3r_3l_3 = 2.5 \times 50 \times 525 = 65\,625$ $\quad m_3r_3 = 2.5 \times 50 = 125$

$$\Sigma m\mathbf{r}l + m_{c2}\mathbf{r}_{c2}\, l_{c2} = 0$$

or $4500 \cos 45° + 89\,250 \cos 135° + 65\,625 \cos 240° + m_{c2}\mathbf{r}_{c2}l_{c2} \cos\theta_{c2} = 0$

and $45000 \sin 45° + 89\,250 \sin 135° + 65\,625 \sin 240° + m_{c2}\mathbf{r}_{c2}l_{c2} \sin\theta_{c2} = 0$

Squaring, adding and then solving,

$$m_{c2}r_{c2}l_{c2} = \left[\begin{pmatrix} 45\,000 \cos 45° + 89\,250 \\ \cos 135° + 65\,625 \cos 240° \end{pmatrix}^2 + \begin{pmatrix} 45\,000 \sin 45° + 89\,250 \\ \sin 135° + 65\,625 \sin 240° \end{pmatrix}^2\right]^{1/2}$$

$$= [(-64\,102)^2 + (38\,096)^2]^{1/2}$$

or $\quad m_{c2} \times 40 \times 650 = 74\,568$

$$m_{c2} = \underline{2.868 \text{ kg}}$$

$$\tan\theta_{c2} = \frac{-38\,096}{-(-64\,102)} = -0.594$$

$$\theta_{c2} = 329.3° \text{ or } \underline{329°18'}$$

Now,

$$\Sigma m\mathbf{r} + m_{c1}\mathbf{r}_{c1} + m_{c2}\mathbf{r}_{c2} = 0$$

or $\quad 300 \cos 45° + 255 \cos 135° + 125 \cos 240° + m_{c1}\mathbf{r}_{c1} \cos\theta_1 + 2.868 \times 40 \cos 329.3 = 0$

and $\quad 300 \sin 45° + 255 \sin 135° + 125 \sin 240° + m_{c1}\mathbf{r}_{c1} \sin\theta_1 + 2.868 \times 40 \sin 329.3 = 0$

Squaring, adding and then solving,

$$m_{c1}r_{c1} = \left[\begin{matrix} (300 \cos 45° + 255 \cos 135° \\ + 125 \cos 240° + 2.868 \\ \times 40 \cos 329.3°)^2 + \\ (300 \sin 45° + 255 \sin 135° \\ + 125 \sin 240° + 2.868 \\ \times 40 \sin 329.3°)^2 \end{matrix}\right]^{1/2}$$

$$m_{c1} \times 75 = [(67.96)^2 + (225.62)^2]^{1/2} = 235.63$$

$$m_{c1} = \underline{3.14 \text{ kg}}$$

$$\tan\theta_{c1} = \frac{-225.62}{-67.96} = 3.32; \theta_{c1} = 253.2° \text{ or } \underline{253°12'}$$

Graphical solution

The graphical solution has also been shown in Figs 14.7(c) and (d). From Fig. 14.7(c),

$$m_{c2}r_{c2}l_{c2} = 74\,000$$

$$\therefore \quad m_{c2} = \frac{74\,000}{40 \times 650} = 2.846 \text{ kg at } \underline{329°}$$

From Fig. 14.7(d),

$$m_{c1}r_{c1} = 235,$$

$$\therefore m_{c1} = \frac{235}{75} = 3.13 \text{ kg at } \underline{253°}$$

Figure 14.7(b) represents the position of the balancing masses on the rotating shaft.

Solution by using complex numbers

$$m_1r_1l_1 \angle\theta_1 = (4 \times 75 \times 150) \angle 45° = 45\,000 \angle 45°$$
$$= 31\,820 + j\,31\,820$$
$$m_2r_2l_2 \angle\theta_2 = (3 \times 85 \times 350) \angle 135° = 89\,250 \angle 135°$$
$$= -63\,109 + j\,63\,109$$
$$m_3r_3l_3 \angle\theta_3 = (2.5 \times 50 \times 525) \angle 240° = -65\,625 \angle 240°$$
$$= -32\,813 - j\,56\,833$$

Now,

$$m_1r_1l_1 \angle\theta_1 + m_2r_2l_2 \angle\theta_2 + m_3r_3l_3 \angle\theta_3 + m_{c2}r_{c2}l_{c2} \angle\theta_{c2} = 0$$
$$(31\,820 + j\,31\,820) + (-63\,109 + j\,63\,109) + (-32\,813 - j\,56\,833) + m_{c2}r_{c2}l_{c2} \angle\theta_{c2} = 0$$
$$m_{c2}r_{c2}l_{c2} \angle\theta_{c2} = 64\,102 - j\,38\,096 = 74\,568 \angle 329.3°$$
$$m_{c2} \times 40 \times 650 = 74\,568$$
$$mc_2 = \underline{2.868} \text{ kg}$$

Similarly,

$$m_1r_1\angle\theta_1 = (4 \times 75) \angle 45° = 300 \angle 45° = 212.1 + j\,212.1$$
$$m_2r_2\angle\theta_2 = (3 \times 85) \angle 135° = 255 \angle 135° = -180.3 + j\,180.3$$
$$m_3r_3\angle\theta_3 = (2.5 \times 50) \angle 240° = 125 \angle 240° = -62.5 - j\,108.3$$
$$m_{c2}r_{c2} \angle\angle\theta_{c2} = (2.868 \times 40) \angle 329.3° = 114.72 \angle 329.3° = 98.6 - j\,58.6$$

Now,

$$m_1r_1\angle\theta_1 + m_2r_2\angle\theta_2 + m_3r_3\angle\theta_3 + m_{c2}r_{c2} \angle\theta_{c2} + m_{c1}r_{c1} \angle\theta_{c1} = 0$$
$$(212.1 + j\,212.1) + (-180.3 + j\,180.3) + (-62.5 - j\,108.3) + (98.6 - j\,58.6) + m_{c2}r_{c2} \angle 329.3° = 0$$
$$m_{c1}r_{c1} \angle\theta_{c1} = -67.9 - j\,225.5$$
$$= 235.5 \angle 253.2°$$

or

$$m_{c1} \times 75 = 235.63$$
$$m_{c1} = \underline{3.14 \text{ kg}}$$

Example 14.4 *A shaft supported in bearings that are 1.6 m apart projects 400 mm beyond bearings at each end. It carries three pulleys one at each end and one at the centre of its length. The masses of the end pulleys are 40 kg and 22 kg and their centres of mass are at 12 mm and 18 mm respectively from the shaft axes. The mass of the centre pulley is 38 kg and its centre of mass is 15 mm from the shaft axis. The pulleys are arranged in a manner that they give static balance. Determine the*

(i) relative angular positions of the pulleys

(ii) dynamic forces developed on the bearings when the shaft rotates at 210 rpm

Solution

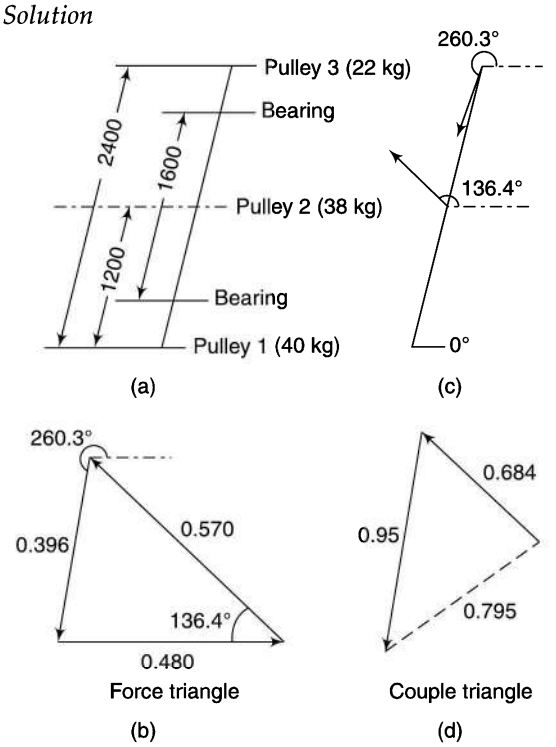

Fig. 14.8

Figure 14.8(a) shows the planes of the three pulleys as well as of the two bearings.

Let the plane of the pulley 1 be the reference plane.

$$m_1r_1 = 40 \times 0.012 = 0.48$$
$$m_2r_2l_2 = 38 \times 0.015 \times 1.2 = 0.684$$
$$m_2r_2 = 38 \times 0.015 = 0.57$$
$$m_3r_3l_3 = 22 \times 0.018 \times 2.4 = 0.95$$
$$m_3r_3 = 22 \times 0.018 = 0.396$$

Complete the force triangle as the three sides are known [Fig. 14.8(b)]. The mass at the plane 1 is chosen at 0° angle. By completing it, the directions of the other two masses are known which have been marked in Fig. 14.8(c).

Now, as the shaft is in complete static balance, there is only unbalanced couple which is to be the same about all planes. Thus, reactions due to the unbalanced couple are to be equal and opposite on the two bearings.

To find the magnitude of the unbalanced couple, add the two couple vectors as shown in Fig. 14.8(d). The closing side shown in dotted line represents the magnitude of the unbalanced couple.

The magnitude, $mrl = 0.795$ on measurement.

$\therefore$ unbalanced couple $= mr\omega^2.l$

$$= 0.795 \times \left(\frac{2\pi \times 210}{60}\right)^2 = 384.5 \text{ N.m}$$

The reaction on each bearing $= \dfrac{384.5}{1.6} = 240.3$ N

Example 14.5 *Four masses A, B, C and D carried by a rotating shaft at radii 80 mm, 100 mm, 160 mm and 120 mm respectively are completely balanced. Masses B, C and D are 8 kg, 4 kg and 3 kg respectively. Determine the mass A and the relative angular positions of the four masses if the planes are spaced 500 mm apart.*

Solution Figure 14.9(a) shows the planes of the four masses. Let plane A be the reference plane.

$$m_ar_a = m_1 \times 0.08 = 0.08\, m_1$$
$$m_br_bl_b = 8 \times 0.1 \times 0.5 = 0.4$$
$$m_br_b = 8 \times 0.1 = 0.8$$
$$m_cr_cl_c = 4 \times 0.16 \times 1 = 0.64$$
$$m_cr_c = 4 \times 0.16 = 0.64$$
$$m_dr_dl_d = 3 \times 0.12 \times 1.5 = 0.54$$
$$m_dr_d = 3 \times 0.12 = 0.36$$

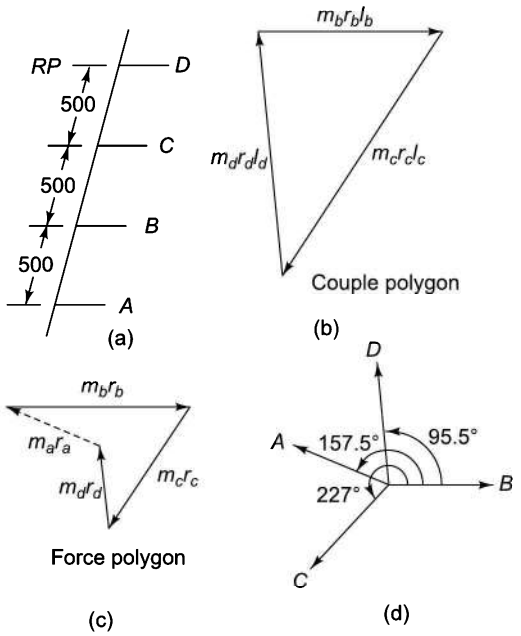

Fig. 14.9

On taking the plane A as the reference plane, there are only three couple vectors. Assuming the direction of any of the masses B, C or D at 0° angle, a vector triangle can be made as shown in Fig. 14.9(b). As the shaft is in complete balance, the arrowheads may be put in the same order. This provides the directions of masses of C and D relative to that of B.

Now, as the shaft is in complete static balance also, a force polygon may be completed as shown in Fig. 14.9(c). The closing side provides the magnitude of the mass radius.

The magnitude, $m_ar_a = 0.444$ on measurement.

or $\quad m_a = 0.444/0.08 = 5.55$ kg

The angular positions of masses A, C and D relative to that of the mass B are 95.5°, 157.5° and 227° counter-clockwise as shown in Fig. 14.9(d).

Example 14.6 *A rotor is completely balanced when masses of 2 kg and 1.2 kg are added temporarily in planes A and D each at 200 mm radius as shown in Fig. 14.10(a). The balanced mass in the plane A is along the x-axis whereas in the plane D, it is at 120° counter-clockwise.*

It is desired that the actual balancing is to be done by adding permanent masses in planes B and C, each at 120 mm radius. Determine the magnitudes and the directions of the masses B and C.

Solution

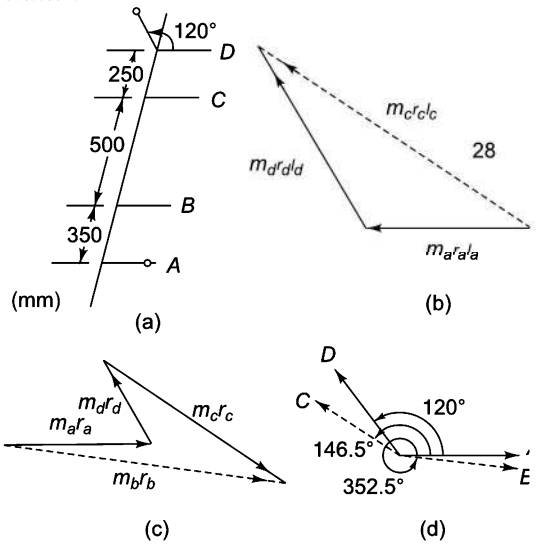

Fig. 14.10

It is given that the rotor is completely balanced with the temporary masses in planes A and D. It is required to find the masses and their directions in planes B and C which provide the same resultant force and the couple so that the rotor is again balanced.

Unbalanced couple about a plane at B

$$= m_a\mathbf{r}_a(-l_a) + m_d\mathbf{r}_d l_d = -m_a\mathbf{r}_a l_a + m_d\mathbf{r}_d l_d$$

where $m_a r_a l_a = 2 \times 0.2 \times (-0.35) = -0.14$

and $m_d r_d l_d = 1.2 \times 0.2 \times 0.75 = 0.18$

Assuming the masses required in planes B and C be m_b and m_c respectively, then the magnitude of the couples due to these masses must be equal to the above couple, i.e.,

$$0 + m_c\mathbf{r}_c l_c = -m_a\mathbf{r}_a l_a + m_d\mathbf{r}_d l_d$$

Thus, the resultant of the two vectors on the right-hand side provides the vector $m_c\mathbf{r}_c l_c$ as shown in Fig. in 14.10(b). On measurement, $m_c\mathbf{r}_c l_c = 0.28$ at 146.5°

$$\therefore\ m_c = \frac{0.28}{0.5 \times 0.12} = 4.67 \text{ kg at } 146.5^\circ$$

Similarly, the vector sum of the forces due to masses at B and C must be equal to the vector sum of the forces due to masses at A and D, i.e.,

$$m_b\mathbf{r}_b + m_c\mathbf{r}_c = m_a\mathbf{r}_a + m_d\mathbf{r}_d$$

or $$m_b\mathbf{r}_b = m_a\mathbf{r}_a + m_d\mathbf{r}_d - m_c\mathbf{r}_c$$

Now, $m_a r_a = 2 \times 0.2 = 0.4$

$m_d r_d = 1.2 \times 0.2 = 0.24$

$m_c r_c = 4.67 \times 0.12 = 0.56$

Thus the resultant of the three vectors on the right-hand side provides the vector $m_b\mathbf{r}_b$ as shown in Fig. 14.10(c). On measurement, $m_b\mathbf{r}_b = 0.75$ at 352.5°

$$\therefore\ m_b = \frac{0.75}{0.12} = 6.25 \text{ kg at } 352.5^\circ$$

Figure 14.10(d) shows angular positions of all the four masses.

Example 14.7 *Four masses A, B, C and D are completely balanced. Masses C and D make angles of 90° and 195° respectively with that of mass B in the counter-clockwise direction. The rotating masses have the following properties:*

$m_b = 25$ kg	$r_a = 150$ mm
$m_c = 40$ kg	$r_b = 200$ mm
$m_d = 35$ kg	$r_c = 100$ mm
	$r_d = 180$ mm

Planes B and C are 250 mm apart. Determine the

(i) mass A and its angular position with that of mass B

(ii) positions of all the planes relative to plane of mass A

Solution Refer Fig. 14.11(a).

$m_b r_b = 25 \times 100 = 5000$

$m_c r_c = 40 \times 100 = 4000$

$m_d r_d = 35 \times 180 = 6300$

For complete balance, taking $\theta_b = 0°$

$\sum mr \cos\theta = 0$ and $\sum mr \sin\theta = 0$

i.e., $m_a \times 150 \times \cos\theta_a + 5000 \cos 0° + 4000 \cos 90° + 6300 \cos 195° = 0$

or $m_a \times 150 \times \cos\theta_a + 5000 + 0 - 6085 = 0$

or $150\, m_a \cos\theta_a = 1085$ (i)

and $m_a \times 150 \times \sin\theta_a + 5000 \sin 0° + 4000 \sin 90° + 6300 \sin 195° = 0$

or $m_a \times 150 \times \sin\theta_a + 0 + 4000 - 1631 = 0$

or $150\, m_a \sin\theta_a = -2369$ (ii)

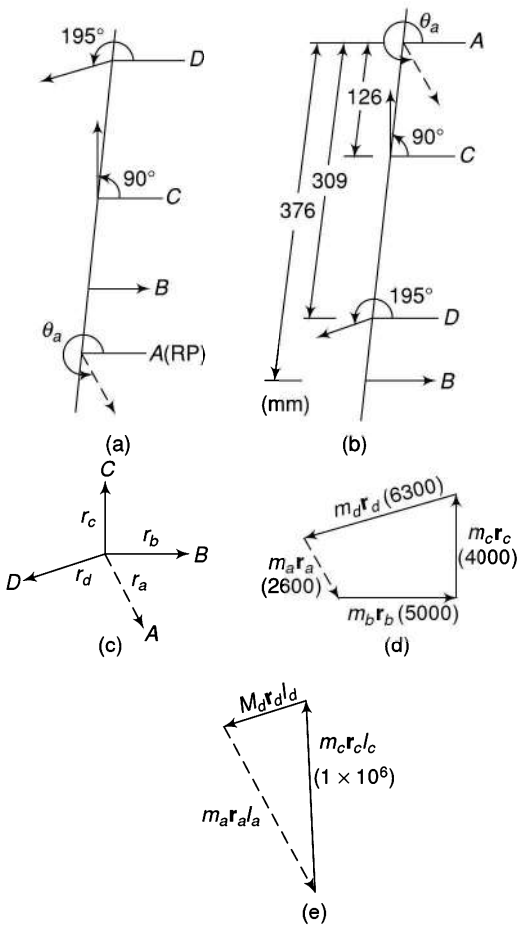

Fig. 14.11

Squaring and adding (i) and (ii),

$22\,500\, m_a^2 = (1085)^2 + (-2369)^2$

or $m_a^2 = 30\,175$

or $m_a = \underline{17.37 \text{ kg}}$

Dividing (ii) by (i),

$$\tan\theta_a = \frac{-236.9}{108.5} = -2.184$$

or $\theta_a = 294.6°$ or $\underline{294°36'}$

For complete balance, the couple equations are

$\sum mrl \cos\theta = 0$ and $\sum mrl \sin\theta = 0$

Taking A as the reference plane,

$5000\, l_b \cos 0° + 4000\, l_c \cos 90° + 6300\, l_d \cos 195° = 0$

or $5000\, l_b = 6085\, l_d$

or $l_b = 1.217\, l_d$

and $5000\, l_b \sin 0° + 4000\, l_c \sin 90° + 6300\, l_d \sin 195° = 0$

or $4000\, l_c = 1631\, l_d$

or $l_c = 0.4078\, l_d$

or $l_b + 250 = 0.4078\, l_d$

or $1.217\, l_d + 250 = 0.4078\, l_d$

or $0.8092\, l_d = -250$

or $l_d = -309$ mm

$l_b = 1.217\, l_d = 1.217 \times (-309) = -376$ mm

$l_c = l_b + 250 = -376 + 250 = -126$ mm

The correct positions of the planes have been shown in Figs. 14.11 (b) and (c).

To solve the problem graphically, $m_a \mathbf{r}_a$ is obtained from the vector sum of $m_b \mathbf{r}_b$, $m_c \mathbf{r}_c$ and $m_d \mathbf{r}_d$ [Fig. 14.11(d)]. On measuring,

$m_a \mathbf{r}_a = 2600$,

$$\therefore m_a = \frac{2600}{150} = \underline{17.3 \text{ kg}} \text{ and } \theta_a = \underline{294.5°}$$

Now, $m_a \mathbf{r}_a l_a = 4000 \times 250 = 1 \times 10^6$, taking B as the reference plane. Take the vector $m_c \mathbf{r}_c l_c$ and from its two ends, draw lines parallel to $m_a \mathbf{r}_a$ and $m_d \mathbf{r}_d$, Thus, forming a triangle [Fig. 14.11(e)]. Measuring the two sides,

$$m_a \mathbf{r}_a l_a = 985\,000,\ l_a = \frac{985\,000}{17.3 \times 150} = \underline{379 \text{ mm}}$$

$$m_d \mathbf{r}_d l_d = 437\,000,\ l_d = \frac{437\,000}{6300} = \underline{69 \text{ mm}}$$

l_a and l_d establish the relative positions of the planes.

14.5 FORCE BALANCING OF LINKAGES

Balancing of a linkage implies that the total centre of its mass remains stationary so that the vector sum of all the frame forces always remains zero. Figure 14.12 shows a four-link mechanism. a, b, c and d represent the magnitudes of the links AB, BC, CD and DA respectively. The link masses are m_a, m_b and m_c, located at G_a, G_b and G_c respectively. Let the coordinates g_i, ϕ_i describe the position of these points within each link.

As in any configuration of the mechanism, the links of the mechanism can be considered as vectors. Thus,

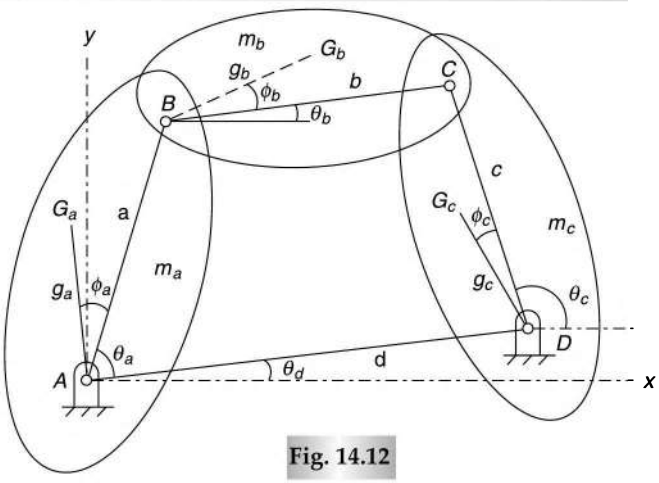

Fig. 14.12

$$ae^{i\theta_a} + be^{i\theta_b} - ce^{i\theta_c} - de^{i\theta_d} = 0 \tag{14.15}$$

or

$$e^{i\theta_b} = \frac{1}{b}(de^{i\theta_d} - ae^{i\theta_a} + ce^{i\theta_c}) \tag{14.15a}$$

Let G be the centre of mass for the system of moving links and let $\mathbf{g}$ define the position of G with respect to origin A.

Total mass of moving links, $m = m_a + m_b + m_c$ (14.16)

Then for the centre of mass of the entire system to remain stationary at a point, the following expression must be a constant (acceleration due to weight is constant).

$$m\mathbf{g} = m_a\mathbf{g}_a + m_b\mathbf{g}_b + m_c\mathbf{g}_c \tag{14.17}$$

where $\mathbf{g}_a$, $\mathbf{g}_b$ and $\mathbf{g}_c$ are the vectors representing the positions of masses m_a, m_b and m_c respectively, w.r.t. A.

$$m\mathbf{g} = m_a g_a e^{i(\theta_a+\varphi_a)} + m_b[ae^{i\theta_a} + g_b e^{i(\theta_b+\varphi_b)}] + m_c[de^{i\theta_d} + g_c e^{i(\theta_c+\varphi_c)}]$$
$$= m_a g_a e^{i\theta_a} e^{i\varphi_a} + m_b a e^{i\theta_a} + m_b g_b e^{i\theta_b} e^{i\varphi_b} + m_c d e^{i\theta_d} + m_c g_c e^{i\theta_c} e^{i\varphi_c}$$

Inserting the value of $e^{i\theta_b}$ from (14.15a)

$$mg = m_a g_a e^{i\theta_a} e^{i\varphi_a} + m_b a e^{i\theta_a} + m_b g_b \frac{1}{b}(de^{i\theta_d} - ae^{i\theta_a} + ce^{i\theta_c})e^{i\varphi_b} + m_c d e^{i\theta_d} + m_c g_c e^{i\theta_c} e^{i\varphi_c}$$
$$= \left(m_a g_a e^{i\varphi_a} + m_b a - m_b g_b \frac{a}{b} e^{i\varphi_b}\right)e^{i\theta_a} + \left(m_c g_c e^{i\varphi_c} + m_b g_b \frac{c}{b} e^{i\varphi_b}\right)e^{i\theta_c} + \left(m_c d + m_b g_b \frac{d}{b} e^{i\varphi_b}\right)e^{i\theta_d}$$

The centre of mass can be made stationary at the position $\mathbf{g} = \left(m_c d + m_b g_b \frac{d}{b} e^{i\varphi_b}\right)e^{i\theta_d}$

if the remaining two terms in the brackets can be made zero. Let the vector $\mathbf{g_a}'$ represent the position of the countermass m_a' to be added to the input link and vector $\mathbf{g_c}'$ represent the position of the countermass m_c' to be added to the output link to have complete force balancing.

Thus the equations may be written as

$$m_a g_a e^{i\varphi_a} + m_b a - m_b g_b \frac{a}{b} e^{i\varphi_b} + m_a' g_a' e^{i\varphi_a'} = 0 \tag{14.18}$$

and

$$m_c g_c e^{i\varphi_c} + m_b g_b \frac{c}{b} e^{i\varphi_b} + m_c' g_c' e^{i\varphi_c'} = 0 \tag{14.19}$$

from which magnitudes and the locations of the countermasses can be obtained.

Example 14.8 *The following data relate to a four-link mechanism:*

$a = 55$ mm	$m_a = 0.045$ kg
$b = 165$ mm	$m_b = 0.13$ kg
$c = 80$ mm	$m_c = 0.05$ kg
$d = 150$ mm	
$g_a = 28$ mm	$\phi_a = 0°$
$g_b = 85$ mm	$\phi_b = 15°$
$g_c = 42$ mm	$\phi_c = 0°$

Complete force balancing by adding countermasses to the input and the output links is desired. Determine the mass-distance values and angular position of each counter mass.

Solution We have

$$m_a g_a e^{i\varphi_a} + m_b a - m_b g_b \frac{a}{b} e^{i\varphi_b} + m_a' g_a' e^{i\varphi_a'} = 0$$

$$0.045 \times 0.028 \cos 0° + 0.13 \times 0.055 - 0.13 \times 0.085\ (0.055/0.165) \cos 15° + m_a' g_a' \cos \phi_a' = 0$$

$$0.001\,26 + 0.007\,15 - 0.003\,56 + m_a' g_a' \cos \phi_a' = 0$$

$$m_a' g_a' \cos \phi_a' = -0.004\,853 \qquad \text{(i)}$$

$$0.045 \times 0.028 \sin 0° - 0.13 \times 0.085\ (0.055/0.165) \sin 15° + m_a' g_a' \sin \phi_a' = 0$$

$$0 - 0.000\,954 + m_a' g_a' \sin \phi_a' = 0$$

$$m_a' g_a' \sin \phi_a' = 0.000\,954 \qquad \text{(ii)}$$

Squaring and adding (i) and (ii),

$$(m_a' g_a')^2 = 0.000\,024\,46$$

or $m_a' g_a' = \underline{0.004\,946 \text{ kg.m}}$

Dividing (ii) by (i),

$$\tan \phi_a' = \frac{0.000\,954}{-0.004\,853} = 0.1966$$

$$\phi_a' = \underline{168.9°}$$

$$m_c g_c e^{i\varphi_c} + m_b g_b \frac{c}{b} e^{i\varphi_b} + m_c' g_c' e^{i\varphi_c'} = 0$$

$$0.05 \times 0.042 \cos 0° + 0.13 \times 0.085\ (0.08/0.165) \cos 15° + m_c' g_c' \cos \phi_c' = 0$$

$$0.0021 + 0.005\,175 + m_c' g_c' \cos \phi_c' = 0$$

$$m_c' g_c' \cos \phi_c' = -0.007\,275 \qquad \text{(iii)}$$

$$0.05 \times 0.042 \sin 0° + 0.13 \times 0.085\ (0.08/0.165) \sin 15° + m_c' g_c' \sin \phi_c' = 0$$

$$0 + 0.001\,387 + m_c' g_c' \sin \phi_c' = 0$$

$$m_c' g_c' \sin \phi_c' = -0.001\,387 \qquad \text{(iv)}$$

Squaring and adding (iii) and (iv),

$$(m_c' g_c')^2 = 0.000\,063\,86$$

or $m_c' g_c' = \underline{0.007\,41 \text{ kg.m}}$

Dividing (iv) by (iii),

$$\tan \phi_c' = \frac{-.001\,387}{-.007\,275} = 0.190\,65$$

$$\phi_c' = \underline{190.8°}$$

Figure 14.13 shows the complete linkage with the two countermasses added.

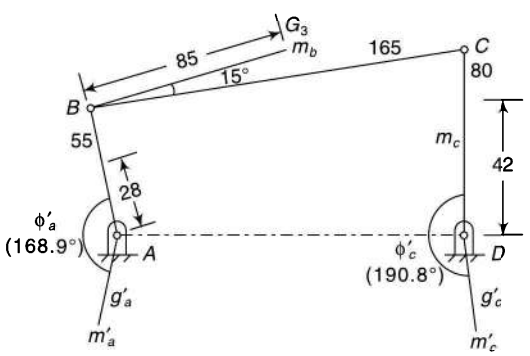

Fig. 14.13

14.6 BALANCING OF RECIPROCATING MASS

Acceleration of the reciprocating mass of a slider-crank mechanism is given by (refer Eq. 13.12)

$$f = r\omega^2\left(\cos\theta + \frac{\cos 2\theta}{n}\right)$$

Therefore, the force required to accelerate mass m is

$$F = mr\omega^2\left(\cos\theta + \frac{\cos 2\theta}{n}\right)$$

$$= mr\,\omega^2\cos\theta + mr\omega^2\frac{\cos 2\theta}{n} \tag{14.20}$$

$mr\omega^2\cos\theta$ is called the *primary accelerating force* and $mr\omega^2\dfrac{\cos 2\theta}{n}$ is called the *secondary accelerating force.*

Maximum value of the primary force = $mr\omega^2$

Maximum value of the secondary force = $\dfrac{mr\omega^2}{n}$

As n is, usually, much greater than unity, the secondary force is small compared with the primary force and can be safely neglected for slow-speed engines.

The inertia force due to primary accelerating force is shown in Fig. 14.14(a). In Fig. 14.14(b), the forces acting on the engine frame due to this inertia force are shown. The force exerted by the crankshaft on the main bearings has two components, $\mathbf{F}_{21}{}^h$ and $\mathbf{F}_{21}{}^v$. The horizontal force $\mathbf{F}_{21}{}^h$ is an unbalanced *shaking force.* The vertical forces $\mathbf{F}_{21}{}^v$ and $\mathbf{F}_{41}{}^v$ balance each other, but form an unbalanced *shaking couple.* The magnitude and direction of this force and couple go on changing with the rotation of the crank angle θ. The shaking force produces linear vibration of the frame in the horizontal direction whereas the shaking couple produces an oscillating vibration.

Thus, it is seen that the shaking

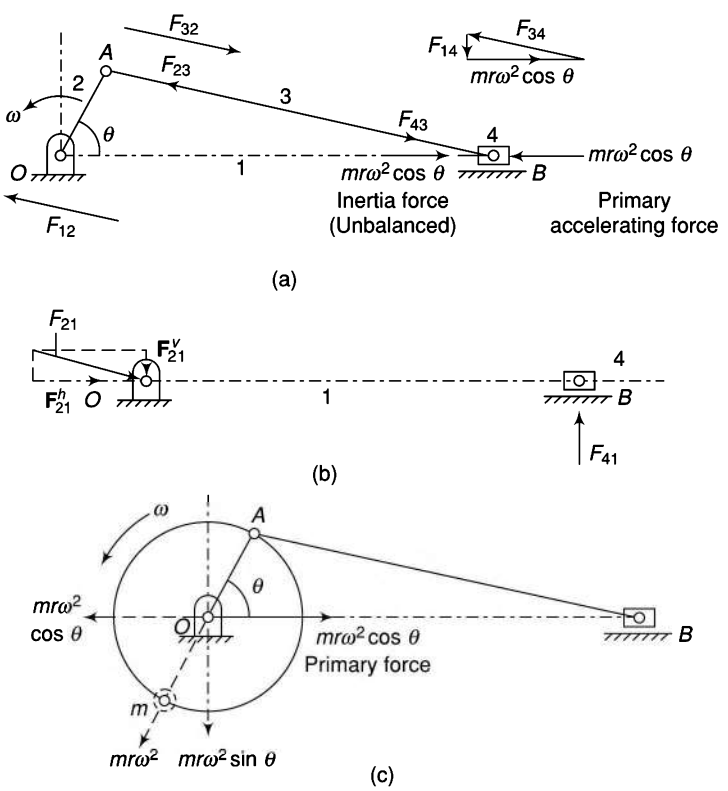

Fig. 14.14

force $\mathbf{F}_{21}{}^{h}$ is the only unbalanced force. It may hamper the smooth running of the engine and Thus, effort is made to balance the same. However, it is not at all possible to balance it completely and only some modification can be made.

The usual approach of balancing the shaking force is by addition of a rotating countermass at radius r directly opposite the crank which however, provides only a partial balance. This countermass is in addition to the mass used to balance the rotating unbalance due to the mass at the crank pin.

Figure 14.14(c) shows the reciprocating mechanism with a countermass m at the radial distance r. The horizontal component of the centrifugal force due to the balancing mass is $mr\omega^2 \cos\theta$ in the line of stroke. This neutralizes the unbalanced reciprocating force. But the rotating mass also has a component $mr\omega^2 \sin\theta$ perpendicular to the line of stroke which remains unbalanced. The unbalanced force is zero at the ends of the stroke when $\theta = 0°$ or $180°$ and maximum at the middle when $\theta = 90°$. The magnitude or the maximum value of the unbalanced force remains the same, i.e., equal to $mr\omega^2$. Thus, instead of sliding to and fro on its mounting, the mechanism tends to jump up and down.

To minimize the effect of the unbalanced force, a compromise is, usually, made, i.e., 2/3 of the reciprocating mass is balanced (or a value between one-half and three-quarters). If c is the fraction of the reciprocating mass Thus, balanced then

primary force balanced by the mass = $cmr\omega^2 \cos\theta$

primary force unbalanced by the mass = $(1 - c)cmr\omega^2 \cos\theta$

vertical component of centrifugal force which remains unbalanced

$$= cmr\omega^2 \sin\theta$$

In fact, in reciprocating engines, unbalanced forces in the direction of the line of stroke are more dangerous than the forces perpendicular to the line of stroke.

Resultant unbalanced force at any instant

$$= \sqrt{[(1-c)\,mr\omega^2 \cos\theta]^2 + [cmr\omega^2 \sin\theta]^2} \tag{14.21}$$

The resultant unbalanced force is minimum when $c = 1/2$.

The method just discussed above to balance the disturbing effect of a reciprocating mass is just equivalent to as if a revolving mass at the crankpin is completely balanced by providing a countermass at the same radius diametrically opposite the crank. Thus, if m_p is the mass at the crankpin and c is the fraction of the reciprocating mass m to be balanced, the mass at the crankpin may be considered as $(c_m + m_p)$ which is to be completely balanced.

Example 14.9 *The following data relate to a single-cylinder reciprocating engine:*

Mass of reciprocating parts = 40 kg
Mass of revolving parts = 30 kg at crank radius
Speed = 150 rpm
Stroke = 350 mm

If 60% of the reciprocating parts and all the revolving parts are to be balanced, determine the

(i) balance mass required at a radius of 320 mm

(ii) unbalanced force when the crank has turned 45° from the top-dead centre

Solution

$$\omega = \frac{2\pi \times 150}{60} = 15.7 \text{ rad/s}$$

$$r = \frac{350}{2} = 175 \text{ mm}$$

(i) Mass to be balanced at the crankpin = $cm + m_p$

$= 0.6 \times 40 + 30$

$= 54$ kg

$m_c r_c = mr$

$m_c \times 320 = 54 \times 175$

$m_c = 29.53$ kg

(ii) Unbalanced force (at $\theta = 45°$)

$$= \sqrt{[(1-c)\,mr\omega^2 \cos\theta]^2 + (cmr\omega^2 \sin\theta)^2}$$

$$= \sqrt{\begin{array}{l}[(1-0.6)\times 40\times 0.175\times (15.7)^2 \cos 45°]^2 \\ +[0.6\times 40\times 0.175\times (15.7)^2 \sin 45°]^2\end{array}}$$

$$= \underline{880.7 \text{ N}}$$

14.7 BALANCING OF LOCOMOTIVES

Locomotives are of two types, coupled and uncoupled. If two or more pairs of wheels are coupled together to increase the adhesive force between the wheels and the track, it is called a coupled locomotive. Otherwise, it is an uncoupled locomotive.

Locomotives usually have two cylinders. If the cylinders are mounted between the wheels, it is called an inside cylinder locomotive and if the cylinders are outside the wheels, it is an outside cylinder locomotive. The cranks of the two cylinders are set at 90° to each other so that the engine can be started easily after stopping in any position. Balance masses are placed on the wheels in both types.

In coupled locomotives, wheels are coupled by connecting their crankpins with coupling rods. As the coupling rod revolves with the crankpin, its proportionate mass can be considered as a revolving mass which can be completely balanced.

Thus, whereas in uncoupled locomotives, there are four planes for consideration, two of the cylinders and two of the driving wheels, in coupled locomotives there are six planes, two of cylinders, two of coupling rods and two of the wheels. The planes which contain the coupling rod masses lie outside the planes that contain the balance (counter) masses. Also, in case of coupled locomotives, the mass required to balance the reciprocating parts is distributed among all the wheels which are coupled. This results in a reduced hammer-blow (refer Sec. 14.8).

Locomotives have become obsolete nowadays.

14.8 EFFECTS OF PARTIAL BALANCING IN LOCOMOTIVES

1. Hammer-blow

Hammer-blow is the maximum vertical unbalanced force caused by the mass provided to balance the reciprocating masses. Its value is $mr\omega^2$. Thus, it varies as a square of the speed. At high speeds, the force of the hammer-blow could exceed the static load on the wheels and the wheels can be lifted off the rail when the direction of the hammer-blow will be vertically upwards.

2. Variation of Tractive Force

A variation in the tractive force (effort) of an engine is caused by the unbalanced portion of the primary force which acts along the line of stroke of a locomotive engine.

If c is the fraction of the reciprocating mass that is balanced then

unbalanced primary force for cylinder 1 $= (1-c)\,mr\omega^2 \cos\theta$

unbalanced primary force for cylinder 2 $= (1-c)\,mr\omega^2 \cos(90° + \theta)$

$= -(1-c)\,mr\omega^2 \sin\theta$

Total unbalanced primary force or the variation in the tractive force

$= -(1-c)\,mr\omega^2 (\cos\theta - \sin\theta)$

This is maximum when $(\cos\theta - \sin\theta)$ is maximum,

or when $\frac{d}{d\theta}(\cos\theta - \sin\theta) = 0$

or $-\sin\theta - \cos\theta = 0$

or $\sin\theta = -\cos\theta$

or $\tan\theta = -1$

or $\theta = 135°$ or $315°$

When $\theta = 135°$

maximum variation in tractive force

$$= (1-c)mr\omega^2(\cos 135° - \sin 135°)$$

$$= (1-c)mr\omega^2\left(\frac{1}{\sqrt{2}} - \frac{1}{\sqrt{2}}\right)$$

$$= -\sqrt{2}\,(1-c)mr\omega^2$$

When $\theta = 315°$

Maximum variation in tractive force

$$= (1-c)mr\omega^2(\cos 315° - \sin 315°)$$

$$= (1-c)mr\omega^2\left(\frac{1}{\sqrt{2}} + \frac{1}{\sqrt{2}}\right)$$

$$= \sqrt{2}\,(1-c)mr\omega^2$$

Thus, maximum variation

$$= \pm\sqrt{2}\,(1-c)mr\omega^2 \tag{14.22}$$

3. Swaying Couple

Unbalanced primary forces along the lines of stroke are separated by a distance l apart and Thus, constitute a couple (Fig. 14.15). This tends to make the leading wheels sway from side to side.

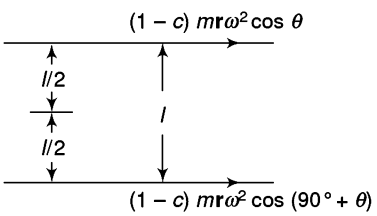

Fig. 14.15

Swaying couple = moments of forces about the engine centre line

$$= [(1-c)\,mr\omega^2\cos\theta]\frac{l}{2} - [(1-c)\,mr\omega^2\cos(90° + \theta)]\frac{l}{2}$$

$$= (1-c)\,mr\omega^2(\cos\theta + \sin\theta)\,\frac{l}{2}$$

This is maximum when $(\cos\theta + \sin\theta)$ is maximum.

i.e., when $\frac{d}{dt}(\cos\theta + \sin\theta) = 0$

or $-\sin\theta + \cos\theta = 0$

or $\sin\theta = \cos\theta$

or $\tan\theta = 1$

or $\theta = 45°$ or $225°$

When $\theta = 45°$, maximum swaying couple $= \frac{1}{\sqrt{2}}(1-c)\,mr\omega^2 l$

When $\theta = 225°$, maximum swaying couple $= -\frac{1}{\sqrt{2}}(1-c)\,mr\omega^2 l$

Thus, maximum swaying couple $= \pm\frac{1}{\sqrt{2}}(1-c)mr\omega^2 l$ (14.23)

Example 14.10 *The following data refer to a two-cylinder uncoupled locomotive:*

Rotating mass per cylinder	*= 280 kg*
Reciprocating mass per cylinder	*= 300 kg*
Distance between wheels	*= 1400 mm*
Distance between cylinder centres	*= 600 mm*
Diameter of treads of driving wheels	*= 1800 mm*
Crank radius	*= 300 mm]*
Radius of centre of balance mass	*= 620 mm*
Locomotive speed	*= 50 km/hr*
Angle between cylinder cranks	*= 90°*
Dead load on each wheel	*= 3.5 tonne*

Determine the

(i) balancing mass required in the planes of driving wheels if whole of the revolving and two-third of the reciprocating mass are to be balanced

(ii) swaying couple

(iii) variation in the tractive force

(iv) maximum and minimum pressure on the rails

(v) maximum speed of locomotive without lifting the wheels from the rails

Solution Total mass to be balanced $= m_p + cm$

$$= 280 + \frac{2}{3} \times 300$$

$$= 480 \text{ kg}$$

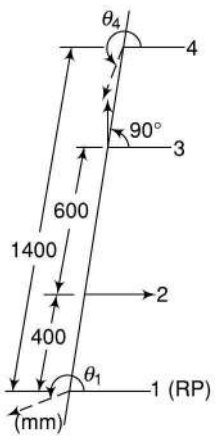

Fig. 14.16

(i) Take 1 as the reference plane and angle $\theta_2 = 0°$ (Fig.14.16). Writing the couple equations,

$$m_2 \mathbf{r}_2 l_2 \cos\theta_2 + m_3 \mathbf{r}_3 l_3 \cos\theta_3 + m_4 \mathbf{r}_4 l_4 \cos\theta_4 = 0$$

or $480 \times 300 \times 400 \cos 0° + 480 \times 300 \times 1000 \cos 90° + m_4 \times 620 \times 1400 \cos\theta_4 = 0$

or $m_4 \cos\theta_4 = -66.36$ (i)

and $m_2 \mathbf{r}_2 l_2 \sin\theta_2 + m_3 \mathbf{r}_3 l_3 \sin\theta_3 + m_4 \mathbf{r}_4 l_4 \sin\theta_4 = 0$

or $480 \times 300 \times 400 \sin 0° + 480 \times 300 \times 1000 \sin 90° + m_4 \times 620 \times 1400 \sin\theta_4 = 0$

or

$m_4 \sin\theta_4 = -165.9$ (ii)

Squaring and adding (i) and (ii), $m_4 = \underline{178.7 \text{ kg}}$

Dividing (ii) by (i), $\tan\theta_4 = \dfrac{-165.9}{-66.36} = 2.5$

$$\theta_4 = \underline{248.2°}$$

Taking 4 as the reference plane and writing the couple equations,

$$m_2 \mathbf{r}_2 l_2 \cos\theta_2 + m_3 \mathbf{r}_3 l_3 \cos\theta_3 + m_1 \mathbf{r}_1 l_1 \cos\theta_1 = 0$$

$480 \times 300 \times 1000 \cos 0° + 480 \times 300 \times 400 \cos 90° + m_1 \times 620 \times 1400 \sin\theta_1 = 0$

or

$m_1 \sin\theta_1 = -165.9$ (iii)

Similarly, $m_1 \sin\theta_1 = -66.36$ (iv)

From (iii) and (iv), $m_1 = \underline{178.7 \text{ kg}} = m_4$

$\tan\theta_1 = \dfrac{-66.36}{-165.9} = 0.4$ or $\theta_1 = \underline{201.8°}$

The treatment shows that the magnitude of m_1 could have directly been written equal to m_4.

(ii) $\omega = \dfrac{50 \times 1000 \times 1000}{60 \times 60} \times \dfrac{1}{\frac{1800}{2}} = 15.43$ rad/s

Swaying couple $= \pm \dfrac{1}{\sqrt{2}} (1 - c)\, mr\omega^2 I$

$$= \pm \frac{1}{\sqrt{2}} \left(1 - \frac{2}{3}\right) \times 300 \times 0.3 \times (15.43)^2 \times 0.6$$

$= \underline{3030.3 \text{ N.m}}$

(iii) Variation in tractive force $= \pm\sqrt{2}(1 - c) mr\omega^2$

$$= \pm\sqrt{2} \left(1 - \frac{2}{3}\right) \times 300 \times 0.3 \times (15.43)^2$$

$= \underline{10\ 100 \text{ N}}$

(iv) Balance mass for reciprocating parts only

$$= 178.7 \times \frac{\frac{2}{3} \times 300}{480} = 74.46 \text{ kg}$$

Hammer-blow = $mr\omega^2$

$= 74.46 \times 0.62 \times (15.43)^2$

$= 10\,991$ N

Dead load = $3.5 \times 1000 \times 9.81 = 34\,335$ N

Maximum pressure on rails

$= 34\,335 + 10\,991 = \underline{45\,326 \text{ N}}$

Minimum pressure on rails

$= 64\,335 - 10\,991 = \underline{23\,344 \text{ N}}$

(v) Maximum speed of the locomotive without lifting the wheels from the rails will be when the dead load becomes equal to the hammer-blow.

i.e., $74.46 \times 0.62 \times \omega^2 = 34\,335$

or $\omega = 27.27$ rad/s

Velocity of wheels

$$= \omega r = \left(27.27 \times \frac{1.80}{2}\right) \text{m/s}$$

$$= \left(27.27 \times \frac{1.8}{2} \times \frac{60 \times 60}{1000}\right) \text{km/h}$$

$= 88.36$ km/h

Example 14.11 *The following data refer to a four-coupled wheel locomotive with two inside cylinders:*

Pitch of cylinders	= *600 mm*
Reciprocating mass/cylinder	= *315 kg*
Revolving mass/cylinder	= *260 kg*
Distance between driving wheels	= *1.6 m*
Distance between coupling rods	= *2 m*
Diameter of driving wheels	= *1.9 m*
Revolving parts for each coupling rod crank	= *130 kg*
Engine crank radius	= *300 mm*
Coupling rod crank radius	= *240 mm*
Distance of centre of balance mass in planes of Driving wheels from axle centre	= *750 mm*
Angle between engine cranks	= *90°*
Angle between coupling rod crank with adjacent engine crank	= *180°*

The balanced mass required for the reciprocating parts is equally divided between each pair of coupled wheels. Determine the

(i) magnitude and position of the balance mass required to balance two-third of reciprocating and whole of the revolving parts

(ii) hammer-blow and the maximum variation of tractive force when the locomotive speed is 80 km/h

Solution *Leading wheels* Balance mass on each leading wheel

$$= m_p + \frac{1}{2} cm$$

$$= 260 + \frac{1}{2}\left(\frac{2}{3} \times 315\right)$$

$= 365$ kg

Taking the plane 2 as the reference plane and

$\angle \theta_3 = 0°$ [refer Fig.14.17]

$m_1 = m_6 = 130$ kg; $m_3 = m_4 = 365$ kg

$r_1 = r_6 = 0.24$ m; $r_2 = r_5 = 0.75$ m; $r_3 = r_4 = 0.3$ m

$l_1 = -0.2$ m; $l_3 = 0.5$ m; $l_4 = 1.1$ m; $l_5 = 1.6$ m; $l_6 = 1.8$ m

$m_1 r_1 l_1 = 130 \times 0.24 \times (-0.2) = -6.24$

$m_3 r_3 l_3 = 365 \times 0.3 \times 0.5 = 54.75$

$m_4 r_4 l_4 = 365 \times 0.3 \times 1.1 = 120.45$

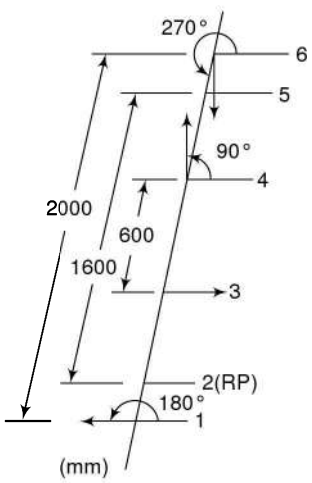

Fig. 14.17

$m_5 r_5 l_5 = m_5 \times 0.75 \times 1.6 = 1.2\, m_5$

$m_6 r_6 l_6 = 130 \times 0.24 \times 1.8 = 56.16$

$$1.2m_5 = \begin{bmatrix} (-6.24\cos 180° + 54.75\cos 0° \\ +120.45\cos 90° + 56.16\cos 270°)^2 \\ +(-6.24\sin 180° + 54.75\sin 0° + 120.45 \\ \sin 90° + 56.16\sin 270°)^2 \end{bmatrix}^{1/2}$$

$= [(60.99)^2 + (64.29)^2]^{1/2}$

$= 88.62$

$m_5 = \underline{73.85 \text{ kg}}$

$$\tan\theta_5 = \frac{-64.29}{-60.99} = 1.054 \text{ or } \theta_5 = \underline{226.5°}$$

From symmetry of the system, $m_2 = m_5$ $\underline{73.85 \text{ kg}}$

$$\text{and } \tan\theta_2 = \frac{-60.99}{-64.29} = 0.949 \text{ or } \theta_2 = \underline{223.5°}$$

Trailing Wheels The arrangement remains the same except that only half of the required reciprocating masses have to be balanced at the cranks.

i.e., $$m_3 = m_4 = \frac{1}{2}\left(\frac{2}{3} \times 315\right) = 105 \text{ kg}$$

Then, $m_3 r_3 l_3 = 105 \times 0.3 \times 0.5 = 15.75$

and $m_4 r_4 l_4 = 105 \times 0.3 \times 1.1 = 34.65$

$$1.2m_5 = \begin{bmatrix} (-6.24\cos 180° + 15.75\cos 0° \\ +34.65\cos 90° + 56.16\cos 270°)^2 \\ +(-6.24\sin 180° + 15.75\sin 0° + 34.65 \\ \sin 90° + 56.16\sin 270°)^2 \end{bmatrix}^{1/2}$$

$= [(21.99)^2 + (-21.51)^2]^{1/2}$

$= 30.76$

$m_5 = 25.63$ kg

$$\tan\theta_5 = \frac{-(-21.51)}{-21.99} = \frac{+21.51}{-21.99} = -0.978$$

or $\theta_5 = \underline{135.4°}$

By symmetry, $m_2 = m_5 = \underline{25.63 \text{ kg}}$

$$\text{and } \tan\theta_2 = \frac{-21.99}{+21.51} = -1.022 \text{ or } \theta_2 = \underline{314.4°}$$

(ii) Hammer–blow $= mr\omega$

where m is the balance mass for reciprocating parts only and neglecting m_1 and m_6 in the above calculations.

Thus, $m_1 r_1 l_1 = m_6 r_6 l_6 = 0$

$$1.2m_5 = \begin{bmatrix} (15.75\cos 0° + 34.65\cos 90°)^2 \\ +(15.75\sin 0° + 34.65\sin 90°) \end{bmatrix}^{1/2}$$

$= [(15.75)^2 + (34.65)^2]^{1/2}$

$= 38.06$

$m_5 = 31.75$ kg

$$\omega = \frac{80 \times 1000}{60 \times 60} \times \frac{1}{1.9/2} = 23.39 \text{ rad/s}$$

Hammer-blow $= 31.72 \times 0.75 \times (23.39)^2 = 13\ 015$ N

Maximum variation of tractive force

$= \pm\sqrt{2}(1 - c)mr\omega^2$

$$= \pm\sqrt{2}\left(1 - \frac{2}{3}\right) \times 315 \times 0.3 \times (23.39)^2$$

$= \pm\ \underline{24\ 372 \text{ N}}$

14.9 SECONDARY BALANCING

It was stated earlier that the secondary acceleration force is defined as

$$\text{secondary force} = mr\omega^2 \frac{\cos 2\theta}{n} \tag{14.24}$$

Its frequency is twice that of the primary force and the magnitude $1/n$ times the magnitude of the primary force.

The expression can also be written as $mr\,(2\omega)^2 \dfrac{\cos 2\theta}{4n}$

Now, consider two cranks of an engine (Fig. 14.18). One actual one and the other imaginary, with the following specifications:

	Actual	Imaginary
Angular velocity	ω	2ω
Length of crank	r	$\dfrac{r}{4n}$
Mass at the crank pin	m	m

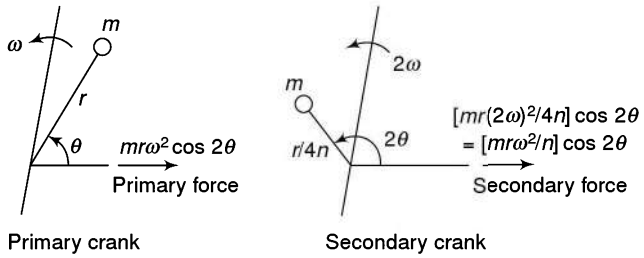

Fig. 14.18

Thus, when the actual crank has turned through an angle $\theta = \omega t$, the imaginary crank would have turned an angle of $2\theta = 2\omega t$

Centrifugal force induced in the imaginary crank $= \dfrac{mr(2\omega)^2}{4n}$

Component of this force along line of stroke $= \dfrac{mr(2\omega)^2}{4n} \cos 2\theta$

Thus, the effect of the secondary force is equivalent to an imaginary crank of length $r/4n$ rotating at double the angular velocity, i.e., twice of the engine speed.

The imaginary crank coincides with the actual at inner top-dead centre. At other times, it makes an angle with the line of stroke equal to twice that of the engine crank.

The secondary couple about a reference plane is given by the multiplication of the secondary force with the distance l of the plane from the reference plane.

Complete Balancing of Reciprocating Parts

From the foregoing discussion, it is concluded that for complete balancing of the reciprocating parts, the following conditions must be fulfilled:

1. Primary forces must balance, i.e., primary force polygon is enclosed.
2. Primary couples must balance, i.e., primary couple polygon is enclosed.
3. Secondary forces must balance, i.e., secondary forces polygon is enclosed.
4. Secondary couples must balance, i.e., secondary couple polygon is enclosed.

Usually, it is not possible to satisfy all the above conditions fully for a multicylinder engine. Mostly some unbalanced force or couple would exist in the reciprocating engines.

14.10 BALANCING OF INLINE ENGINES

If a reciprocating mass is transferred to the crankpin, the axial component parallel to the cylinder axis of the resulting centrifugal force represents the primary unbalanced force.

Consider a shaft (Fig. 14.19) consisting of three equal cranks unsymmetrically spaced. The crankpins carry equivalents of three unequal reciprocating masses. Then

Primary force $= \sum mr\omega^2 \cos\theta$ (14.25)

Primary couple $= \sum mr\omega^2 l \cos\theta$ (14.26)

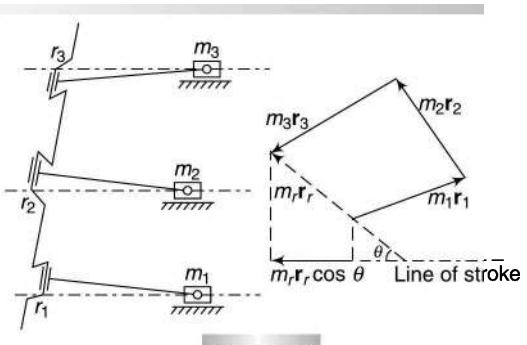

Fig. 14.19

$$\text{Secondary force} = \sum mr\frac{(2\omega)^2}{4n}\cos 2\theta = \sum mr\frac{\omega^2}{n}\cos 2\theta \tag{14.27}$$

$$\text{Secondary couple} = \sum mr\frac{(2\omega)^2}{4n}l\cos 2\theta = \sum mr\frac{\omega^2}{n}l\cos 2\theta \tag{14.28}$$

In order to solve the above equations graphically, first draw the $\sum mr \cos\theta$ polygon (ω^2 is common to all forces). Then the axial component of the resultant force ($\mathbf{F}_r \cos\theta$) multiplied by ω^2 provides the primary unbalanced force on the system at that moment. This unbalanced force is zero when $\theta = 90°$ and a maximum when $\theta = 0°$.

In case the force polygon encloses, the resultant as wall as the axial component will always be zero and Thus, the system will be in primary balance. Then $\sum \mathbf{F}_{ph} = 0$ and $\sum \mathbf{F}_{pv} = 0$.

To find the secondary unbalance force, first find the positions of the imaginary secondary cranks. Then transfer the reciprocating masses and multiply the same by $(2\omega)^2/4n$ or ω^2/n to get the secondary force.

In the same way primary and secondary couple (mrl) polygons can be drawn for primary and secondary couples.

In the following paragraphs, some multi-crank arrangements have been examined.

1. In-line Two-cylinder Engine

Consider a two-cylinder engine (Fig. 14.20), cranks of which are 180° apart and have equal reciprocating masses. Taking a plane through the centre line as the reference plane,

Primary force = $mr\omega^2 [\cos\theta + \cos(180° + \theta)] = 0$

$$\text{Primary couple} = mr\omega^2\left[\frac{l}{2}\cos\theta + \left(-\frac{l}{2}\right)\cos(180° + \theta)\right] = mr\omega^2 l\cos\theta$$

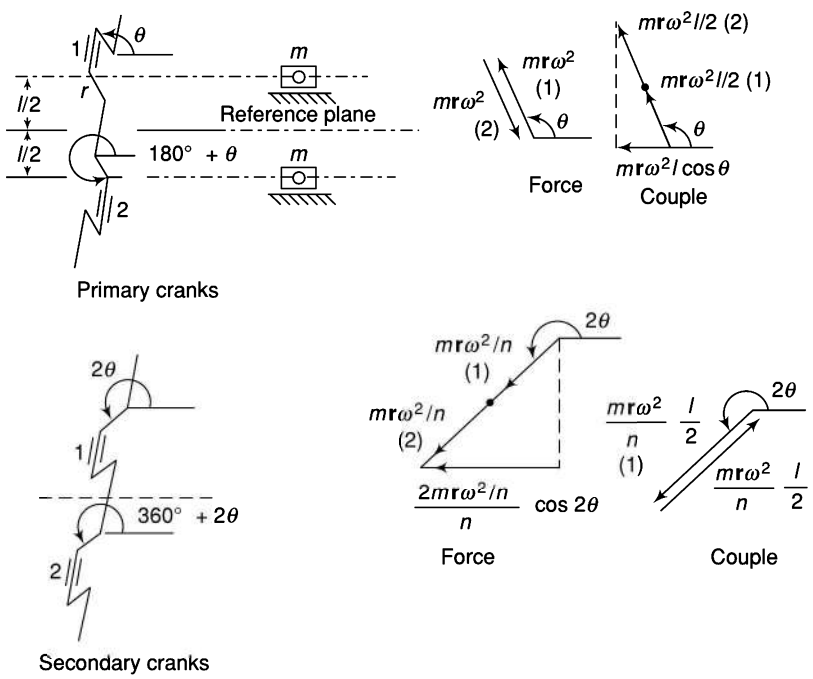

Fig. 14.20

Maximum values are $mr\omega^2 l$ at $\theta = 0°$ and 180°

$$\text{Secondary force} = \frac{mr\omega^2}{n}[\cos 2\theta + \cos(360° + 2\theta)] = 2\frac{mr\omega^2}{n}\cos 2\theta$$

Maximum values are $\dfrac{2mr\omega^2}{n}$ when $2\theta = 0°$, 180°, 360° and 540°

or $\theta = 0°$, 90°, 180°, and 270°

$$\text{Secondary couple} = \frac{mr\omega^2}{n}\left[\frac{l}{2}\cos 2\theta + \left(-\frac{l}{2}\right)\cos(360° + 2\theta)\right] = 0$$

Remember that to find the primary forces and couples analytically, the positions of the cranks have to be taken in terms of θ. As it is a rotating system, the maximum values or magnitudes of these forces and couples vary instant to instant and are equal to the values as given by the equivalent rotating masses at the crank pin. If a particular position of the crankshaft is considered, the above expressions may not give the maximum value. For example, the maximum value of primary couple in this case is found to be $mr\omega^2.l$. This is the value which is obtained when the crank positions are 0° and 180°. However, if the crank positions are assumed at 90° and 270°, the values obtained are zero. Thus, in case any particular position of the crankshaft is considered, then both x- and y-components of the force and couple can be taken to find the maximum values, e.g., if the positions of the cranks are considered at 120° and 300°, the primary couple can be obtained as below:

$$x\text{-component} = mr\omega^2\left[\frac{l}{2}\cos 120° + \left(-\frac{l}{2}\right)\cos(180° + 120°)\right] = -\frac{1}{2}mr\omega^2 l$$

$$y\text{-component} = mr\omega^2\left[\frac{l}{2}\sin 120° + \left(-\frac{l}{2}\right)\sin(180° + 120°)\right] = \frac{\sqrt{3}}{2}mr\omega^2 l$$

$$\text{Primary couple} = \sqrt{\left(-\frac{1}{2}mr\omega^2 l\right)^2 + \left(\frac{\sqrt{3}}{2}mr\omega^2 l\right)^2} = mr\omega^2 l$$

The graphical solution has also been shown in Fig. 14.20 which is self-explanatory.

2. In-line Four-cylinder Four-stroke Engine

Such an engine has two outer as well as inner cranks (throws) in line. The inner throws are at 180° to the outer throws. Thus the angular positions for the cranks are θ for the first, (180° + θ) for the second, (180° + θ) for the third, and θ for the fourth (Fig. 14.21).

Crankshaft of a four-cylinder engine

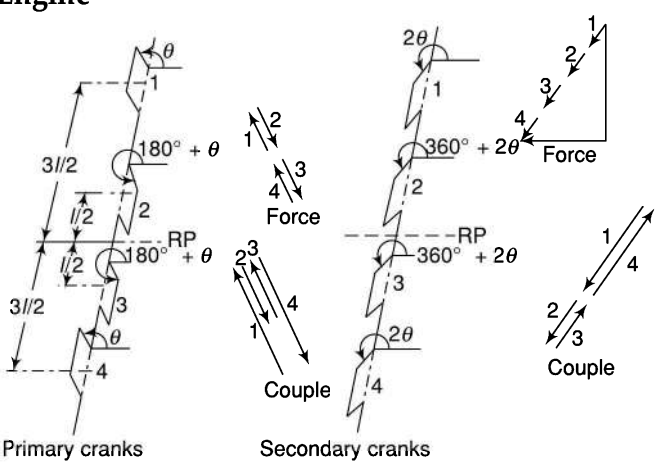

Fig. 14.21

For convenience, choose a plane passing through the middle bearing about which the arrangement is symmetrical as the reference plane.

Primary force

$= mr\omega^2 [\cos\theta + \cos(180° + \theta) + \cos(180° + \theta) + \cos\theta] = 0$

Primary couple

$$= mr\omega^2 \left[\frac{3l}{2}\cos\theta + \frac{l}{2}\cos(180° + \theta) + \left(-\frac{l}{2}\right)\cos(180° + \theta) + \left(-\frac{3l}{2}\right)\cos\theta\right]$$

$$= 0$$

Secondary force

$$= \frac{mr\omega^2}{n}[\cos 2\theta + \cos(360° + 2\theta) + \cos(360° + 2\theta) + \cos 2\theta]$$

$$= \frac{4mr\omega^2}{n}\cos 2\theta$$

Maximum value $= \dfrac{4mr\omega^2}{n}$ at $2\theta = 0°$, 180°, 360° and 540° or $\theta = 0°$, 90°, 180° and 270°

Secondary couple

$$= \frac{mr\omega^2}{n}\left[\frac{3l}{2}\cos 2\theta + \frac{l}{2}\cos(360° + 2\theta) + \left(-\frac{l}{2}\right)\cos(360° + 2\theta) + \left(-\frac{3l}{2}\right)\cos 2\theta\right]$$

$$= 0$$

Graphical solution has been shown in Fig. 14.21. Thus this engine is not balanced in secondary forces.

3. Six-cylinder Four-stroke Engine

Only a graphical solution is being given for simplicity. In a four-stroke engine, the cycle is completed in two revolutions of the crank and the cranks are 120° apart.

Crank positions for different cylinders for the firing order 142635 for clockwise rotation of the crankshaft are

For first, $\theta = 0°$ For fourth, $\theta = 120°$
For second, $\theta = 240°$ For fifth, $\theta = 240°$
For third, $\theta = 120°$ For sixth, $\theta = 0°$

Assuming m and r equal for all cylinders and taking a vertical plane passing through the middle of the shaft as the reference plane, the force and the couple polygons are drawn as shown in Fig. 14.22.

Since all the force and couple polygons close, it is an inherently balanced engine for primary and secondary forces and couples.

Crankshaft of a six-cylinder engine

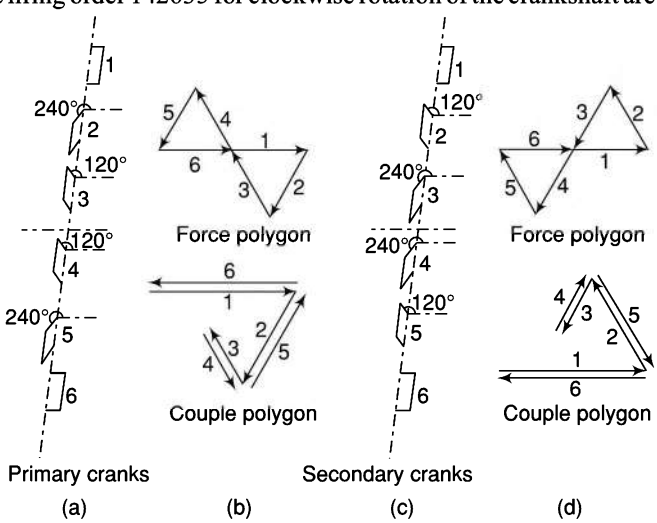

Fig. 14.22

Example 14.12 *A four-cylinder oil engine is in complete primary balance. The arrangement of the reciprocating masses in different planes is as shown in Fig.14.23(a). The stroke of each piston is 2r mm. Determine the reciprocating mass of the cylinder 2 and the relative crank positions.*

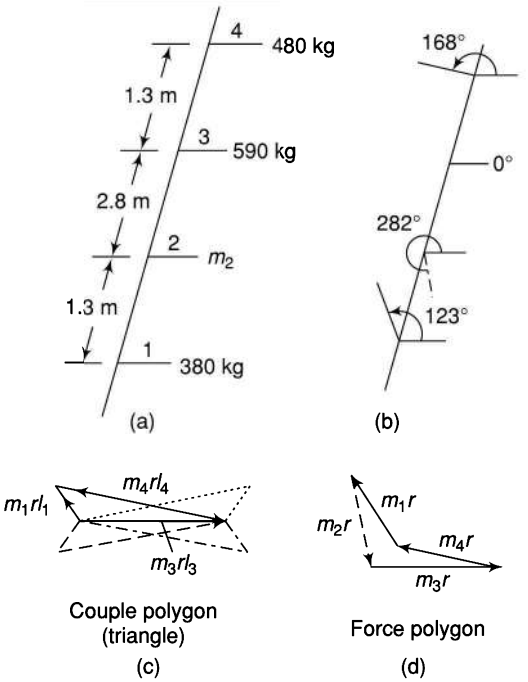

Fig. 14.23

Solution Crank length = $2r/2 = r$

Take 2 as the reference plane and $\theta_3 = 0°$

$m_1r_1l_1 = 380\,r \times (-1.3) = -494r \qquad m_1r_1 = 380\,r$

$m_3r_3l_3 = 590\,r \times 2.8 = 1652r \qquad m_3r_3 = 590\,r$

$m_4r_4l_4 = 480\,r \times (2.8 + 1.3) = 1968r \quad m_4r_4 = 480\,r$

$-494\,r\cos\theta_1 + 1652\,r\cos 0° + 1968\,r\cos\theta_4 = 0$

or $\quad 494\cos\theta_1 = 1652 + 1968\cos\theta_4 \qquad$ (i)

and $\quad -494\,r\sin\theta_1 + 1652\,r\sin 0° + 1668\,r\sin\theta_4 = 0$

or $\quad 494\sin\theta_1 = 1968\sin\theta_4 \qquad$ (ii)

Squaring and adding (i) and (ii),

$(494)^2 = (1652 + 1968\cos\theta_4)^2 + (1968\sin\theta_4)^2$

$= (1652)^2 + (1968)^2\cos^2\theta_4 + 2 \times 1652 \times 1968\cos\theta_4 + (1968)^2\sin^2\theta_4$

$= (1652)^2 + (1968)^2 + 2 \times 1652 \times 1968\cos\theta_4$

$\cos\theta_4 = -0.978$

or $\theta_4 = 167.9°$ or $192.1°$

Choosing one value, say $\theta_4 = \underline{167.9°}$

Dividing (ii) by (i), $\tan\theta_1 = \dfrac{1968\sin 167.9°}{1652 + 1968\cos 167.9°}$

$= \dfrac{+412.53}{-272.28}$

$= -1.515$

$\theta_1 = 123.4°$

Writing the force equation, (r is common),

$380\cos 123.4° + m_2\cos\theta_2 + 590\cos 0° + 480\cos 167.9° = 0$

or $\quad m_2\cos\theta_2 = 88.5 \qquad$ (iii)

and $\quad 380\sin 123.4° + m_2\sin\theta_2 + 590\sin 0° + 480\sin 167.9° = 0$

or $\quad m_2\sin\theta_2 = -417.9 \qquad$ (iv)

Squaring and adding (iii) and (iv), $m_2 = \underline{427.1\text{ kg}}$

Dividing (iii) by (iv), $\tan\theta_2 = \dfrac{-417.9}{+88.5} = -4.72$

or $\quad \theta_2 = \underline{282°}$

Figure 14.23(b) shows the relative crank positions.

Had we chosen $\theta_4 = 192.1°$, a different set of values of m_2, θ_1 and θ_2 would have come.

To solve the problem graphically, draw the couple polygon (triangle) as shown in Fig. 14.23(c) from the three known values. This provides the relative direction of the masses m_1, m_3 and m_4. Now, complete the force polygon [Fig. 14.23(d) and obtain the magnitude and direction of m_2. The results obtained are $\theta_4 = 168°$, $\theta_1 = 123°$, $\theta_2 = 282°$.

Also, $m_2r = 427r$ or $m_2 = 427$ kg

Note that the couple triangle can be drawn in more than one way. However, only two sets of answers are obtained. Also, $m_1\mathbf{r}_1l_1$ is negative and, therefore, its direction is reversed in the diagram.

Example 14.13 *The arrangement of the cranks of a 4-crank symmetrical engine is shown in Fig.14.24. The reciprocating masses at cranks 1 and 4 are each equal to m_1 and of the cranks 2 and 3 are each equal to m_2. Show that the arrangement is balanced for primary forces and couples and for secondary forces if*

$$\frac{m_1}{m_2} = \frac{\cos\beta}{\cos\alpha}, \frac{l_1}{l_2} = \frac{\tan\beta}{\tan\alpha}, \cos\alpha\cos\beta = \frac{1}{2}$$

Determine also the magnitude of the out-of balance secondary couple if the system rotates at ω rad/s.

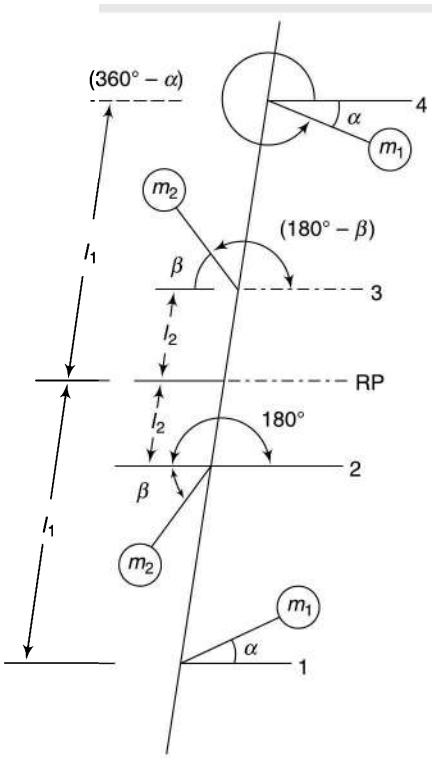

Fig. 14.24

Solution As particular positions of the cranks are being considered, horizontal and vertical components of primary and secondary forces and couples must be taken.

(i) Primary Forces

$$\Sigma F_{ph} = r\omega^2 \begin{bmatrix} m_1 \cos\alpha + m_2 \cos(180° + \beta) \\ +m_2 \cos(180° - \beta) \\ +m_1 \cos(180° - \alpha) \end{bmatrix}$$

$$= 2r\,\omega^2\,[m_1 \cos\alpha - m_2 \cos\beta]$$

$$\Sigma F_{pv} = r\omega^2 \begin{bmatrix} m_1 \sin\alpha + m_2 \sin(180° + \beta) + m_2 \\ \sin(180° - \beta) + m_2 \sin(360° - \alpha) \end{bmatrix}$$

$$= 0$$

For primary balance of forces, $\Sigma \mathbf{F}_{ph}$ must be zero,

i.e., $m_1 \cos\alpha - m_2 \cos\beta = 0$

or $$\frac{m_1}{m_2} = \frac{\cos\beta}{\cos\alpha}$$

(ii) Primary Couples Take reference plane at the middle of shaft about which the system is symmetrical.

$$\Sigma C_{ph} = r\omega^2 \begin{bmatrix} m_1(-l_i)\cos\alpha + m_2(-l_2) \\ \cos(180° + \beta) + m_2(l_2) \\ \cos(180° - \beta) + m_1(l_1) \\ \cos(360° - \alpha) \end{bmatrix}$$

$$= r\,\omega^2\,[-m_1 l_1 \cos\alpha + m_2 l_2 \cos\beta - m_2 l_2 \cos\beta + m_1 l_1 \cos\alpha]$$

$$= 0$$

$$C_{pv} = r\omega^2 \begin{bmatrix} m_1(-l_i)\sin\alpha + m_2(-l_2) \\ \sin(180° + \beta) + m_2(-l_2) \\ \sin(180° - \beta) + m_1(-l_1) \\ \sin(360° - \alpha) \end{bmatrix}$$

$$= 2r\,\omega^2\,[m_2 l_2 \sin\beta - m_1 l_1 \sin\alpha]$$

Thus for balancing of primary couples,

$$m_2 l_2 \sin\beta - m_1 l_1 \sin\alpha = 0$$

or $$\frac{l_1}{l_2} = \frac{m_2 \sin\beta}{m_1 \sin\alpha} = \frac{\cos\alpha \sin\beta}{\cos\beta \sin\alpha} = \frac{\tan\beta}{\tan\alpha}$$

(iii) Secondary Forces

$$\Sigma F_{sh} = \frac{r\omega^2}{n} \begin{bmatrix} m_1 \cos 2\alpha + m_2 \cos 2(180° + \beta) \\ + m_2 \cos 2(180° - \beta) \\ + m_1 \cos 2(360° - \alpha) \end{bmatrix}$$

$$= \frac{r\omega^2}{n}[m_1 \cos 2\alpha + m_2 \cos 2\beta + m_2 \cos 2\beta + m_1 \cos 2\alpha]$$

$$= \frac{2r\omega^2}{n}[m_1 \cos 2\alpha + m_2 \cos 2\beta]$$

$$\Sigma F_{sv} = \frac{r\omega^2}{n} \begin{bmatrix} m_1 \sin 2\alpha + m_2 \sin 2(180° + \beta) + m_2 \\ \sin 2(180° - \beta) + m_1 \sin 2(360° - \alpha) \end{bmatrix}$$

$$= \frac{r\omega^2}{n}[m_1 \sin 2\alpha + m_2 \sin 2\beta - m_2 \sin 2\beta - m_1 \sin 2\alpha]$$

$$= 0$$

For the balancing of secondary forces,

$$m_1 \cos 2\alpha + m_2 \cos 2\beta = 0$$

or $\dfrac{m_1}{m_2} \cos \alpha + \cos 2\beta = 0$

or $\dfrac{\cos \beta}{\cos \alpha} (2 \cos^2 \alpha - 1) + (2 \cos^2 \beta - 1) = 0$

or $2\cos\beta\cos^2\alpha = \cos\beta + 2\cos^2\beta\cos\alpha - \cos\alpha = 0$

or $2\cos\beta\cos\alpha(\cos\alpha + \cos\beta) - (\cos\alpha + \cos\beta) = 0$

or $(2 \cos \alpha + \cos \beta)(2 \cos \beta \cos \alpha - 1) = 0$

As $\cos \alpha + \cos \beta \neq 0$,

$\therefore \quad 2 \cos \beta \cos \alpha - 1 = 0$

or $\cos \alpha \cos \beta = \dfrac{1}{2}$

(iv) Secondary Couples

$$\Sigma C_{sh} = \frac{r\omega^2}{n} \begin{bmatrix} m_1(-l_i)\cos 2\alpha + m_2(-l_2) \\ \cos 2(180° + \beta) + m_2(l_2) \\ \cos 2(180° - \beta) + m_1(l_1) \\ \cos 2(360° - \alpha) \end{bmatrix}$$

$$= \frac{r\omega^2}{n}[-m_1 l_1 \cos 2\alpha - m_2 l_2 \cos 2\beta + m_2 l_2 \cos 2\beta + m_1 l_1 \cos 2\alpha]$$

$$= 0$$

$$\Sigma C_{sv} = \frac{r\omega^2}{n} \begin{bmatrix} m_1(-l_i)\sin 2\alpha + m_2(-l_2) \\ \sin 2(180° + \beta) + m^2(l_2) \\ \sin 2(180° - \beta) + m_1(l_1) \\ \sin 2(360° - \alpha) \end{bmatrix}$$

$$= \frac{2r\omega^2}{n}[-m_1 l_1 \sin 2\alpha - m_2 l_2 \sin 2\beta]$$

Out of balance secondary couple

$$= \frac{2r\omega^2}{n}[m_1 l_1 \sin 2\alpha + m_2 l_2 \sin 2\beta]$$

Graphical Solution

From the polygon of primary forces (Fig. 14.25),

$$m_1 \cos \alpha = m_2 r \cos \beta$$

or $\dfrac{m_1}{m_2} = \dfrac{\cos \beta}{\cos \alpha}$

From the polygon of primary couples,

$$m_2 l_2 \sin \beta = m_1 l_1 \sin \alpha$$

or $\dfrac{l_1}{l_2} = \dfrac{m_2 \sin \beta}{m_1 \sin \alpha} = \dfrac{\cos \alpha \sin \beta}{\cos \beta \sin \alpha} = \dfrac{\tan \beta}{\tan \alpha}$

From the polygon of secondary forces,

$$m_1 \cos 2\alpha = -m_2 \cos 2\beta$$

or $m_1 \cos 2\alpha + m_2 \cos 2\beta = 0$

Simplifying as in (iii) of analytical solution above ,

$$\cos \alpha \cos \beta = \frac{1}{2}$$

From the polygon of secondary couples,

Resultant $mrl = m_1 r l_1 \sin 2\alpha + m_2 r l_1 \sin (180° - 2\beta) + m_2 r l_1 \sin (180° - 2\beta) + m_1 r l_1 \sin 2\alpha$

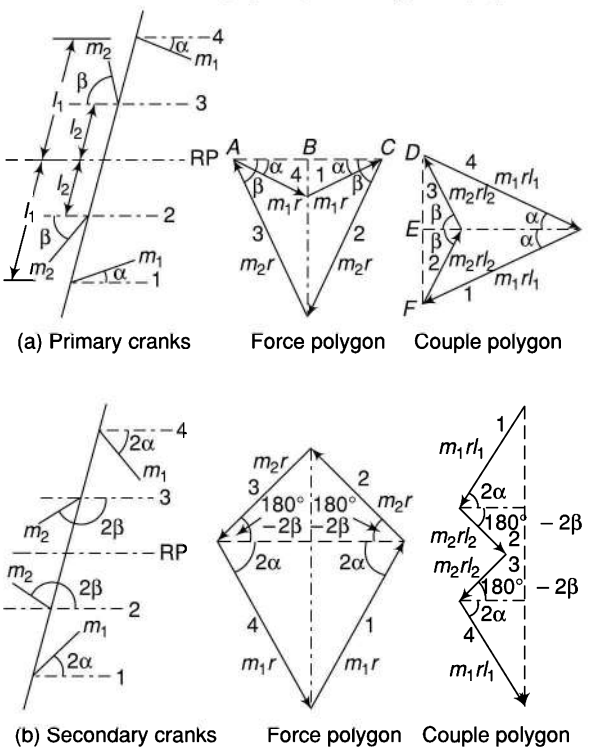

Fig. 14.25

or out of balance secondary couple

$$= \frac{2r\omega^2}{n}[m_1 l_1 \sin 2\alpha + m_2 l_2 \sin 2\beta]$$

Example 14.14 *Each crank and the connecting rod of a four-crank in-line engine are 200 mm and 800 mm respectively. The outer cranks are set at 120° to each other and each has a reciprocating mass of 200 kg. The spacing between adjacent planes of cranks are 400 mm, 600 mm and 500 mm. If the engine is in complete primary balance, determine the reciprocating masses of the inner cranks and their relative angular positions. Also find the secondary unbalanced force if the engine speed is 210 rpm.*

Solution

$$\omega = \frac{2\pi \times 210}{60} = 22 \text{ rad/s}$$

$n = 800/200 = 4$

Figure 14.26 represents the relative position of the cylinders and the cranks.

Taking 2 as the reference plane,

primary couples about the *RF*,

$m_1 r_1 l_1 = 200 \times 0.2 \times 0.4 = 16$

$m_2 r_2 l_2 = 0$

$m_3 r_3 l_3 = m_3 \times 0.2 \times (-0.6) = -0.12\, m_3$

$m_4 r_4 l_4 = 200 \times 0.2 \times (-1.1) = -44$

The couple polygon is drawn in Fig. 14.26.

$m_3 r_3 l_3$ of the crank 3 from the diagram = 53.7 at 135°

$\therefore\ m_3 r_3 l_3 = m_3 \times 0.12 = 53.7$ or $m_3 = 448$ kg

As its direction is to be negative, its direction is (135° + 180°) or 315°.

Primary force (*mr*) along each of outer cranks = 200 × 0.2 = 40

Primary force (*mr*) along crank 3 = 448 × 0.2 = 89.6

The force polygon is drawn in Fig. 14.26.

$m_2 r_2$ of crank 2 from the diagram = 87.6 at 161.4°

$\therefore\ m_2 r_2 = m_2 \times 0.2 = 87.6$ or $m_2 = 438$ kg

Its angular position is 161.4°.

Figure 14.26(b) represents the relative position of the cylinders and the cranks.

From secondary unbalanced force polygon,

$mr = 198$

Maximum unbalanced force

$$= 198 \times \frac{\omega^2}{n} = 198 \times \frac{22^2}{4} = 23\,958 \text{ N}$$

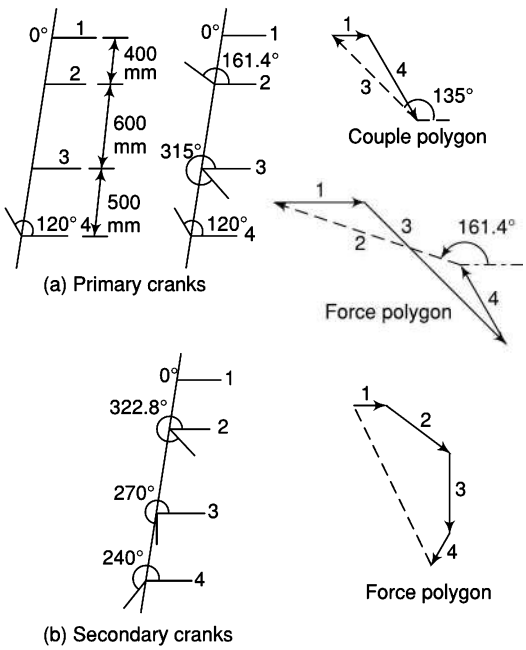

Fig. 14.26

Example 14.15 *The successive cranks of a five-cylinder in-line engine are at 144° apart. The spacing between cylinder centre lines is 400 mm. The lengths of the crank and the connecting rod are 100 mm and 450 mm respectively and the reciprocating mass for each cylinder is 20 kg. The engine speed is 630 rpm. Determine the maximum values of the primary and secondary forces and couples and the position of the central crank at which these occur.*

Solution

$$\omega = \frac{2\pi \times 630}{60} = 66 \text{ rad/s}$$

Figure 14.27(a) represents the relative position of the cylinders and the cranks.

Primary force (mr) along each crank $= 20 \times 0.1 = 2$

The primary force polygon is a closed polygon [Fig. 14.27(b)], therefore, no unbalanced primary force.

Primary couples about the mid-plane,

$m_1r_1l_1 = 2 \times 0.8 = 1.6$

$m_2r_2l_2 = 2 \times 0.4 = 0.8$

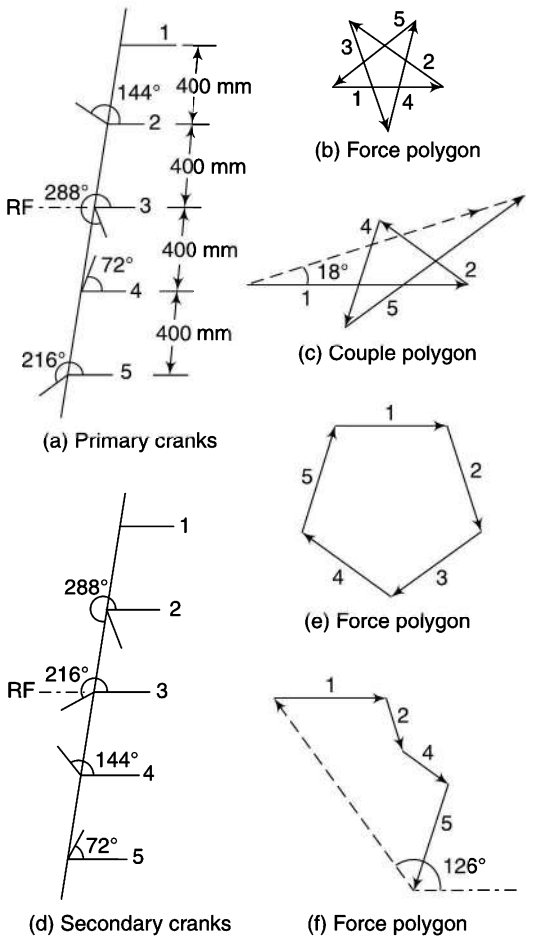

Fig. 14.27

$m_3r_3l_3 = 0$

$m_4r_4l_4 = -0.8$

$m_5r_5l_5 = -1.6$

The couple polygon is drawn in Fig. 14.27(c).

Unbalanced mrl on measurement = 2.1

The unbalanced primary couple $= 2.1 \times \omega^2$
$= 2.1 \times 66^2 = 9148$ N

The maximum value of the secondary couple will occur when it coincides with the line of stroke, i.e., when the crankshaft rotates through 18° and 198° clockwise. As initial position of mid-crank 3 is 288°, its positions for maximum primary couple will be (288° – 18°) and (288° – 198°) or 270° and 90°.

The positions of the cranks for secondary forces and couples will as shown in Fig. 14.27(d).

Secondary force (mr) along each crank

$= 20 \times 0.1 = 2$

The force polygon is a closed polygon [Fig. 14.27(e)], therefore, no unbalanced secondary force.

Secondary couples about the mid-plane, $m_1r_1l_1$, $m_2r_2l_2$ ... are the same as above for primary couples.

The couple polygon is shown in Fig. 14.27(f). It does not close.

Unbalanced mrl on measurement = 3.41

The unbalanced couple

$$= 3.41 \times \frac{\omega^2}{n} = 3.41 \times \frac{1}{450/100} \times 66^2$$

$= 3301$ N.m

The maximum value of the secondary couple will occur when it coincide with the line of stroke, i.e., when the crankshaft rotates through 126° and 306° clockwise. As initial position of mid-crank 3 is 216°, its positions for maximum secondary couple will be (216° – 126°), (216° – 306°) or 90° and –90° or 90° and 270°. However, since the secondary crank positions are taken at double the angles, the original crank will rotate through 45° and 135°. As the crank rotates through a full revolution, the maximum secondary couple will also occur at 225° and 315°.

Example 14.16 *Each crank and the connecting rod of a six-cylinder four stroke in-line engine are 60 mm and 240 mm respectively. The pitch distances between the cylinder centre lines are 80 mm, 80 mm, 100 mm, 80 mm and 80 mm respectively. The reciprocating mass of each cylinder is 1.4 kg. The engine speed is 1000 rpm. Determine the out-of-balance primary and secondary forces and couples on the engine if the firing order be 142635. Take a plane midway between the cylinders 3 and 4 as the reference plane.*

Solution Figure 14.28(a) represents the relative position of the cylinders and the cranks for the firing order 142635 for clockwise rotation of the crankshaft. As the engine is a four-stroke engine, firing takes place once in two revolutions of the crank and the angle between the cranks is 120°.

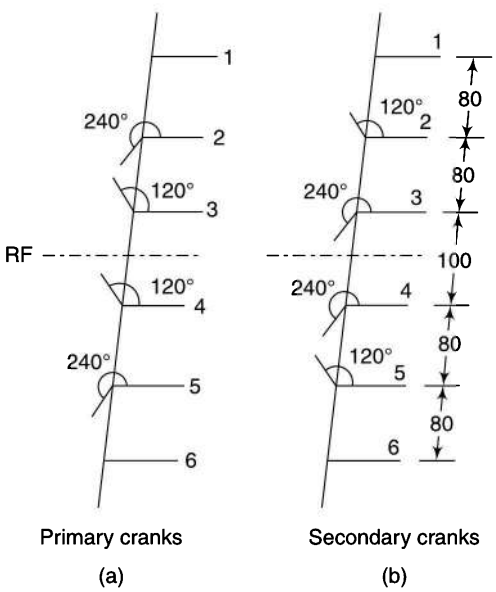

Fig. 14.28

Primary force (mr) along each crank = 1.4 × 60 = 84

The force polygon can exactly be drawn in the same manner as shown in Fig. 14.22(b). It is a closed polygon, therefore, no unbalanced primary force.

Primary couples about the mid-plane,

$$m_1r_1l_1 = 84 \times 210 = 17\,640$$

$$m_2r_2l_2 = 84 \times 130 = 10\,920$$

$$m_3r_3l_3 = 84 \times 50 = 4200$$

$$m_4r_4l_4 = -84 \times 50 = -4200$$

$$m_5r_5l_5 = -84 \times 130 = -10\,920$$

$$m_6r_6l_6 = -84 \times 210 = -17\,640$$

The couple polygon is again exactly similar to as shown in Fig. 14.22(b). It is a closed polygon, therefore, no unbalanced primary couple.

The secondary cranks position is shown in Fig. 14.28(b).

Secondary force (mr) along each crank = 1.4 × 60 = 84

The force polygon can exactly be drawn in the same manner as shown in Fig. 14.22(d). It is a closed polygon, therefore, no unbalanced secondary force.

Secondary couples about the mid-plane,

$m_1r_1l_1$, $m_2r_2l_2$ ..... are the same as above for primary couples.

The couple polygon is again exactly similar to as shown in Fig. 14.22(d). It is a closed polygon, therefore, no unbalanced secondary couple.

Example 14.17 *The stroke of each piston of a six-cylinder two-stroke in-line engine is 320 mm and the connecting rod is 800 mm long. The cylinder centre lines are spaced at 500 mm. The cranks are at 60° apart and the firing order is 145236. The reciprocating mass per cylinder is 100 kg and the rotating parts are 50 kg per crank. Determine the out-of-balance forces and couples about the mid plane if the engine rotates at 200 rpm.*

Solution Figure 14.29(a) represents the relative position of the cylinders and the cranks for the firing order 145236 for clockwise rotation of the crankshaft.

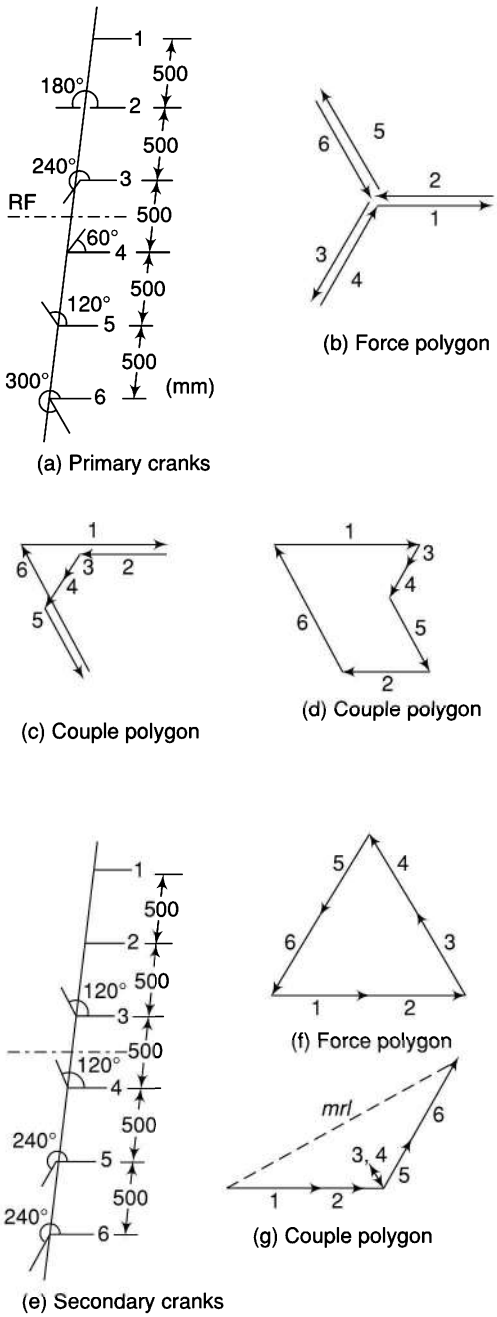

Fig. 14.29

Total mass at the crank pin = 100 + 50 = 150 kg

Primary force (mr) along each crank = 150 × 0.16 = 24

The force polygon [Fig. 14.29(b)] is a closed polygon, therefore, no unbalanced primary force.

Primary couples about the mid-plane,

$m_1r_1l_1 = 24 \times 1.25 = 30$

$m_2r_2l_2 = 24 \times 0.75 = 18$

$m_3r_3l_3 = 24 \times 0.25 = 6$

$m_4r_4l_4 = -6$

$m_5r_5l_5 = -18$

$m_6r_6l_6 = -30$

The couple polygon [Fig. 14.29(c)] is again a closed polygon, therefore, no unbalanced primary couple. As it is not necessary to add the vectors in order, the couple polygon can also be drawn as in Fig. 14.29(d).

The positions of the cranks for secondary forces and couples will as shown in Fig. 14.29(e). Secondary force (mr) along each crank = 100 × 0.16 = 16

(The rotating masses do not affect the secondary forces as they are only due to second harmonics of the piston acceleration.)

The force polygon is a closed polygon [Fig. 14.29(f)], therefore, no unbalanced secondary force.

Secondary couples about the mid-plane,

$m_1r_1l_1 = 16 \times 1.25 = 20$

$m_2r_2l_2 = 16 \times 0.75 = 12$

$m_3r_3l_3 = 16 \times 0.25 = 4$

$m_4r_4l_4 = -4$

$m_5r_5l_5 = -12$

$m_6r_6l_6 = -20$

The couple polygon is shown in Fig. 14.29(g). It does not close.

Unbalanced mrl on measurement = 55.43.

The unbalanced couple $= 55.43 \times \dfrac{\omega^2}{n}$

$$= 55.43 \times \frac{1}{5} \times \left(\frac{2\pi \times 200}{60}\right)^2 = 4863 \text{ N.m}$$

Example 14.18 *The cranks of a four-cylinder marine oil engine are arranged at angular intervals of 90°. The engine speed is 70 rpm and the reciprocating mass per cylinder is 800 kg. The inner cranks are 1 m apart and are symmetrically arranged between the outer cranks which are 2.6 m apart. Each crank is 400 mm long.*

Determine the firing order of the cylinders for the best balance of reciprocating masses and also the magnitude of the unbalanced primary couple for that arrangement.

Solution

$m = 800$ kg $\quad N = 70$ rpm

$r = 0.4$ m $\quad \omega = \dfrac{2\pi \times 70}{60} = 7.33$ rad/s

$mr\omega^2 = 800 \times 0.4 \times (7.33)^2 = 17\ 195$

There are four cranks. They can be used in six different arrangements as shown in Fig.14.30(a). It can be observed that in all the cases, primary forces are always balanced. Primary in each case will be as under:

Taking 1 as the reference plane,

$$C_{p1} = mr\omega^2\sqrt{(-l_3)^2 + (l_2 - l_4)^2}$$

$$= 17\ 195\sqrt{(-1.8)^2 + (0.8 - 2.6)^2}$$

$$= 43\ 761 \text{ N.m}$$

$C_{p6} = C_{p1} = 43\ 761$ N.m, only l_2 and l_4 are interchanged.

$$C_{p2} = mr\omega^2\sqrt{(-l_4)^2 + (l_2 - l_3)^2}$$

$$= 17\ 195\sqrt{(-2.6)^2 + (0.8 - 1.8)^2}$$

$$= 47\ 905 \text{ N.m}$$

$C_{p5} = C_{p2} = 47\ 905$ N.m, l_2 and l_3 are interchanged.

$$C_{p3} = mr\omega^3\sqrt{(-l_2)^2 + (l_4 - l_3)^2}$$

$$= 17\ 195\sqrt{(-0.8)^2 + (2.6 - 1.8)^2}$$

$$= 19\ 448 \text{ N.m}$$

$C_{p4} = C_{p3} = 19\ 448$ N.m, l_4 and l_3 are interchanged.

Thus the best arrangement is of 3rd and 4th. The firing orders are 1423 and 1324 respectively.

Unbalanced couple = <u>19448 N.m</u>

Graphical solution has also been shown in Fig. 14.30(b).

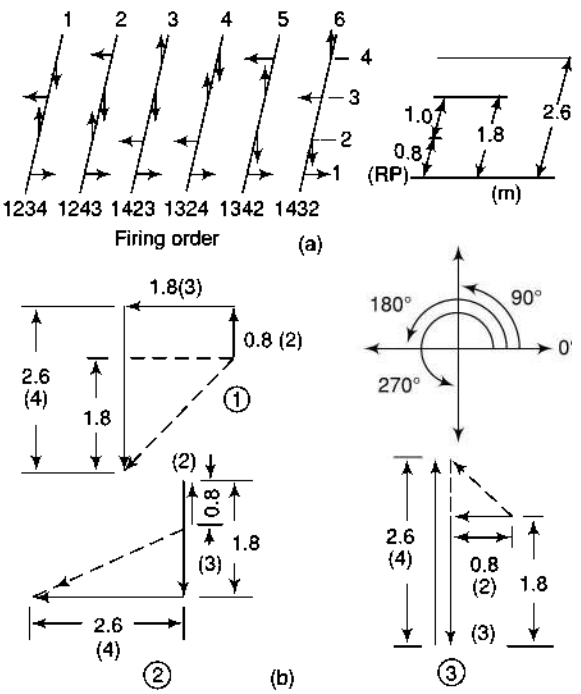

Fig. 14.30

Example 14.19 *The intermediate cranks of a four-cylinder symmetrical engine, which is in complete primary balance, are at 90° to each other and each has a reciprocating mass of 400 kg. The centre distance between intermediate cranks is 600 mm and between extreme cranks, it is 1800 mm. Lengths of the connecting rods and the cranks are 900 mm and 200 mm respectively. Calculate the masses fixed to the extreme cranks with their relative angular positions. Also, find the magnitude of the secondary forces and couples about the centre line of the system if the engine speed is 500 rpm.*

Solution Refer Fig.14.31.

$l = 0.9$ m $\quad m_2 = m_3 = 400$ kg

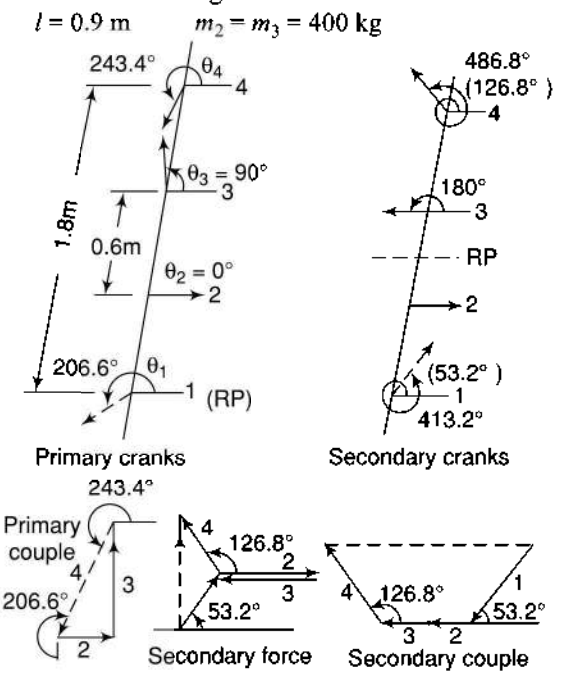

Fig. 14.31

$r = 0.2$ m $\qquad n = \dfrac{0.9}{0.2} = 4.5$

The engine is in complete primary balance. Taking 1 as the reference plane,

$m_2r_2l_2 = 400 \times 0.2 \times 0.6 = 48$

$m_3r_3l_3 = 400 \times 0.2 \times 1.2 = 96$

$m_4r_4l_4 = m_4 \times 0.2 \times 1.8 = 0.36\, m_4$

$$0.36m_4 = \sqrt{\begin{matrix}(48\cos 0° + 96\cos 90°)^2 \\ +(48\sin 0° + 96\sin 90°)^2\end{matrix}}$$

$$= \sqrt{(48)^2 + (96)^2}$$

$$= 107.33$$

$m_4 = \underline{298 \text{ kg}}$

$$\tan\theta_4 = \frac{-96}{-48} = 2; \theta_4 = \underline{243.4°}$$

By symmetry, $m_1 = \underline{298 \text{ kg}}$

$$\text{and } \tan\theta_1 = \frac{-48}{-96} = 0.5; \theta_1 = 206.6°$$

The position of the cranks for secondary forces and couples will be such that the angles are doubled (Fig.14.31).

$$\omega = \frac{2\pi \times 150}{60} = 15.7 \text{ rad/s}$$

Secondary force

$$= \frac{r\omega^2}{n}\left[\begin{matrix}\{298(\cos 53.2° + \cos 126.8°) + 400 \\ (\cos 0° + \cos 180°)\}^2 \\ +\{298(\sin 53.2° + \sin 126.8°) + 400 \\ (\sin 0° + \sin 180°)\}^2\end{matrix}\right]^{1/2}$$

$$= \frac{0.2 \times (15.7)^2}{4.5}(\sin 53.2° + \sin 126.8°) \times 298$$

$= \underline{5233.6 \text{ N}}$

Secondary couple about the centre line

$$= \frac{r\omega^2}{n}\left[\begin{matrix}\{298(-0.9\cos 53.2° + 0.9\cos 126.8°) \\ +400(-0.3\cos 0° + 0.3\cos 180°)^2\} \\ +\{298(-0.9\sin 53.2° + 0.9\sin 126.8°) \\ +400(-0.3\sin 0° + 0.3\sin 180°)\}^2\end{matrix}\right]^{1/2}$$

$$= \frac{0.2 \times (15.7)^2}{4.5}[298 \times (-0.9\cos 53.2° + 0.9\cos 126.8°) \times 400 \times (-0.6)]$$

$= \underline{6155 \text{ N.m}}$

14.11 BALANCING OF V-ENGINES

In V-engines, a common crank OA is operated by two connecting rods OB_1 and OB_2. Figure 14.32 shows a symmetrical two cylinder V-cylinder, the centre lines of which are inclined at an angle α to the x-axis.

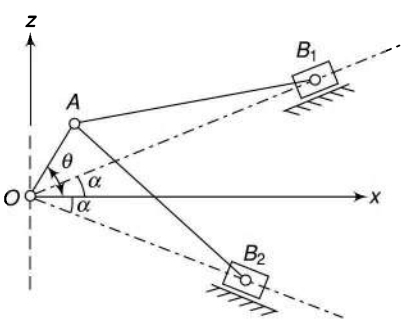

Fig. 14.32

Let θ be the angle moved by the crank from the x-axis.

Primary force

Primary force of 1 along line of stroke $OB_1 = mr\omega^2 \cos(\theta - \alpha)$

Primary force of 1 along x-axis $= mr\omega^2 \cos(\theta - \alpha)\cos\alpha$

Primary force of 2 along line of stroke $OB_2 = mr\omega^2 \cos(\theta + \alpha)$

Primary force of 2 along the x-axis $= mr\omega^2 \cos(\theta + \alpha)\cos\alpha$

Total primary force along x-axis

$= mr\omega^2 \cos\alpha[\cos(\theta - \alpha) + \cos(\theta + \alpha)]$

$= mr\omega^2 \cos\alpha\,[(\cos\theta\cos\alpha + \sin\theta\sin\alpha) + (\cos\theta\cos\alpha - \sin\theta\sin\alpha)]$

$= mr\omega^2 \cos\alpha\, 2\cos\theta\cos\alpha$

$= 2mr\omega^2 \cos^2\alpha\cos\theta \qquad (14.29)$

Similarly, total primary force along the z-axis

$mr\omega^2\,[\cos(\theta - \alpha)\sin\alpha - \cos(\theta + \alpha)\sin\alpha]$

$$= mr\omega^2 \sin\alpha[(\cos\theta\cos\alpha + \sin\theta\sin\alpha) - (\cos\theta\cos\alpha - \sin\theta\sin\alpha)]$$

$$= mr\omega^2 \sin\alpha\, 2\sin\theta\sin\alpha$$

$$= 2mr\omega^2 \sin^2\alpha\sin\theta \tag{14.30}$$

Resultant primary force

$$= \sqrt{(2mr\omega^2\cos^2\alpha\cos\theta)^2 + (2mr\omega^2\sin^2\alpha\sin\theta)^2}$$

$$= 2mr\omega^2\sqrt{(\cos^2\alpha\cos\theta)^2 + (\sin^2\alpha\sin\theta)^2} \tag{14.31}$$

It will be at an angle β with the x-axis, given by

$$\tan\beta = \frac{\sin^2\alpha\sin\theta}{\cos^2\alpha\cos\theta} \tag{14.32}$$

If $2\alpha = 90°$, resultant force

$$= 2mr\omega^2\sqrt{(\cos^2 45°\cos\theta)^2 + (\sin^2 45°\sin\theta)^2}$$

$$= mr\omega^2 \tag{14.33}$$

$$\tan\beta = \frac{\sin^2 45°\sin\theta}{\cos^2 45°\cos\theta} = \tan\theta \tag{14.34}$$

i.e., $\beta = \theta$ or it acts along the crank and, therefore, can be completely balanced by a mass at a suitable radius diametrically opposite to the crank such that $m_r r_r = mr$.

For a given value of α, the resultant primary force is maximum when

$$(\cos^2\alpha\cos\theta)^2 + (\sin^2\alpha\sin\theta)^2 \text{ is maximum}$$

or $$(\cos^4\alpha\cos^2\theta + \sin^4\alpha\sin^2\theta) \text{ is maximum}$$

or $$\frac{d}{d\theta}(\cos^4\alpha\cos^2\theta + \sin^4\alpha\sin^2\theta) = 0$$

or $$-\cos^4\alpha.2\cos\theta\sin\theta + \sin^4\alpha.2\sin\theta\cos\theta = 0$$

or $$-\cos^4\alpha.\sin 2\theta + \sin^4\alpha.\sin 2\theta = 0$$

or $$\sin 2\theta(\sin^4\alpha - \cos^4\alpha) = 0 \tag{14.35}$$

As α is not zero, therefore, for a given value of α, the resultant primary force is maximum when θ is zero degree.

Secondary force

Secondary force of 1 along $OB_1 = \dfrac{mr\omega^2}{n}\cos 2(\theta - \alpha)$

Secondary force of 1 along x-axis $= \dfrac{mr\omega^2}{n}\cos 2(\theta - \alpha)\cos\alpha$

Secondary force of 2 along $OB_2 = \dfrac{mr\omega^2}{n}\cos 2(\theta + \alpha)$

Secondary force of 2 along x-axis $= \dfrac{mr\omega^2}{n}\cos 2(\theta + \alpha)\cos\alpha$

Total secondary force along x-axis

$$= \frac{mr\omega^2}{n}\cos\alpha[\cos 2(\theta-\alpha)+\cos 2(\theta+\alpha)]$$

$$= \frac{mr\omega^2}{n}\cos\alpha[(\cos 2\theta\cos 2\alpha+\sin 2\theta\sin 2\alpha)+(\cos 2\theta\cos 2\alpha-\sin 2\theta\sin 2\alpha)]$$

$$= \frac{2mr\omega^2}{n}\cos\alpha\cos 2\theta\cos 2\alpha \tag{14.36}$$

Similarly, secondary force along z-axis $= \dfrac{2mr\omega^2}{n}\sin\alpha\sin 2\theta\sin 2\alpha$ (14.37)

Resultant secondary force

$$= \frac{2mr\omega^2}{n}\sqrt{(\cos\alpha\cos 2\theta\cos 2\alpha)^2+(\sin\alpha\sin 2\theta\sin 2\alpha)^2} \tag{14.38}$$

$$\tan\beta' = \frac{\sin\alpha\sin 2\theta\sin 2\alpha}{\cos\alpha\cos 2\theta\cos 2\alpha} \tag{14.39}$$

If $2\alpha = 90°$ or $\alpha = 45°$,

$$\text{Secondary force} = \frac{2mr\omega^2}{n}\sqrt{\left(\frac{\sin 2\theta}{\sqrt{2}}\right)^2}$$

$$= \sqrt{2}\,\frac{mr\omega^2}{n}\sin 2\theta \tag{14.40}$$

$$\tan\beta' = \infty,\ \beta' = 90° \tag{14.41}$$

This means that the force acts along z-axis and is a harmonic force and special methods are needed to balance it.

Example 14.20 *The cylinder axes of a V-engine are at right angles to each other. The weight of each piston is 2 kg and of each connecting rod is 2.8 kg. The weight of the rotating parts like crank webs and the crank pin is 1.8 kg. The connecting rod is 400 mm long and its centre of mass is 100 mm from the crank-pin centre. The stroke of the piston is 160 mm. Show that the engine can be balanced for the revolving and the primary force by a revolving countermass. Also, find the magnitude and the position if its centre of mass from the crankshaft centre is 100 mm.*

What is the value of the resultant secondary force if the speed is 840 rpm?

Solution

$$\omega = \frac{2\pi N}{60} = \frac{2\pi\times 840}{60} = 88 \text{ rad/s}$$

$$n = \frac{400}{80} = 5$$

Total mass of rotating parts at the crank pin

$$= 1.8 + \frac{2.8\times(400-100)}{400}\times 2$$

$= 6$ kg

Unbalanced force due to revolving mass along the crank $= 6\,r\omega^2$

Total mass of reciprocating parts/cylinder

$$= 2 + \frac{2.8\times 100}{400}$$

$= 2.7$ kg

As the angle between the cranks is 90°, i.e., $2\alpha = 90°$,

$\therefore$ The resultant primary force $= mr\omega^2 = 2.7\,r\omega^2$ (Eq. 14.33)

It acts along the crank. (Eq. 14.34)

Total unbalanced force along the crank

$= (6 + 2.7)\,r\omega^2 = 8.7\,r\omega^2$

It can easily be balanced by a revolving mass in a direction opposite to that of crank.

Countermass m_r at a radial distance of 100 mm,

$m_r \times 100 \times \omega^2 = 8.7 \times (160/2)\omega^2$

$m_r = 6.96$ kg

The rotating masses do not affect the secondary forces as they are only due to second harmonics of the piston acceleration.

Secondary force $= \sqrt{2}\,\dfrac{mr\omega^2}{n}\sin 2\theta$ (Eq. 14.40)

$= \sqrt{2} \times \dfrac{2.7 \times 0.08 \times 88^2}{5}\sin 2$

$= 473.1 \sin 2\theta$

Maximum value at $\theta = 45^\circ = 473.1$ N

Example 14.21 *The cylinders of a twin V-engine are set at 60° angle with both pistons connected to a single crank through their respective connecting rods. Each connecting rod is 600 mm long and the crank radius is 120 mm. The total rotating mass is equivalent to 2 kg at the crank radius and the reciprocating mass is 1.2 kg per piston. A balance mass is also fitted opposite to the crank equivalent to 2.2 kg at a radius of 150 mm. Determine the maximum and minimum values of the primary and secondary forces due to inertia of the reciprocating and the rotating masses if the engine speed is 800 rpm.*

Solution Refer Fig. 14.33.

$m = 1.2$ kg	$M = 2$ kg
$l = 600$ mm	$r = 120$ mm
$m' = 2.2$ kg	$r' = 150$ mm
$N = 800$ rpm	

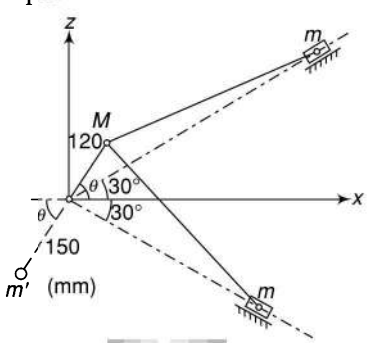

Fig. 14.33

$$\omega = \frac{2\pi N}{60} = \frac{2\pi \times 1050}{60} = 110 \text{ rad/s}$$

$$n = \frac{400}{80} = 5$$

Primary force

Total primary force along x-axis

$= 2mr\omega^2 \cos^2\alpha \cos\theta$ (Eq. 14.29)

Centrifugal force due to rotating mass along x-axis $= Mr\omega^2 \cos\theta$

Centrifugal force due to balancing mass along x-axis $= -m'\,r\omega^2 \cos\theta$

Total unbalanced force along x-axis

$= 2mr\omega^2 \cos^2\alpha \cos\theta + Mr\omega^2 \cos\theta - m'r'\omega^2 \cos\theta$

$= \omega^2 \cos\theta\,(2mr\cos^2\alpha + Mr - m'r')$

$= 110^2 \times \cos\theta\,(2 \times 1.2 \times 0.12 \cos^2 30^\circ + 2 \times 0.12 - 2.2 \times 0.15)$

$= 110^2 \times \cos\theta\,(0.216 + 0.24 - 0.33)$

$= 1524.6 \cos\theta$ N

Total primary force along z-axis

$= 2mr\omega^2 \sin^2\alpha \sin\theta$ (Eq. 14.30)

Centrifugal force due to rotating mass along z-axis $= Mr\omega^2 \sin\theta$

Centrifugal force due to balancing mass along z-axis $= -\,m'r\omega^2 \sin\theta$

Total unbalanced force along z-axis

$= 2mr\omega^2 \sin^2\alpha \sin\theta + Mr\omega^2 \sin\theta - m'r'\omega^2 \sin\theta$

$= \omega^2 \sin\theta\,(2mr\sin^2\alpha + Mr - m'r')$

$= 110^2 \times \sin\theta\,(2 \times 1.2 \times 0.12 \sin^2 30^\circ + 2 \times 0.12 - 2.2 \times 0.15)$

$= 110^2 \times \sin\theta\,(0.072 + 0.24 - 0.33)$

$= -217.8 \sin\theta$ N

Resultant primary force

$$= \sqrt{1524^2 \cos^2\theta + (-217.8)^2 \sin^2\theta}$$

$$= \sqrt{2\ 322\ 576 \cos^2\theta + 47\ 437 \sin^2\theta}$$

$$= \sqrt{2\ 275\ 139 \cos^2\theta + 47\ 437 \cos^2\theta + 47\ 437 \sin^2\theta}$$

$$= \sqrt{2\ 275\ 139 \cos^2\theta + 47\ 437}$$

This is maximum when θ is 0° and minimum when $\theta = 90^\circ$.

Maximum primary force

$$= \sqrt{2\ 275\ 139 + 47\ 437} = 1524 \text{ N}$$

Minimum primary force

$= \sqrt{47\ 437} = 217.8$ N

Secondary force

The rotating masses do not affect the secondary forces as they are only due to second harmonics of the piston acceleration.

Resultant secondary force

$$= \frac{2mr\omega^2}{n}\sqrt{\begin{matrix}(\cos\alpha\cos 2\theta\cos 2\alpha)^2 \\ +(\sin\alpha\sin 2\theta\sin 2\alpha)^2\end{matrix}} \qquad \text{(Eq. 14.38)}$$

$$= \frac{2\times 1.2\times 0.12\times 110^2}{5}\sqrt{\begin{matrix}(\cos 30^\circ\cos 2\theta\cos 60^\circ)^2 \\ +(\sin 30^\circ\sin 2\theta\sin 60^\circ)^2\end{matrix}}$$

$$= 696.96\sqrt{(0.433\cos 2\theta)^2 + (0.433\sin 2\theta)^2}$$

This is maximum when θ is 0° and minimum when $\theta = 90°$

Maximum primary force

$= 696.96 \times 0.433 = 301.8$ N

Minimum primary force

$= 696.96 \times 0.433 = 301.8$ N

Thus, the secondary force has the same value for maximum and minimum.

14.12 BALANCING OF W, V-8 AND V-12 ENGINES

In W-engines, a common crank *OA* is operated by three connecting rods as shown in Fig. 14.34.

Primary force

Primary force of 1 along *x*-axis= $mr\omega^2 \cos(\theta - \alpha)\cos\alpha$

Primary force of 2 along *x*-axis = $mr\omega^2 \cos(\theta + \alpha)\cos\alpha$

Primary force of 3 along *x*-axis = $mr\omega^2 \cos\theta\cos\alpha$

$= mr\omega^2 \cos\theta$ (as $\alpha = 0°$)

Total primary force along *x*-axis

$= mr\omega^2 \cos\alpha[\cos(\theta - \alpha) + \cos(\theta + \alpha)] + mr\omega^2 \cos\theta$

$= 2\, mr\omega^2 \cos^2\alpha\cos\theta\cos\alpha + mr\omega^2 \cos\theta$

$= mr\omega^2 \cos\theta\,(2\cos^2\alpha + 1)$

Total primary force along *z*-axis will be same as in the V-twin engine because

Primary force of 3 along *z*-axis = $mr\omega^2 \cos\theta\sin\alpha$

$= 0$

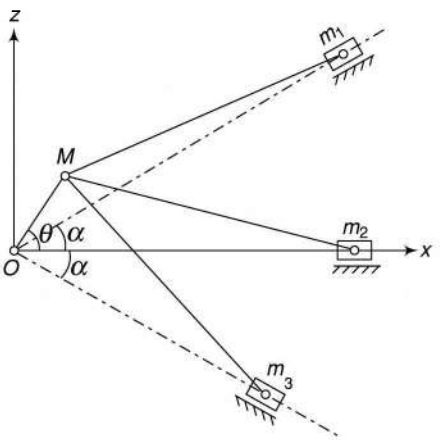

Fig. 14.34

Resultant primary force

$$= \sqrt{[mr\omega^2\cos\theta\,(2\cos^2\alpha + 1)^2] + (2mr\omega^2\sin^2\alpha\sin\theta)^2}$$

$$= mr\omega^2\sqrt{[\cos\theta\,(2\cos^2\alpha + 1)^2] + (2\sin^2\alpha\sin\theta)^2}$$

It will be at an angle β with the *x*-axis, given by

$$\tan\beta = \frac{2\sin^2\alpha\sin\theta}{\cos\theta(2\cos^2\alpha + 1)}$$

If $\alpha = 60°$, resultant force

$$= mr\omega^2\sqrt{[\cos\theta\,(2\cos^2 60° + 1)^2] + (2\sin^2 60°\sin\theta)^2}$$

$$= \frac{3}{2}mr\omega^2$$

$$\tan\beta = \frac{2\sin^2\alpha\sin\theta}{\cos\theta(2\cos^2\alpha + 1)}$$

$$= \frac{2\sin^2 60^\circ \alpha \sin\theta}{\cos\theta(2\cos^2 60^\circ + 1)}$$

$$= \tan\theta$$

i.e., $\beta = \theta$ or it acts along the crank and, therefore, can be completely balanced by a mass at a suitable radius diametrically opposite to the crank such that $m_r r_r = mr$.

Secondary force

Total secondary force along x-axis

$$= \frac{mr\omega^2}{n}\cos\alpha[\cos 2(\theta - \alpha) + \cos 2(\theta + \alpha)] + \frac{mr\omega^2}{n}\cos 2\theta$$

$$= \cos 2\theta\left(\frac{2mr\omega^2}{n}\cos\alpha\cos 2\alpha + 1\right)$$

Total primary force along z-axis will be same as in the V-twin engine.

Resultant secondary force

$$= \frac{mr\omega^2}{n}\sqrt{[\cos 2\theta\,(2\cos\alpha\cos 2\alpha + 1)]^2 + (2\sin\alpha\sin 2\theta\sin 2\alpha)^2}$$

$$\tan\beta' = \frac{2\sin\alpha\sin 2\theta\sin 2\alpha}{\cos 2\theta\,(2\cos\alpha\cos 2\alpha + 1)}$$

If $\alpha = 60°$,

secondary force along x-axis $= \dfrac{mr\omega^2}{2n}\cos 2\theta$

secondary force along z-axis $= \dfrac{3mr\omega^2}{2n}\sin 2\theta$

It is not possible to balance these forces simultaneously.

V-8 Engine

A V-8 engine consists of two banks of four cylinders each. The two banks are inclined to each other in the shape of a V. The analysis of such an engine will depend upon the arrangement of cylinders in each bank.

Let the cranks of four cylinders on one bank be arranged as shown in Fig. 14.19. In this case there is only a secondary unbalance force equal to $= \dfrac{4mr\omega^2}{n}$

If the angle between the two banks is 90°,

secondary force $= \sqrt{2}\,\dfrac{4mr\omega^2}{n}\sin 2\theta$ along z-axis (Eqs 14.40 and 14.41)

V-12 Engine

A V-12 engine consists of two banks of six cylinders each. The two banks are inclined to each other in the shape of V and the analysis depends upon the arrangement of cylinders in each bank.

Let the cranks of six cylinders on one bank are arranged as shown in Fig. 14.22. In this case there is no unbalanced force or couple and thus the engine is completely balanced.

Arrangement of cranks of a V-12 engine

14.13 BALANCING OF RADIAL ENGINES

A radial engine is a multicylinder engine in which all the connecting rods are connected to a common crank. The analysis of forces in such type of engines is much simplified by using the method of *direct and reverse cranks*. As all the forces are in the same plane, no unbalance couples exist.

In a reciprocating engine [Fig. 14.35(a)],

Primary force = $mr\omega^2 \cos\theta$ (along line of stroke)

In the method of direct and reverse cranks, a force identical to this force is generated by two masses in the following way:

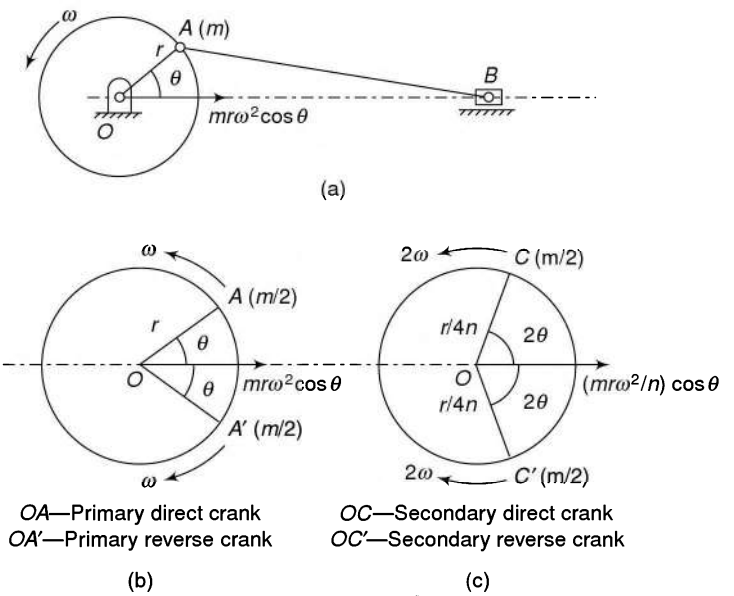

Fig. 14.35

- A mass $m/2$, placed at the crank pin A and rotating at an angular velocity ω in the given direction [Fig. 14.35(b)].
- A mass $m/2$, placed at the crank pin of an imaginary crank OA' at the same angular position as the real crank but in the opposite direction of the line of stroke. This imaginary crank is assumed to rotate at the same angular velocity ω in the opposite direction to that of the real crank. Thus, while rotating; the two masses coincide only on the cylinder centre line. Now, the components of centrifugal force due to rotating masses along line of stroke are

  Due to mass at $A = \frac{m}{2} r\omega^2 \cos\theta$

  Due to mass at $A' = \frac{m}{2} r\omega^2 \cos\theta$

Thus, total force along line of stroke = $mr\omega^2 \cos\theta$ which is equal to the primary force. At any instant, the components of the centrifugal forces of these two masses normal to the line of stroke will be equal and opposite.

The crank rotating in the direction of engine rotation is known as the *direct crank* and the imaginary crank rotating in the opposite direction is known as the *reverse crank.*

Now,

$$\text{Secondary accelerating force} = mr\omega^2 \frac{\cos 2\theta}{n}$$

$$= mr(2\omega)^2 \frac{\cos 2\theta}{4n}$$

$$= m\frac{r}{4n}(2\omega)^2 \cos 2\theta \qquad \text{(along line of stroke)}$$

This force can also be generated by two masses in a similar way as follows:

- A mass $m/2$, placed at the end of direct secondary crank of length $r/(4n)$ at angle 2θ and rotating at an angular velocity 2ω in the given direction [Fig. 14.35(c)].
- A mass $m/2$, placed at the end of reverse secondary crank of length $r/(4n)$ at angle -2θ rotating at an angular velocity 2ω in the opposite direction. Now, the components of centrifugal force due to rotating masses along line of stroke are

  Due to mass at $C = \frac{m}{2}\frac{r}{4n}(2\omega)^2 \cos 2\theta = \frac{mr\omega^2}{2n}\cos 2\theta$

  Due to mass at $C' = \frac{m}{2}\frac{r}{4n}(2\omega)^2 \cos 2\theta = \frac{mr\omega^2}{2n}\cos 2\theta$

  Thus total force along line of stroke $= 2 \times \frac{m}{2}\frac{r}{4n}(2\omega)^2 \cos 2\theta = \frac{mr\omega^2}{n}\cos 2\theta$

  which is equal to the secondary force.

  This method can also be used to find the forces in V-engines.

Example 14.22 *The axes of a three-cylinder air compressor are at 120° to one another and their connecting rods are coupled to a single crank. The length of each connecting rod is 240 mm and the stroke is 160 mm. The reciprocating parts have a mass of 2.4 kg per cylinder. Determine the primary and secondary forces if the engine runs at 2000 rpm.*

Solution

$r = 0.160/2 = 0.08$ m $\qquad l = 0.24$ m

$N = 2000$ rpm $\qquad m = 2.4$ kg

$n = l/r = 0.24/0.08 = 3$

The position of three cylinders is shown in Fig. 14.36.

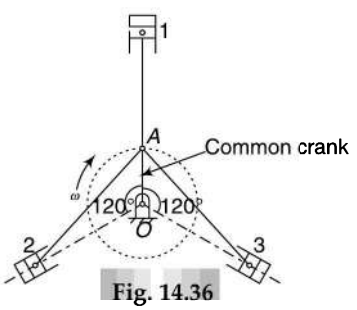

Fig. 14.36

Primary cranks

The primary direct and reverse crank positions are shown in Fig. 14.37 (a) and (b) respectively.

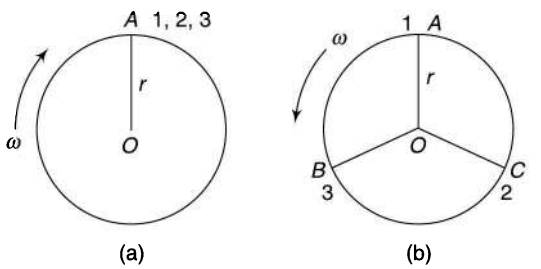

Fig. 14.37

For cylinder 1 From the line of stroke as $\theta = 0°$, the direct and the reverse cranks coincide with the common crank, i.e., along OA.

For cylinder 2 From the line of stroke as $\theta = 120°$, the direct crank is 120° clockwise (along OA) and the reverse crank 120° counter-clockwise (along OC).

For cylinder 3 From the line of stroke as $\theta = 240°$, the direct crank is 240° clockwise (along OA) and the reverse crank 240° counter-clockwise (along OB).

In positions of the direct and reverse cranks are shown in Table 14.1.

Table 14.1

Cylinder	*Crank angle (counter-clockwise)*	*Angle of rotation of the crank*	*Position of direct crank on clockwise rotation*	*Position of reverse crank on counter-clockwise rotation*
1	0°	0°	*OA*	*OA*
2	120°	120°	*OA*	*OC*
3	240°	240°	*OA*	*OB*

Figure 14.37 (b) indicates that the primary reverse cranks form a balanced system and therefore, unbalanced primary force is due to direct cranks only and is given by

Maximum primary force = $3\,\frac{m}{2}\,r\omega^2$

$$= 3 \times \frac{2.4}{2} \times 0.08 \times \left(\frac{2\pi \times 2000}{60}\right)^2$$

$= 3 \times 1.2 \times 0.08 \times 43\,865$

= 12 633 N or <u>12.633 kN</u>

Secondary Cranks

The secondary direct and reverse crank positions are shown in Fig. 14.38(a) and (b) respectively. Refer Table 14.2.

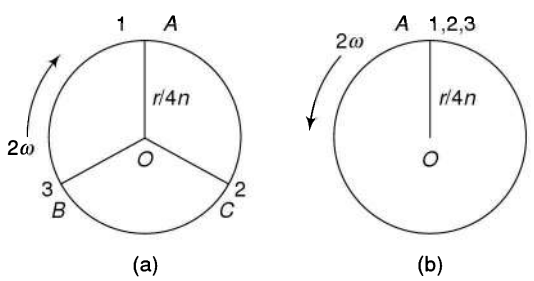

Fig. 14.38

Figure 14.38(a) indicates that the primary direct cranks form a balanced system and therefore, unbalanced secondary force is due to reverse only cranks and is given by

Maximum secondary force

$$= 3\frac{mr\omega^2}{2n} = 3 \times \frac{2.4 \times 0.08}{2 \times 3} \times \left(\frac{2\pi \times 2000}{60}\right)^2$$

$= 3 \times 0.032 \times 43\,865$

= 4211 N or <u>4.211 kN</u>

Example 14.23 *The length of each connecting rod of a 60° V-engine is 220 mm and the stroke is 100 mm. The mass of the reciprocating parts is 1.2 kg per cylinder and the crank speed is 2400 rpm. Find the values of the primary and the secondary forces.*

Solution

$r = 0.1/2 = 0.05$ m $\qquad l = 0.22$ m

$N = 2400$ rpm $\qquad m = 1.2$ kg

$n = l/r = 0.22/0.05 = 4.4$

The position of the two cylinders is shown in Fig. 14.39.

Table 14.2

Cylinder	*Crank angle (counter-clockwise)*	*Angle of rotation of the crank*	*Position of direct crank on clockwise rotation*	*Position of reverse crank on counter-clockwise rotation*
1	0°	0°	*OA*	*OA*
2	120°	240°	*OC*	*OA*
3	240°	480° or 120°	*OB*	*OA*

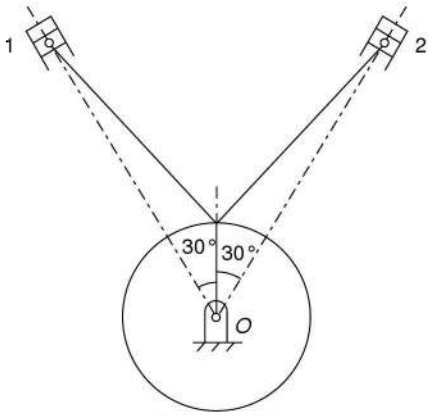

Fig. 14.39

Primary Cranks

The primary direct and reverse crank positions are shown in Fig. 14.40 (a) and (b) respectively. Refer Table 14.3.

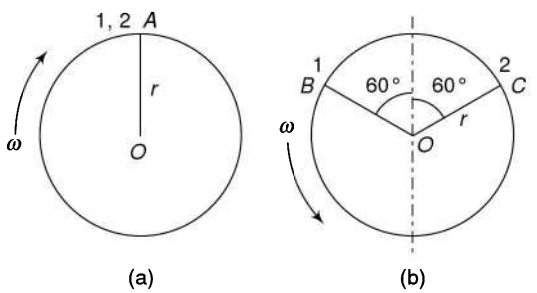

Fig. 14.40

Primary force due to direct cranks = $2\,\frac{m}{2}\,r\omega^2$

$$= 2\,\frac{1.2}{2} \times 0.05 \times \left(\frac{2\pi \times 2400}{60}\right)^2$$

$= 3 \times 0.6 \times 0.05 \times 63\,165$

$= 3790$ N

Primary force due to reverse cranks = $2\,\frac{m}{2}\,r\omega^2 \cos 60^\circ = 3790 \times 0.5 = 1895$ N

Total primary force = 3790 + 1895 = 5685 N

Secondary Cranks

The secondary direct and reverse crank positions are shown in Fig. 14.41(a) and (b) respectively. Refer Table 14.4.

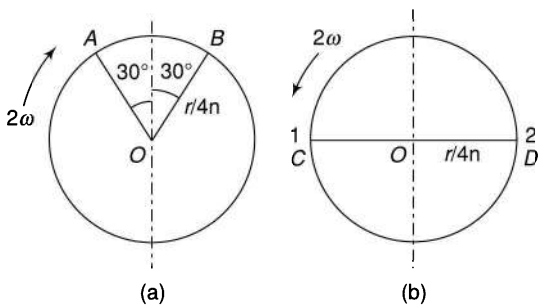

Fig. 14.41

Figure 14.41(b) indicates that the secondary reverse cranks form a balanced system and therefore, unbalanced secondary force is due to direct cranks only and is given by

Thus unbalanced secondary force

$$= 2\,\frac{mr\omega^2}{2n}\cos 30^\circ = 2\,\frac{mr\omega^2}{2}\,\frac{\cos 30^\circ}{n}$$

$$= 3790 \times \frac{\cos 30^\circ}{4.4}$$

$= 746$ N

Table 14.3

Cylinder	*Crank angle (counter-clockwise)*	*Angle of rotation of the crank*	*Position of direct crank on clockwise rotation*	*Position of reverse crank on counter-clockwise rotation*
1	30°	30°	*OA*	*OB*
2	330°	330°	*OA*	*OC*

Table 14.4

Cylinder	*Crank angle (counter-clockwise)*	*Angle of rotation of the crank*	*Position of direct crank on clockwise rotation*	*Position of reverse crank on counter-clockwise rotation*
1	30°	60°	*OB*	*OC*
2	330°	660° or 300°	*OA*	*OD*

Example 14.24 *A radial aero-engine has seven cylinders equally spaced with all the connecting rods coupled to a common crank. The crank and each of the connecting rods are 200 mm and 800 mm respectively. The reciprocating mass per cylinder is 3 kg. Determine the magnitude and the angular position of the balance masses required at the crank radius for complete primary and secondary balancing of the engine.*

Solution The position of the seven cylinders is shown in Fig. 14.42.

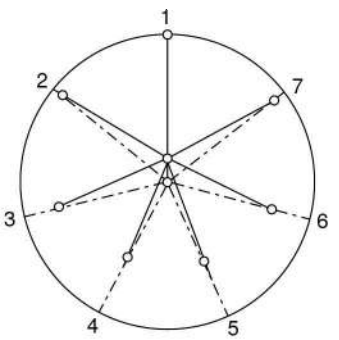

Fig. 14.42

Primary Cranks

The primary direct and reverse crank positions are shown in Fig. 14.43(a) and (b) respectively. Refer Table 14.5.

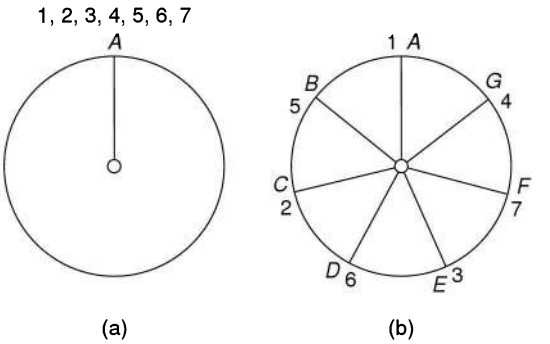

Fig. 14.43

Let $360°/7 = X$

This shows that there is primary unbalance due to direct cranks.

Secondary Cranks

The secondary direct and reverse crank positions are shown in Fig. 14.44 (a) and (b) respectively. Refer Table 14.6.

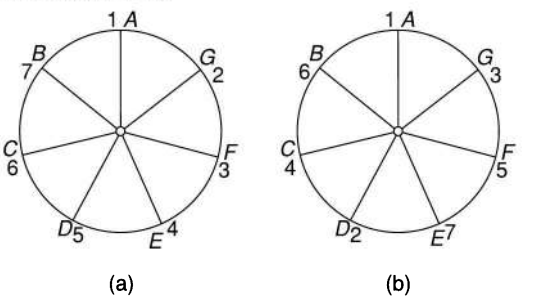

Fig. 14.44

Table 14.5

Cylinder	*Crank angle (counter-clockwise) deg.*	*Angle of rotation of the crank, deg.*	*Position of direct crank on clockwise rotation*	*Position of reverse crank on counter-clockwise rotation*
1	0	0	*OA*	*OA*
2	*X*	*X*	*OA*	*OC*
3	2*X*	2*X*	*OA*	*OE*
4	3*X*	3*X*	*OA*	*OG*
5	4*X*	4*X*	*OA*	*OB*
6	5*X*	5*X*	*OA*	*OD*
7	6*X*	6*X*	*OA*	*OF*

Table 14.6

Cylinder	Crank angle (counter-clockwise)	Angle of rotation of the crank	Position of direct crank on clockwise rotation	Position of reverse crank on counter-clockwise rotation
1	0	0	*OA*	*OA*
2	*X*	2*X*	*OG*	*OD*
3	2*X*	4*X*	*OF*	*OG*
4	3*X*	6*X*	*OE*	*OC*
5	4*X*	8*X* or *X*	*OD*	*OF*
6	5*X*	10*X* or 3*X*	*OC*	*OB*
7	6*X*	12*X* or 5*X*	*OB*	*OE*

There is no unbalance due to secondary direct or inverse cranks.

The unbalanced primary force along the crank can be balanced by a countermass at the crank radius opposite to the crank at 180°.

$$m_c r\omega^2 = \frac{1}{2} \times 7mr\omega^2$$

$$m_c = 3.5\ m = 3.5 \times 3 = \underline{10.5\ \text{kg}}$$

14.14 BALANCING MACHINES

Though care is taken in the design of rotating parts of a machine to eliminate any out-of-balance force or couple, still some residual unbalance will always be left in the finished part. This may happen due to slight variation in the density of the material or inaccuracies in the casting or machining. Since the centrifugal force and couple vary as the square of the speed, even the small errors may lead to serious troubles at high speeds of rotation. Thus, effort is made to measure these out-of balance forces and couples so that suitable corrections can be made to the part to reduce the final errors. The machines used may be to measure the static unbalance or dynamic unbalance or both.

A *balancing machine* is able to indicate whether a part is in balance or not and if it is not, then it measures the unbalance by indicating its magnitude and location.

1. Static Balancing Machines

Static balancing machines are helpful for parts of small axial dimensions such as fans, gears and impellers, etc., in which the mass lies practically in a single plane.

(i) Figure 14.45 shows a simple kind of static balancing machine. The machine is of the form of a weighing machine. One arm of the machine has a mandrel to support the part to be balanced and the other arm supports a suspended deadweight to make the beam approximately horizontal. The mandrel is then rotated slowly either by hand or by a motor. As the mandrel is rotated, the beam will oscillate depending upon the unbalance of the part. If the unbalance is represented by a mass *m* at radius *r*, the apparent weight is greatest when *m* is at the position

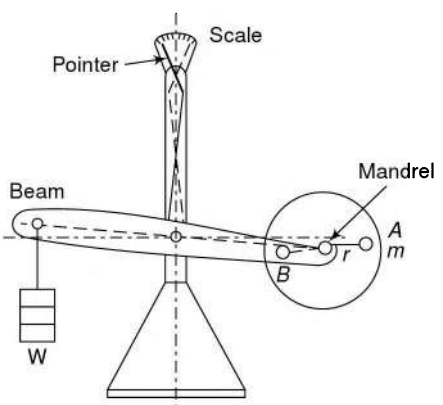

Fig. 14.45

A and least when it is at *B* as the lengths of the arms in the two cases will be maximum and minimum. A calibrated scale along with the pointer can also be used to measure the amount of unbalance. Obviously, the pointer remains stationary in case the body is statically balanced.

(ii) A more sensitive machine than the previous one is shown in Fig. 14.46. It consists of a cradle supported on two pivots *P-P* parallel to the axis of rotation of the part and held in position by two springs *S-S*. The part to be tested is mounted on the cradle and is flexibly coupled to an electric motor. The motor is started and the speed of rotation is adjusted so that it coincides with the natural frequency of the system. Thus, the condition of resonance is obtained under which even a small amount of unbalance generates large amplitude of the cradle.

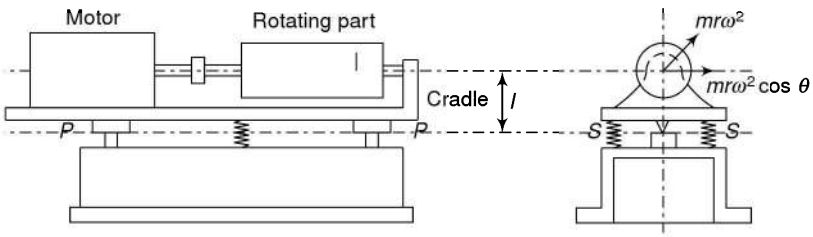

Fig. 14.46

The moment due to unbalance = $(mr\,\omega^2.\cos\theta).l$ where ω is the angular velocity of rotation. Its maximum value is $mr\,\omega^2.l$. If the part is in static balance but dynamic unbalance, no oscillation of the cradle will be there as the pivots are parallel to the axis of rotation.

2. Dynamic Balancing Machines

For dynamic balancing of a rotor, two balancing or countermasses are required to be used in any two convenient planes. This implies that the complete unbalance of any rotor system can be represented by two unbalances in those two planes. Balancing is achieved by addition or removal of masses in these two planes, whichever is convenient. The following is a common type of dynamic balancing machine.

Pivoted-cradle Balancing Machine In this type of machine, the rotor to be balanced is mounted on half-bearings in a rigid carriage and is rotated by a drive motor through a universal joint (Fig.14.47). Two balancing planes *A* and *B* are chosen on the rotor. The cradle is provided with pivots on left and right sides of the rotor which are purposely adjusted to coincide with the two correction planes. Also the pivots can be put in the locked or unlocked position. Thus, if the left pivot is released, the cradle and the specimen are free to oscillate about the locked (right) pivot. At each end of the cradle, adjustable springs and dashpots are provided to have a single degree of freedom system. Usually, their natural frequency is tuned to the motor speed.

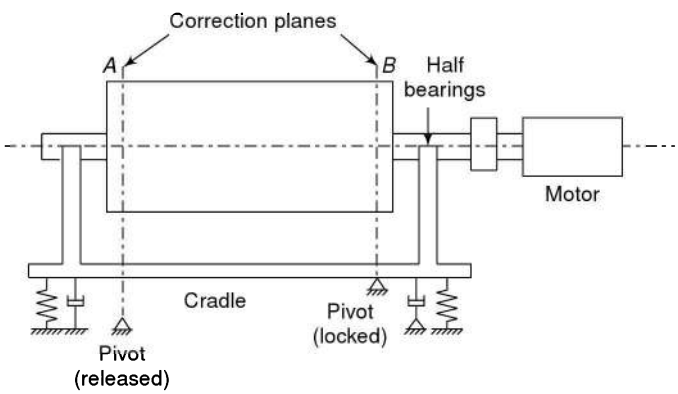

Fig. 14.47

The following procedure is adopted for testing:

1. First, either of the two pivots say left is locked so that the readings of the amount and the angle of location of the correction in the right hand plane can be taken. These readings will be independent of any unbalance in the locked plane as it will have no moment about the fixed pivot.

2. A trial mass at a known radius is then attached to the right-hand plane and the amplitude of oscillation of the cradle is noted.
3. The procedure is repeated at various angular positions with the same trial mass.
4. A graph is then plotted of amplitude vs. angular positions of the trial mass to know the optimum angular position for which amplitude is minimum. Then at this position, the magnitude of the trial mass is varied and the exact amount is found by trial and error which reduces the unbalance to almost zero.
5. After obtaining the unbalance in one plane, the cradle is locked in the right-hand pivot and released in the left-hand pivot. The above procedure is repeated to obtain the exact balancing mass required in that plane.
6. Usually, a large number of test runs are required to determine the exact balance masses in this type of machine. However, by adopting the following procedure, the balance masses can be obtained by making only four test runs.

First, make a test run without attaching any trial mass and note down the amplitude of the cradle vibrations. Then attach a trial mass m at some angular position and note down the amplitude of the cradle vibrations by moving the rotor at the same speed. Next detach the trial mass and again attach it at a 90° angular position relative to the first position at the same radial distance. Note down the amplitude by rotating the rotor at the same speed. Take the last reading in the same manner by fixing the trial mass at 180°. Let the four readings be

Trial mass	*Amplitude*
0	X_1
m at 0°	X_2
m at 90°	X_3
m at 180°	X_4

Make the following construction (Fig. 14.48):

Draw a triangle OBE by taking $OE = 2X_1$, $OB = X_2$ and $BE = X_4$. Mark the mid-point A on OE. Join AB.

Now,

$$\mathbf{OB} = \mathbf{OA} + \mathbf{AB}$$

where

OB = Effect of unbalance mass + Effect of the trial mass at 0°.

OA = Effect of unbalanced mass

Thus, **AB** represents the effect of the attached mass at 0°. The proof is as follows:

Extend BA to D such that $AD = AB$. Join OD and DE.

Now when the mass m is attached at 180° at the same radial distance and speed, the effect must be equal and opposite to the effect at 0°, i.e., if **AB** represents the effect of the attached mass at 0°, **AD** represents the effect of the attached mass at 180°.

Since

$$\mathbf{OD} = \mathbf{OA} + \mathbf{AD}$$

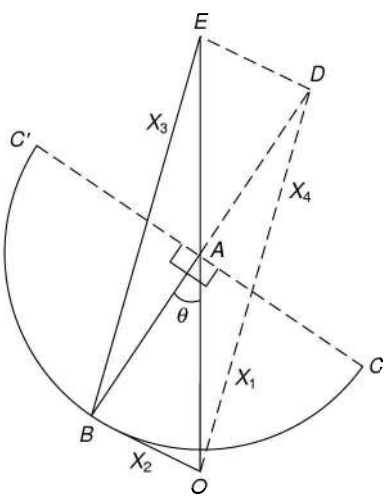

Fig. 14.48

OD must represent the combined effect of unbalance mass and the effect of the trial mass at 180° ($X4$)

Now, as the diagonals of the quadrilateral $OBED$ bisect each other at A, it is a parallelogram which means

BE is parallel and equal to *OD*. Thus, *BE* also represents the combined effect of unbalance mass and the effect of the trial mass at 180° or *X*4 which is true as it is made in the construction.

Now as *OA* represents the unbalance, the correction has to be equal and opposite of it or *AO*. Thus, the correction mass is given by

$$\frac{m_c}{m} = \frac{OA}{AB}$$

or $\quad m_c = m.\dfrac{OA}{AB}$ at an angle θ from the second reading at 0°.

For the correction of the unbalance, the mass *mc* has to be put in the proper direction relative to *AB* which may be found by considering the reading X_3.

Draw a circle with *A* as centre and *AB* as the radius. As the trial mass as well as the speed of the test run at 90° is the same, the magnitude must be equal to *AB* or *AD*, and *AC* or *AC′* must represent the effect of the trial mass. If *OC* represents X_3 then angle is opposite to the direction of angle measurement. If *OC′* represents X_3 then angle measurement is taken in the same direction.

Example 14.25 *During the balancing of a rotor using a trial mass of 600 g, the four readings of the amplitude of the cradle taken are as follows:*

Trial mass	*Amplitude*
0	6.2 mm (X_1)
at 0°	9.8 mm (X_2)
at 90°	15.0 mm (X_3)
at 180°	12.4 mm (X_4)

Find the magnitude and location of the correction mass to balance the rotor.

Solution Draw a triangle *OBE* by taking $OE = 2X_1$, $OB = X_2$ and $BE = X_4$. Mark the mid-point *A* on *OE*. Join *AB* (Fig.14.49). On measurement, *AB* = 9.3 mm and $\theta = 75°$.

Then

$$m_c = m.\frac{OA}{AB} = 600 \times \frac{6.2}{9.3} = 400\text{ g}$$

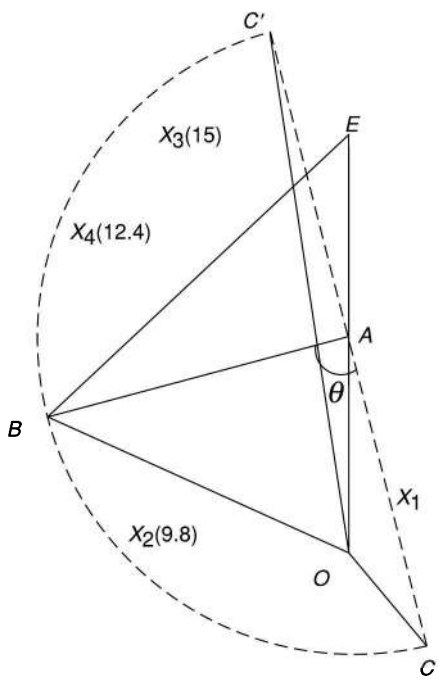

Fig. 14.49

As X_3 is found to be equal to *OC′* which means the readings are taken clockwise and since for complete balancing *AB* should merge with *AO*, the mass is attached at 75° counter-clockwise from the direction of the second reading.

14.15 FIELD BALANCING

In heavy machinery like turbines and generators, it is not possible to balance the rotors by mounting them in the balancing machines. In such cases, the balancing has to be done under normal conditions on its own bearings. Assume the two balancing planes of a rotor to be A and B (Fig. 14.50).

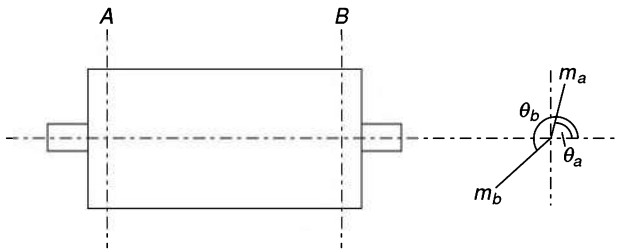

Fig. 14.50

1. First, the rotor is rotated at a speed which provides measurable amplitudes at planes A and B. Let the vectors **A** and **B** represent the amplitudes due to the unbalance of the rotor in planes A and B respectively.
2. Attach a trial mass m_a in the plane A at a known radius and known angular position and run the rotor at the same speed as in the first case. Measure the amplitudes in the two planes A and B. Let $\mathbf{A_1}$ and $\mathbf{B_1}$ represent the amplitudes of the rotor in planes A and B respectively. Thus
   Effect at A of the unbalance + Effect at A of trial mass in plane $A = \mathbf{A_1}$
   $\therefore$ Effect at A of trial mass in plane $A = \mathbf{A_1} - \mathbf{A}$
   Effect at B of the unbalance + Effect at B of trial mass in plane $A = \mathbf{B_1}$
   $\therefore$ Effect at B of trial mass in plane $A = \mathbf{B_1} - \mathbf{B}$
3. Make a third run of the rotor by attaching a trial mass m_b in plane B at a known radius and known angular position and run the rotor at the same speed as in the first two cases. Measure the amplitudes in the two planes A and B. Let $\mathbf{A_2}$ and $\mathbf{B_2}$ represent the amplitudes of the rotor in planes A and B respectively. Thus
   Effect at A of the unbalance + Effect at A of trial mass in plane $B = \mathbf{A_2}$
   $\therefore$ Effect at A of trial mass in plane $B = \mathbf{A_2} - \mathbf{A}$
   Effect at B of the unbalance + Effect at B of trial mass in plane $B = \mathbf{B_2}$
   $\therefore$ Effect at B of trial mass in plane $B = \mathbf{B_2} - \mathbf{B}$

Let m_{ca} and m_{cb} be the counter or balancing masses in planes A and B respectively placed at the same radii as the trial masses.

Let $m_{ca} = \alpha \times m_a$ and $m_{cb} = \beta \times m_b$

where $\alpha = a.e^{i\theta_a}$, i.e., the countermass in the plane A is a times the trial mass located at an angle θ_a with its direction.

and $\beta = b.e^{i\theta_b}$, i.e., the countermass in plane B is b times the trial mass located at an angle θ_b with its direction.

For complete balancing of the rotor, the effect of the balancing masses must be to nullify the unbalance in the two planes, i.e., in the plane A it must be equal to $-\mathbf{A}$ and in plane B equal to $-\mathbf{B}$.

Thus

$$\alpha (A_1 - A) + \beta (A_2 - A) = -A \quad \text{(i)}$$

and

$$\alpha (B_1 - B) + \beta (B_2 - B) = -B \quad \text{(ii)}$$

These equations can be solved for α and β. Multiplying (i) with $(B_2 - B)$ and (ii) with $(A_2 - A)$,

$$\alpha (A_1 - A)(B_2 - B) + \beta (A_2 - A)(B_2 - B) = -A(B_2 - B) \quad \text{(iii)}$$

$$\alpha (A_2 - A)(B_1 - B) + \beta (A_2 - A)(B_2 - B) = -B(A_2 - A) \quad \text{(iv)}$$

Subtracting (iv) from (iii),

$$\alpha\,[(A_1 - A)\,(B_2 - B) - (A_2 - A)\,(B_1 - B)] = B(A_2 - A) - A(B_2 - B)$$

or
$$\alpha = \frac{B(A_2 - A) - A(B_2 - B)}{(A_1 - A)(B_2 - B) - (A_2 - A)(B_1 - B)} \tag{14.42}$$

Multiplying (i) with $(B_1 - B)$ and (ii) with $(A_1 - A)$,

$$\alpha\,(A_1 - A)\,(B_1 - B) + \beta\,(A_2 - A)\,(B_1 - B) = -A(B_1 - B) \tag{v}$$

$$\alpha\,(A_1 - A)\,(B_1 - B) + \beta\,(A_1 - A)\,(B_2 - B) = -B(A_1 - A) \tag{vi}$$

Subtracting (v) from (vi),

$$\beta\,[(A_1 - A)\,(B_2 - B) - (A_2 - A)\,(B_1 - B)] = -B(A_1 - A) + A(B_1 - B)$$

or
$$\beta = \frac{A(B_1 - B) - B(A_1 - A)}{(A_1 - A)(B_2 - B) - (A_2 - A)(B_1 - B)} \tag{14.43}$$

Example 14.26 *While balancing a turbine rotor by the field balancing technique, the results are obtained as shown in Table 14.7. Find the correct balance masses to be placed in planes A and B at the same radii as for the trial masses. Also, find the angular positions of the balance masses with respect to trial masses to have the complete dynamic balance of the rotor.*

Solution For the sake of simplicity, the multiplier 10^{-3} in the vectors A, A_1, A_2 and B, B_1, B_2 have been omitted which does not affect the end result.

As $e^{i\theta} = \cos\theta + j\sin\theta$

$\mathbf{A} = 2.5\,\angle 20^\circ = 2.5\,(\cos 20^\circ + j\sin 20^\circ) = 2.349 + 0.855\,j$

$\mathbf{A_1} = 4.2\,(\cos 100^\circ + j\sin 100^\circ) = -0.729 + 4.136\,j$

$\mathbf{A_2} = 3.6\,(\cos 55^\circ + j\sin 55^\circ) = -2.065 + 2.949\,j$

$\mathbf{B} = 4.5\,\angle 60^\circ = 4.5(\cos 60^\circ + j\sin 60^\circ) = 2.25 + 3.897\,j$

$\mathbf{B_1} = 3.4\,(\cos 125^\circ + j\sin 125^\circ) = -1.95 + 2.785\,j$

$\mathbf{B_2} = 2.6\,(\cos 210^\circ + j\sin 210^\circ) = -2.25 - 1.3\,j$

$\mathbf{A_1} - \mathbf{A} = -0.729 + 4.136\,j - (2.349 + 0.855\,j) = -3.078 + 3.281\,j = 4.5\,e^{i(133.2^\circ)}$

Similarly, $\mathbf{A_2} - \mathbf{A} = -0.284 + 2.094\,j = 2.113\,e^{i(97.7^\circ)}$

$\mathbf{B_1} - \mathbf{B} = -4.2 - 1.112\,j = 4.345\,e^{i(194.8^\circ)}$

$\mathbf{B_2} - \mathbf{B} = -4.5 - i\,5.197 = 6.875\,e^{i(229.1^\circ)}$

or writing the vectors in the polar mode and using the complex mode of the calculator,

$\mathbf{A} = 2.5\,\angle 20^\circ$; $\mathbf{A_1} = 4.2\,\angle 100^\circ$; $\mathbf{A_2} = 3.6\,\angle 55^\circ$

$\mathbf{B} = 4.5\,\angle 60^\circ$; $\mathbf{B_1} = 3.4\,\angle 125^\circ$; $\mathbf{B_2} = 2.6\,\angle 210^\circ$

$\mathbf{A_1} - \mathbf{A} = 4.5\,\angle 133.2^\circ$; $\mathbf{A_2} - \mathbf{A} = 2.113\,\angle 97.7^\circ$;

$\mathbf{B_1} - \mathbf{B} = 4.345\,\angle 194.8^\circ$; $\mathbf{B_2} - \mathbf{B} = 6.875\,\angle 229.1^\circ$

These values of vector differences can also be obtained graphically as shown in Fig. 14.51 (a) and (b).

Table 14.7

		Plane A		*Plane B*	
No.	*Trial mass (kg)*	*Amplitude (mm)*	*Phase angle (degrees)*	*Amplitude (mm)*	*Phase angle (degrees)*
1.	0	2.5×10^{-3}	20	4.5×10^{-3}	60
2.	3 (in plane *A*)	4.2×10^{-3}	100	3.4×10^{-3}	125
3.	3(in plane *B*)	3.6×10^{-3}	55	2.6×10^{-3}	210

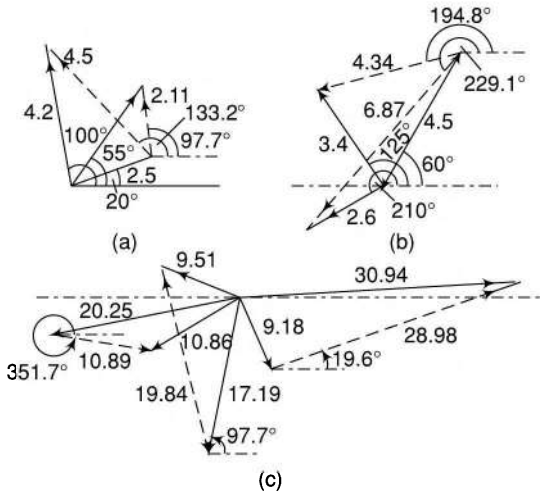

Fig. 14.51

Now, $$\alpha = \frac{\boldsymbol{B}(\boldsymbol{A}_2 - \boldsymbol{A}) - \boldsymbol{A}(\boldsymbol{B}_2 - \boldsymbol{B})}{(\boldsymbol{A}_1 - \boldsymbol{A})(\boldsymbol{B}_2 - \boldsymbol{B}) - (\boldsymbol{A}_2 - \boldsymbol{A})(\boldsymbol{B}_1 - \boldsymbol{B})}$$

[Eq. 14.42]

or $$\alpha = \frac{\begin{bmatrix} 4.5e^{i(60^\circ)} \times 2.113e^{i(97.7^\circ)} \\ -2.5e^{i(20^\circ)} \times 6.875e^{i(229.1^\circ)} \end{bmatrix}}{\begin{bmatrix} 4.5e^{i(133.2^\circ)} \times 6.875e^{i(229.1^\circ)} \\ -2.113e^{i(97.7^\circ)} \times 4.345e^{i(194.8^\circ)} \end{bmatrix}}$$

$$= \frac{9.51e^{i(157.7^\circ)} - 17.188e^{i(249.1^\circ)}}{30.94e^{i(2.3^\circ)} - 9.18e^{i(292.5^\circ)}}$$

The numerator and the denominator can be solved analytically or graphically [Fig.14.51(c)].

i.e.,

$$\alpha = \frac{19.84e^{i(97.7^\circ)}}{28.98e^{i(19.6^\circ)}} = 0.685\, e^{i(78.1^\circ)}$$

Similarly,

$$\beta = \frac{\boldsymbol{A}(\boldsymbol{B}_1 - \boldsymbol{B}) - \boldsymbol{B}(\boldsymbol{A}_1 - \boldsymbol{A})}{(\boldsymbol{A}_1 - \boldsymbol{A})(\boldsymbol{B}_2 - \boldsymbol{B}) - (\boldsymbol{A}_2 - \boldsymbol{A})(\boldsymbol{B}_1 - \boldsymbol{B})}$$

[Eq. 14.43)]

or $$\beta = \frac{\begin{bmatrix} 2.5e^{i(20^\circ)} \times 4.345e^{i(194.8^\circ)} \\ -4.5e^{i(60^\circ)} \times 4.5e^{i(133.2^\circ)} \end{bmatrix}}{\begin{bmatrix} 4.5e^{i(133.2^\circ)} \times 6.875e^{i(229.1^\circ)} \\ -2.113e^{i(97.7^\circ)} \times 4.345e^{i(194.8^\circ)} \end{bmatrix}}$$

$$= \frac{10.86e^{i(214.8^\circ)} - 20.25e^{i(193.2^\circ)}}{30.94e^{i(2.3^\circ)} - 9.18e^{i(292.5^\circ)}}$$

$$= \frac{10.895e^{i(351.7^\circ)}}{28.98e^{i(19.6^\circ)}} = 0.376\, e^{i(332.1^\circ)}$$

Thus, the balance mass in the plane A
$= 0.685 \times 3 = 2.055$ kg

Angular position = 78.1° counter-clockwise with the direction of trial mass in the plane A.

Similarly, the balance mass in plane B
$= 0.376 \times 3 = 1.128$ kg

Angular position = 332.1° counter-clockwise with the direction of trial mass in the plane B.

Summary

1. A system of rotating masses is said to be in *static balance* if the combined mass centre of the system lies on the axis of rotation.
2. Several masses rotating in different planes are said to be in *dynamic balance* when there does not exist any resultant centrifugal force as well as the resultant couple.
3. Balancing of a *linkage* implies that the total centre of its mass remains stationary so that the vector sum of all the frame forces always remains zero.
4. *Primary accelerating force* in a reciprocating engine is $mr\omega^2 \cos\theta$ along the line of stroke.
5. *Secondary accelerating force* in a reciprocating engine is $mr\omega^2 \cos(2\theta)/n$ along the line of stroke.
6. In reciprocating engines, unbalanced forces along the line of stroke are more harmful than the forces perpendicular to the line of stroke.
7. In locomotives, *hammer-blow* is the maximum vertical unbalanced force caused by the mass to balance the reciprocating masses and *swaying couple* tends to make the leading wheels sway from side to side due to unbalanced primary forces along the lines of stroke.
8. The effect of the secondary force is equivalent

to an imaginary crank of length $r/4n$ rotating at double the angular velocity, i.e., twice of the engine speed.

9. For complete balancing of the reciprocating parts, the primary forces and primary couples as well as the secondary forces and secondary couples must balance.
10. If a reciprocating mass is transferred to the crank pin, the axial component of the resulting centrifugal force along the cylinder axis is the primary unbalanced force.
11. A six-cylinder four-stroke engine is a completely balanced engine.
12. In V-engines, a common crank is operated by two connecting rods at some angle.
13. In radial engines with a number of connecting rods and a common crank, the analysis is much simplified by using the method of *direct and reverse cranks*.
14. A *balancing machine* is able to indicate whether a part is in balance or not and if it is not, then it measures the unbalance by indicating its magnitude and location.
15. *Field balancing* is adopted in heavy machinery like turbines and generators where it is not possible to balance the rotors by mounting them on the balancing machines.

Exercises

1. Why is balancing necessary for rotors of high-speed engines?
2. What is meant by static and dynamic unbalance in machinery? How can the balancing be done?
3. Two masses in different planes are necessary to rectify the dynamic unbalance. Comment.
4. Explain the method of finding the countermasses in two planes to balance the dynamic unbalance of rotating masses.
5. What do you mean by force balancing of linkages? How is it achieved? Explain.
6. What do you mean by primary and secondary unbalance in reciprocating engines?
7. Deduce expressions for variation in tractive force, swaying couple and hammer blow for an uncoupled two cylinder locomotive engine.
8. Determine the unbalanced forces and couples in case of following in-line engines:
   (i) two-cylinder engine
   (ii) four-cylinder four-stroke engine
   (iii) six-clinder four-stroke engine.
9. Find the magnitudes of the unbalanced primary and secondary forces in V-engines. Deduce the expressions when the lines of stroke of the two cylinders are at 60° and 90° to each other.
10. Explain the method of direct and reverse cranks to determine the unbalance forces in radial engines.
11. What do you mean by balancing machines? Describe any one type of a static balancing machine.
12. Describe the function of a pivoted-cradle balancing machine with the help of a neat sketch. Show that it is possible to make only four test runs to obtain the balance masses in such a machine.
13. What is field balancing of rotors? Explain the procedure.
14. The rotor shown in Fig. 14.2(a) has the following properties:
    $m_1 = 3$ kg $r_1 = 30$ mm $\theta_1 = 30°$
    $m_2 = 4$ kg $r_2 = 20$ mm $\theta_2 = 120°$
    $m_3 = 2$ kg $r_3 = 25$ mm $\theta_3 = 270°$
    Find the amount of the countermass of a radial distance of 35 mm for the static balance.
    (2.13 kg; 239.4°)
15. The rotor shown in Fig. 14.6(a) has the following properties:
    $m_1 = 3$ kg $r_1 = 30$ mm $\theta_1 = 30°$ $l_1 = 100$ mm
    $m_2 = 4$ kg $r_2 = 20$ mm $\theta_2 = 120°$ $l_2 = 300$ mm
    $m_3 = 2$ kg $r_3 = 25$ mm $\theta_3 = 270°$ $l_3 = 600$ mm
    $r_{c1} = 35$ mm and $r_{c2} = 20$ mm
    l_1, l_2 and l_3 are the distances from the bearing 1. The axial distance between the bearings is 500 mm. Determine the countermass to be placed in the places of m_1 and a mid-plane of m_2 and m_3 for the complete balance.
    ($m_{c1} = 1.96$ kg, 54.3°; $m_{c2} = 3.25$ kg, 238.2°)
16. A rotor has the following properties:

Mass	Magnitude	Radius	Angle	Axial distance from 1st mass
1	9 kg	100 mm	0°	
2	7 kg	120 mm	60°	160 mm
3	8 kg	140 mm	135°	320 mm
4	6 kg	120 mm	270°	560 mm

If the shaft is balanced by two countermasses

located at 100 mm radii and revolving in planes midway of planes 1 and 2, and midway of 3 and 4, determine the magnitude of the masses and their respective angular positions.

(6.9 kg, 23°; 15.8 kg, 222.6°)

17. Four masses *A*, *B*, *C* and *D* are completely balanced. Masses *C* and *D* make angles of 90° and 210° respectively with *B* in the same sense. The planes containing *B* and *C* are 300 mm apart. Masses *A*, *B*, *C* and *D* can be assumed to be concentrated at radii of 360, 480, 240 and 300 mm respectively. The masses *B*, *C* and *D* are 15 kg, 25 kg and 20 kg respectively. Determine the
    (i) mass *A* and its angular position
    (ii) positions of planes *A* and *D*

    (10 kg, 236°; A is 985 mm towards right and *D* is 378 mm towards left of plane B)

18. A single-cylinder reciprocating engine has a reciprocating mass of 60 kg. The crank rotates at 60 rpm and the stroke is 320 mm. The mass of the revolving parts at 160 mm radius is 40 kg. If two-thirds of the reciprocating parts and the whole of the reciprocating parts and the whole of the revolving parts are to be balanced, determine the
    (i) balance mass required at a radius of 350 mm
    (ii) unbalanced force when the crank has turned 50° from the top-dead centre

    (36.57 kg; 209.9 N)

19. The cranks of a three-cylinder locomotive are set at 120°. The reciprocating masses are 450 kg for the cylinder and 390 kg for each outside cylinder. The pitch of the cylinders is 1.2 m and the stroke of each piston is 500 mm. The planes of rotation of the balance masses are 960 mm from the inside cylinder. If 40% of the reciprocating masses are to be balanced, determine the magnitude and the position of the balancing masses required at a radial distance of 500 mm, and the hammer-blow per wheel when the axle rotates at 350 rpm.

    (86.25 kg each at 24° and 216°; 57.9 kN)

20. The firing order of a six-cylinder vertical four-stroke in-line engine is 142635. The piston stroke is 80 mm and the length of each connecting rod is 180 mm. The pitch distances between the cylinder centre lines are 80 mm, 80 mm, 120 mm, 80 mm and 80 mm respectively. The reciprocating mass per cylinder is 1.2 kg and the engine speed is 2400 rpm. Determine the out of balance primary and secondary forces and couples on the engine taking a plane midway between the cylinders 3 and 4 as the reference plane.

    (Completely balanced engine; no out of balance primary and secondary forces and couples)

21. A four-cylinder engine is arranged as shown in Fig. 14.22. The reciprocating masses in planes 1 and 4 are each 142 kg and in planes 2 and 3 are each 200 kg. If the crank radii are 400 mm each, the speed 200 rpm and the length of the connecting rod is 1.6 m, determine the magnitude of primary and secondary forces and couples. Given that $\alpha = 25°$, $\beta = 50°$, $l_1 = 1.28$ m and $l_2 = 0.5$ m.

    (Primary forces and couples are zero; Secondary force = 4959 N; Secondary couple = 20.85 kN.m)

22. The cylinders of a V-engine are set at an angle of 40° with both cylinders connected to a common crank. The connecting rod is 300 mm long and the crank radius is 60 mm. The reciprocating mass is 1 kg per cylinder whereas the rotating mass at the crank pin is 1.5 kg. A balance mass equivalent to 1.8 kg is also fitted opposite to the crank at a radius of 80 mm. Determine the maximum and the minimum values of the primary and secondary forces due to inertia of the reciprocating and rotating masses if the engine rotates at 900 rpm.

    (461.4 N, 354.9 N; 153.4 N, 46.9 N)

23. Two outer cranks of a four-crank engine are set at 120° to each other with each reciprocating mass as 400 kg. The spacing between the planes of rotation of adjacent cranks are 450 mm, 750 mm and 600 mm. Determine the reciprocating mass and the relative angular position of each of the inner cranks if the engine is to be in complete primary balance. Also, determine the maximum secondary unbalanced force if the length of the crank and the connecting rod are 300 mm and 1200 mm respectively and the speed is 240 rpm.

    (878 kg, 314°; 853 kg, 162°, 90 kN)

24. Each crank of a four-cylinder vertical engine is 225 mm. The reciprocating masses of the first, second and the fourth cranks are 100 kg, 120 kg and 100 kg and the planes of rotation are 600 mm, 300 mm and 300 mm from the plane of rotation of the third crank. Determine the mass of the reciprocating parts of the third cylinder and the relative angular positions of the cranks if the engine is in complete primary balance.

    (120 kg; $\theta_1 = 0°$, $\theta_2 = 157.7°$, $\theta_3 = 229.5°$, $\theta_4 = 27.2°$)

25. The connecting rods of a three-cylinder air compressor are coupled to a single crank and the axes are at 120° to one another. Each connecting rod is 180 mm long and the stroke is 120 mm. The reciprocating parts have a mass of 1.8 kg per

cylinder. Find the magnitude of the primary and secondary forces when the engine runs at 1200 rpm.

(2.558 kN, 852.7 N)

26. A radial aero-engine has nine cylinders equally spaced with all the connecting rods coupled to a common crank. The crank and each of the connecting rods are 140 mm and 540 mm respectively. The reciprocating mass per cylinder is 2.4 kg. Determine the magnitude and the angular position of the balance masses required at the crank radius for complete primary and secondary balancing of the engine. (10.8 kg)

27. While balancing a turbine rotor by the field balancing technique, the results obtained are shown in Table 14.8.

    Find the correct balance masses to be placed in planes *A* and *B* at the same radii as for the trial masses. Also, find the angular positions of the balance masses with respect to trial masses to have the complete dynamic balance of the rotor.

    (2.62 kg, 71.3°; 1.304 kg, 340.8°)

Table 14.8

		Plane A		*Plane B*	
No.	*Trial mass (Kg)*	*Amplitude (mm)*	*Phase angle (degrees)*	*Amplitude (mm)*	*Phase angle (degrees)*
1	0	3×10^{-3}	25	5×10^{-3}	70
2	3 (in plane *A*)	4.5×10^{-3}	110	3.8×10^{-3}	135
3	3 (in plane *B*)	4×10^{-3}	60	3.2×10^{-3}	215

15 BRAKES AND DYNAMOMETERS

Introduction

A *brake* is an appliance used to apply frictional resistance to a moving body to stop or retard it by absorbing its kinetic energy. In general, in all types of motion, there is always some amount of resistance which retards the motion and is sufficient to bring the body to rest. However, the time taken and the distance covered in this process is usually too large. By providing brakes, the external resistance is considerably increased and the period of retardation shortened.

A *dynamometer* is a brake incorporating a device to measure the frictional resistance applied. This is used to determine the power developed by the machine, while maintaining its speed at the rated value.

The functional difference between a clutch and a brake is that a clutch connects two moving members of a machine whereas a brake connects a moving member to a stationary member.

15.1 TYPES OF BRAKES

The following are the main types of mechanical brakes:

(i) Block or shoe brake
(ii) Band brake
(iii) Band and block brake
(iv) Internal expanding shoe brake

15.2 BLOCK OR SHOE BRAKE

A block or shoe brake consists of a block or shoe which is pressed against a rotating drum. The force on the drum is increased by using a lever [Fig. 15.1(a)]. If only one block is used for the purpose, a side thrust on the bearing of the shaft supporting the drum will act. This can be prevented by using two blocks on the two sides of the drum [Fig.15.1(b)]. This also doubles the braking torque.

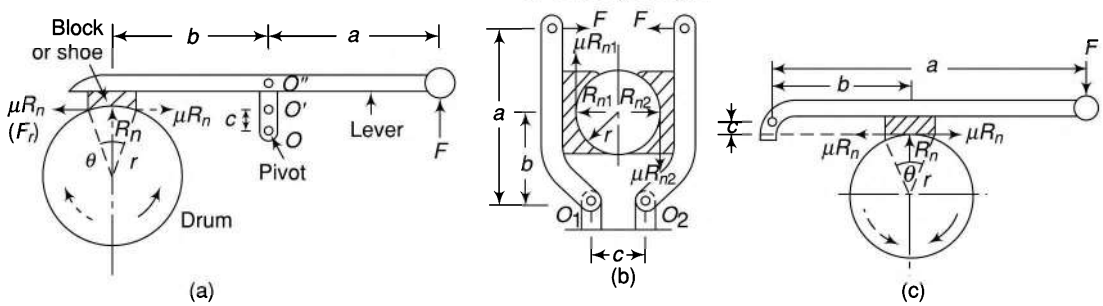

Fig. 15.1

A material softer than that of the drum or the rim of the wheel is used to make the blocks so that these can be replaced easily on wearing. Wood and rubber are used for light and slow vehicles and cast steel for heavy and fast ones.

Let r = radius of the drum

μ = coefficient of friction

F_r = radial force applied on the drum (not shown in the figure)

R_n = normal reaction on the block (= F_r)

F = force applied at the lever end

F_f = frictional force = μR_n

Assuming that the normal reaction R_n and frictional force F_f act at the mid-point of the block,

Braking torque on the drum = frictional force × radius

or

$$T_B = \mu R_n \times r \tag{15.1}$$

To obtain R_n, consider the equilibrium of the block as follows.

The direction of the frictional force on the drum is to be opposite to that of its rotation while on the block it is in the same direction. Taking moments about the pivot O [Fig. 15.1(a)],

$$F \times a - R_n \times b + \mu R_n \times c = 0$$

$$R_n = \frac{Fa}{b - \mu c} \tag{15.2}$$

Also

$$F = R_n \frac{b - \mu c}{a} \tag{15.3}$$

- When $b = \mu c$, $F = 0$, which implies that the force needed to apply the brake is virtually zero, or that once contact is made between the block and the drum, the brake is applied itself. Such a brake is known as a *self-locking brake*.
- As the moment of the force F_f about O is in the same direction as that of the applied force F, F_f aids in applying the brake. Such a brake is known as a *self-energised brake*.
- If the rotation of the drum is reversed, i.e., it is made clockwise,

  $$F = R_n [(b + \mu c)/a]$$

  which shows that the required force F will be far greater than what it would be when the drum rotates counter-clockwise.
- If the pivot lies on the line of action of F_f, i.e., at O', $c = 0$ and $F = R_n \dfrac{a}{b}$, which is valid for clockwise as well as for counter-clockwise rotation.
- If c is made negative, i.e., if the pivot is at O'',

  $$F = R_n \left(\frac{b + \mu c}{a} \right) \text{ for counter-clockwise rotation}$$

  and

  $$F = R_n \left(\frac{b - \mu c}{a} \right) \text{ for clockwise rotation}$$

∞ In case the pivot is provided on the same side of the applied force and the block as shown in Fig. 15.1(c), the equilibrium condition can be considered accordingly.

In the above treatment, it is assumed that the normal reaction and the frictional force act at the mid-point of the block. However, this is true only for small angles of contact. When the angle of contact is more than 40Υ, the normal pressure is less at the ends than at the centre. In that case, μ has to be replaced by an equivalent coefficient of friction μ' given by

$$\mu' = \mu\left(\frac{4\sin\left(\frac{\theta}{2}\right)}{\theta + \sin\theta}\right)$$

Example 15.1 *Two block brakes are shown in Figs. 15.2(a) and (b). The diameter of the brake drum in each case is 1 m. Each brake sustains 240 N.m of torque at 400 rpm. The coefficient of friction is 0.32. Determine the required force to be applied when the angle of contact in the two cases are 35° and 100°. Also, find the new values of c for self-locking of the brake.*

Assume the rotation of the drum to be both clockwise and counter-clockwise.

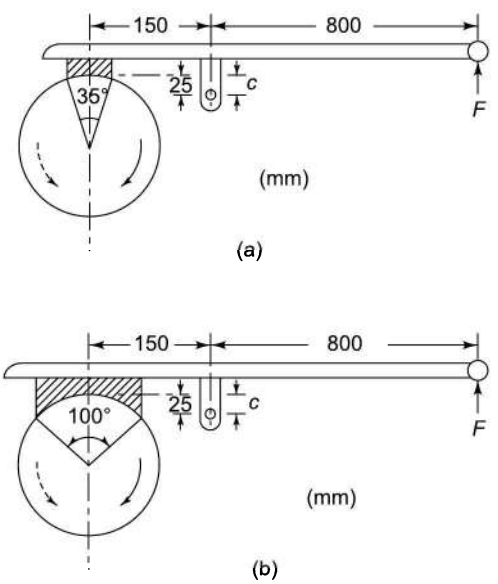

Fig. 15.2

Solution

$T_B = 240$ N.m, $r = 0.5$ m

(a) *Angle of contact = 35°.*

$\mu = 0.32$

$T_B = \mu R_n r$

$240 = 0.32 \times R_n \times 0.5$

$R_n = 1500$ N

Rotation clockwise

$F.a - R_n b - \mu R_n.c = 0$

$F \times 0.8 - 1500 \times 0.15 - 0.32 \times 1500 \times 0.025 = 0$

$F \times 0.8 - 225 - 12 = 0$

$F = \underline{296.25 \text{ N}}$

Rotation counter-clockwise

$F \times 0.8 - 1500 \times 0.15 + 32 \times 1500 \times 0.025 = 0$

$F = \underline{266.25 \text{ N}}$

For self-locking, F is to be zero. For a positive value of c this is possible for counter-clockwise rotation of the drum, i.e., when

$$0 - 1500 \times 0.15 + 0.32 \times 1500 \times c = 0$$

or $$c = \frac{0.15}{0.32} = 0.469 \text{ m or } \underline{469 \text{ mm}}$$

(b) Angle of contact = 100°

$$\mu' = \mu\left(\frac{4\sin(\theta/2)}{\theta + \sin\theta}\right)$$

$$= 0.32\left(\frac{4\sin 50°}{100 \times \frac{\pi}{180} + \sin 100°}\right) = 0.36$$

$T_B = \mu' R_n r$

$240 = 0.36 \times R_n \times 0.5$

$R_n = 1333$ N

Rotation clockwise

$F \times 0.8 - 1333 \times 0.15 - 0.36 \times 1333 \times 0.025 = 0$

$0.8\,F - 200 - 12 = 0$

$F = \underline{265\text{ N}}$

Rotation counter-clockwise

$F \times 0.8 - 1333 \times 0.15 + 0.36 \times 1333 \times 0.025 = 0$

$0.8\,F - 200 + 12 = 0$

$F = \underline{235\text{ N}}$

For self-locking

$0 - 1333 \times 0.15 + 0.36 \times 1333 \times c = 0$

or $c = \dfrac{0.15}{0.36} = 0.417$ m or $\underline{417\text{ mm}}$

(*Note*: 400 rpm is the superfluous data in the problem)

Example 15.2 *A bicycle and rider, travelling at 12 km/h on a level road, have a mass of 105 kg. A brake is applied to the rear wheel which is 800 mm in diameter. The pressure on the brake is 80 N and the coefficient of friction is 0.06. Find the distance covered by the bicycle and number of turns of its wheel before coming to rest.*

Solution

$m = 105$ kg $\qquad d = 0.8$ m

$v = \dfrac{12000}{3600} = 3.333$ m/s $\qquad F_r = 80\text{ N} = R_n$

$\mu = 0.06$

Let s = distance covered by the bicycle before it comes to rest.

Work done against friction = KE of the bicycle and the rider

$$\mu R_n s = \frac{1}{2} m v^2$$

$$0.06 \times 80 \times s = \frac{1}{2} \times 105 \times (3.333)^2$$

$s = \underline{121.5\text{ m}}$

$\pi\, d\, n = s$

or $\pi \times 0.8 \times n = 121.5$

$n = 48.3$ revolutions

Example 15.3 *A brake drum of 440 mm in diameter is used in a braking system as shown in Fig. 15.3(a). The brake lever is inclined at an angle of 20° with the horizontal. A vertical force of 400-N magnitude is applied at the lever end. The coefficient of friction is 0.35. The brake drum has a mass of 160 kg and it rotates at 1500 rpm. Determine the*

(i) braking torque

(ii) number of revolutions made by the drum and the time taken before coming to rest from the instant the brake is applied

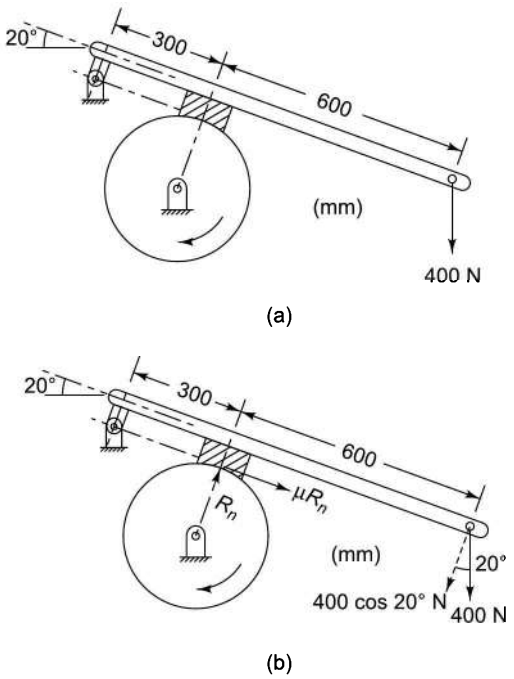

Fig. 15.3

Solution

$d = 440$ mm, $r = 220$ mm, $\mu = 0.35$, $m = 160$ kg, $N = 1500$ rpm, $F = 400 \cos 20°$N

Angle of contact is not given. It may be assumed small so that $\mu = 0.35$

The line of frictional force passes through the fulcrum.

(i) Taking moments about the fulcrum [Fig. 15.3(b)],

$400 \cos 20° \times 900 + \mu R_n \times 0 - R_n \times 300 = 0$

or $R_n = 1127.6$ N

$T_B = \mu R_n r = 0.35 \times 1127.6 \times 0.22 = 86.8$ N.m

(ii) Kinetic energy of the brake drum = Work done against friction

or $\frac{1}{2}mv^2 = T_B.\omega$

or $\frac{160}{2} \times \left(\frac{\pi \times 0.44 \times 1500}{60}\right)^2 = 86.8 \times 2\pi n$

or $80 \times 1194.2 = 545.4\, n$ or $n = 175$

Time taken, $t = \frac{n}{N} = \frac{175}{1500/60} = 7$ s

Example 15.4 *A spring-operated pivoted shoe brake shown in Fig. 15.4 (a) is used for a wheel diameter of 500 mm. The angle of contact is 90° and the coefficient of friction is 0.3. The force applied by the spring on each arm is 5 kN. Determine the brake torque on the wheel.*

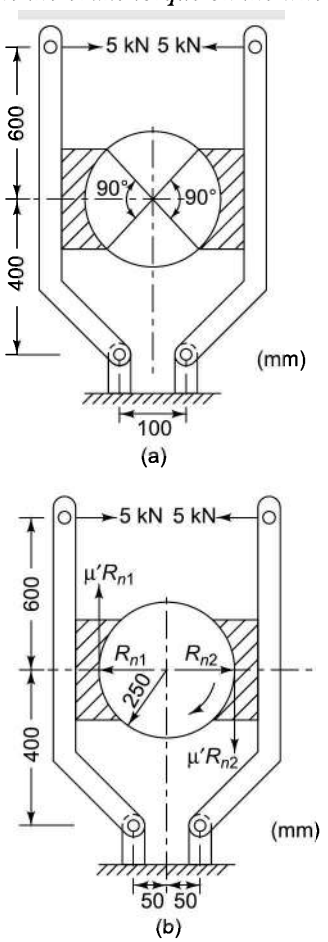

Fig. 15.4

Solution

$\mu = 0.3$;

$F = 5000$ N;

$d = 500$ mm,

$r = 250$ mm

Assuming the rotation to be clockwise, the various forces acting on the two blocks are shown in Fig. 15.4(b).

Now, $\mu' = \mu\left(\frac{4\sin(\theta/2)}{\theta + \sin\theta}\right)$

$= 0.3\left(\frac{4\sin 45°}{(\pi/2) + \sin 90°}\right) = 0.33$

For the left-hand side block, taking moments about O_1,

$F \times 1 - R_{n1} \times 0.4 + \mu' R_{n1} \times (0.25 - 0.05) = 0$

$5000 \times 1 - R_{n1} \times 0.4 + 0.33 \times R_{n1} \times 0.2 = 0$

$R_{n1} = 14\,970$ N

For the right-hand side block, taking moments about O_2,

$5000 \times 1 - R_{n2} \times 0.4 - 0.33 \times R_{n2} \times 0.2 = 0$

$R_{n2} = 10\,730$ N

Maximum braking torque, $T_B = \mu' (R_{n1} + R_{n2})\, r$

$= 0.33\,(14\,970 + 10\,730) \times 0.25$

$= 2120$ N.m

Example 15.5 *Figure 15.5(a) shows an arrangement of a double block shoe brake. The force to each block is applied by means of a turn buckle with right and left-handed threads of six-start with a lead of 40 mm. The diameter of the turn buckle is 20 mm and it is rotated by a lever. The angle subtended by each block is 80°. The coefficient of friction for the brake blocks is 0.3 and for the screw and the nut, 0.18. Determine the brake torque applied by a force of 80 N at the end of the lever.*

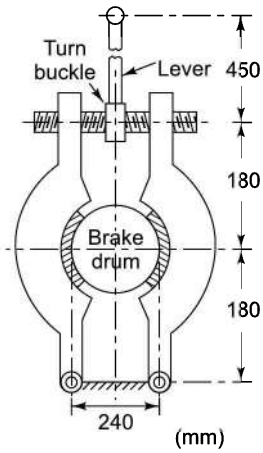

(a)

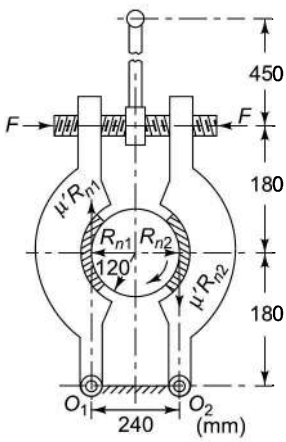

(b)

Fig. 15.5

Solution For screw and nut: lead = 40 mm, d = 20 mm, $\mu = 0.18$

For brake blocks, $\mu = 0.3$; For lever: $l = 450$ mm, $F' = 80$ N

Diameter of the brake drum = distance between the pivot = 240 mm

Assume the rotation of the drum to be clockwise. The various forces on the two blocks are shown in Fig. 15.5(b).

For the screw and nut,

$$\tan\alpha = \frac{\text{lead}}{\pi d} = \frac{40}{\pi \times 20} = 0.637$$

or $\alpha = 32.5°$

$\mu = 0.18$ or $\tan\phi = 0.18$ or $\phi = 10.2°$

Torque shared by each side of the spindle

$$= \frac{F' \times l}{2} = \frac{80 \times 450}{2} = 18\,000 \text{ N.mm}$$

If F be the force applied on each block along the screw axis,

$T = F \tan(\alpha + \varphi).r$ or 18 000

$= F \tan(32.5° + 10.2°) \times (20/2)$ or $F = 1951$ N

$$\mu' = \mu\left(\frac{4\sin(\theta/2)}{\theta + \sin\theta}\right)$$

$$= 0.3\left(\frac{4\sin 40°}{(80\pi/180) + \sin 80°}\right) = 0.324$$

For the left-hand side block, taking moments about O_1,

$$F \times 0.36 - R_{n1} \times 0.18 = 0$$

or $1951 \times 0.36 - R_{n1} \times 0.18 = 0$

or $R_{n1} = 3902$ N

For the right-hand side block, taking moments about O_2,

$F \times 0.36 - R_{n2} \times 0.18 = 0$ or $R_{n2} = R_{n1} = 3902$ N

Maximum braking torque, $T_B = \mu'(R_{n1} + R_{n2})\,r$ $= 0.324\,(2 \times 3902) \times 0.12 = 303.4$ N.m

Example 15.6 *A double-block brake is operated by a sprocket-and-chain mechanism as shown in Fig. 15.6. As a force F is applied at the end of the lever, the sprocket causes tensions in the chains. The brake drum diameter is 240 mm. The angle of contact of each block is 90°. Determine the force F required to apply the brake if a power of 1.6 kW at 300 rpm is being transmitted by the system.*

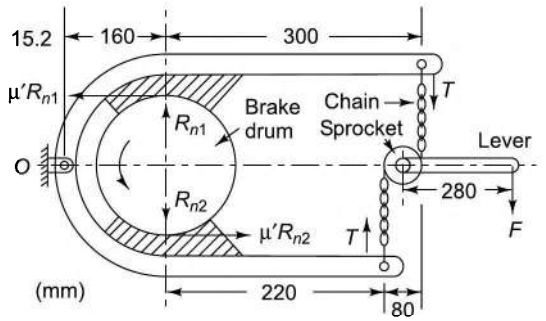

Fig. 15.6

Solution

$P = 1.6$ kW, $d = 240$ mm, $N = 300$ rpm, $\theta = 90°$

As the angle of contact is more than 40°,

$$\mu' = \mu\left(\frac{4\sin(\theta/2)}{\theta + \sin\theta}\right)$$

$$= 0.32\left(\frac{4\sin 45°}{90 \times \frac{\pi}{180} + \sin 90°}\right) = 0.385$$

Let T be the tension in the chains. Take moments about the centre of sprocket,

$$F \times 280 = T \times 40 + T \times 40 \quad \text{or} \quad T = 3.5\,F \qquad \text{(i)}$$

Upper shoe block: Let T be the tension in the chain. Taking moments about the fulcrum O,

$$T \times (160 + 300) - R_{n1} \times 160 - 0.385\,R_{n1} \times 120 = 0$$

$$\text{or } 460 \times 3.5\,F = 206.2\,R_{n1} \quad \text{or} \quad R_{n1} = 7.808\,F$$

Lower shoe block: Taking moments about the fulcrum O

$$T \times (160 + 220) - R_{n2} \times 160 + 0.385\,R_{n2} \times 120 = 0$$

$$\text{or } 380 \times 3.5\,F = 113.8\,R_{n2} \quad \text{or} \quad R_{n2} = 11.69\,F$$

or Maximum braking torque, $T_B = \mu'(R_{n1} + R_{n2})\,r$

$= 0.385\,(7.812\,F + 11.69\,F) \times 0.12$

$= 0.9$ F

As $P = T_B \times \omega$

$$1600 = 0.9\,F \times \frac{2\pi \times 300}{60}$$

$F = \underline{56.6 \text{ N}}$

15.3 BAND BRAKE

It consists of a rope, belt or flexible steel band (lined with friction material) which is pressed against the external surface of a cylindrical drum when the brake is applied. The force is applied at the free end of a lever (Fig. 15.7).

Brake torque on the drum = $(T_1 - T_2)\,r$
where r is the effective radius of the drum.

The ratio of the tight and the slack side tensions is given by $T_1/T_2 = e^{\mu\theta}$ on the assumption that the band is on the point of slipping on the drum.

The effectiveness of the force F depends upon the

- direction of rotation of the drum
- ratio of lengths a and b
- direction of the applied force F

To apply the brake to the rotating drum, the band has to be tightened on the drum. This is possible if

(i) F is applied in the downward direction when $a > b$
(ii) F is applied in the upward direction when $a < b$

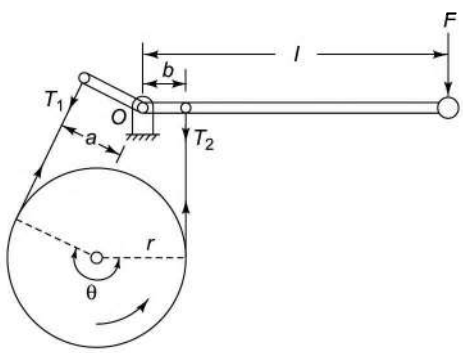

Fig. 15.7

If the force applied is not as above, the band is further loosened on the drum which means no braking effect is possible.

(i) $a > b$, F Downwards

(a) Rotation Counter-clockwise For counter-clockwise rotation of the drum, the tight and the slack sides of the band will be as shown in Fig. 15.7.

Considering the forces acting on the lever and taking moments about the pivot,

$$F\,l - T_1\,a + T_2\,b = 0$$

or

$$F = \frac{T_1 a - T_2 b}{l} \tag{15.4}$$

As $T_1 > T_2$ and $a > b$ under all conditions, the effectiveness of the brake will depend upon the force F.

(b) Rotation Clockwise In this case, the tight and the slack sides are reversed as shown in Fig. 15.8.

Now, $F\,l - T_2\,a + T_1\,b = 0$ or $F = \dfrac{T_2 a - T_1 b}{l}$

As $T_2 < T_1$ and $a > b$, the brake will be effective as long as $T_2.a$ is greater than $T_1.b$

or $T_2\,a > T_1\,b$ or $\dfrac{T_2}{T_1} > \dfrac{b}{a}$

i.e., as long as the ratio of T_2 to T_1 is greater than the ratio b/a.

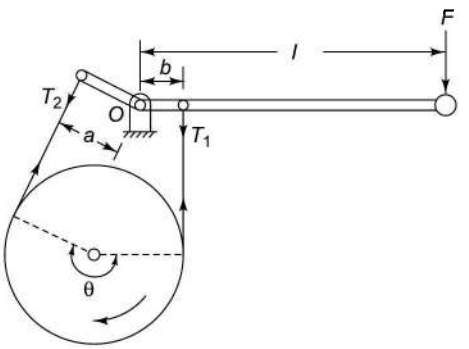

Fig. 15.8

When $\dfrac{T_2}{T_1} \le \dfrac{a}{b}$, F is zero or negative, i.e., the brake becomes self-locking as no force is needed to apply the brake. Once the brake has been engaged, no further force is required to stop the rotation of the drum.

(ii) $a < b$, F upwards

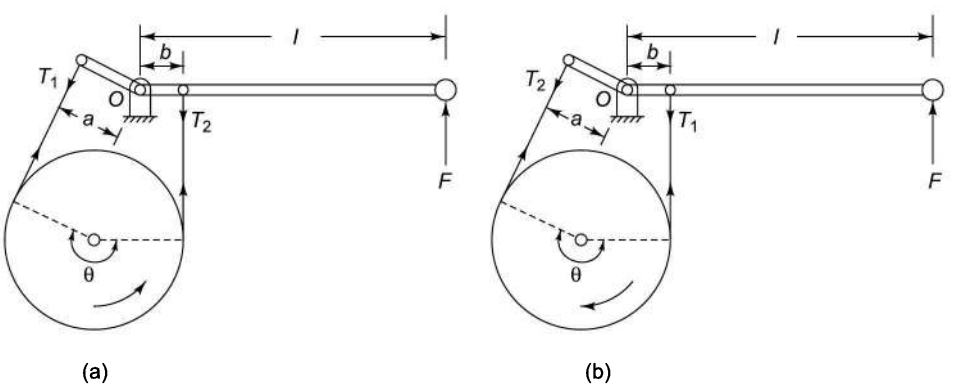

Fig. 15.9

(a) Rotation Counter-clockwise The tight and the slack sides will be as shown in Fig. 15.9(a). Therefore,

$$F\,l + T_1\,a - T_2\,b = 0$$

or
$$F = \frac{T_2 b - T_1 a}{l} \tag{15.5}$$

As $T_2 < T_1$ and $b > a$, the brake is operative only as long as

$$T_2\,b > T_1\,a \quad \text{or} \quad \frac{T_2}{T_1} > \frac{a}{b}$$

Once T_2/T_1 becomes equal to a/b, F required is zero and the brake becomes self-locking.

(b) Rotation Clockwise The tight and the slack sides are shown in Fig. 15.9(a).

From Fig. 15.9(b), $F\,l - T_1\,b + T_2\,a = 0$ or $F = \dfrac{T_1 b - T_2 a}{l}$

As $T_1 > T_2$ and $b > a$, under all conditions, the effectiveness of the brake will depend upon the force F.

- When $a = b$, the band cannot be tightened and thus, the brake cannot be applied.
- The band brake just discussed is known as a *differential band brake*. However, if either a or b is made zero, a *simple band brake* is obtained. If $b = 0$ (Fig.15.10) and F downwards,

$$F.l - T_1\,a = 0$$

or
$$F = T_1\,\frac{a}{l} \tag{15.6}$$

Similarly, the force can be found for the other cases.
Note that such a brake can neither have self-energising properties nor it can be self-locked.

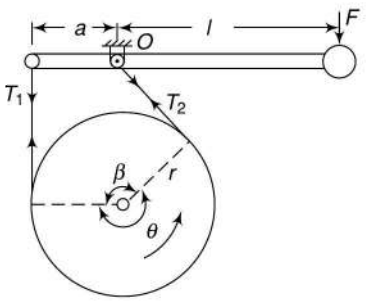

Fig. 15.10

- The brake is said to be more effective when maximum braking force is applied with the least effort F.
For case (i), when $a > b$ and F is downwards, the force (effort) F required is less when the rotation is clockwise assuming that the brake is effective.
For case (ii), when $a < b$ and F is upwards, F required is less when the rotation is counter-clockwise assuming that the brake is effective.
Thus, for the given arrangement of the differential brake, it is more effective when
(a) $a > b$, F downwards, rotation clockwise
(b) $a > b$, F upwards, rotation counter-clockwise
- The advantage of self-locking is taken in hoists and conveyers where motion is permissible in only one direction. If the motion gets reversed somehow, the self-locking is engaged which can be released only by reversing the applied force.
- It is seen in (v) that a differential band brake is more effective only in one direction of rotation of the drum. However, a two-way band brake can also be designed which is equally effective for both the directions of rotation of the drum (Fig. 15.11). In such a brake, the two lever arms are made equal.

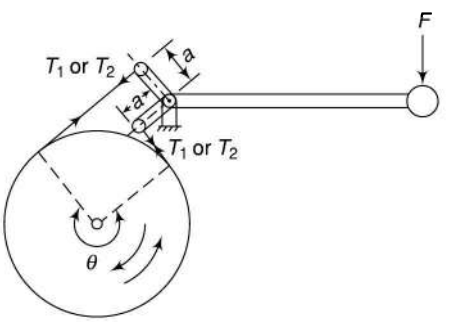

Fig. 15.11

For both directions of rotation of the drum,

$$Fl - T_1 a - T_2 a = 0$$

or

$$F = (T_1 + T_2)\frac{a}{l} \tag{15.7}$$

Example 15.7 *A differential band brake has a drum with a diameter of 800 mm. The two ends of the band are fixed to the pins on the opposite sides of the fulcrum of the lever at distances of 40 mm and 200 mm from the fulcrum. The angle of contact is 270° and the coefficient of friction is 0.2. Determine the brake torque when a force of 600 N is applied to the lever at a distance of 800 mm from the fulcrum.*

Solution $F = 600$ N, $l = 800$ mm, $r = 400$ mm, $\theta = 270°$ and $\mu = 0.2$

- Assuming $a = 200$ mm and $b = 40$ mm, i.e., $a > b$, F must act downwards to apply the brake (Fig. 15.7).

$$\frac{T_1}{T_2} = e^{\mu\theta} = e^{0.2\times270\times\frac{\pi}{180}} = 2.57$$

Counter-clockwise rotation of the drum

Taking moments about the fulcrum,

$Fl - T_1 a + T_2 b = 0$

$600 \times 800 - 2.57\, T_2 \times 200 + T_2 \times 40 = 0$

or $T_2 = 1012.7$ N and

$T_1 = 1012.7 \times 2.57 = 2602.5$ N

Braking torque, $T_B = (2602.5 - 1012.7) \times 0.4$

$= 636$ N.m

Clockwise rotation of the drum

Taking moments about the fulcrum O,

$Fl + T_1 b - T_2 a = 0$ (Fig. 15.8)

$600 \times 800 + 2.57\, T_2 \times 40 - T_2 \times 200 = 0$

or $600 \times 800 = T_2\,(200 - 2.57 \times 40)$

or $T_2 = 4938$ N and $T_1 = 4938 \times 2.57 = 12\,691$ N

$T_B = (T_1 - T_2)\, r = (12\,691 - 4938) \times 0.4$

$= 3101$ N.m

- Assuming $a = 40$ mm and $b = 200$ mm, i.e., $a < b$, F must act upwards to apply the brake.

Counter-clockwise rotation of the drum

$600 \times 800 + 2.57\, T_2 \times 40 - T_2 \times 200 = 0$ (Fig. 15.9a)

or $600 \times 800 = T_2\,(200 - 2.57 \times 40)$

or $T_2 = 4938$ N and $T_1 = 4938 \times 2.57 = 12\,691$ N

Braking torque, $T_B = (T_1 - T_2)\, r$

$= (12\,691 - 4938) \times 0.4 = 3101$ N.m

Clockwise rotation of the drum

$600 \times 800 + T_2 \times 40 - 2.57\, T_2 \times 200 = 0$ (Fig. 15.9b)

or $T_2 = 1012.7$ N

and $T_1 = 1012.7 \times 2.57 = 2602.5$ N

$T_B = (2602.5 - 1012.7) \times 0.4 = \underline{636 \text{ N.m}}$

The above results show that the effectiveness of the brake in one direction of rotation is equal to the effectiveness in the other direction if the distances of the pins on the opposite sides of the fulcrum are changed and the force is applied in the proper direction so that the band is tightened.

Example 15.8 *A simple band brake (Fig. 15.12) is applied to a shaft carrying a flywheel of 250-kg mass and of radius of gyration of 300 mm. The shaft speed is 200 rpm. The drum diameter is 200 mm and the coefficient of friction is 0.25. Determine the*

(i) brake torque when a force of 120 N is applied at the lever end

(ii) number of turns of the flywheel before it comes to rest

(iii) time taken by the flywheel to come to rest

Solution

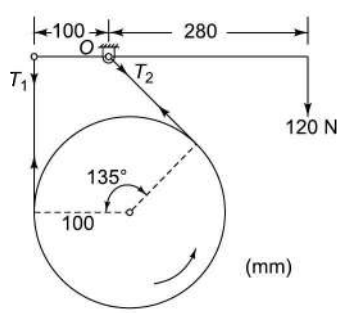

Fig. 15.12

$m = 250$ kg $\quad \mu = 0.25$
$k = 300$ mm $\quad r = 100$ mm
$N = 200$ rpm $\quad a = 100$ mm
$\beta = 135°$ $\quad l = 280$ mm

(i) $\theta = 360° - 135° = 225°$

or $\quad \theta = 225 \times \dfrac{\pi}{180} = 3.93$ rad

$$\frac{T_1}{T_2} = e^{\mu\theta} = e^{0.25\times3.93} = 2.67$$

Taking moments about O,

$$F \times l - T_1 \times a = 0$$
$$120 \times 280 - T_1 \times 100 = 0$$
$$T_1 = 336 \text{ N}$$
$$T_2 = \frac{336}{2.67} = 125.8 \text{ N}$$
$$T_B = (336 - 125.8) \times 0.1 = \underline{21 \text{ N.m}}$$

(ii) KE of the flywheel

$$= \frac{1}{2} I\omega^2 = \frac{1}{2} mk^2 \left(\frac{2\pi N}{60}\right)^2$$
$$= \frac{1}{2} \times 250 \times (0.3)^2 \times \left(\frac{2\pi \times 200}{60}\right)^2$$
$$= 4935 \text{ N.m}$$

Let the KE be used to overcome the work done by the braking torque in n revolutions. Then

$T_B \times$ Angular displacement $= KE$ of flywheel
$21 \times 2\pi n = 4935$
$n = 37.4$ revolutions

(iii) For uniform retardation, average speed $= 200/2 = 100$ rpm

$$\text{Time taken} = \frac{n}{N} = \frac{37.4}{100} \text{ min.}$$
$$= \frac{37.4}{100/60} = \underline{22.44 \text{ s}}.$$

Example 15.9 *A simple band brake is applied to a drum of 560-mm diameter which rotates at 240 rpm. The angle of contact of the band is 270°. One end of the band is fastened to a fixed pin and the other end to the brake lever, 140 mm from the fixed pin. The brake lever is 800 mm long and is placed perpendicular to the diameter that bisects the angle of contact. Assuming the coefficient of friction as 0.3, determine the necessary pull at the end of the lever to stop the drum if 40 kW of power is being absorbed. Also, find the width of the band if its thickness is 3 mm and the maximum tensile stress is limited to 40 N/mm².*

Solution The brake is shown in Fig. 15.13.

$N = 240$ rpm, $d = 560$ mm, $r = 280$ mm, $\theta = 270°$, $a = 140$ mm, $l = 800$ mm, $\mu = 0.3$, $P = 40$ kW, $t = 3$ mm, $\sigma = 40$ N/mm².

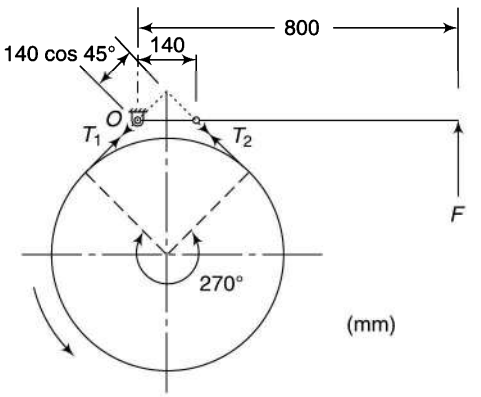

Fig. 15.13

It can be observed from the figure that to tighten the band, the force is to be applied upwards. If the drum rotates counter-clockwise, the tight and slack sides will be as shown.

$$\omega = \frac{2\pi N}{60} = \frac{2\pi \times 240}{60} = 8\pi$$

$$\text{Angle of lap, } \theta = 270 \times \frac{\pi}{180} = 1.5\pi \text{ rad}$$

$$\frac{T_1}{T_2} = e^{\mu\theta} = e^{0.3\times1.5\pi} = 4.11$$

Also, $P = T_B . \omega$

$$= [(T_1 - T_2)r] . \omega$$

or $\quad 40\,000 = (T_1 - T_2) \times 0.28 \times 8\pi$

$$(T_1 - T_2) = 5684$$

or $\quad 4.11\, T_2 - T_2 = 5684$

$T_2 = 1828$ N

$T_1 = 1828 \times 4.11 = 7514$ N

Take moments of the forces on the lever about the fulcrum O,

$F \times 800 = 1828 \times 140 \cos 45°$

$F = \underline{226.2 \text{ N}}$

Let b be the width of the band.

Maximum tension, $T_1 = \sigma . b . t$

or $7514 = 40 \times b \times 3$

or $b = \underline{62.6 \text{ mm}}$

Observe that if the drum rotates clockwise, the brake is less effective as in that case tight and slack sides are interchanged and the force required to apply the same brake torque is more which is

$F \times 800 = 7515 \times 140 \cos 45°$

$F = 930 \text{ N}$

Example 15.10 *A crane is required to support a load of 1.2 tonnes on the rope round its barrel of 400 mm diameter (Fig.15.14). The brake drum which is keyed to the same shaft as the barrel has a diameter of 600 mm. The angle of contact of the band brake is 275° and the coefficient of friction is 0.22. Determine the force required at the end of the lever to support the load. Take a = 150 mm and l = 750 mm.*

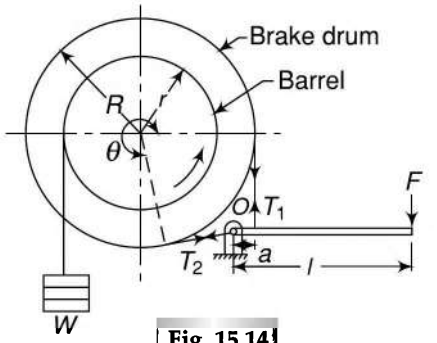

Fig. 15.14

Solution

$W = (1.2 \times 1000 \times 9.81)$ N

$R = 300$ mm

$r = 200$ mm

$\mu = 0.22$

$\theta = 275°$

$$\frac{T_1}{T_2} = e^{\mu\theta} = e^{0.22 \times 275 \times \frac{\pi}{180}}$$

$= 2.87$

For equilibrium,

$(T_1 - T_2) R = W \times r$

or $(2.87\, T_2 - T_2) \times 300 = (1.2 \times 1000 \times 9.81) \times 200$

$T_2 = 4197$ N.m

$T_1 = 4197 \times 2.87 = \underline{12\,045 \text{ N.m}}$

Taking moments about O,

$F \times l - T_1 \times a = 0$

or $F \times 750 - 12\,045 \times 150 = 0$

or $F = \underline{2407 \text{ N}}$

15.4 BAND AND BLOCK BRAKE

A band and block brake consists of a number of wooden blocks secured inside a flexible steel band. When the brake is applied, the blocks are pressed against the drum. Two sides of the band become tight and slack as usual. Wooden blocks have a higher coefficient of friction, Thus, increasing the effectiveness of the brake. Also, such blocks can be easily replaced on being worn out [Fig.15.15(a)].

Each block subtends a small angle of 2θ at the centre of the drum. The frictional force on the blocks acts in the direction of rotation of the drum. For n blocks on the brake,

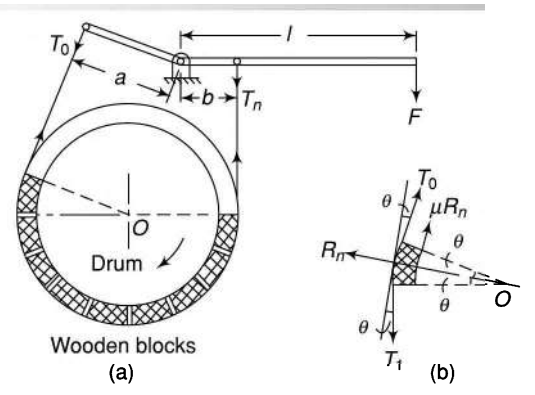

Fig. 15.15

Let T_0 = tension on the slack side
T_1 = tension on the tight side after one block
T_2 = tension on the tight side after two blocks
.....
.....
T_n = tension on the tight side after n blocks
μ = coefficient of friction
R_n = normal reaction on the block

The forces on one block of the brake are shown in Fig.15.15(b).

For equilibrium,

$$(T_1 - T_0)\cos\theta = \mu R_n$$

$$(T_1 + T_0)\sin\theta = R_n$$

or
$$\frac{T_1 - T_0}{T_1 + T_0}\frac{1}{\tan\theta} = \mu$$

or
$$\frac{T_1 - T_0}{T_1 + T_0} = \frac{\mu\tan\theta}{1}$$

or
$$\frac{(T_1 - T_0) + (T_1 + T_0)}{(T_1 - T_0) - (T_1 + T_0)} = \frac{\mu\tan\theta + 1}{\mu\tan\theta - 1}$$

$$-\frac{2T_1}{2T_0} = -\frac{1 + \mu\tan\theta}{1 - \mu\tan\theta}$$

$$\frac{T_1}{T_0} = \frac{1 + \mu\tan\theta}{1 - \mu\tan\theta}$$

Similarly,
$$\frac{T_2}{T_1} = \frac{1 + \mu\tan\theta}{1 - \mu\tan\theta}, \text{ and so on.}$$

.....
.....

and
$$\frac{T_n}{T_n - 1} = \frac{1 + \mu\tan\theta}{1 - \mu\tan\theta}$$

$$\frac{T_n}{T_0} = \frac{T_n}{T_{n-1}}\frac{T_{n-1}}{T_{n-2}}\cdots\frac{T_2}{T_1}\frac{T_1}{T_0}$$

$$= \left(\frac{1 + \mu\tan\theta}{1 - \mu\tan\theta}\right)^n \tag{15.8}$$

Example 15.11 *A band and block brake has 14 blocks. Each block subtends an angle of 14° at the centre of the rotating drum. The diameter of the drum is 750 mm and the thickness of the blocks is 65 mm. The two ends of the band are fixed to the pins on the lever at distances of 50 mm and 210 mm from the fulcrum on the opposite sides. Determine the least force required to be applied at the lever*

at a distance of 600 mm from the fulcrum if the power absorbed by the blocks is 180 kW at 175 rpm. Coefficient of friction between the blocks and the drum is 0.35.

Solution

$N = 175$ rpm, $d = 750$ mm, $\theta = 7°$, $\mu = 0.35$, $P = 180$ kW, $t = 65$ mm, $l = 600$ mm

Refer Fig. 15.15.

$$P = (T_{14} - T_0).v = (T_{14} - T_0).\frac{\pi DN}{60}$$

$$\therefore 180\,000 = (T_{14} - T_0) \times \frac{\pi \times (0.75 + 2 \times 0.065) \times 175}{60}$$

or $T_{14} - T_0 = 22\,323$ N

$$\frac{T_{14}}{T_0} = \left(\frac{1 + \mu \tan\theta}{1 - \mu \tan\theta}\right)^n = \left(\frac{1 + 0.35 \tan 7°}{1 - 0.35 \tan 7°}\right)^{14} = 3.334$$

or $2.334\, T_0 = 22\,323$ or $T_0 = 9564$ N

and $T_{14} = 22\,323 + 9564 = 31\,887$ N

Assume $a = 210$ mm and $b = 50$ mm (Fig. 15.15)

As $a > b$, F must be downwards and rotation clockwise for maximum braking torque. Taking moments about the fulcrum,

$F \times l - T_0\, a + T_{12}\, b = 0$

$F \times 600 - 9564 \times 210 + 31887 \times 50 = 0$

$600\, F = 414\,090$ or $F = 690$ N

Example 15.12 *A band and block brake having 12 blocks, each of which subtends an angle of 16° at the centre, is applied to a rotating drum with a diameter of 600 mm. The blocks are 75 mm thick. The drum and the flywheel mounted on the same shaft have a mass of 1800 kg and have a combined radius of gyration of 600 mm. The two ends of the band are attached to pins on the opposite sides of the brake fulcrum at distances of 40 mm and 150 mm from it. If a force of 250 N is applied on the lever at a distance of 900 mm from the fulcrum, find the*

(i) maximum braking torque

(ii) angular retardation of the drum

(iii) time taken by the system to be stationary from the rated speed of 300 rpm.

Take coefficient of friction between the blocks and the drum as 0.3.

Solution

$F = 250$ N, $d = 600$ mm, $\theta = 8°$, $t = 75$ mm, $l = 900$ mm, $k = 600$ mm, $m = 1800$ kg, $n = 12$, $N = 300$ rpm, $\mu = 0.3$

Refer Fig. 15.15.

(i) $$\frac{T_{12}}{T_0} = \left(\frac{1 + \mu \tan\theta}{1 - \mu \tan\theta}\right)^n$$

$$= \left(\frac{1 + 0.3 \tan 8°}{1 - 0.3 \tan 8°}\right)^{12} = 2.752$$

Assume $a = 150$ mm and $b = 40$ mm

As $a > b$, F must be downwards and the rotation is clockwise for maximum braking torque. Taking moments about the fulcrum,

$F \times l - T_0\, a + T_{12}\, b = 0$

$250 \times 900 - T_0 \times 150 + 2.752\, T_0 \times 40 = 0$

$T_0\,(150 - 2.752 \times 40) = 250 \times 900$

$T_0 = 5636$ N

$T_{12} = 5636 \times 2.752 = 15\,511$ N

Maximum braking torque, $T_B = (T_{12} - T_0) \times \dfrac{d}{2}$

$$= (15\,511 - 5636) \times \left(\frac{0.6 + 0.075 \times 2}{2}\right)$$

$= \underline{3703 \text{ N.m}}$

(ii) $T_B = I\alpha = mk^2\alpha$

$3703 = 1800 \times (0.6)^2 \times \alpha$

$\alpha = \underline{5.71 \text{ rad/s}^2}$

(iii) Initial angular speed,

$$\omega_0 = \frac{2\pi \times 300}{60} = 31.4 \text{ rad/s}$$

Final angular speed, $\omega = 0$

$\therefore$ $\omega = \omega_0 - \alpha t$ (α negative due to retardation)

or $0 = 31.4 - 5.71\, t$

$t = \underline{5.5 \text{ s}}$

15.5 INTERNAL EXPANDING SHOE BRAKE

Earlier, automobiles used band brakes which were exposed to dirt and water. Their heat dissipation capacity was also poor. These days, band brakes have been replaced by internal expanding shoe brakes having at least one self-energising shoe per wheel. This results in tremendous friction, giving great braking power without excessive use of pedal pressure.

Figure 15.16 shows an internal shoe automobile brake. It consists of two semi-circular shoes which are lined with a friction material such as *ferodo*. The shoes press against the inner flange of the drum when the brakes are applied. Under normal running of the vehicle, the drum rotates freely as the outer diameter of the shoes is a little less than the internal diameter of the drum.

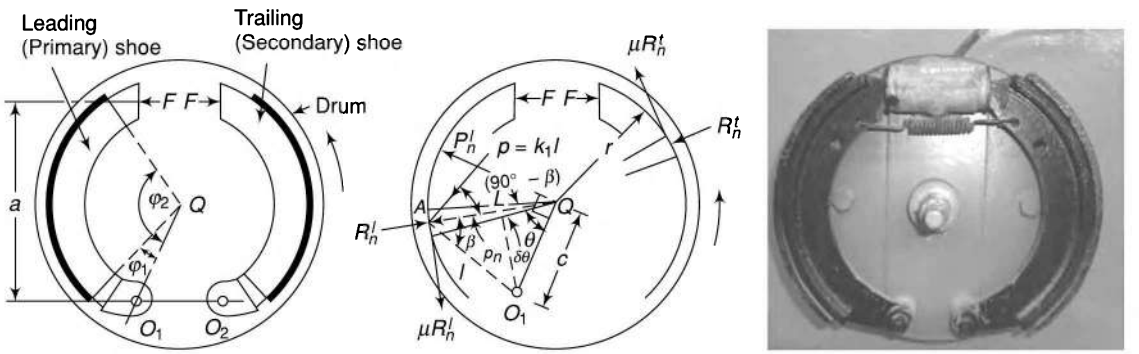

Fig. 15.16

Internal expanding shoe brake mechanism (without brake drum).

The actuating force F is usually applied by two equal-diameter pistons in a common hydraulic cylinder and is applied equally in magnitude to each shoe. For the shown direction of the drum rotation, the left shoe is known as the *leading* or *forward shoe* and the right as the *trailing* or *rear shoe.*

Assuming that each shoe is rigid as compared to the friction surface, the pressure p at any point A on the contact surface of the shoe will be proportional to its distance l from the pivot.

Considering the leading shoe,

$p \propto l = k_1\, l$ where k_1 is a constant.

The direction of p is perpendicular to OA.

The normal pressure, $p_n = k_1 l \cos(90° - \beta) = k_1 l \sin\beta$

$= k_1 c \sin\theta$ $\qquad (O_1 L = l \sin\beta = c \sin\theta)$

$= k_2 \sin\theta$ $\qquad$ where k_2 is another constant

p_n is maximum when $\theta = 90°$

Let P^l_n = maximum intensity of normal pressure on the leading shoe.

$$p_{n\,\max} = P^l_n = k_2 \sin 90° = k_2$$

or

$$p_n = P^l_n \sin\theta \tag{15.9}$$

Let w = width of brake lining

μ = coefficient of friction

Consider a small element of brake lining on the leading shoe that makes an angle $\delta\theta$ at the centre.

Normal reaction on the differential surface,

$$R^l_n = \text{Area} \times \text{Pressure}$$

$$= (r\ \delta\theta\ w)\ p_n$$
$$= r\ \delta\theta\ w\ P^l_n \sin\theta$$

Taking moments about the fulcrum O_1,

$$Fa - \sum_{\varphi 1}^{\varphi 2} R^l_n c \sin\theta + \sum_{\varphi 1}^{\varphi 2} \mu R^l_n (r - c\cos\theta) = 0 \tag{15.10}$$

where

$$\sum_{\varphi 1}^{\varphi 2} R^l_n c \sin\theta = \int_{\varphi 1}^{\varphi 2} rcwP^l_n \sin^2\theta\, d\theta$$
$$= \int_{\varphi 1}^{\varphi 2} rcwP^l_n \frac{1}{2}(1 - \cos 2\theta)\, d\theta$$
$$= rcwP^l_n \frac{1}{2}\left(\theta - \frac{\sin 2\theta}{2}\right)_{\varphi 1}^{\varphi 2}$$
$$= \frac{rcwP^l_n}{4}(2\varphi_2 - 2\varphi_1 - \sin 2\varphi_2 + \sin 2\varphi_1)$$

and

$$\sum_{\varphi 1}^{\varphi 2} \mu R^l_n (r - c\cos\theta) = \int_{\varphi 1}^{\varphi 2} \mu r^2 wP^l_n \sin\theta\, d\theta - \int_{\varphi 1}^{\varphi 2} \mu rcwP^l_n \sin\theta\cos\theta\, d\theta$$
$$= \mu r^2 wP^l_n (-\cos\theta)_{\varphi 1}^{\varphi 2} - \int_{\varphi 1}^{\varphi 2} \mu rcwP^l_n \frac{1}{2}\sin 2\theta\, d\theta$$
$$= \mu r^2 wP^l_n (\cos\varphi_1 - \cos\varphi_2) - \mu rcwP^l_n \frac{1}{2}\left(\frac{-\cos 2\theta}{2}\right)_{\varphi 1}^{\varphi 2}$$
$$= \frac{\mu rwP^l_n}{4}[4r(\cos\varphi_1 - \cos\varphi_2) - c(\cos 2\varphi_1 - \cos 2\varphi_2)]$$

Taking moments about the fulcrum O_2 for the trailing shoe,

$$Fa - \sum_{\varphi 1}^{\varphi 2} R^t_n c \sin\theta - \sum_{\varphi 1}^{\varphi 2} \mu R^t_n (r - c\cos\theta) = 0$$

where
$$\sum_{\varphi_1}^{\varphi_2} R^t_n c \sin\theta = \frac{rcwP^t_n}{4}[2\varphi_2 - 2\varphi_1 - \sin 2\varphi_2 + \sin 2\varphi_1]$$

and

$$\sum_{\varphi_1}^{\varphi_2} \mu R^t_n (r - c\cos\theta) = \frac{\mu rwP^t_n}{4}[4r(\cos\varphi_1 - \cos\varphi_2) - c(\cos 2\varphi_1 - \cos 2\varphi_2)]$$

Thus P^l_n and P^t_n, the maximum pressure intensities on the leading and the trailing shoes, can be determined.

Braking torque,
$$T_B = \sum_{\varphi_1}^{\varphi_2} \mu R^l_n r + \sum_{\varphi_1}^{\varphi_2} \mu R^t_n r$$
$$= \int_{\varphi_1}^{\varphi_2} \mu r^2 wP^l_n \sin\theta\, d\theta + \int_{\varphi_1}^{\varphi_2} \mu r^2 wP^t_n \sin\theta\, d\theta$$

$$= r^2 \mu w (P_n^l + P_n^t)(-\cos\varphi)_{\varphi_1}^{\varphi_2}$$

$$= r^2 \mu w (P_n^l + P_n^t)(\cos\varphi_1 - \cos\varphi_2) \tag{15.11}$$

Note that for the same applied force F on each shoe, $P^l{}_n$ is not equal to $P^t{}_n$ and $P^l{}_n > P^t{}_n$. Usually, more than 50% of the total braking torque is supplied by the leading shoe.

Also note that the leading shoe is self-energizing whereas the trailing shoe is not. This is because the friction forces acting on the leading shoe help the applied force F, and that on the trailing shoe oppose it. On reversing the direction of drum rotation, the right shoe will become self-energizing whereas the left will not be so any longer.

In Eq. 15.10, if the third term exceeds the second term on the LHS, F will be negative and the brake becomes self-locking. A brake should be self-energizing but not self-locking. The amount of self-energizing is measured by the ratio of the friction moment and the normal reaction moment, i.e., the ratio of the third term to the second term. When this ratio is equal to or more than unity, the brake is self-locking. When the ratio is less than unity (more than zero), the brake is self-energizing.

Example 15.13 *The following data refer to an internal expanding shoe brake shown in Fig. 15.16:*

Force F on each shoe	*= 180 N*
Coefficient of friction, μ	*= 0.3*
Internal radius of the brake drum, r	*= 150 mm*
Width of the brake lining, w	*= 40 mm*
Distance: a = 200 mm	*c = 120 mm*
Angles: φ_1 = 30°	*φ_2 = 135°*

Determine the bracking torque applied when the drum rotates (i) counter-clockwise, and (ii) clockwise.

Solution

(i) Rotation counter-clockwise

For the leading shoe

$$Fa - \int_{\varphi_1}^{\varphi_2} R_n^l c \sin\theta + \int_{\varphi_1}^{\varphi_2} \mu R_n^l (r - c\cos\theta) = 0$$

$$180 \times 0.2 - \frac{0.15 \times 0.12 \times 0.04 \times P_n^l}{4}$$

$$\left(2 \times 135 \times \frac{\pi}{180} - 2 \times 30 \times \frac{\pi}{180} - \sin 270° + \sin 60°\right)$$

$$+ \frac{0.3 \times 0.15 \times 0.04 \times P_n^l}{4}$$

$$\begin{bmatrix} 4 \times 0.15(\cos 30° - \cos 135°) \\ -0.12(\cos 60° - \cos 270°) \end{bmatrix} = 0$$

$$36 - 0.000\,996 P_n^l + 0.000\,398 P_n^l = 0$$

$$P_n^l = 60\,201 \text{ N/m}^2$$

For the trailing shoe

$$36 - 0.000\,996 P_n^t - 0.000\,398 P_n^t = 0$$

$$P_n^t = 25\,825 \text{ N/m}^2$$

Braking torque,

$$T_B = r^2 \mu w (P_n^l + P_n^t)(\cos\varphi_1 - \cos\varphi_2)$$

$$= (0.15)^2 \times 0.3 \times 0.04\ (60\,201 + 25\,825)(\cos 30° - \cos 135°)$$

$$= \underline{36.54 \text{ N.m}}$$

(ii) Rotation clockwise

When the rotation is reversed, $P^l{}_n$ and $P^l{}_n$ are interchanged and Thus, the braking torque is the same.

15.6 EFFECT OF BRAKING

Consider a vehicle moving up an inclined plane (Fig. 15.17).

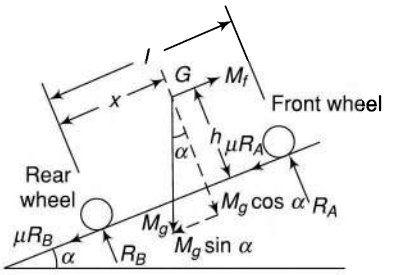

Fig. 15.17

Brakes applied to rear wheels only

Let M = mass of vehicle

α = angle of inclination of the plane with horizontal

R_A, R_B = reactions of the ground on the front and rear wheels respectively

f = retardation of the vehicle

l = wheel base of the car

h = height of centre of mass of the vehicle from the inclined surface

x = distance of the centre of mass from the rear axle

μ = coefficient of friction between the ground and the tyres

For equilibrium,

$$R_A + R_B = Mg \cos \alpha \tag{i}$$

$$\mu R_B + Mg \sin \alpha = Mf \tag{ii}$$

where f is the retardation of the vehicle.

Taking moments about G, the centre of mass of the vehicle,

$$R_B x + \mu R_B \times h - R_A (l - x) = 0 \tag{iii}$$

From (i),

$$R_A = Mg \cos \alpha - R_B$$

∴ (iii) becomes,

$$R_B x + \mu R_B \times h - (Mg \cos \alpha - R_B)(l - x) = 0$$

or

$$R_B (x + \mu h + l - x) = Mg \cos \alpha (l - x)$$

or

$$R_B = \frac{Mg \cos \alpha (l - x)}{l + \mu h}$$

and thus (ii) becomes,

$$\mu \frac{Mg \cos \alpha (l - x)}{l + \mu h} + Mg \sin \alpha = Mf$$

or

$$f = g \cos \alpha \left[\frac{\mu (l - x)}{l + \mu h} + \tan \alpha \right] \tag{15.12}$$

On a level road, $\alpha = 0$, and so

$$f = g \frac{\mu (l - x)}{l + \mu h} \tag{15.13}$$

When the vehicle moves down a plane,

$$f = g \cos \alpha \left[\frac{\mu (l - x)}{l + \mu h} - \tan \alpha \right] \tag{15.14}$$

Brakes applied to front wheels only

$$R_A + R_B = Mg \cos \alpha \quad \text{(iv)}$$

$$\mu R_A + Mg \sin \alpha = Mf \quad \text{(v)}$$

Taking moments about G,

$$R_B x + \mu R_A \times h - R_A (l - x) \quad \text{(vi)}$$

From (iv) and (vi),

$$(Mg \cos \alpha - R_A) x + \mu R_A \times h - R_A (l - x) = 0$$

or

$$Mg x \cos \alpha = R_a (x - \mu h + l - x)$$

$$R_A = \frac{Mgx \cos \alpha}{l - \mu h}$$

Therefore (v) becomes, $\mu = \dfrac{Mgx \cos \alpha}{l - \mu h} + Mg \sin \alpha = Mf$

or

$$f = g \cos \alpha \left[\frac{\mu x}{l - \mu h} + \tan \alpha \right] \quad (15.15)$$

On a level road, $\alpha = 0$, and therefore

$$f = g \frac{\mu x}{l - \mu h} \quad (15.16)$$

On a down plane,

$$f = g \cos \alpha \left(\frac{\mu x}{l - \mu h} - \tan \alpha \right) \quad (15.17)$$

Brakes applied to all four wheels

$$R_A + R_B = Mg \cos \alpha \quad \text{(vii)}$$

$$\mu R_A + \mu R_B + Mg \sin \alpha = Mf \quad \text{(viii)}$$

or $\mu (R_A + R_B) + Mg \sin \alpha = Mf$

or $\mu Mg \cos \alpha + Mg \sin \alpha = Mf$

or $f = g \cos \alpha (\mu + \tan \alpha)$ (15.18)

On a level road, $\alpha = 0$. Therefore

$$f = g \mu \quad (15.19)$$

On a down plane,

$$f = g \cos \alpha (\mu - \tan \alpha) \quad (15.20)$$

Example 15.14 *A vehicle having a wheel base of 3.2 m has its centre of mass at 1.4 m from the rear wheels and 55 mm from the ground level. It moves on a level ground at a speed of 54 km/h. Determine the distance moved by the car before coming to rest on applying the brakes to the*

(i) rear wheels
(ii) front wheels
(iii) all the four wheels

The coefficient of friction between the tyres and the road is 0.5.

Solution Let s be the distance moved by the car before coming to rest.

$$u = 54 \text{ km/h} = \frac{54\ 000}{3600} = 15 \text{ m/s}$$

(i) Brakes applied to rear wheels

$$f = g\frac{\mu(l-x)}{l+\mu h} = 9.81 \times \frac{0.5(3.2-1.4)}{3.2+0.5\times 0.55}$$

$$= 2.54 \text{ m/s}^2$$

If retardation is uniform, $v^2 - u^2 = -2fs$

$0 - u^2 = -2fs$

$$s = \frac{u^2}{2f} = \frac{15^2}{2\times 2.54} = \underline{44.3 \text{ m}}$$

(ii) Brakes applied to front wheels

$$f = g\frac{\mu x}{l-\mu h} = 9.81 \times \frac{0.5\times 1.4}{3.2-0.5\times 0.55}$$

$$= 2.35 \text{ m/s}^2$$

$$s = \frac{u^2}{2f} = \frac{15^2}{2\times 2.35} = 47.9 \text{ m}$$

(iii) Brakes applied to all the four wheels

$f = gu = 9.81 \times 0.5 = 4.905 \text{ m/s}^2$

$$s = \frac{u^2}{2fs} = \frac{15^2}{2\times 4.90} = \underline{22.9 \text{ m}}$$

Example 15.15 *A vehicle moves on a road that has a slope of 15°. The wheel base is 1.6 m and the centre of mass is at 0.72 m from the rear wheels and 0.8 m above the inclined plane. The speed of the vehicle is 45 km/h. The brakes are applied to all the four wheels and the coefficient of friction is 0.4. Determine the distance moved by the vehicle before coming to rest and the time taken to do so if it moves*

(i) up the plane

(ii) down the plane

Solution Let s be the distance moved by the car before coming to rest.

$$u = 45 \text{ km/h} = \frac{45\ 000}{3600} = 12.5 \text{ m/s}$$

(i) The vehicle moves up

$f = g\cos\alpha\,(\mu + \tan\alpha)$

$= 9.81 \times \cos 15°\,(0.4 + \tan 15°) = 6.33 \text{ m/s}^2$

If retardation is uniform, $v^2 - u^2 = -2fs$

$0 - u^2 = -2fs$

$$s = \frac{u^2}{2f} = \frac{12.5^2}{2\times 6.33} = \underline{12.34 \text{ m}}$$

Also, $v = u - ft$

or $0 = 12.5 - 6.33 \times t$

or $t = 1.97$ s

(ii) The vehicle moves down

$f = g\cos\alpha\,(\mu - \tan\alpha)$

$= 9.81 \times \cos 15°\,(0.4 - \tan 15°) = 1.25 \text{ m/s}^2$

$$s = \frac{u^2}{2f} = \frac{12.5^2}{2\times 1.25} = \underline{62.5 \text{ m}}$$

Also, $0 = 12.5 - 1.25 \times t$

or $t = \underline{10 \text{ s}}$

15.7 TYPES OF DYNAMOMETERS

There are mainly two types of dynamometers:

(i) ***Absorption Dynamometers*** In this type, the work done is converted into heat by friction while being measured. They can be used for the measurement of moderate powers only. Examples are prony brake dynamometer and rope brake dynamometer.

(ii) ***Transmission Dynamometers*** In this type, the work is not absorbed in the process, but is utilised after the measurement. Examples are the belt-transmission dynamometer and the torsion dynamometer.

15.8 PRONY BRAKE DYNAMOMETER

A prony brake dynamometer consists of two wooden blocks clamped together on a revolving pulley carrying a lever (Fig. 15.18). The friction between the blocks and the pulley tends to rotate the blocks in the direction of rotation of the shaft. However, the weight due to suspended mass at the end of the lever prevents this tendency. The grip of the blocks over the pulley is adjusted using the bolts of the clamp until the engine runs at the required speed. The mass added to the scale pan is such that the arm remains horizontal in the equilibrium position; the power of the engine is thus absorbed by the friction.

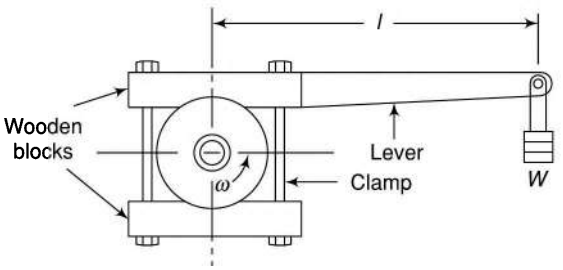

Fig. 15.18

Frictional torque = $Wl = Mgl$

Power of the machine under test = $T\omega = Mgl\dfrac{2\pi N}{60}$

$= MNk$

where k is a constant for a particular brake.

Note that the expression for power is independent of the size of the pulley and the coefficient of friction.

15.9 ROPE BRAKE DYNAMOMETER

In a rope brake dynamometer (Fig. 15.19), a rope is wrapped over the rim of a pulley keyed to the shaft of the engine. The diameter of the rope depends upon the power of the machine. The spacing of the ropes on the pulley is done by 3 to 4 U-shaped wooden blocks which also prevent the rope from slipping off the pulley. The upper end of the rope is attached to a spring balance whereas the lower end supports the weight of suspended mass.

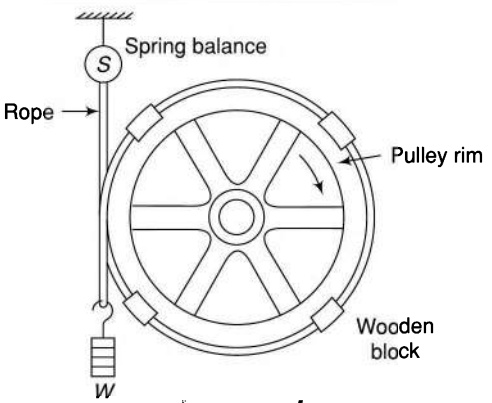

Fig. 15.19

Power of the machine $= T\omega$

$= (F_t \times r)\,\omega$

$= (Mg - s)r\dfrac{2\pi N}{60}$

If the power produced is high, so will be the heat produced due to friction between the rope and the wheel, and a cooling arrangement is necessary. For this, the channel of the flywheel usually has flanges turned inside in which water from a ripe is supplied. An outlet pipe with a flattened end takes the water out.

A rope brake dynamometer is frequently used to test the power of engines. It is easy to manufacture, inexpensive, and requires no lubrication.

If the rope is wrapped several times over the wheel, the tension on the slack side of the rope, i.e., the spring balance reading can be reduced to a negligible value as compared to the tension of the tight side (as $T_1/T_2 = e^{\mu\theta}$ and θ is increased). Thus, one can even do away with the spring balance.

Example 15. 16 *The following data refer to a laboratory experiment with a rope brake:*

Diameter of the flywheel = 800 mm
Diameter of the rope = 8 mm
Dead weight on the brake = 40 kg
Speed of the engine = 150 rpm
Spring balance reading = 100 N
Find the power of the engine.

Solution

$$P = (Mg - s)r\frac{2\pi N}{60}$$

$$= (40 \times 9.81 - 100) \times (0.4 + 0.004)\frac{2\pi \times 150}{60}$$

$$= 1855.6 \text{ W}$$

15.10 BELT TRANSMISSION DYNAMOMETER

The belt transmission dynamometer occupies a prominent position among transmission dynamometers. When a belt transmits power from one pulley to another, there exists a difference in tensions between the tight and slack sides. A dynamometer measures directly the difference in tensions ($T_1 - T_2$) while the belt is running.

Figure 15.20 shows a *Tatham* dynamometer. A continuous belt runs over the driving and the driven pulleys through two intermediate pulleys. The intermediate pulleys have their pins fixed to a lever with its fulcrum at the midpoint of the two pulley centres. As the lever is not pivoted at its midpoint, a mass at the left end is used for its initial equilibrium. When the belt transmits power, the lever tends to rotate in the counter-clockwise direction due to the difference of tensions on the tight and the slack sides. To maintain its horizontal position, a weight of the required amount is provided at the right end of the lever. Two stops, one on each side of the lever arm, are used to limit the motion of the lever.

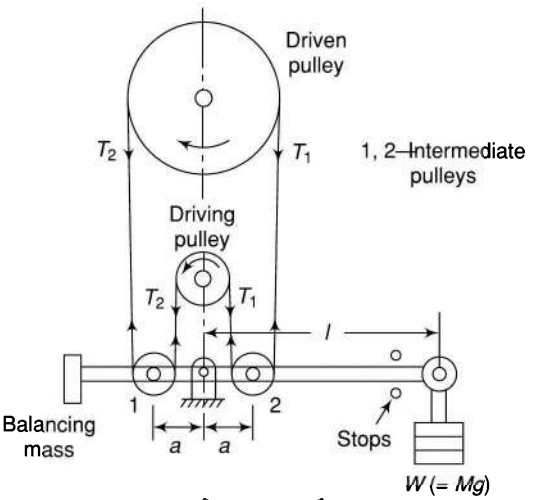

Fig. 15.20

Taking moments about the fulcrum,

$$Mgl - 2T_1a + 2T_2a = 0$$

$$Mgl - 2a(T_1 - T_2) = 0$$

$$T_1 - T_2 = \frac{Mgl}{2a}$$

Power, $P = (T_1 - T_2)v$

where v = belt speed in metres per second.

Example 15.17 *In a belt transmission dynamometer, the driving pulley rotates at 300 rpm. The distance between the centre of the driving pulley and the dead mass is 800 mm. The diameter of each of the driving as well as the intermediate pulleys is equal to 360 mm. Find the value of the dead mass required to maintain the lever in a horizontal position when the power transmitted is 3 kW. Also, find its value when the*

belt just begins to slip on the driving pulley, μ being 0.25 and the maximum tension in the belt 1200 N.

Solution

$N = 300$ rpm $\quad a = 0.36$ m

$l = 0.8$ m $\quad p = 3000$ W

(i) $P = (T_1 - T_2)v = \dfrac{Mgl}{2a} \times \omega r$

$$= \frac{Mgl}{2a} \times \frac{2\pi N}{60} \times r$$

$$3000 = \frac{M \times 9.81 \times 0.8}{2 \times 0.36} \times \frac{2\pi \times 300}{60} \times 0.18$$

$$M = \underline{48.7 \text{ kg}}$$

(ii) $T_1 = 1200$ N, $\quad \mu = 0.25, \theta = \pi$ rad

$$\frac{T_1}{T_2} = e^{\mu\theta} = e^{0.25 \times \pi} = 2.19$$

$$T_2 = \frac{1200}{2.19} = 548\text{N}$$

$$T_1 - T_2 = \frac{Mgl}{2a}$$

$$1200 - 548 = \frac{M \times 9.81 \times 0.8}{2 \times 0.36}$$

$$M = \underline{59.8 \text{ kg}}$$

15.11 EPICYCLIC-TRAIN DYNAMOMETER

An epicyclic-train dynamometer is another transmission type of dynamometer. As shown in Fig. 15.21, it consists of a simple epicyclic train of gears. A spur gear A is the driving wheel which drives an annular driven wheel B through an intermediate pinion C. The intermediate gear C is mounted on a horizontal lever, the weight of which is balanced by a counterweight at the left end when the system is at rest. When the wheel A rotates counter-clockwise, the wheel B as well as the wheel C rotates clockwise. Two tangential forces, each equal to F, act at the ends of the pinion C, one due to the driving force by the wheel A and the other due to reactive force of the driven wheel B. Both forces are equal if friction is ignored. This tends to rotate the lever in the counter-clockwise direction and it no longer remains horizontal. To maintain it in the same position as earlier, a balancing weight W is provided at the right end of the lever. Two stops, one on each side of the lever arm, are used to limit the motion of the lever.

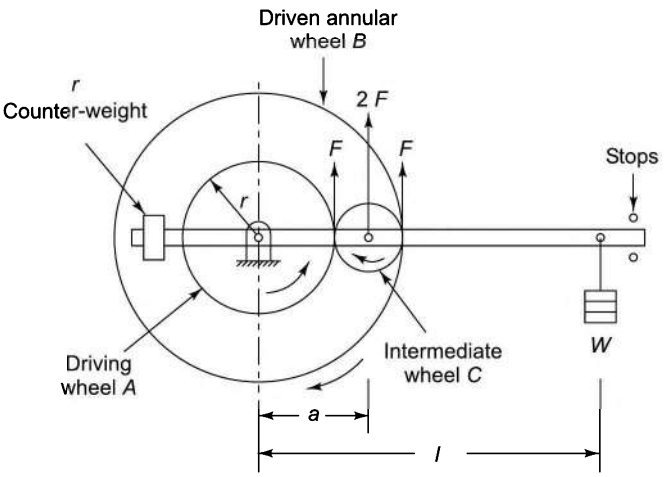

Fig. 15.21

For the equilibrium of the lever,

$$2\,F.a = W.l \quad \text{or} \quad F = \frac{Wl}{2a}$$

and torque transmitted $= F.r$ where r is the radius of the driving wheel

Thus power, $P = T.\omega = F.r.\dfrac{2\pi N}{60}$

15.12 BEVIS–GIBSON TORSION DYNAMOMETER

A Bevis–Gibson torsion dynamometer consists of two discs A and B, a lamp and a movable torque finder arranged as shown in Fig. 15.22(a). The two discs are similar and are fixed to the shaft at a fixed distance from each other. Thus, the two discs revolve with the shaft. The lamp is masked and fixed on the bearing of the shaft. The torque finder has an eyepiece capable of moving circumferentially. Each disc has a small radial slot near its periphery. Similar slots are also made at the same radius on the mask of the lamp and on the torque finder.

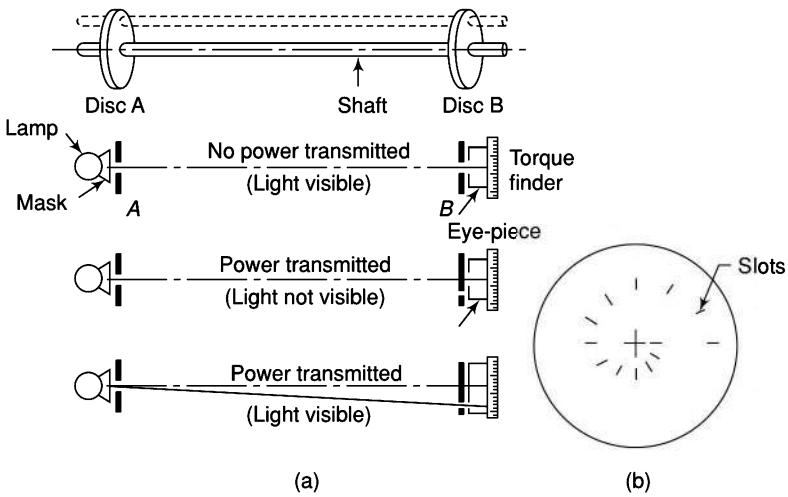

Fig. 15.22

When the shaft rotates freely and does not transmit any torque, all the four slots are in a line and a ray of light from the lamp can be seen through the eyepiece after every revolution. When a torque is transmitted, the shaft twists and the slot in the disc B shifts its position. The ray of light can no longer pass through the four slots. However, if the eyepiece is moved circumferentially by an amount equal to the displacement, the flash will again be visible once in each revolution of the shaft. The eyepiece is moved by a micrometer spindle. The angle of twist may be measured up to one hundredth of a degree.

In case the torque is varied during each revolution of the shaft as in reciprocating engines and it is required to measure the angle of twist at different angular positions, then each disc can be perforated with several slots arranged in the form of a spiral at varying radii [Fig. 15.22(b)]. The lamp and the torque finder have to be moved radially to and from the shaft so that they come opposite each pair of slots in the discs.

15.13 AUTOMOTIVE PROPULSION

The power required for propulsion of a wheeled vehicle depends mainly on the *tractive resistance*, i.e., the resistance faced by the vehicle on the road. The main components of the tractive resistance are the road resistance, aerodynamic resistance and gradient resistance.

1. Road Resistance

Road resistance consists of two types of resistances: rolling resistance and frictional resistance.

Rolling resistance Rolling resistance depends upon the condition of the road surface on which the vehicle is moving. For rail road its value is around 45–50 N per 1000 kg whereas for roads its value may vary from 80 to 250 N. However, for general purposes this can be assumed to be 150 N per 1000 kg. For cord tyres the value is approximately 2/3 of that for fabric tyres.

Frictional resistance Transmission losses like losses in the gear box, bearings, oil churning, etc., are included under frictional resistance. In direct gear, these losses are estimated at 10–12% and in a low gear at 15 to 20%. For private cars these figures may be taken somewhat lower.

2. Aerodynamic Resistance

Aerodynamic resistance is the resistance posed by air or wind and depends upon speed of the vehicle, its shape and the wind velocity. It can be taken as

$$R_a = kAV^2 \tag{15.21}$$

where R_a is the air resistance in N, k is a coefficient of air resistance, A is the projected area of the vehicle in m^2 and V is the vehicle speed in km/h. The usual value of k can be taken as 0.03 for average cars.

3. Gradient Resistance

It is dependent upon the weight of the vehicle and the gradient of the surface and is independent of the vehicle speed. Thus

$$R_g = Mg.\ G_r \tag{15.22}$$

where R_g is the gradient resistance in N, M is the mass of the vehicle in kg and G_r is the surface gradient and indicates the slope.

The sum of the road resistance, aerodynamic resistance and gradient resistance is known as *tractive resistance* (R_t)

Power required or demand power is

$$P = \frac{R_t.V}{\eta \times 1000}\ \text{kW} \tag{15.23}$$

where η is the transmission efficiency (from engine shaft to the wheel axle), R_t is the tractive resistance and V is the velocity in km/h.

Example 15.18 *A car with passengers has a mass of 1200 kg and a frontal area of 1.8 m². It is traveling up a gradient of 1 in 25 at a speed of 75 km/h. The rolling resistance of the car is given by R_r = (0.0112 + 0.00006 V) Mg and the air resistance coefficient is 0.02688. The engine develops 50 kW corresponding to an engine speed of 4500 rpm. The rear axle ratio is 5:1 and the transmission efficiency is 96%. If the wheel radius is 340 mm, determine the*

1. *tractive resistance*
2. *tractive effort available at the wheels and*
3. *acceleration while moving up the gradient*

Solution

$M = 1200$ kg $\quad A = 1.8\ m^2$

$G_r = 1/25 = 0.04 \quad P = 50\ 000$ W

$G = 5 \quad \eta = 0.96$

$r_w = 0.34$ m $\quad V = 75$ km/hr

Tractive resistance,

$$R = (0.0112 + 0.000\ 06\,V)\,Mg + Mg.G_r + 0.026\,88\,AV^2$$
$$= (0.0112 + 0.000\ 06\ V + G_r)\ Mg + 0.026\ 88\ AV^2$$
$$= (0.0112 + 0.000\ 06 \times 75 + 0.04) \times 1200 \times 9.81 + 0.026\ 88.\times 1.8 \times 75^2$$
$$= 655.7 + 272.3$$
$$= 928\ \text{N}$$

$$\text{Brake power available} = T_e.\omega_e = \frac{T_w\omega_w}{\eta}$$

$$50000 = (F_w.r_w).\frac{\omega_e}{G}.\frac{1}{\eta}$$
$$= (F_w.r_w).\frac{2\pi N}{60G}.\frac{1}{\eta}$$
$$= (F_w \times 0.34).\frac{2\pi \times 4500}{60 \times 5}.\frac{1}{0.96}$$

$F_w = 1498$ N

Thus, force available for acceleration

$= 1498 - 928$

$= 570$ N

or $M \times f = 570$

or $1200 \times f = 570$

$f = 0.475$ m/s^2

$= \dfrac{0.475}{1000} \times 3600 = 1.71$ km/h/s

Example 15.19 *The resistance to motion is given by*

$R_t = (0.011 + 0.000\,06\ V)\ Mg + 0.028\ AV^2$

where M is the mass in kg, V is the velocity in km/h and A is the frontal area in m^2.

A jeep of 1400 kg mass and 2.4-m^2 frontal area is used to pull a trailor with a gross mass of 800 kg at 50 km/h in top gear on level road. If the jeep is capable of developing 40 kW of power for propulsion, find whether it is adequate for the job. The transmission efficiency may be taken as 92%. Also, find the pull on the coupling at this speed.

If all the power is used by the loading trailor, determine the pull in the coupling at 50 km/h and the load put on the trailor.

Solution

$M = 1400 + 800 = 2200$ kg $\qquad A = 2.4$ m^2

$P = 40\,000$ W $\qquad \eta = 0.92$

$V = 50$ km/h

$R_t = (0.011 + 0.000\,06\ V)\ Mg + 0.028\ AV^2$

$= (0.011 + 0.000\,06 \times 50) \times 2200 \times 9.81 + 0.028 \times 2.4 \times (50)^2$

$= 302 + 168$

$= 470$ N

$$\text{Brake power available} = \frac{F_w . v_w}{\eta}$$

$$40\,000 = \frac{F_w}{0.92}\left(\frac{50 \times 1000}{3600}\right)$$

$$F_w = 2650 \text{ N}$$

As F_w is quite large as compared to R_t, the jeep is adequate for the job.

Extra pull available $= 2650 - 470 = 2180$ N

The pull in coupling $= (0.011 + 0.00006\ V)\ Mg$ (assuming no wind resistance on the front of trailer)

$= (0.011 + 0.000\,06 \times 50) \times 800 \times 9.81$

$= 110$ N

Total pull at the coupling with extra load $= 2180 + 110 = 2290$ N

With extra load M

$2290 = (0.011 + 0.000\,06 \times 50) \times (800 + M) \times 9.81$

$800 + M = 16674$

$M = 15\,874$ kg

Example 15.20 *A truck is propelled in second gear up a gradient of 12%. The mass of the truck is 4400 kg, the speed is 32 km/h and the frontal area is 6 m^2. The tractive resistance of the truck is given by*

$$R_t = 0.015\ Mg + 0.038AV^2$$

where R_t is the tractive resistance in N, M is the mass in kg, A is the frontal area in m^2 and V is the velocity in km/h. Find the minimum power and the gear ratio in the second gear.

If the engine runs at 2400 rpm, what will be the minimum speed of this vehicle in the top gear on the level road if the efficiency is taken as 92% and the back axle ratio as 4.02? Also find the gear ratio in the top gear.

Solution

$M = 4400$ kg $\qquad A = 6$ m^2

$G_r = 0.12 \qquad \eta = 0.82$ and 0.92

$V = 32$ km/h $\qquad r_w = 0.4$ m

$= \dfrac{32 \times 1000}{3600}$

$= 8.889$ m/s

$$\omega_e = \frac{2\pi \times 2400}{60} = 80\pi$$

In the first case, gradient resistance is also to be considered.

$R_t = 0.015\ Mg + 0.038AV^2 + Mg.G_r$

$= (0.015 + G_r)\ Mg + 0.038\ AV^2$

$= (0.015 + 0.12) \times 4400 \times 9.81 + 0.038 \times 6 \times (32)^2$

$= 5827 + 234$

$= 6061$ N

Now,

$$\text{Brake power, } P = \frac{R_t.v}{\eta} = \frac{6061}{0.82}\left(\frac{32\times1000}{3600}\right)$$

$$= 67\ 700 \text{ W or } 67.7 \text{ kW}$$

$$G = \frac{\omega_e}{\omega_w \times \text{Back axle ratio}}$$

$$= \frac{\omega_e}{(v/r)\times \text{Back axle ratio}}$$

$$= \frac{80\pi}{(8.889/0.4)\times 4.02}$$

$$= 2.81$$

In the top gear on a level road

$$R_t = 0.015\ Mg + 0.038AV^2$$

$$= 0.015 \times 4400 \times 9.81 + 0.038 \times 6 \times V^2$$

$$= 5827 + 234$$

$$= 6061 \text{ N}$$

$$P = \frac{R_t.v}{\eta}$$

$$67\ 700 = \frac{(0.015\times4400\times9.81+0.038\times6\times V^2)V}{0.92}$$

$$647.46V + 0.228V^2 = 224\ 222$$

$$V = 90 \text{ km/h}$$

$$= \frac{90\times1000}{3600}$$

$$= 25 \text{ m/s}$$

$$G = \frac{\omega_e}{\omega_w \times \text{Back axle ratio}}$$

$$= \frac{\omega_e}{(V/r)\times \text{Back axle ratio}}$$

$$= \frac{80\pi\times0.4}{25\times4.02} = 1$$

Summary

1. A brake is an appliance used to apply frictional resistance to a moving body to stop or retard it by absorbing its kinetic energy.
2. The functional difference between a clutch and a brake is that a clutch connects two moving members of a machine whereas a brake connects a moving member to a stationary member.
3. The main types of mechanical brakes are *block* or *shoe brake*, *band brake*, *band and block brake* and *internal expanding shoe brake*.
4. A *block* or *shoe brake* consists of a block or shoe which is pressed against a rotating drum. The force on the drum is increased by using a lever.
5. A *band brake* consists of a rope, belt or flexible steel band (lined with friction material) which is pressed against the external surface of a cylindrical drum when the brake is applied.
6. A *band and block brake* consists of a number of wooden blocks secured inside a flexible steel band which are pressed against the drum when the brake is applied.
7. An *internal expanding shoe brake* consists of two semi-circular shoes which are lined with a friction material such as *ferodo*. The shoes press against the inner flange of the drum when the brakes are applied.
8. The power required for propulsion of a wheeled vehicle depends mainly on the *tractive resistance*, i.e., the resistance faced by the vehicle on the road.
9. The main components of the tractive resistance are the *road resistance*, *aerodynamic resistance* and *gradient resistance*.
10. Road resistance consists of two types of resistances: *rolling resistance* and *frictional resistance*.
11. Aerodynamic resistance is the resistance posed by air or wind and depends upon the speed of the vehicle, its shape and the wind velocity.
12. Gradient resistance depends upon the weight of the vehicle and the gradient of the surface and is independent of the vehicle speed.

Exercises

1. What is a brake? What is the difference between a brake and a clutch?
2. What are various types of brakes? Describe briefly.
3. With the help of a neat sketch explain the working of a block or shoe brake.
4. What is meant by a self-locking and a self-energised brake.
5. Discuss the effectiveness of a band brake under various conditions.
6. Describe the working of a band and block brake

with the help of a neat sketch. Deduce the relation for ratio of tight and slack side tensions.

7. What is the advantage of a self-expanding shoe brake? Derive the relation for the friction torque for such a brake.
8. Discuss the effect of applying the brakes to a vehicle when
   (i) brakes are applied to the rear wheels only
   (ii) brakes are applied to the front wheels only
   (iii) brakes are applied to all the four wheels
9. What is meant by tractive resistance in case of wheeled vehicle? What are its main components?
10. Explain the following in case of a wheeled vehicle:
    (i) Road Resistance
    (ii) Aerodynamic resistance
    (iii) Gradient resistance
11. In a brake shoe applied to a drum Fig. 15.23, the radius of the drum is 80 mm and the coefficient of friction at the brake lining is 0.3. For the counter-clockwise rotation of the drum, determine the braking torque due to a force of 400 N applied at the end of the lever. (21.9 N.m)

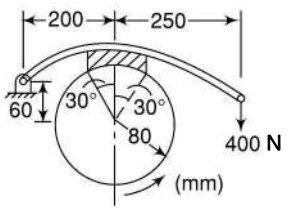

Fig. 15.23

12. Figure 15.24 shows a simple band brake which is applied to a shaft carrying a flywheel of 300-kg mass and of radius of gyration 280 mm. The drum diameter is 220 mm and the shaft speed 240 rpm. The coefficient of friction is 0.3. Find the brake torque when a force of 100 N is applied at the lever end. Also, determine the number of turns of the flywheel and time taken by it before coming to rest. (18.34 N.m, 64.5 rev, 16.13 s)

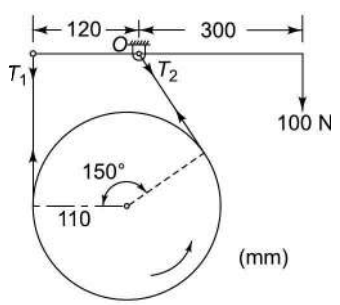

Fig. 15.24

13. For the shoe brake shown Fig. 15.25, the diameter of the brake drum is 400 mm and the angle of contact is 96°. The applied force is 3 kN on each arm and the coefficient of friction between the drum and the lining is 0.35. Determine the maximum torque transmitted by the brake. (1314 N.m)

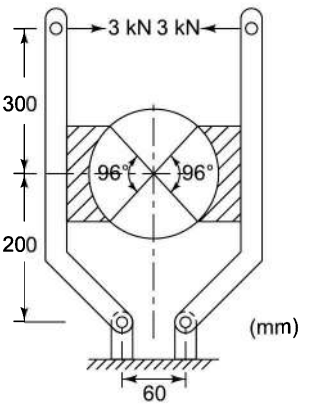

Fig. 15.25

14. A bicycle and rider having a mass of 120 kg and travel at 14 km/h on a level road. A brake is applied to the rear wheel of 900 mm diameter. The pressure on the brake is 110 N and the coefficient of friction is 0.05. What will be the distance covered by the bicycle and number of turns taken by its wheel before coming to rest? (164.9 m, 58.3)
15. Figure 15.26 shows the arrangement of a double block shoe brake. A turn buckle which has right

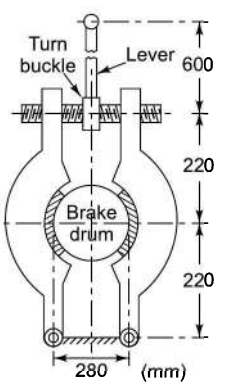

Fig. 15.26

and left-handed threads of six-start with a lead of 45 mm is used to apply the force to each block. The diameter of the turn buckle is 30 mm and it is rotated by a lever. Each block subtends an angle of 90° at the centre of the drum. The coefficient of friction for the brake blocks is 0.4 and for the screw and the nut is 0.15. Find the brake torque applied by a force of 120 N at the end of the lever.

(875.7 N.m)

16. The band brake shown in Fig. 15.27 is applied to a shaft carrying a flywheel of 300-kg mass with a radius of gyration of 400 mm and running at 340 rpm. Find the torque applied due to a pull of 100 N if μ = 0.25. Also, find the number of revolutions of the flywheel before it comes to rest.

(794 N.m; 6.1 rev.)

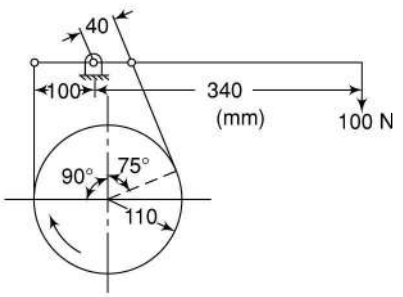

Fig. 15.27

17. A crane is used to support a load of 1.1 tonne on the rope round its barrel of 360 mm diameter (Fig. 15.14). The brake drum diameter is 560 mm, the angle of contact is 300° and the coefficient of friction between the band and the drum is 0.22. What will be the force *F* required at the end of the lever? Take *a* = 150 mm and *l* = 800 mm.

(1902 N)

18. A band and block brake has 10 blocks and each block subtends an angle of 15° at the centre of the wheel. The two ends of the band are fixed to pins on the opposite sides of the brake fulcrum at distances of 40 mm and 200 mm from it. Determine the maximum force required to be applied on the lever at a distance of 300 mm from the fulcrum to absorb 250 kW of power at 280 rpm. The effective diameter of the drum is 840 mm. Take μ = 0.35.

(4440 N)

19. An internal expanding shoe brake has a diameter of 320 mm and a width of 30 mm. The cam forces are equal. Maximum pressure is not to exceed 80 kN/m². φ_1= 15°, φ_2 = 145°, *a* = 220 mm, *c* = 125 mm and μ = 0.32 (Fig. 15.16). Determine the actuating force and the brake torque.

(175.7 N; 48 N.m)

20. The following data refer to a car in which brakes are applied to the front wheels:
Wheel base = 2.8 m
Centre of mass from rear axle = 1.3 m
Centre of mass above ground level = 0.96 m
Coefficient of friction between road and tyres = 0.4
If the speed of the car be 40 km per hour, find the distance travelled by the car before coming to rest when the car
(i) moves up an incline 1 in 16
(ii) moves down an incline 1 in 16
(iii) moves on a level track

(22.5 m; 40.89 m; 29.03 m)

21. The following data refer to a laboratory experiment with rope brake:
Diameter of the flywheel = 1 m
Diameter of the rope = 10 mm
Dead weight on the brake = 50 kg
Speed of the engine = 180 rpm
Spring balance reading = 120 N
Find the power of the engine.

(3527 W)

22. In a belt transmission dynamometer (Fig. 15.20), the diameters of the driving and driven pulleys are 0.36 m and 0.8 m respectively. The power transmitted from the driving to the driven shaft is 20 kW. The speed of the driving shaft is 500 rpm. If *l* = 1.2 m and *a* = 400 mm, determine the weight on the lever. (144.2 kg)

16 GOVERNORS

Introduction

The function of a governor is to maintain the speed of an engine within specified limits whenever there is a variation of load. In general, the speed of an engine varies in two ways—during each revolution (cyclic variation) and over a number of revolutions. In the former case, it is due to variation in the output torque of the engine during a cycle and can be regulated by mounting a suitable flywheel on the shaft. In the latter case, it is due to variation of load upon the engine and requires a governor to maintain the speed. The operation of a flywheel is continuous whereas that of a governor is more or less intermittent. A flywheel may not be used if there is no undesirable cyclic fluctuation of the energy output, but a governor is essential for all types of engines as it adjusts the supply according to the demand.

If the load on the shaft increases, the speed of the engine decreases unless the supply of fuel is increased by opening the throttle valve. On the other hand, if the load on the shaft decreases, the speed of the engine increases unless the fuel supply is decreased by closing the valve sufficiently to slow the engine to its original speed. The throttle valve is operated by the governor through a mechanism for the purpose.

16.1 TYPES OF GOVERNORS

Governors can broadly be classified into two types.

(i) Centrifugal Governor

This is the more common type. Its action depends on the change of speed. It has a pair of masses, known as governor balls, which rotate with a spindle. The spindle is driven by an engine through bevel gears (Fig. 16.1). The action of the governor depends upon the centrifugal effects produced by the masses of the two balls. With the increase in the speed, the balls tend to rotate at a greater radius from the axis. This causes the sleeve to slide up on the spindle and this movement of the sleeve is communicated to the throttle through a bell crank lever. This closes the throttle valve to the required

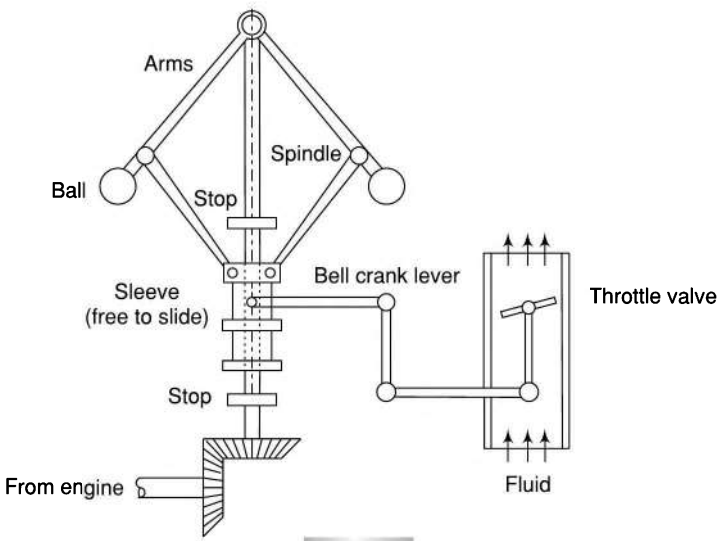

Fig. 16.1

extent. When the speed decreases, the balls rotate at a smaller radius and the valve is opened according to the requirement.

(ii) Inertia Governor

In this type, the positions of the balls are affected by the forces set up by an angular acceleration or deceleration of the given spindle in addition to centrifugal forces on the balls. Using suitable linkages and springs, the change in position of the balls is made to open or close the throttle valve.

Thus, whereas the balls are operated by the actual change of engine speed in the case of centrifugal governors, it is by the rate of change of speed in case of inertia governors. Therefore, the response of inertia governors is faster than that of centrifugal types.

16.2 WATT GOVERNOR (SIMPLE CONICAL GOVERNOR)

Figure 16.2 shows three forms of a simple centrifugal or a Watt governor. In this, a pair of balls (masses) is attached to a spindle with the help of links. In Fig.16.2(a), the upper links are pinned at point O. In the Fig.16.1(b), the upper links are connected by a horizontal link and the governor is known as the *open-arm* type Watt governor. On extending the upper arms, they still meet at O. In Fig.16.2(c), the upper links cross the spindle and are connected by a horizontal link and the governor is known as a *crossed-arm* Watt governor. In this type also, the two links intersect at O. The lower links in every case are fixed to a sleeve free to move on the vertical spindle.

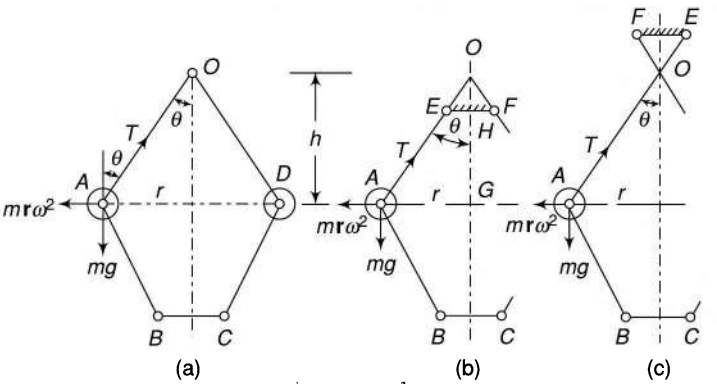

Fig. 16.2

As the spindle rotates, the balls take up a position depending upon the speed of the spindle. If it lowers, they move near to the axis due to reduction in the centrifugal force on the balls and the ability of the sleeve to slide on the spindle. The movement of the sleeve is further taken to the throttle of the engine by means of a suitable linkage to decrease or increase the fuel supply.

The vertical distance from the plane (horizontal) of rotation of the balls to the point of intersection of the upper arms along the axis of the spindle is called the *height of the governor*. The height of the governor decreases with increase in speed, and increases with decrease in speed.

Let m = mass of each ball

h = height of governor

w = weight of each ball (= mg)

ω = angular velocity of the balls, arms and the sleeve

T = tension in the arm

r = radial distance of ball-centre from spindle-axis

Assuming the links to be massless and neglecting the friction of the sleeve, the mass m at A is in static equilibrium under the action of

- Weight **w** (= mg)
- Centrifugal force $mr\omega^2$
- Tension **T** in the upper link

If the sleeve is massless and also friction is neglected, the lower links will be tension free.

The equilibrium of the mass provides

$$T\cos\theta = mg \text{ and } T\sin\theta = mr\omega^2$$

$$\therefore \qquad \tan\theta = \frac{mr\omega^2}{mg} = \frac{r\omega^2}{g}$$

or
$$\frac{r}{h} = \frac{r\omega^2}{g}$$

or
$$h = \frac{g}{\omega^2} = \frac{g}{\left(\frac{2\pi N}{60}\right)} = \left(\frac{60}{2\pi}\right)^2 \times \frac{9.81}{N^2}$$

$$= \frac{895}{N^2}\text{ m} \tag{16.1}$$

or
$$h = \frac{895\ 000}{N^2}\text{ mm}$$

Thus, the height of a Watt governor is inversely proportional to the square of the speed. A close look at this equation would reveal that the variation in h is appreciable for low values of speed N. As the speed N becomes larger, the variation in h becomes very small.

The following table shows the height h with the variation in speed:

N (rpm)	50	100	150	200	300	400
h (mm)	358	89.5	39.8	22.4	9.9	5.6

This shows that in this type of governor, the movement of the sleeve is very less at high speeds and thus is unsuitable for these speeds. However, this drawback has been overcome by loading the governor with a dead weight or by means of a spring. Such governors have been discussed in the sections that follow.

Example 16.1 *In an open-arm type governor [Fig. 16.3(a)], AE = 400 mm, EF = 50 mm and angle θ = 35°. Determine the percentage change in speed when θ decreases to 30°.*

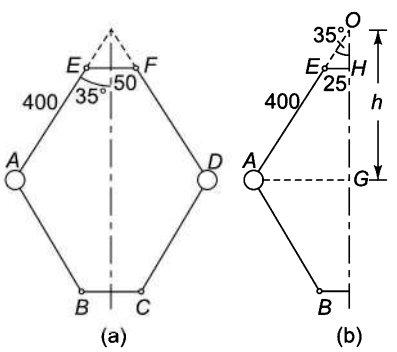

Fig. 16.3

Solution Refer Fig. 16.3(b),

$h = GO = GH + HO = AE\cos\theta + EH\cot\theta$

$h = 400\cos 35° + 25\cot 35°$

$= 363.4$ mm

$h' = 400\cos 30° + 25\cot 30°$

$= 389.7$ mm

Now, $h = \dfrac{g}{\omega^2}$ and $h' = \dfrac{g}{\omega'^2}$

$$\therefore \quad \frac{\omega'}{\omega} = \sqrt{\frac{h}{h'}} = \sqrt{\frac{363.4}{389.7}} = 0.966$$

Decrease in speed = $(1 - 0.966) \times 100 = \underline{3.44\%}$

Alternatively,

$$N = \sqrt{\frac{895000}{h}} = \sqrt{\frac{895000}{363.4}} = 49.63 \text{ rpm}$$

$$N' = \sqrt{\frac{895000}{389.7}} = 47.92 \text{ rpm}$$

$$\text{Decrease} = \frac{N - N'}{N} \times 100 = \frac{49.63 - 47.92}{49.63} = \underline{3.44\%}$$

16.3 PORTER GOVERNOR

If the sleeve of a Watt governor is loaded with a heavy mass, it becomes a Porter governor [Fig.16.4(a)]

Ler M = mass of the sleeve

m = mass of each ball

f = force of friction at the sleeve

The force of friction always acts in a direction opposite to that of the motion. Thus when the sleeve moves up, the force of friction acts in the downward direction and the downward force acting on the sleeve is $(Mg + f)$. Similarly, when the sleeve moves down, the force on the sleeve will be $(Mg - f)$. In general, the net force acting on the sleeve is $(Mg \pm f)$ depending upon whether the sleeve moves upwards or downwards.

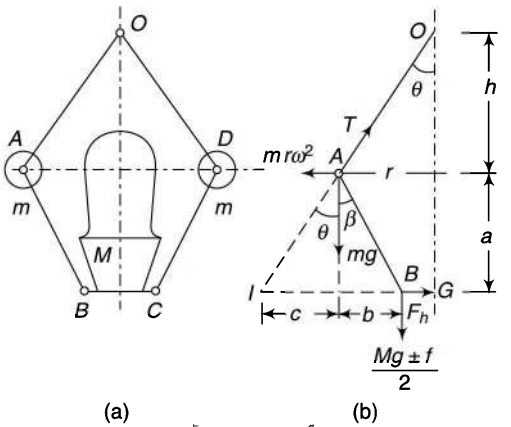

Fig. 16.4

Forces acting on the sleeve and on each ball have been shown in Fig.16.4(b).

Let h = height of the governor

r = distance of the centre of each ball from axis of rotation

The instantaneous centre of rotation of the link AB is at I for the given configuration of the governor. It is because the motion of its two points A and B relative to the link is known. The point A oscillates about the point O and B moves in a vertical direction parallel to the axis. Lines perpendicular to the direction of these motions locates the point I.

Considering the equilibrium of the left-hand half of the governor and taking moments about I,

$$mr\omega^2.a = mg\,c + \frac{Mg \pm f}{2}(c+b)$$

or $$mr\omega^2 = mg\frac{c}{a} + \frac{Mg \pm f}{2}\left(\frac{c}{a} + \frac{b}{a}\right)$$

$$= mg\tan\theta + \frac{Mg \pm f}{2}(\tan\theta + \tan\beta)$$

$$= \tan\theta\left[mg + \frac{Mg \pm f}{2}(1+k)\right] \qquad \left(\text{taking } k = \frac{\tan\beta}{\tan\theta}\right)$$

or $$= \frac{r}{h}\left[mg + \frac{Mg \pm f}{2}(1+k)\right]$$

or $$\omega^2 = \frac{1}{mh}\left(\frac{2mg + (Mg \pm f)(1+k)}{2}\right)$$

or $$\left(\frac{2\pi N}{60}\right)^2 = \frac{g}{h}\left(\frac{2mg + (Mg \pm f)(1+k)}{2mg}\right)$$

$$N^2 = \frac{895}{h}\left(\frac{2mg + (Mg \pm f)(1+k)}{2mg}\right) \qquad (\text{Taking } g = 9.81 \text{ m/s}^2)$$

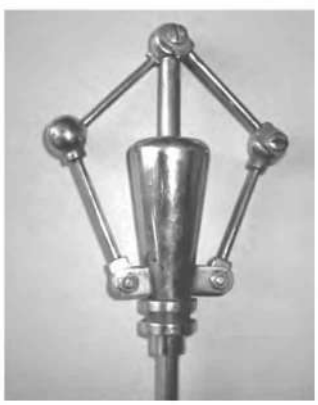

A porter governor

This equation would provide two values of N for the same height of the governor. The phenomenon can be explained as below.

First assume that the sleeve has just moved down. This means that the force acting on the sleeve is $(Mg - f)$ downwards. Now, if the speed of the engine increases, the balls would tend to move away from the axis, but now as the friction has to act in the downward direction, the resistance to the motion would be $(Mg + f)$. Thus until the speed rises to such a value as to overcome this resistance, the sleeve will not move. In the same way, when the sleeve has moved up and the speed decreases, the resistance to the sleeve movement would be only $(Mg - f)$. Thus, until the speed reduces to such a value as to give a force equal to $(Mg - f)$, the sleeve will not move.

Thus, for a given value of h, the governor is insensitive between two values of ω given by Eq. (16.3).

- If $k = 1$, $$N^2 = \frac{895}{h}\left(\frac{mg + (Mg \pm f)}{mg}\right)$$
- If $f = 0$, $$N^2 = \frac{895}{h}\left(\frac{2m + M(1+k)}{2m}\right)$$
- If $k = 1, f = 0$ $$N^2 = \frac{895}{h}\left(\frac{m+M}{m}\right)$$

Example 16.2 *Each arm of a Porter governor is 200 mm long and is pivoted on the axis of the governor. The radii of rotation of the balls at the minimum and the maximum speeds are 120 mm and 160 mm respectively. The mass of the sleeve is 24 kg and each ball is 4 kg. Find the range of speed of the governor. Also determine the range of speed if the friction at the sleeve is 18 N.*

Solution $m = 4$ kg, $M = 24$ kg, $f = 18$ N

At minimum speed, $h = \sqrt{200^2 - 120^2} = 160$ mm [Fig. 16.5(a)]

As $k = 1, f = 0$,

$$N^2 = \frac{895}{h}\left(\frac{m+M}{m}\right) = \frac{895}{0.16}\left(\frac{4+24}{4}\right) = 39\ 156$$

or $N = 197.9$ rpm

At maximum speed, $h = \sqrt{200^2 - 160^2} = 120$ mm [Fig. 16.5(b)]

As $k = 1, f = 0$,

$$N^2 = \frac{895}{h}\left(\frac{m+M}{m}\right) = \frac{895}{0.12}\left(\frac{4+24}{4}\right) = 52\ 208$$

or $N = 228.5$ rpm

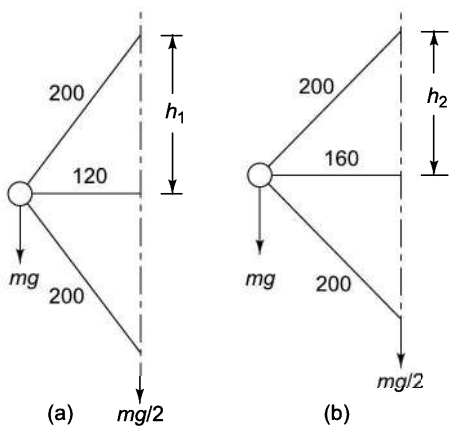

Fig. 16.5

Range of speed = 228.5 – 197.9 = 30.6 rpm

When friction at the sleeve is 18 N

At minimum speed,

$$N^2 = \frac{895}{h}\left(\frac{mg + (Mg - f)}{mg}\right)$$

$$= \frac{895}{0.16}\left(\frac{4 \times 9.81 + (24 \times 9.81 - 18)}{4 \times 9.81}\right)$$

$= 36\ 590$ or $N = 191.3$ rpm

At maximum speed,

$$N^2 = \frac{895}{h}\left(\frac{mg + (Mg + f)}{mg}\right)$$

$$= \frac{895}{0.12}\left(\frac{4 \times 9.81 + (24 \times 9.81 + 18)}{4 \times 9.81}\right)$$

= 55 630 or N = 235.9 rpm

Range of speed = 235.9 – 191.3 = 44.6 rpm

Example 16.3 *In a Porter governor, each of the four arms is 400 mm long. The upper arms are pivoted on the axis of the sleeve whereas the lower arms are attached to the sleeve at a distance of 45 mm from the axis of rotation. Each ball has a mass of 8 kg and the load on the sleeve is 60 kg. What will be the equilibrium speeds for the two extreme radii of 250 mm and 300 mm of rotation of the governor balls?*

Solution Refer Fig. 16.6,

m = 8 kg BG = 45 mm

M = 60 kg OA = 400 mm

We have,

$$mr\omega^2 = \tan\theta\left[mg + \frac{mg \pm f}{2}(1 + k)\right] \quad (f = 0)$$

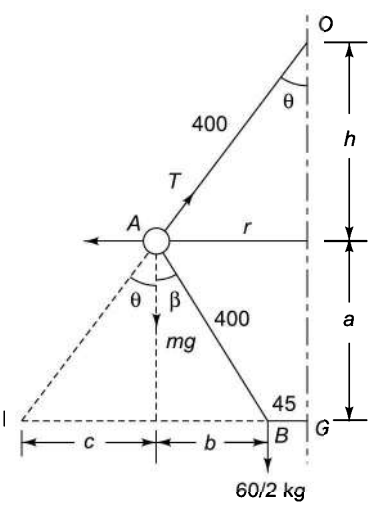

Fig. 16.6

(i) When r = 250 mm

$$\tan\theta = \frac{r}{h} = \frac{r}{\sqrt{(OA)^2 - r^2}}$$

$$= \frac{250}{\sqrt{(400)^2 - (250)^2}} = 0.8$$

$$k = \frac{\tan\beta}{\tan\theta} = \frac{b/a}{\tan\theta}$$

As b = 250 – 45 = 205 mm,

$$a = \sqrt{(AB)^2 - (b)^2}$$

$$= \sqrt{(400)^2 - (205)^2} = 343.4 \text{ mm}$$

$$k = \frac{205/343.4}{0.8} = 0.746$$

$$\therefore \quad 8 \times 0.25 \times \omega^2 =$$

$$0.8\left[8 \times 9.81 + \frac{60 \times 9.81}{2}(1 + 0.746)\right]$$

$2\omega^2$ = 0.8 (78.48 + 513.85)

ω^2 = 237

$$\omega = \frac{2\pi N}{60} = 15.39$$

N = <u>147 rpm</u>

(ii) When r = 300 mm,

$$\tan\theta = \frac{300}{\sqrt{(400)^2 - (300)^2}} = 1.134$$

b = 300 – 45 = 255 mm

$$a = \sqrt{(400)^2 - (255)^2} = 308.2 \text{ mm}$$

$$k = \frac{\tan\beta}{\tan\theta} = \frac{b/a}{\tan\theta} = \frac{255/308.2}{1.134} = 0.73$$

$$\therefore 8 \times 0.3 \times \omega^2 =$$

$$1.134\left[8 \times 9.81 + \frac{60 \times 9.81}{2}(1 + 0.73)\right]$$

$2.4\omega^2$ = 1.134 (78.48 + 509.14)

ω^2 = 277.6

$$\omega = \frac{2\pi N}{60} = 16.66$$

N = <u>159.1 rpm</u>

Also, range of speed = 159.1 – 147 = 12.1 rpm

Example 16.4 *Each arm of a Porter governor is 250 mm long. The upper and lower arms are pivoted to links of 40 mm and 50 mm respectively from the axis of rotation. Each ball has a mass of 5 kg and the sleeve mass is 50 kg. The force of friction on the sleeve of the mechanism is 40 N. Determine the range of speed of the governor for extreme radii of rotation of 125 mm and 150 mm.*

Solution Refer Fig.16.7.

$m = 5$ kg $\qquad AB = AE = 250$ mm

$M = 50$ kg $\qquad BG = 50$ mm

$f = 40$ N $\qquad EH = 40$ mm

(i) When $r = 125$ mm,

$$\sin\theta = \frac{125-40}{250} = 0.34 \qquad \theta = 19.88°$$

$$\tan\theta = \tan 19.88° = 0.362$$

$$\sin\beta = \frac{125-50}{250} = 0.3 \qquad \beta = 17.46°$$

$$\tan\beta = \tan 17.46° = 0.315$$

$$k = \frac{\tan\beta}{\tan\theta} = 0.87$$

As the radii decrease, the sleeve moves down and the force of friction f acts upwards.

$$mr\omega^2 = \tan\theta\left[mg + \frac{Mg-f}{2}(1+k)\right]$$

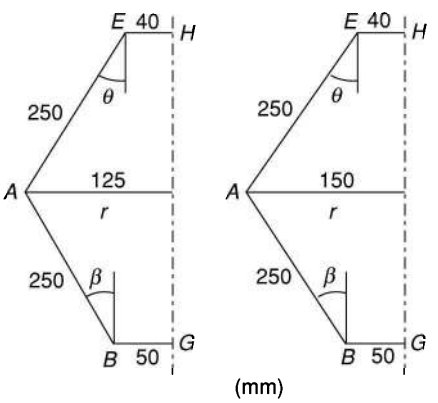

Fig. 16.7

$$5\times 0.125\omega^2 = 0.362$$

$$\left[5\times 9.81 + \frac{50\times 9.81 - 40}{2}(1+0.87)\right]$$

$$\omega^2 = 272.4$$

$$\omega = \frac{2\pi N}{60} = 16.5$$

$$N_{min} = 157.6 \text{ rpm}$$

(ii) When $r = 150$ mm

$$\sin\theta = \frac{150-40}{250} = 0.44 \qquad \theta = 26.1°$$

$$\tan\theta = 0.49$$

$$\sin\beta = \frac{150-50}{250} = 0.4 \qquad \beta = 23.58°$$

$$\tan\beta = 0.436$$

$$k = \frac{0.436}{0.49} = 0.891$$

$$mr\omega^2 = \tan\theta\left[mg + \frac{Mg+f}{2}(1+k)\right]$$

(sleeve moves up)

$$5\times 0.15\omega^2 = 0.49$$

$$\left[5\times 9.81 + \frac{50\times 9.81 + 40}{2}(1+0.891)\right]$$

$$\omega^2 = 359.8$$

$$\omega = \frac{2\pi N}{60} = 18.97$$

$$N_{max} = 181.1 \text{ rpm}$$

Range of speed = 157.6 rpm to 181.1 rpm = <u>23.5 rpm</u>

Example 16.5 *Each arm of a Porter governor is 200 mm long and is hinged at a distance of 40 mm from the axis of rotation. The mass of each ball is 1.5 kg and the sleeve is 25 kg. When the links are at 30° to the vertical, the sleeve begins to rise at 260 rpm. Assuming that the friction force is constant, find the maximum and the minimum speeds of rotation when the inclination of the arms to the vertical is 45°.*

Solution Refer Fig. 16.8.

$r = 200 \sin 30^\circ + 40 = 140$ mm

$$h = \frac{r}{\tan 30^\circ} = \frac{140}{\tan 30^\circ} = 243 \text{ mm}$$

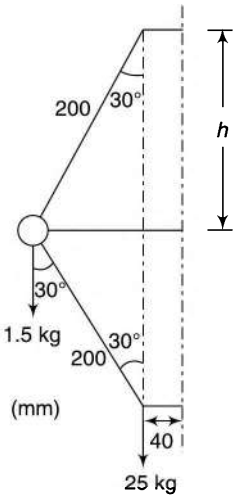

Fig. 16.8

At 30° angle, the sleeve begins to rise; therefore, the friction force is to act downwards.

Thus, $$260^2 = \frac{895}{h}\left(\frac{mg + (Mg + f)}{mg}\right)$$

$$= \frac{895}{0.243}\left(\frac{1.5 \times 9.81 + (25 \times 9.81 + f)}{1.5 \times 9.81}\right)$$

$14.7 + 245.3 + f = 270$

or $f = 10$ N

When the angle is 45°,

$r = 200 \sin 45^\circ + 40 = 181.4$ mm

$$h = \frac{r}{\tan 45^\circ} = \frac{181.4}{\tan 45^\circ} = 181.4 \text{ mm}$$

$$N_1^2 = \frac{895}{0.1814}\left(\frac{1.5 \times 9.81 + (25 \times 9.81 + 10)}{1.5 \times 9.81}\right) = 90\,519$$

$N_1 = 300.9$ rpm

$$N_2^2 = \frac{895}{0.1814}\left(\frac{1.5 \times 9.81 + (25 \times 9.81 - 10)}{1.5 \times 9.81}\right) = 83\,812$$

$-N_2 = 289.5$ rpm

16.4 PROELL GOVERNOR

A Porter governor is known as a Proell governor if the two balls (masses) are fixed on the upward extensions of the lower links which are in the form of bent links *BAE* and *CDF* [Fig. 16.9(a)].

Considering the equilibrium of the link *BAE* which is under the action of [Fig. 16.9(b)]

- the weight of the ball, mg
- the centrifugal force, $mr'\omega^2$
- the tension in the link *AO*
- the horizontal reaction of the sleeve.
- the weight of sleeve and friction, $\frac{1}{2}(Mg \pm f)$

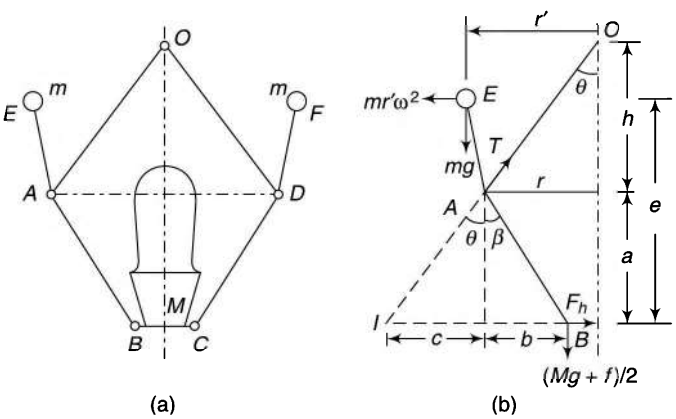

Fig. 16.9

As before, *I* is the instantaneous centre of the link *BAE*.

Taking moments about *I*,

$$mr'\omega^2 e = mg\,(c + r - r') + \frac{Mg \pm f}{2}(c + b)$$

where b, c, d and r are the dimensions as indicated in the diagram.

$$mr'\omega^2 = \frac{1}{e}\left[mg(c + r - r') + \frac{Mg \pm f}{2}(c + b)\right] \tag{16.4}$$

In the position when AE is vertical, i.e., neglecting its obliquity

$$\begin{aligned} mr'\omega^2 &= \frac{1}{e}\left[mgc + \frac{Mg \pm f}{2}(c + b)\right] \\ &= \frac{a}{e}\left[mg\frac{c}{a} + \frac{Mg \pm f}{2}\left(\frac{c}{a} + \frac{b}{a}\right)\right] \\ &= \frac{a}{e}\left[mg\tan\theta + \frac{Mg \pm f}{2}(\tan\theta + \tan\beta)\right] \\ &= \frac{a}{e}\tan\theta\left[mg + \frac{Mg \pm f}{2}(1 + k)\right] \\ &= \frac{a}{e}\frac{r}{h}\left[mg + \frac{Mg \pm f}{2}(1 + k)\right] \end{aligned} \tag{16.5}$$

$$\left(\frac{2\pi N}{60}\right)^2 = \frac{a}{e}\frac{g}{h}\left(\frac{2mg + (Mg \pm f)(1 + k)}{2mg}\right)$$

$$N^2 = \frac{895}{h}\frac{a}{e}\left(\frac{2mg + (Mg \pm f)(1 + k)}{2mg}\right) \qquad \text{(Taking } g = 9.81 \text{ m/s}^2\text{)}$$

- If $k = 1$, $$N^2 = \frac{895}{h}\frac{a}{e}\left(\frac{mg + (Mg \pm f)}{mg}\right)$$
- If $f = 0$, $$N^2 = \frac{895}{h}\frac{a}{e}\left(\frac{2m + M(1 + k)}{2m}\right)$$
- If $k = 1, f = 0$ $$N^2 = \frac{895}{h}\frac{a}{e}\left(\frac{m + M}{m}\right)$$

Example 16.6 *Each arm of a Proell governor is 240 mm long and each rotating ball has a mass of 3 kg. The central load acting on the sleeve is 30 kg. The pivots of all the arms are 30 mm from the axis of rotation. The vertical height of the governor is 190 mm. The extension links of the lower arms are vertical and the governor speed is 180 rpm when the sleeve is in the mid-position. Determine the lengths of the extension links and the tension in the upper arms.*

Solution Refer Fig. 16.10.

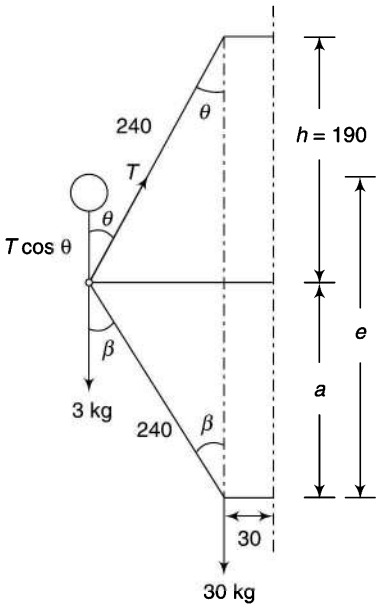

Fig. 16.10

$m = 3$ kg $\qquad M = 30$ kg

$h = 190$ mm

$$N^2 = \frac{895}{h} \cdot \frac{a}{e}\left(\frac{m+M}{m}\right)$$

$$180^2 = \frac{895}{0.19} \cdot \frac{0.19}{e}\left(\frac{3+30}{3}\right)$$

$e = 0.304$ m

Therefore, length of the extension links

$= e - a = 304 - 190 = \underline{104 \text{ mm}}$

Let T be the tension in the upper arms.

Considering the vertical components of the forces on the lower link.

$$T \cos\theta = mg + \frac{Mg}{2}$$

$$\cos\theta = \frac{0.19}{0.24} = 0.792$$

$$T \times 0.792 = 3 \times 9.81 + \frac{30 \times 9.81}{2}$$

$T = \underline{223 \text{ N}}$

Example 16.7 *The mass of each ball of a Proell governor is 7.5 kg and the load on the sleeve is 80 kg. Each of the arms is 300 mm long. The upper arms are pivoted on the axis of rotation whereas the lower arms are pivoted to links of 40 mm from the axis of rotation. The extensions of the lower arms to which the balls are attached are 100 mm long and are parallel to the governor axis at the minimum radius. Determine the equilibrium speeds corresponding to extreme radii of 180 mm and 240 mm.*

Solution When AE is vertical, $r' = r = 180$ mm[Fig. 16.11(a)].

$$mr\omega^2 = \frac{a}{e}\tan\theta\left[mg + \frac{Mg}{2}(1+k)\right]$$

(friction neglected)

we have, $a = \sqrt{(300)^2 - (180-40)^2} = 265.3$ mm

$e = 265.3 + 100 = 365.3$ mm

$$\sin\theta = \frac{180}{300} = 0.6; \qquad \theta = 36.87°$$

$\tan\theta = 0.75$

$$\sin\beta = \frac{180-40}{300} = 0.467; \quad \beta = 27.82°$$

$\tan\beta = 0.528$

$$k = \frac{\tan\beta}{\tan\theta} = \frac{0.528}{0.75} = 0.704$$

$$7.5 \times 0.18 \times \omega^2 = \frac{0.2653}{0.3653} \times 0.75$$

$$\left[7.5 \times 9.81 + \frac{80 \times 9.81}{2}(1 + 0.704)\right]$$

$\omega^2 = 299.5$

$$\omega = \frac{2\pi N}{60} = 17.305$$

$N = \underline{165.3 \text{ rpm}}$

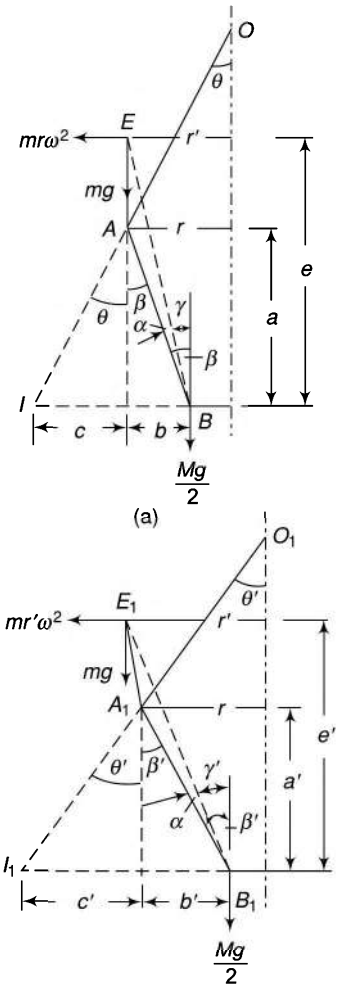

Fig. 16.11

$$BE = \sqrt{e^2 + b^2} = \sqrt{(365.3)^2 + (140)^2}$$
$$= 391.2 \text{ mm}$$

$$\cos\gamma = \frac{e}{BE} = \frac{365.3}{391.2} = 0.934 \qquad \gamma = 20.97°$$

$$\sin\beta = \frac{b}{AB} = \frac{140}{300} = 0.467 \qquad \beta = 27.82°$$

$$\alpha = 27.82° - 20.97° = 6.85°$$

$$\sin\beta' = \frac{b'}{A_1B_1} = \frac{240-40}{300} = 0.667 \qquad \beta' = 41.81°$$

$$\therefore\ \gamma' = \beta' - \alpha = 41.81° - 6.85° = 34.96°$$

[Refer Fig.16.11(b)]

$e' = B_1E_1 \cos\gamma' = BE \cos y' = 391.2 \cos 34.96°$
$= 320.6$ mm

$r' = B_1E_1 \sin\gamma' + 40 = 391.2 \sin 34.96° + 40$
$= 264.2$ mm

$b' = 200$ mm

$a' = A_1B_1 \cos\beta' = 300 \cos 41.81° = 223.6$ mm

$$\sin\theta' = \frac{240}{300} = 0.8 \qquad \theta' = 53.13°$$

$c' = \alpha' \tan\theta' = 223.6 \tan 53.13° = 298.1$ mm

Taking moments about I,

$$mr'\omega^2 e' = mg(c' + r - r') + \frac{Mg}{2}(c' + b')$$

$7.5 \times 0.2642 \times \omega^2 \times 0.3206$
$= 7.6 \times 9.81\ (0.2981 + 0.24 + 0.2642)$

$$+ \frac{80 \times 9.81}{2}(0.2981 + 0.2)$$

$\omega^2 = 339.4$

$$\omega = \frac{2\pi N}{60} = 18.4$$

$N = \underline{175.9 \text{ rpm}}$

16.5 HARTNELL GOVERNOR

In this type of governor, the balls are controlled by a spring as shown in Fig. 16.12(a). Initially, the spring is fitted in compression so that a force is applied to the sleeve. Two bell-crank levers, each carrying a mass at one end and a roller at the other, are pivoted to a pair of arms which rotate with the spindle. The rollers fit into a groove in the sleeve.

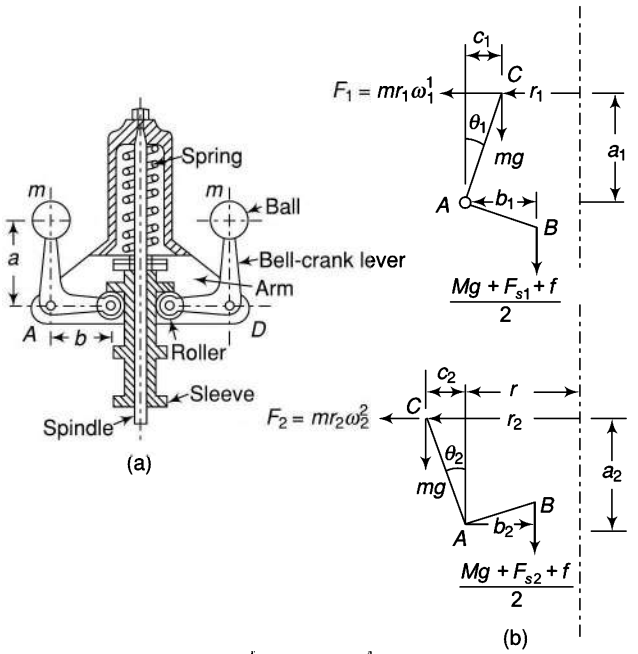

Fig. 16.12

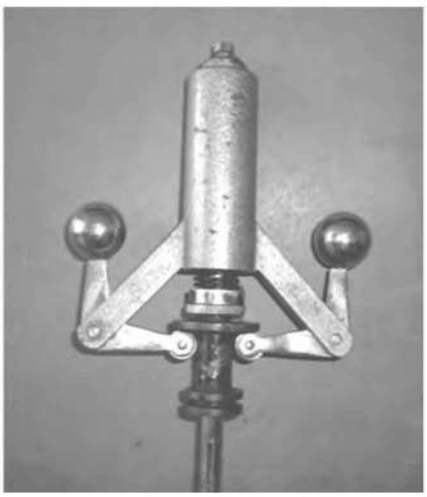

A Hartnell governor

As the speed increases and the balls move away from the spindle axis, the bell-crank levers move on the pivot and lift the sleeve against the spring force. If the speed decreases, the sleeve moves downwards. The movement of the sleeve is communicated to the throttle of the engine. The spring force can be adjusted with the help of a screw cap.

Figure 16.12(b) shows the forces acting on the bell-crank lever in two positions (assuming that the sleeve moves up so that f is taken positive).

Let F = centrifugal force = $mr\omega^2$

F_s = spring force

Taking moments about the fulcrum A,

$$F_1 a_1 = \frac{1}{2}(Mg + F_{s1} + f)b_1 + mgc_1 \tag{16.6}$$

$$F_2 a_2 = \frac{1}{2}(Mg + F_{s2} + f)b_2 + mgc_2 \tag{16.6a}$$

In the working range of the governor, θ is usually small and so the obliquity effects of the arms of the bell-crank levers may be neglected. In that case,

$a_1 = a_2 = a$, $b_1 = b_2 = b$, $c_1 = c_2 = 0$

$$F_1 a = \frac{1}{2}(Mg + F_{s1} + f)b \tag{i}$$

and

$$F_2 a_2 = \frac{1}{2}(Mg + F_{s2} + f)b \tag{ii}$$

Subtracting (i) from (ii)

$$(F_2 - F_1)\,a = \frac{1}{2}(F_{s2} - F_{s1})b$$

or

$$F_{s2} - F_{s1} = \frac{2a}{b}(F_2 - F_1)$$

Let s = stiffness of the spring

h_1 = movement of the sleeve

$$F_{s2} - F_{s1} = h_1 s = \frac{2a}{b}(F_2 - F_1) \quad \text{or} \quad s = \frac{2}{h_1}.\frac{a}{b}.(F_2 - F_1)$$

But

$$h_1 = \theta.b = \frac{r_2 - r_1}{a}.b$$

$\therefore$

$$s = \frac{2}{r_2 - r_1}.\left(\frac{a}{b}\right)^2.(F_2 - F_1) = 2\left(\frac{a}{b}\right)^2\left(\frac{F_2 - F_1}{r_2 - r_1}\right) \tag{16.7}$$

Example 16.8 *In a Hartnell governor, the extreme radii of rotation of the balls are 40 mm and 60 mm, and the corresponding speeds are 210 rpm and 230 rpm. The mass of each ball is 3 kg. The lengths of the ball and the sleeve arms are equal. Determine the initial compression and the constant of the central spring.*

Solution

$$\omega_1 = \frac{2\pi \times 210}{60} = 22 \text{ rad/s};$$

$$\omega_2 = \frac{2\pi \times 230}{60} = 23.04 \text{ rad/s}$$

$$F_1 = mr_1\omega_1^2 = 3 \times 0.04 \times 22^2 = 58.1 \text{ N}$$

and $$F_2 = mr_2\omega_2^2 = 3 \times 0.06 \times 23.04^2 = 95.6 \text{ N}$$

Spring constant,

$$s = 2\left(\frac{a}{b}\right)^2\left(\frac{F_2 - F_1}{r_2 - r_1}\right)$$

$$= 2\,(1)^2\left(\frac{95.6 - 58.1}{60 - 40}\right) = \underline{3.75 \text{ N/mm}}$$

We have, $F_1 a = \frac{1}{2}(Mg + F_{s1} + f)b$ or $F_1 = \frac{F_{s1}}{2}$

$(M = 0, f = 0,\ a = b)$

or $F_{s1} = 2 \times 58.1 = 116.2$ N

Initial compression $= \frac{116.2}{3.75} = \underline{31 \text{ mm}}$

Example 16.9 *In a spring-loaded governor of the Hartnell type, the lengths of the horizontal and the vertical arms of the bell-crank lever are 40 mm and 80 mm respectively. The mass of each ball is 1.2 kg. The extreme radii of rotation of the balls are 70 mm and 105 mm. The distance of the fulcrum of each bell-crank lever is 75 mm from the axis of rotation of the governor. The minimum equilibrium speed is 420 rpm and the maximum equilibrium speed is 4% higher than this. Neglecting the obliquity of the arms, determine the*

(i) spring stiffness,

(ii) initial compression, and

(iii) equilibrium speed corresponding to radius of rotation of 95 mm.

Solution

$$\omega_1 = \frac{2\pi \times 420}{60} = 44 \text{ rad/s};$$

$$\omega_2 = 44 \times 1.04 = 45.76 \text{ rad/s}$$

$$F_1 = mr_1\omega_1^2 = 1.2 \times 0.07 \times 44^2 = 162.6 \text{ N}$$

and $F_2 = mr_2\omega_2^2 = 1.2 \times 0.105 \times 45.76^2 = 263.8$ N

(i) Spring constant,

$$s = 2\left(\frac{a}{b}\right)^2\left(\frac{F_2 - F_1}{r_2 - r_1}\right) = 2\left(\frac{80}{40}\right)^2\left(\frac{263.8 - 162.6}{105 - 70}\right)$$

$$= \underline{23.14 \text{ N/mm}}$$

(ii) We have, $F_1 a = \frac{1}{2}(Mg + F_{s1} + f)b$

or $F_1 = \frac{F_{s1}}{4}$ $\quad (M = 0, f = 0,\ a = 2b)$

or $F_{s1} = 4 \times 162.6 = 650.4$ N

Initial compression $= \frac{650.4}{23.14} = \underline{28.1 \text{ mm}}$

(iii) Let F_3 be the centrifugal force at $r_3 = 95$ mm,

Then $s = 2\left(\frac{a}{b}\right)^2 \left(\frac{F_3 - F_1}{r_3 - r_1}\right)$

or $23.14 = 2(2)^2 \left(\frac{F_3 - 162.6}{95 - 70}\right)$

or $F_3 = 162.6 + 72.3 = 234.9$ N

or $mr_3\omega_3^2 = 234.9$ or $1.2 \times 0.095 \times \omega^2 = 234.9$

or $\omega = 45.393$ rad/s or $\frac{2\pi N}{60} = 45.393$

or N = 433.5 rpm

* The distance of the fulcrum of each bell-crank lever from the axis of rotation of the governor (=75 mm) is superfluous data.

Example 16.10 *The arms of a Hartnell governor are of equal length. When the sleeve is in the mid-position, the masses rotate in a circle with a diameter of 150 mm (the arms are vertical in the mid-position). Neglecting friction, the equilibrium speed for this position is 360 rpm. Maximum variation of speed, taking friction into account, is to be 6% of the mid-position speed for a maximum sleeve movement of 30 mm. The sleeve mass is 5 kg and the friction at the sleeve is 35 N.*

Assuming that the power of the governor is sufficient to overcome the friction by 1% change of speed on each side of the mid-position, find (neglecting obliquity effect of arms), the

(i) mass of each rotating ball

(ii) spring stiffness

(iii) initial compression of the spring

Solution

$$\omega = \frac{2\pi \times 360}{60} = 37.7 \text{ rad/s}$$

(i) Considering the friction at the mid-position,

$$mr\omega_1^2 a = \frac{1}{2}(Mg + F_s + f)b$$

$$m \times \left(\frac{0.150}{2}\right) \times (37.7 \times 1.01)^2$$

$$= \frac{1}{2}(5 \times 9.81 + F_s + 35) \quad (a = b) \qquad \text{(i)}$$

and $mr\omega_2^2 a = \frac{1}{2}(Mg + F_s - f)b$

$$m \times \left(\frac{0.150}{2}\right) \times (37.7 \times 0.99)^2$$

$$= \frac{1}{2}[5 \times 9.81 + F_s - 35] \qquad \text{(ii)}$$

Subtracting (ii) from (i)

$m \times 0.075 \times (37.7)^2\ [(1.01)^2 - (0.99)^2]$

$$= \frac{1}{2} \times (35 + 35)$$

or $m = \underline{8.21 \text{ kg}}$

(ii) In the extreme positions,

$$mr_2\omega_2^2 a = \frac{1}{2}(Mg + F_{s2} + f)b$$

$$8.21 \times \left(0.075 + \frac{0.03}{2}\right) \times (37.7 \times 1.06)^2$$

$$= \frac{1}{2}(5 \times 9.81 + F_{s2} + 35) \quad (a = b)$$

$F_{s2} = 2275.8$ N

$$mr_1\omega_1^2 a = \frac{1}{2}(Mg + F_{s1} - f)b$$

$$8.21 \times \left(0.075 - \frac{0.03}{2}\right) \times (37.7 \times 0.94)^2$$

$$= \frac{1}{2}(5 \times 9.81 + F_{s1} - 35)$$

$F_{s1} = 1223.2$ N

$h_1 s = F_{s2} - F_{s1}$

$0.03 \times s = 2275.8 - 1223.2$

$s = 35\ 088$ N/m or $\underline{35.088 \text{ N/mm}}$

(iii) Initial compression $= \frac{F_{s1}}{s} = \frac{1223.2}{35.088}$

$= \underline{34.86 \text{ mm}}$

Example 16.11 *In a spring-loaded Hartnell type of governor, the mass of each ball is 4 kg and the lift of the sleeve is 40 mm. The governor begins to float at 200 rpm when the radius of the ball path is 90 mm. The mean working speed of the governor is 16 times the range of speed when friction is neglected. The lengths of the ball and roller arms of the bell-crank lever are 100 mm and 80 mm respectively. The pivot centre and the axis of governor are 115 mm apart. Determine the initial compression of the spring, taking into account the obliquity of arms.*

Assuming the friction at the sleeve to be equivalent to a force of 15 N, determine the total alteration in speed before the sleeve begins to move from the mid-position.

Solution Refer Fig. 16.13.

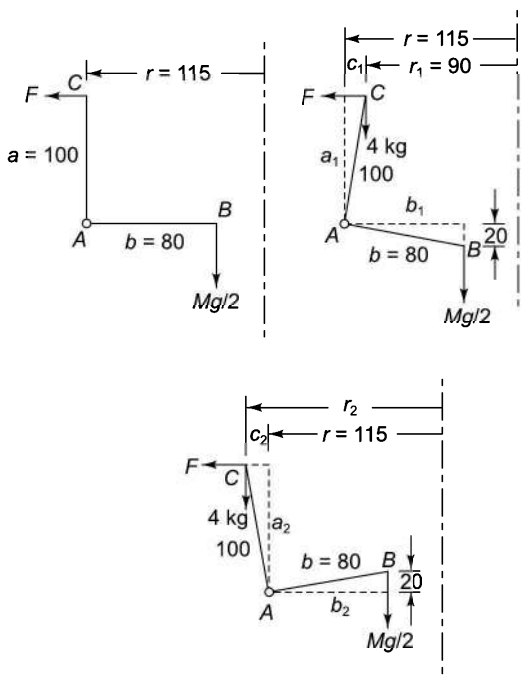

Fig. 16.13

$m = 4$ kg $\qquad N_1 = 200$ rpm

$h_1 = 40$ mm $\qquad r_1 = 90$ mm

$a = 100$ mm $\qquad r = 115$ mm

$b = 80$ mm

Mean speed, $N = \dfrac{N_1 + N_2}{2}$

As $\quad N = 16\,(N_2 - N_1)$

$$\therefore \quad \frac{N_1 + N_2}{2} = 16\,(N_2 - N_1)$$

$$\text{or} \quad \frac{200 + N_2}{2} = 16\,(N_2 - 200)$$

$N_2 = 212.9$ rpm

Angle turned by bell-crank lever between two extreme positions

$$= \frac{\text{Lift}\,(h_1)}{b} = \frac{c_1 + c_2}{a}$$

$$\text{or} \quad c_1 + c_2 = h_1 \frac{a}{b} = 40 \times \frac{100}{80} = 50 \text{ mm}$$

But $\quad c_1 = r - r_1 = 115 - 90 = 25$ mm

$c_2 = 50 - 25 = 25$ mm

$r_2 = r + c_2 = 115 + 25 = 140$ mm

$$b_1 = b_2 = \sqrt{b^2 - (h/2)^2}$$

$$= \sqrt{(80)^2 - (20)^2} = 77.46 \text{ mm}$$

$$a_1 = a_2 = \sqrt{(100)^2 - (25)^2} = 96.82 \text{ mm}$$

$$\omega_1 = \frac{2\pi \times 200}{600} = 20.94 \text{ rad/s}$$

$$\omega_2 = \frac{2\pi \times 212.9}{60} = 22.29 \text{ rad/s}$$

In the extreme positions,

$$m r_1 \omega_1^2 a_1 = \frac{1}{2} F_{S1} b_1 + mg\, c_1 \qquad (M = 0, f = 0)$$

$$4 \times 0.09 \times (20.94)^2 \times 0.096\,82 = \frac{1}{2}$$

$$F_{s1} \times 0.077\,46 + 4 \times 9.81 \times 0.025$$

$F_{s1} = 392.5$ N

$$m r_2 \omega_2^2 a_2 = \frac{1}{2} F_{s2} b_2 + mg\, c_2$$

$$4 \times 0.14 \times (22.29)^2 \times 0.096\,82 = \frac{1}{2}$$

$$F_{s2} \times 0.077\,46 + 4 \times 9.81 \times 0.025$$

$F_{s2} = 698$ N

$h_1 s = F_{s2} - F_{s1}$

$40 \times s = 698 - 392.5$

$s = 7.64$ N/mm

Initial compression $= \dfrac{F_{s1}}{s} = \dfrac{392.5}{7.64} = \underline{51.37 \text{ mm}}$

F_s at mid-position $= F_{s1} + 20\,s$

$= 392.5 + 7.64 \times 20 = 543.3$ N

Mean speed $= \dfrac{N_1 + N_2}{2}$

$= \dfrac{212.9 - 200}{2} = 206.45$ rpm

At the mid-position, taking friction into account,

$$mr\omega^2 a = \frac{1}{2}(F_s + f)b$$

$$4 \times 0.115 \times \omega^2 \times 0.1 = \frac{1}{2}(545.3 + 15) \times 0.08$$

$$\omega_1^2 = 487.2$$

$$\omega_1 = \frac{2\pi N_1}{60} = 22.07$$

$N_1 = 210.8$ rpm

Also $mr\omega_2^2 a = \dfrac{1}{2}(F_S - f)b$

$$4 \times 0.115 \times \omega_2^2 \times 0.1 = \frac{1}{2}(545.3 - 15) \times 0.08$$

$$\omega_2^2 = 461.13$$

$$\omega_2 = \frac{2\pi N}{60} = 21.47$$

$N_2 = 205.1$ rpm

Alteration at speed $= 210.8 - 205.1 = \underline{5.7 \text{ rpm}}$

16.6 HARTUNG GOVERNOR

A Hartung type of governor is shown in Fig. 16.14. It is a spring-controlled governor in which the vertical arms of the bell-crank lever are fitted with spring balls. The springs compress against the frame of the governor while the rollers at the horizontal arm press against the sleeve.

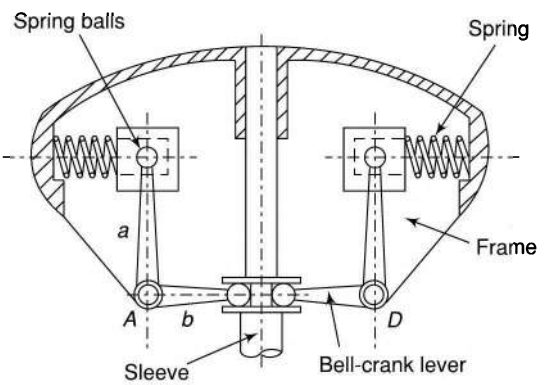

Fig. 16.14

Let F = centrifugal force

m = mass of each ball

S = spring force

s = stiffness of the spring

M = mass of sleeve

r = radial distance of the masses

ω = angular velocity of the balls at radius r

r_o = radius at which the spring force is zero

a = length of vertical arm of bell-crank lever

b = length of horizontal arm of bell-crank lever

Neglecting the obliquity of the arms and taking moments about the fulcrum A,

$$F.\,a = S.a + \frac{Mg}{2}.b$$

or

$$mr\omega^2.a = s(r - r_o).a + \frac{Mg}{2}.b$$

Example 16.12 *In a spring-controlled Hartung type of governor, the length of the ball arm is 84 mm and the sleeve arm is 126 mm. When in the mid-position, each spring is compressed by 60 mm and the radius of rotation of the mass centres is 160 mm. The mass of the sleeve is 18 kg and each ball is 4 kg. The spring stiffness is 12 kN/m of compression and total lift of the sleeve is 24 mm. Determine the ratio of the range of speed to the mean speed of the governor. Also find the speed in the mid-position. Neglect the moment due to the revolving masses when the arms are inclined.*

Solution

$m = 4$ kg	$r = 160$ mm
$M = 18$ kg	$s = 12$ kN/m
$a = 84$ mm	$r_o = 160\text{-}60 = 100$ mm
$b = 126$ mm	$h = 24$ mm

In the mid-position [Fig. 16.15(a)],

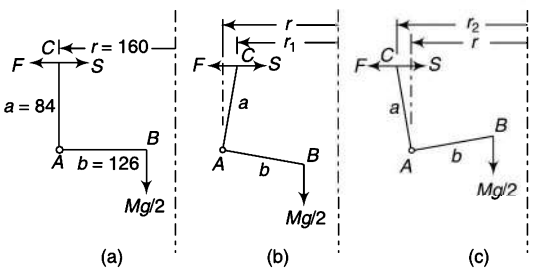

Fig. 16.15

$$mr\omega^2.a = s(r - r_o).a + \frac{Mg}{2}.b$$

$$4 \times 0.16\ \omega^2 \times 0.084 = 12\ 000 \times 0.06. \times 0.084 + \frac{18 \times 9.81}{2} \times 0.126$$

$= 60.48 + 11.125$

$\omega^2 = 1332$

$\omega = 36.5$ rad/s

$$= \frac{36.5 \times 60}{2\pi} \text{ or } 348.5 \text{ rpm}$$

Thus, mean speed = 348.5 rpm

For the minimum speed, from the Fig. 16.15.(b), (neglecting obliquity of arms)

$$\frac{r - r_1}{a} = \frac{h}{b}$$

$$\text{or } r_1 = r - h.\frac{a}{b} = 0.16 - \frac{0.24}{2}.\frac{0.084}{0.126} = 0.152 \text{ mm}$$

$$4 \times 0.152\omega^2 \times 0.084 = 12\ 000 \times (0.152\text{–}0.1) \times 0.084 + \frac{18 \times 9.81}{2} \times 0.126$$

$= 52.416 + 11.125$

$\omega^2 = 1244$

$\omega = 35.27$ rad/s

$$= \frac{35.27 \times 60}{2\pi} \text{ or } 336.8 \text{ rpm}$$

Thus, minimum speed = 336.8 rpm

For the maximum speed, from the Fig. 16.15 (c), (neglecting obliquity of arms)

$$\frac{r_2 - r}{a} = \frac{h}{b}$$

$$\text{or } r_2 = r + h.\frac{a}{b} = 0.16 + \frac{0.24}{2}.\frac{0.084}{0.126} = 0.168 \text{ mm}$$

$$4 \times 0.168\ \omega^2 \times 0.084 = 12\ 000 \times (0.168 - 0.1) \times 0.084 + \frac{18 \times 9.81}{2} \times 0.126$$

$= 68.544 + 11.125$

$\omega^2 = 1411.4$

$\omega = 37.57$ rad/s

$$= \frac{37.57 \times 60}{2\pi} \text{ or } 358.75 \text{ rpm}$$

Thus, mean speed = 358.75 rpm

Range of speed = 358.75 – 336.8 = 21.95 rpm

Ratio of range of speed to mean speed

$$= \frac{21.95}{348.5} = 0.063$$

16.7 WILSON–HARTNELL GOVERNOR (RADIAL-SPRING GOVERNOR)

A Wilson–Hartnell governor is a spring-loaded type of governor. In this, two bell-crank levers are pivoted at the ends of two arms which rotate with the spindle [Fig. 16.16(a)]. The vertical arms of the bell-crank

levers support the two balls at their ends while the horizontal arms carry two rollers at their ends. The two balls are connected by two main springs arranged symmetrically on either side of the sleeve. While rotating, when the ball radius increases with the increase in speed, the springs exert an inward pull F_s on the balls and the rollers press against the sleeve which is raised, closing the throttle value.

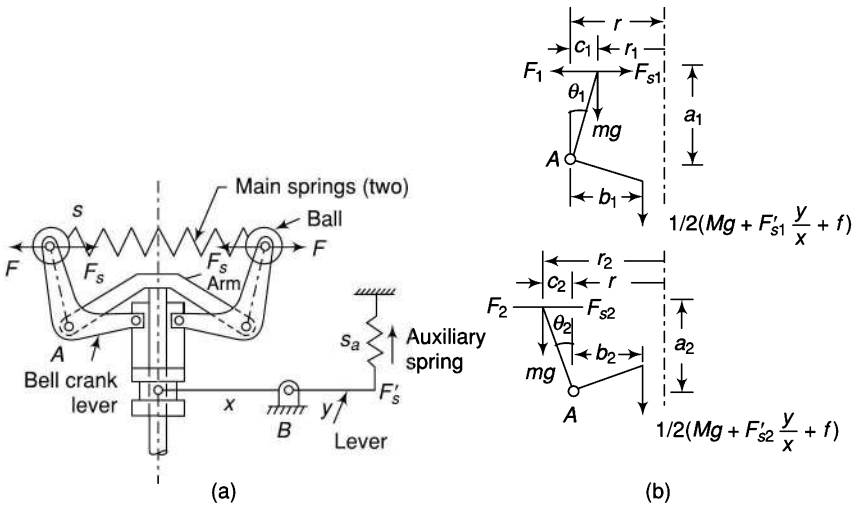

Fig. 16.16

Usually, the main springs are not adjustable and, for this reason, an adjustable auxiliary spring is provided. It is attached to one end of a lever, the other end of which fits into a groove in the sleeve. The lever is pivoted at a fulcrum B. The auxiliary spring tends to keep the sleeve down so that it assists each main spring, i.e., main and the auxiliary springs are in tension simultaneously.

Let s = stiffness of each of the main springs

S_a = stiffness of the auxiliary spring

F'_s = force applied by the auxiliary spring

Assuming that the sleeve moves up, take moments about the fulcrum A in two positions [Fig. 16.16(b)],

$$F_1 a_1 - F_{s1} a_1 = \frac{1}{2}\left(Mg + F'_{s1}\frac{y}{x} + f\right) b_1 + mg\, c_1 \tag{16.8}$$

$$F_2 a_2 - F_{s2} a_2 = \frac{1}{2}\left(Mg + F'_{s2}\frac{y}{x} + f\right) b_2 + mg\, c_2 \tag{16.8a}$$

If obliquity effects are neglected,

$$a_1 = a_2 = a, \quad b_1 = b_2 = b \quad \text{and} \quad c_1 = c_2 = 0$$

$$(F_1 - F_{s1})\, a = \frac{1}{2}\left(Mg + F'_{s1}\frac{y}{x} + f\right) b \tag{i}$$

$$(F_2 - F_{s2})\, a = \frac{1}{2}\left(Mg + F'_{s2}\frac{y}{x} + f\right) b \tag{ii}$$

Subtracting (i) form (ii),

$$a\,(F_2 - F_1) - a\,(F_{s2} - F_{s1}) = (F'_{s2} - F'_{s1})\,\frac{yb}{2x} \tag{iii}$$

The main spring consists of two springs. Therefore, the force exerted is given by,

$F_{s2} - F_{s1}$ = 2 × Force exerted by each spring

= 2 × Stiffness of each spring × Elongation of each spring

$= 2 \times s \times 2 \times (r_2 - r_1)$
$= 4s\,(r_2 - r_1)$

Let h_1 = movement of the sleeve
and h_2 = deflection of the auxiliary spring
Then

$$F'_{s2} - F'_{s1} = h_{2\,Sa}$$
$$= \left(h_1 \frac{y}{x}\right) S_a$$
$$= (r_2 - r_1)\frac{b}{a}\frac{y}{x} S_a$$

Then (iii) becomes,

$$a(F_2 - F_1) - 4as(r_2 - r_1) = (r_2 - r_1)\frac{b}{a}\frac{y}{x} S_a \frac{yb}{2x}$$

or
$$(F_2 - F_1) - 4s(r_2 - r_1) + (r_2 - r_1)\frac{S_a}{2} S_a \left(\frac{b}{a}\frac{y}{x}\right)^2$$

or
$$\frac{F_2 - F_1}{r_2 - r_1} = 4s + \frac{S_a}{2}\left(\frac{b}{a}\frac{y}{x}\right)^2 \tag{16.9}$$

To find the stiffness of the main springs while using this equation, the stiffness of the auxiliary spring may be fixed first.

Example 16.13 *In a Wilson–Hartnell type of governor, the mass of each ball is 5 kg. The lengths of the ball arm and the sleeve arm of each bell-crank lever are 100 mm and 80 mm respectively. The stiffness of each of the two springs attached directly to the balls is 0.4 N/mm. The lever for the auxiliary spring is pivoted at its midpoint. When the radius of rotation is 100 mm, the equilibrium speed is 200 rpm. If the sleeve is lifted by 8 mm for an increase of speed of 6%, find the required stiffness of the auxiliary spring.*

Solution

$m = 5$ kg	$s = 0.4$ N/mm = 400 N/m
$r_1 = 100$ mm	$a = 100$ mm
$N_1 = 200$ rpm	$b = 80$ mm
	$y/x = 1$

We have,

$$\frac{F_2 - F_1}{r_2 - r_1} = 4s + \frac{S_a}{2}\left(\frac{b}{a} \times \frac{y}{x}\right)^2$$

When $r_1 = 100$ mm, $N_1 = 200$ rpm.

$$\omega_1 = \frac{200 \times 2\pi}{60} = 20.94 \text{ rad/s}$$

$F_1 = mr_1\omega_1^2 = 5 \times 0.1 \times (20.94)^2 = 219.2$ N

For 6% rise of speed,

$\omega^2 = 20.94 \times 1.06 = 22.2$ rad/s

For sleeve rise of 8 mm,

Increase in ball radius $= 8 \times \dfrac{100}{80} = 10$ mm

$r_2 = 100 + 10 = 110$ mm
$F_2 = mr_2\,\omega_2^2 = 5 \times 0.11 \times (22.2)^2 = 271.1$ N

$$\frac{271.1 - 219.2}{0.11 - 0.1} = 4 \times 400 + \frac{S_a}{2}\left(\frac{0.08}{0.1} \times 1\right)^2$$

(Refer Eq. (16.9)]

$S_a = 11\,219$ N/m or <u>11.219 N/mm</u>

16.8 PICKERING GOVERNOR

A Pickering governor consists of three leaf springs which are arranged at equal angular intervals around the governor spindle (Fig. 16.17), only one leaf spring is shown in the figure. The upper end of each spring is fixed by a screw to a hexagonal nut attached to the spindle. The lower end is fastened to the sleeve which can move up and down the governor spindle. Each spring has a fly mass m attached at its centre. As the spindle rotates, a centrifugal force is exerted on the leaf spring at the centre which causes it to deflect. This deflection makes the sleeve move up. A stop is also provided to limit the movement of the sleeve.

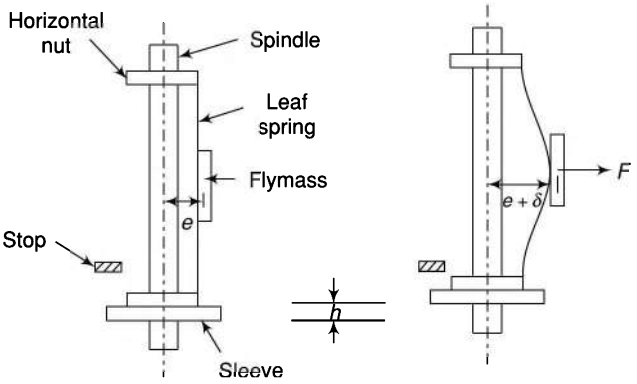

Fig. 16.17

Let m = mass fixed to each spring

e = distance between spindle axis and centre of mass when the governor is at rest

ω = Angular speed of the sleeve

δ = deflection of the centre of the leaf spring for spindle speed ω

Centrifugal force, $F = m(e + \delta)\omega^2$

To find δ, the leaf spring is treated as a beam of uniform cross section fixed at both ends and carrying a load at the centre.

$$\delta = \frac{Fl^3}{192EI} = \frac{m(e+\delta)\omega^2 l^3}{192EI}$$

where

E = modulus of elasticity of the spring material

I = moment of inertia of the cross-section of the spring about neutral axis = $\frac{bt^3}{12}$, b and t being the width and the thickness of the leaf spring.

An empirical relation to between the deflection δ and the lift h of the sleeve may also be used as follows:

$$h = 2.4\frac{\delta^2}{l}$$

A Pickering governor is used in gramophones to adjust the speed of the turn table.

Example 16.14 *Each spring of a Pickering governor of a gramophone is 6 mm wide and 0.12 mm thick with a length of 48 mm. A mass of 25 g is attached to each leaf spring at the centre. The distance between the spindle axis and the centre of mass when the governor is at rest is 8 mm. The ratio of the governor speed to the turn table speed is 10. Determine the speed of the turn table for a sleeve lift of 0.6 mm. Take E = 200 GN/m².*

Solution

m = 0.025 kg $\qquad$ b = 0.006 m

$e = 0.008$ m $\quad t = 0.000\,12$ mm
$h = 0.6$ mm $\quad l = 48$ mm
$E = 200 \times 10^9$ N/m^2

$$I = \frac{bt^3}{12} = \frac{0.006 \times 0.000\,12^3}{12} = 0.864 \times 10^{-15}\,\text{m}^4$$

Lift of the sleeve, $h = 2.4\dfrac{\delta^2}{l}$

or $\quad 0.6 = 2.4\dfrac{\delta^2}{48}$

or $\quad \delta = 3.464$ mm $= 0.003\,464$ m

Now,

$$\delta = \frac{Fl^3}{192EI} = \frac{m(e+\delta)\omega^2 l^3}{192EI}$$

$$0.003464 = \frac{0.025(0.008 + 0.003\,464)\omega^2 \times 0.048^3}{192 \times 200 \times 10^9 \times 0.864 \times 10^{-15}}$$

$\omega^2 = 3626$

or $\quad \omega = 60.22$ rad/s

$$= \frac{60.22 \times 60}{2\pi} = 575 \text{ rpm}$$

Therefore, speed of the turn table $= \dfrac{575}{10} = 57.5$ rpm

16.9 SPRING-CONTROLLED GRAVITY GOVERNOR

In a spring-controlled gravity governor, two bell-crank levers are pivoted on the moving sleeve [Fig.16.18(a)]. The rollers at the ends of the horizontal arms of the levers press against a cap fixed to the governor shaft. Thus, the motion of the pivots will be vertically upwards whereas the rollers will be able to move horizontally over the cap. As the speed increases, the balls move away, the pivots are raised and the spring is compressed between the sleeve and the cap.

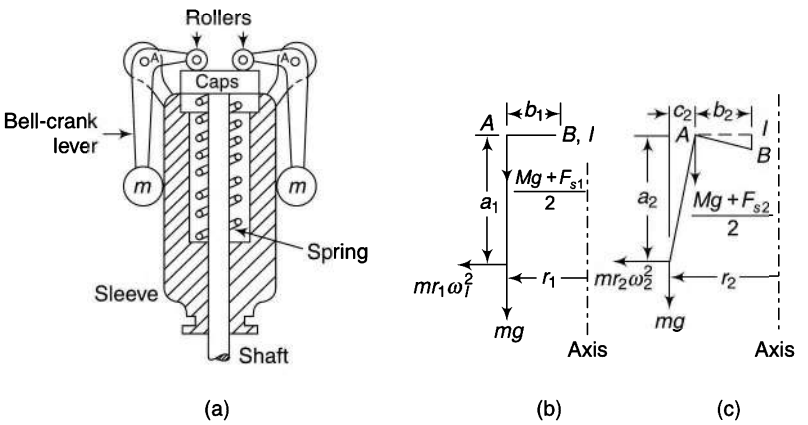

Fig. 16.18

Example 16.15 *In a spring-controlled gravity governor, the mass of each ball is 1.6 kg. The distance of fulcrum from the axis of rotation is 60 mm. The bell-crank lever has a 120 mm long vertical arm and a 50-mm long horizontal arm. The mass of the sleeve is 6.5 kg. The sleeve begins to rise at 200 rpm and the rise of sleeve for 5% increase is 9 mm. Determine the initial thrust in the spring and its stiffness.*

Solution

$m = 1.6$ kg $\quad N_1 = 200$ rpm
$M = 6.5$ kg $\quad a = a_1 = 200$ mm

$r_1 = 60$ mm $\quad b = b_1 = 50$ mm

$$\omega_1 = \frac{2\pi \times 200}{60} = 20.94 \text{ rad/s}$$

(i) For initial (neutral) position, taking moments about B, the I-centre [Fig.16.18(b)],

$$mr_1\omega_1^2 a_1 = mg\,b_1 + \frac{Mg + F_{s1}}{2} b_1$$

where F_{s1} is the spring load on the sleeve. The total sleeve load $(Mg + F_{s1})$ acts on the levers through the fulcrums $A - A$.
Thus,

$$\left[1.60 \times 0.06 \times (20.94)^2\right] \times 0.12$$

$$= \left[1.6 \times 9.891 + \frac{6.5 \times 9.81 + F_{S1}}{2}\right] \times 0.05$$

$\therefore$ initial thrust, F_{s1} = 107 N

(ii) When the sleeve rises through 9 mm, the radius is increased by c_2 [Fig.16.18(c)],

$$c_2 = 9 \times \frac{120}{50} = 21.6 \text{ mm}$$

or $r_2 = 60 + 21.6 = 81.6$ mm

$\omega_2 = 20.94 \times 1.05 = 21.99$ rad/s

$$a_2 = \sqrt{a^2 - c_2^2} = \sqrt{(120)^2 - (21.6)^2}$$

$= 118$ mm

$$b_2 = \sqrt{(50)^2 - (9)^2} = 49.2 \text{ mm}$$

Since the point A can move vertically and the point B horizontally, the I-centre of the lever BAC will be at I. Taking moments about this point,

$$(mr_2\omega_2^2)a_2 = mg\,(b_2 + c_2) + \frac{Mg + F_{s2}}{2} b_2$$

$$1.6 \times 0.0816 \times (21.99)^2 \times 0.118 = 1.6 \times 9.81$$

$$(0.0492 + 0.0216) + \frac{6.5 \times 9.81 + F_{s2}}{2} \times 0.0492$$

$F_{s2} = 193.8$ N

Stiffness of spring

$$= \frac{F_{s2} - F_{s1}}{h_2} = \frac{193.8 - 107}{9} = \underline{9.6 \text{ N/mm}}$$

16.10. INERTIA GOVERNOR

As described earlier, an inertia governor is based on the principle of inertia of matter and is operated by the acceleration or deceleration of the rotating masses in addition to centrifugal forces.

In this type of governor, a mass m, having its centre at G, is fixed to an arm QG which is pivoted to a rotating disc on the engine shaft at Q. The points Q, G and the centre of rotation O are not to be collinear (Fig.16.19). The arm QG is connected to an eccentric that operates the fuel supply valve. Whenever the arm moves relatively to the disc, it shifts the position of the eccentric which changes the fuel supply.

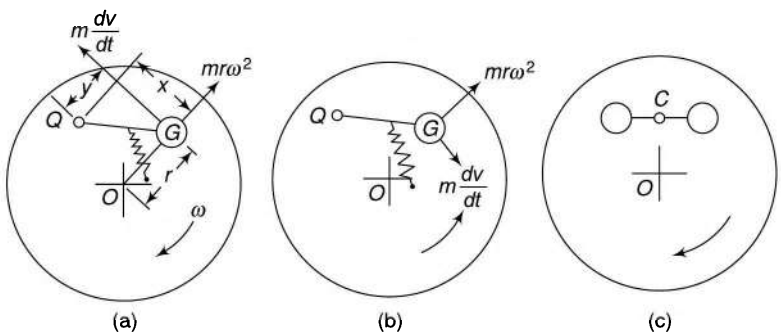

Fig. 16.19

Let r = radial distance OG

ω = angular velocity of the disc

v = tangential velocity of G ($= \omega r$)

Centrifugal force of the rotating mass, $F = mr\omega_2$ (radially outwards)

If the engine shaft is accelerated due to increase in speed, the ball mass does not get accelerated at the same amount on account of its inertia, the inertia force being equal to

$$F_i = mf = m\frac{dv}{dt}$$

Moment of F about $Q = mr\omega^2 x$ (counter-clockwise)

Moment of F_i about $Q = m\dfrac{dv}{dt} y$ (counter-clockwise)

Thus, it is seen that the moments due to the two forces add together to make the governor action rapid. Note that, as the mass moves outwards, the arm rotates in a direction opposite to that of the rotation of the shaft. In case- the arm is arranged on the disc in a manner shown in Fig.16.19(b), the two moments due of F and F_i act in the opposite directions to make the governor action sluggish. This arrangement is, therefore, avoided.

It is also possible to use ball masses fixed to the arm as shown in Fig.16.19(c). The arm is pivoted at its midpoint C. A change in the angular speed of the disc makes the ball masses to have an angular movement about C. If I_c is the moment of inertia of the arm and the masses about an axis through C, then

torque on the arm = $I_c\, d\omega/dt$

Note that in an inertia governor, when the acceleration (or deceleration) is very small or the change in velocity is very slow, the additional inertia force is practically zero and an inertia governor in effect, becomes a centrifugal governor.

Example 16.16 *Figure 16.20 shows the arrangement of an inertia governor. The disc rotates about the centre O. Two arms of negligible masses are pivoted at A and B which are 80 mm apart. Each arm has a mass of 300 g attached at the other end as shown in the figure. The distance of the centre of each mass from the respective pivot is 60 mm. Points C and D on the arms at 25 mm from the pivots are connected by a spring. It is ensured by a linkage that the angles θ_1 and θ_2 remain equal. The spring stiffness is 4 N/mm. Determine the*

(i) tension in the spring when each angle, i.e., θ_1 and θ_2 is 30° and the speed is 210 rpm

(ii) speed of rotation when rotating in the counter-clockwise direction the governor accelerates at a rate of 40 rad/s², each angle becomes 45°

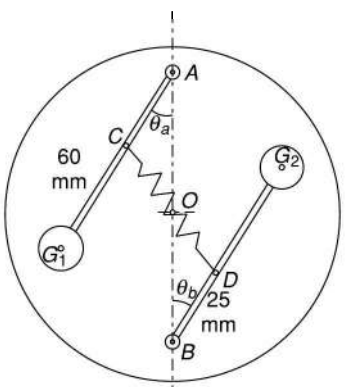

Fig. 16.20

Solution As the arrangement is symmetrical, forces on only one half may be considered for the equilibrium purposes.

(i) Draw the configuration to scale as shown in Fig. 16.21(a) for each angle of 30°.

$$\omega = \frac{2\pi \times 210}{60} = 22 \text{ rad/s}$$

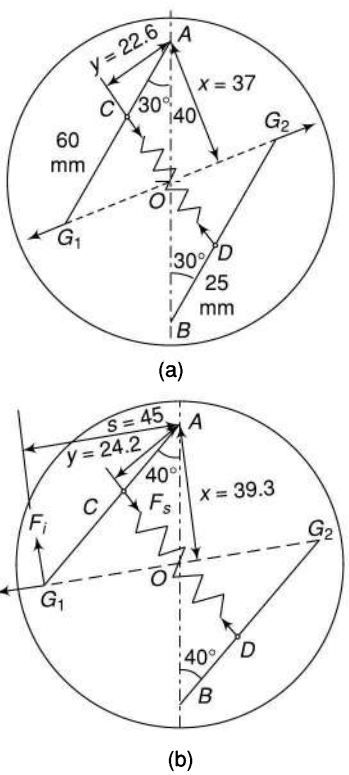

Fig. 16.21

On measurement, the perpendicular distance of the centrifugal force, $x = 37$ mm

And the perpendicular distance of the spring force, $y = 22.6$ mm

$OG_1 = 32.3$ mm

Centrifugal force $F = mr\omega^2$

$= 0.3 \times 0.0323 \times 22^2 = 4.69$ N

Taking moments about the pivot A,

$F \times x = F_s \times y$

or $4.69 \times 37 = F_s \times 22.6$

or $F_s = 7.68$ N

(ii) Draw the configuration to scale as shown in Fig. 16.21b for each angle of 40°.

On measurement, the perpendicular distance of the centrifugal force, $x = 39.3$ mm and the perpendicular distance of the spring force, $y = 24.2$ mm

$\perp$ distance of F_i, $s = 45$ mm

$OG_1 = 39$ mm

Elongation of spring = 53.05 – 45.15 = 7.9 mm

Centrifugal force $F = mr\omega^2 = 0.3 \times 0.039 \times \omega^2$

$= 0.0117\ \omega^2$ N

Inertia force, F_i = mass × tangential acceleration

$= 0.3 \times (40 \times 0.39)$

$= 4.68$ N

Spring force = Initial force + Stiffness × Elongation

$= 7.68 + 4 \times 7.9$

$= 39.28$ N

Taking moments about the pivot A,

$F \times x + F_i \times s = F_s \times y$

or $0.0117\ \omega_2 \times 39.3 + 4.68 \times 45 = 39.28 \times 24.2$

or $\omega_2 = 1609.3$

$\omega = 40.1$ rad/s

$$\frac{2\pi N}{60} = 40.1$$

$N = 383$ rpm

16.11 SENSITIVENESS OF A GOVERNOR

A governor is said to be sensitive when it readily responds to a small change of speed. The movement of the sleeve for a fractional change of speed is the measure of sensitivity.

As a governor is used to limit the change of speed of the engine between minimum to full-load conditions, the sensitiveness of a governor is also defined as the ratio of the difference between the maximum and the minimum speeds (range of speed) to the mean equilibrium speed. Thus,

$$\text{Sensitiveness} = \frac{\text{range of speed}}{\text{mean speed}}$$

$$= \frac{N_2 - N_1}{N}$$

$$= \frac{2(N_2 - N_1)}{N_1 + N_2} \tag{16.10}$$

When N = mean speed

N_1 = minimum speed corresponding to full load conditions

N_2 = maximum speed corresponding to no-load conditions

16.12 HUNTING

Sensitiveness of a governor is a desirable quality. However, if a governor is too sensitive, it may fluctuate continuously, because when the load on the engine falls, the sleeve rises rapidly to a maximum position. This shuts off the fuel supply to the extent to affect a sudden fall in the speed. As the speed falls to below the mean value, the sleeve again moves rapidly and falls to a minimum position to increase the fuel supply. The speed

subsequently rises and becomes more than the average with the result that the sleeve again rises to reduce the fuel supply. This process continues and is known as *hunting*.

16.13 ISOCHRONISM

A governor with a range of speed zero is known as an *isochronous governor*. This means that for all positions of the sleeve or the balls, the governor has the same equilibrium speed. Any change of speed results in moving the balls and the sleeve to their extreme positions. However, an isochronous governor is not practical due to friction at the sleeve.

For a Porter governor, with all arms equal in length and intersecting on the axis (neglecting friction),

$$h_1 = \frac{g}{\omega_1^2}\left(1+\frac{M}{m}\right) \text{ and } h_2 = \frac{g}{\omega_2^2}\left(1+\frac{M}{m}\right)$$

For isochronism, $\omega_1 = \omega_2$ and thus $h_1 = h_2$. However, from the configuration of a Porter governor, it can be judged that it is impossible to have two positions of the balls at the same speed. Thus, a pendulum type of governor cannot possibly be isochronous.

In the case of a Hartnell governor (neglecting friction),

At ω_1,

$$mr_1\omega_1^2 a = \frac{1}{2}(Mg + F_{s1})b$$

At ω_2,

$$mr_2\omega_2^2 a = \frac{1}{2}(Mg + F_{s2})b$$

For isochronism, $\omega_1 = \omega_2$.

$$\therefore \qquad \frac{Mg + F_{s1}}{Mg + F_{s2}} = \frac{r_1}{r_2} \tag{16.11}$$

which is the required condition of iscohronism.

16.14 STABILITY

A governor is said to be stable if it brings the speed of the engine to the required value and there is not much hunting. The ball masses occupy a definite position for each speed of the engine within the working range.

Obviously, the stability and the sensitivity are two opposite characteristics.

16.15 EFFORT OF A GOVERNOR

The effort of the governor is the mean force acting on the sleeve to raise or lower it for a given change of speed. At constant speed, the governor is in equilibrium and the resultant force acting on the sleeve is zero. However, when the speed of the governor increases or decreases, a force is exerted on the sleeve which tends to move it. When the sleeve occupies a new steady position, the resultant force acting on it again becomes zero.

If the force acting at the sleeve changes gradually from zero (when the governor is in the equilibrium position) to a value E for an increased speed of the governor, the mean force or the effort is $E/2$.

For a Porter governor, the height is given by

$$h = \frac{g}{\omega^2} + \frac{Mg(1+k)}{2m\omega^2} = \frac{2mg + Mg(1+k)}{2m\omega^2} \tag{i}$$

Let ω be increased by c times ω where c is a factor and E be the force applied on the sleeve to prevent it from moving. Thus, the force on the sleeve is increased to $(Mg + E)$. Then

$$h = \frac{2mg + (Mg + E)(1+k)}{2m(1+c)^2\omega^2} \tag{ii}$$

Dividing (ii) by (i),

$$\frac{2mg + (Mg + E)(1+k)}{2mg + Mg(1+k)} = \frac{(1+c)^2}{1}$$

or

$$\frac{[2mg + (Mg + E)(1+k)] - [2mg + Mg(1+k)]}{2mg + Mg(1+k)} = \frac{1 + c^2 + 2c - 1}{1}$$

c^2 being a small quantity is usually neglected.

$$\frac{E(1+k)}{2mg + Mg(1+k)} = 2c$$

or

$$E = \frac{2c}{(1+k)}[2mg + Mg(1+k)]$$

Effort
$$\frac{E}{2} = \frac{cg}{1+k}[2m + M(1+k)] \tag{16.12}$$

- If $k = 1$,

  Effort,
  $$\frac{E}{2} = (m + M)cg \tag{16.13}$$

- If friction of the sleeve is considered,

  Effort,
  $$\frac{E}{2} = (mg + Mg + f)c$$

- For a Watt governor, $M = 0$,

  Effort,
  $$\frac{E}{2} = cmg \tag{16.14}$$

  Thus, the effort of a Watt governor is less than that of a Porter governor.

- Sometimes effort is defined as the force required to be applied for 1% change in speed, i.e.,

  Effort $= (m + M)cg = 0.01\,(m + M)\,g$

  In a Hartnell governor,

  $$mr\omega^2 a = \frac{1}{2}(Mg + F_s)b \tag{iii}$$

  Let E be the force applied on the sleeve to prevent its movement when the speed changes from ω to $c\omega$.

  $$mr(1+c)^2\omega^2 a = \frac{1}{2}(Mg + E + F_s)b \tag{iv}$$

Dividing (iii) by (iv),

$$\frac{1}{(1+c)^2} = \frac{Mg + F_s}{Mg + E + F_s}$$

or

$$\frac{Mg + E + F_s}{Mg + F_s} = (1+c)^2$$

or

$$\frac{E}{Mg + F_s} = 1 + c^2 + 2c - 1 = 2c \qquad \text{(neglecting } c^2\text{)}$$

or Effort,

$$\frac{E}{2} = c(Mg + F_s) \qquad (16.15)$$

16.16 POWER OF A GOVERNOR

The power of a governor is the work done at the sleeve for a given percentage change of speed, i.e., it is the product of the effort and the displacement of the sleeve.

For a Porter governor, having all equal arms which intersect on the axis or pivoted at points equidistant from the spindle axis,

$$\text{power} = \frac{E}{2} \times (2 \times \text{height of governor})$$

If the height of the governor changes from h to h_1 when the speed changes from ω to $(1 + c)\omega$,

$$h = \frac{2m + Mg(1+k)}{2m\omega^2} \quad \text{and} \quad h_1 = \frac{2m + Mg(1+k)}{2m(1+c)^2\omega^2}$$

or

$$\frac{h_1}{h} = \frac{1}{(1+c)^2}$$

$\therefore$ displacement of sleeve = 2 $(h - h_1)$

$$= 2h\left(1 - \frac{h_1}{h}\right)$$

$$= 2h\left(1 - \frac{1}{(1+c)^2}\right)$$

$$= 2h\left(1 - \frac{1}{1+2c}\right) \qquad \text{(neglecting } c^2\text{)}$$

$$= 2h\left(\frac{2c}{1+2c}\right)$$

$$\text{Power} = (m + M)cg \times 2h\left(\frac{2c}{1+2c}\right)$$

$$= (m + M)gh\left(\frac{4c^2}{1+2c}\right) \qquad (16.16)$$

In case $k \neq 1$,

displacement of sleeve $\approx (1 + k)(h - h_1) \approx (1 + k)\, h\left(\dfrac{2c}{1+2c}\right)$

and thus power $= \dfrac{cg}{1+k}[2m + M(1+k)] \times (1+k)h\left(\dfrac{2c}{1+2c}\right)$

$$= \left[m + \frac{M}{2}(1+k)\right] gh\left(\frac{4c^2}{1+2c}\right)$$

Example 16.17 *Each ball of a Porter governor has a mass of 3 kg and the mass of the sleeve is 15 kg. The governor has equal arms, each of 200-mm length and pivoted on the axis of rotation. When the radius of rotation of the balls is 120 mm, the sleeve begins to rise up 160 mm at the maximum speed. Determine the*

(i) range of speed
(ii) lift of the sleeve
(iii) effort of the governor
(iv) power of the governor

What will be the effect of friction at the sleeve if it is equivalent to 8 N?

Solution

Refer Fig. 16.22.

$h_1 = \sqrt{0.2^2 - 0.12^2} = 0.16$ m

$h_1 = \sqrt{0.2^2 - 0.16^2} = 0.12$ m

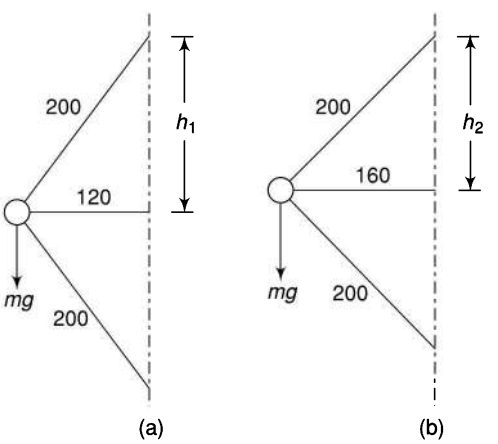

Fig. 16.22

$$N_1^2 = \frac{895}{h_1}\left(\frac{m+M}{m}\right) = \frac{895}{0.16}\left(\frac{3+15}{3}\right) = 33\,563$$

$N_1 = 183.2$ rpm

And

$$N_2^2 = \frac{895}{0.12}\left(\frac{3+15}{3}\right) = 44750 \text{ or } N_2 = 212.5 \text{ rpm}$$

or $N_2 = 212.5$ rpm

(i) Range of speed = 212.5 – 183.2 = 29.3 rpm

(ii) Lift of sleeve = 2 $(h_1 - h_2)$ = 2(0.16 – 0.12) = 0.08 m

(iii) Effort = $(m + M)cg$
where $c\,N$ = (212.5 – 183.2) = 29.2
or c = 29.2/183.2 =0.16
or Effort = (3 + 15) × 0.16 × 9.81 = 28.3 N

(iv) Power $= (m+M)gh\left(\dfrac{4c^2}{1+2c}\right)$

$$= (3+15) \times 9.81 \times 0.16\left(\frac{4 \times 0.16^2}{1+2 \times 0.16}\right)$$

= 2.26 N.m

or Power = Effort × Displacement
= 28.3 × 0.08 = 2.19 N.m

(The difference in the two values is due to the approximations taken in the derivation of relations.)

When friction is considered

$$N_1^2 = \frac{895}{h_1}\left(\frac{mg + (Mg - f)}{mg}\right)$$

$$= \frac{895}{0.16}\left(\frac{3 \times 9.81 + (15 \times 9.81 - 8)}{3 \times 9.81}\right)$$

= 32 042

N_1 = 179 rpm

$$N_2^2 = \frac{895}{h_2}\left(\frac{mg + (Mg + f)}{mg}\right)$$

$$= \frac{895}{0.12}\left(\frac{3 \times 9.81 + (15 \times 9.81 + 8)}{3 \times 9.81}\right)$$

$= 46\ 777$

$N_2 = 216.3$ rpm

(iv) Range of speed = 216.3 – 179 = 37.3 rpm

(v) Lift of sleeve = Same as before = 0.08 m

Effort = $(mg + Mg + f)c$

where $c = 37.3/179 = 0.208$

or Effort = $(3 \times 9.81 + 15 \times 9.81 + 8) \times 0.208$

= 38.4 N

(vi) Power = Effort × Displacement

= 38.4 × 0.08 = 3.07 N.m

Example 16.18 *Each ball of a Porter governor has a mass of 6 kg and the mass of the sleeve is 40 kg. The upper arms are 300 mm long and are pivoted in the axis of rotation whereas the lower arms are 250 mm long and are attached to the sleeve at a distance of 40 mm from the axis. Determine the equilibrium speed of the governor for a radius of rotation of 150 mm for 1% change in speed. Also, find the effort and the power for the same speed change.*

Solution Refer Fig. 16.23

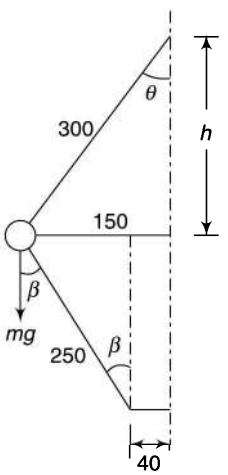

Fig. 16.23

$$h = \sqrt{0.3^2 - 0.15^2} = 0.26 \text{ m}$$

$$\sin\beta = \frac{150 - 40}{250} = 0.44 \text{ or } \omega = 26.1^\circ$$

$$\therefore \sin\theta = \frac{150}{300} = 0.5 \text{ or } \beta = 30^\circ$$

$$k = \frac{\tan\beta}{\tan\theta} = \frac{\tan 26.1^\circ}{\tan 30^\circ} = 0.849$$

$h = 0.3 \cos 30^\circ = 0.26$ m

$$N^2 = \frac{895}{h}\left(\frac{2m + M(1+k)}{2m}\right)$$

$$= \frac{895}{0.26}\left(\frac{2 \times 6 + 40(1 + 0.849)}{2 \times 6}\right)$$

$= 24\ 658$

$N = 157$ rpm

$$\text{Effort} = \frac{cg}{1+k}[2m + M(1+k)]$$

$$= \frac{0.01 \times 9.81}{1 + 0.849}[2 \times 6 + 40(1 + 0.849)]$$

= 4.56 N

$$\text{Power} = \left[m + \frac{M}{2}(1+k)\right]gh\left(\frac{4c^2}{1+2c}\right)$$

$$= \left[6 + \frac{40}{2}(1 + 0.849)\right] \times 9.81 \times 0.26\left(\frac{4 \times 0.01^2}{1 + 2 \times 0.01}\right)$$

$= 42.98 \times 2.55 \times 0.000\ 392$

= 0.043 N.m or 43 N.mm

Example 14.19 *In a Hartnell governor, the radius of rotation of the balls is 60 mm at the minimum speed of 240 rpm. The length of the ball arm is 130 mm and the sleeve arm is 80 mm. The mass of each ball is 3 kg and the sleeve is 4 kg. The stiffness of the spring is 20 N/mm. Determine the*

(i) speed when the sleeve is lifted by 50 mm

(ii) initial compression of the spring

(iii) governor effort

(iv) power

Solution Refer Fig. 16.24.

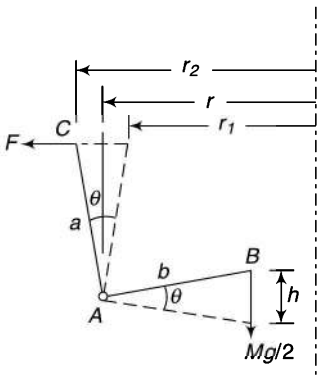

Fig. 16.24

$a = 130$ mm $\quad b = 80$ mm
$h = 50$ mm $\quad r_1 = 60$ mm
$N_1 = 240$ rpm $\quad s = 20\,000$ N/m
$m = 3$ kg $\quad M = 4$ kg

$$\omega = \frac{2\pi \times 240}{60} = 8\pi$$

$$\frac{r_2 - r_1}{a} = \theta = \frac{h}{b} \text{ or } r_2 = r_1 + \frac{ah}{b}$$

$$= 60 + \frac{130 \times 50}{80} = 141 \text{ mm}$$

(i) $s = 2 \times \frac{a^2}{b^2}\left(\frac{F_2 - F_1}{r_2 - r_1}\right)$

Now, $F_1 = mr_1\omega_1^2 = 3 \times 0.06 \times (8\pi)^2 = 113.7$ N

or $20\,000 = 2 \times \frac{0.13^2}{0.08^2}\left(\frac{F_2 - 113.7}{0.141 - 0.06}\right)$

$F_2 = 113.7 + 306.7 = 420.4$ N

$$3 \times 0.141 \times \left(\frac{2\pi \times N_2}{60}\right)^2 = 420.4$$

$N_2^2 = 90\,638$
$N_2 = 301$ rpm

(ii) $mr_1\omega_1^2 a = \frac{1}{2}(Mg + F_{s1})b$

$3 \times 0.06 \times (8\pi)^2 \times 0.13 =$

$\frac{1}{2}(4 \times 9.81 + F_{s1}) \times 0.08$

$F_{s1} = 330.3$ N

Initial compression $\frac{330.3}{20\,000} = 0.0165$ m = 16.5 m

(iii) Governor effort is also the average force applied on the spring.

Effort $= \frac{20\,000 \times 0.05}{2} = 500$ N

(iv) Power = effort × displacement = 500 × 0.05 = 25 N.m

Example 16.20 *The lengths of the ball and sleeve arms of the bell crank lever of a Hartnell governor are 140 and 120 mm respectively. The mass of each governor ball is 5 kg. The fulcrum of the bell-crank lever is at a distance of 160 mm. At the mean speed of the governor which is 270 rpm, the ball arms are vertical and the sleeve arms are horizontal. The sleeve moves up by 12 mm for an increase of speed of 4%. Neglecting friction, determine the*

(i) spring stiffness
(ii) minimum equilibrium speed when the sleeve moves by 24 mm
(iii) sensitiveness of the governor
(iv) spring stiffness for the governor to be isochronous at the mean speed

Solution Refer Fig. 16.25.

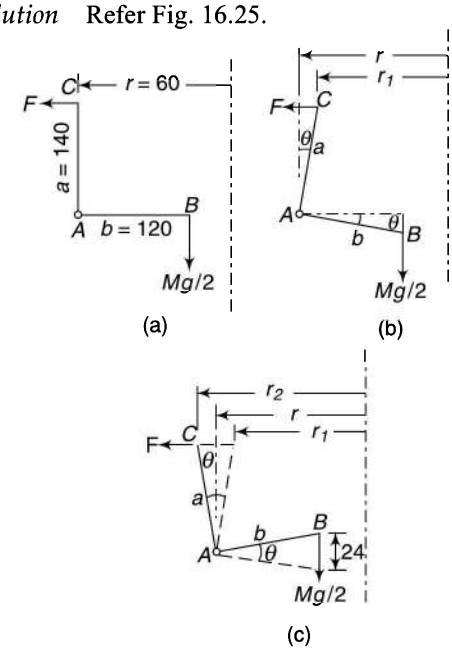

Fig. 16.25

$a = 140$ mm $\quad b = 120$ mm
$h = 24$ mm $\quad r = 160$ mm
$N = 270$ rpm $\quad m = 5$ kg

$$\omega = \frac{2\pi \times 270}{60} = 9\pi \text{ rad/s}$$

$N_2 = 1.04 \times 270 = 280.8$ rpm
$\omega_2 = 1.04 \times 9\pi = 9.36\pi$ rad/s

$$\frac{r - r_1}{a} = \theta = \frac{h}{b} \quad \text{or} \quad r_1 = r - \frac{ah}{b}$$

$$= 160 - \frac{140 \times 12}{120} = 146 \text{ mm}$$

$$\frac{r - r_1}{a} = \theta = \frac{h}{b} \quad \text{or} \quad r_2 = r_1 + \frac{ah}{b}$$

$$= 146 + \frac{140 \times 24}{120} = 174 \text{ mm}$$

$F = mr\omega^2 = 5 \times 0.16 \times (9\pi)^2 = 639.6$ N
$F_2 = mr_2\omega_2^2 = 5 \times 0.174 \times (9.36\pi)^2 = 752.3$ N

(i) $$s = 2 \times \frac{a^2}{b^2}\left(\frac{F_2 - F}{r_2 - r}\right)$$

or $$s = 2 \times \frac{0.14^2}{0.12^2}\left(\frac{752.3 - 639.6}{0.174 - 0.16}\right)$$

$= 21\,914$ N/m or 21.914 N/mm

(ii) $$s = 2 \times \frac{a^2}{b^2}\left(\frac{F_2 - F_1}{r_2 - r_1}\right)$$

$$21\,914 = 2 \times \frac{0.14^2}{0.12^2}\left(\frac{752.3 - F_1}{0.174 - 0.146}\right)$$

$F_1 = 752.3 - 225.4 = 526.9$ N

$$5 \times 0.146 \times \left(\frac{2\pi \times N_1}{60}\right)^2 = 526.9$$

$N_1^2 = 65\,818$
$N_1 = 256.6$ rpm

(iii) Sensitiveness

$$= 2\frac{N_2 - N_1}{N_2 + N_1} = 2 \times \frac{280.8 - 256}{280.8 + 256} = 0.09 \text{ or } 9\%$$

(iv) For isochronous governor at 270 rpm,

$F_1 = mr_1\omega^2 = 5 \times 0.146 \times (9\pi)^2 = 583.6$ N
$F_2 = mr_2\omega^2 = 5 \times 0.174 \times (9\pi)^2 = 695.5$ N

$$s = 2 \times \frac{0.14^2}{0.12^2}\left(\frac{695.5 - 583.6}{0.174 - 0.146}\right) = 10\,880 \text{ N/m}$$

or 10.88 N/mm

16.17 CONTROLLING FORCE

When the balls of a governor rotate in their circular path, the centrifugal force on each ball tends to move it outwards. This is resisted by an equal and opposite force acting radially inwards and is known as the controlling force.

The controlling force is supplied by the weight of the rotating mass in a Watt governor, the weight of the mass and that of the sleeve in a Porter governor and by the compressed spring in the case of a Hartnell governor.

A graph showing the variation of the controlling force with the radius of rotation is called the controlling curve or diagram. This curve is useful in finding out the stability of a governor discussed below.

$$\text{Controlling force} = \tan\theta\left[mg + \frac{Mg \pm f}{2}(1 + k)\right] \quad \text{for a Porter governor}$$

$$= \frac{1}{2}(Mg + F_s \pm f)\frac{b}{a} \quad \text{for a Hartnell governor}$$

From the above relations, the values of the controlling force may be calculated for different radii of the ball. Figure 16.26(a) shows AB as the controlling force curve (neglecting friction) plotted against the ball radius. Alternatively, as the controlling force is equal and opposite to the centrifugal force, it may be computed from the relation $F = mr\omega^2$ for different radii and the corresponding speeds. This relation also indicates that for a particular speed, the controlling force is proportional to the radius. Thus a number of lines, such as OC,

OC_1, OC_2, etc., may be drawn on the diagram providing the values of controlling does for different radii at particular speeds. The intersection of the speed curves with the controlling force curve provides the speeds of the governor corresponding to the radii.

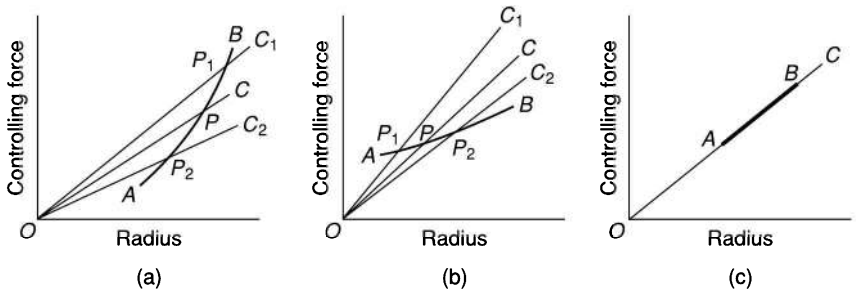

Fig. 16.26

Suppose that the point P represents the mean speed of the governor. r is the corresponding radius of the balls. Now, if the speed increases to P_1 the radius of the balls increases to r_1, thus moving the sleeve up and closing the throttle valve to the require extent. Similarly, if the speed decreases to the point P_2, the radius of the balls decreases to r_2, resulting in the lowering of the sleeve and opening the throttle valve further. This would increase the speed. This type of governor is said to be stable.

Now consider a controlling force curve of the type shown in Fig. 16.26(b). In this case, the point P again represents the mean speed of the governor. If the speed increases to P_1, the radius of the balls decreases to r_1. This means that the sleeve is lowered and the throttle valve is further opened to increase the fuel supply and consequently increasing the speed. Similarly, on decreasing the speed, the sleeve is moved up, closing the valve and thus further reducing the speed. Such a governor is therefore unstable.

Thus, for a governor to be stable the slope of the controlling force curve must be greater than that of the speed curve.

Figure 16.26(c) shows a controlling force curve AB which sometimes may be obtained in some spring-loaded governor by suitable adjustments. It can be observed that, at the speed represented by the line OC, the balls can take up any radius. Under such conditions, the governor is said to be isochronous.

If friction is taken into account, two more curves of the controlling force are obtained as shown in Fig.16.27. Thus, in all, three curves of the controlling force are obtained as follows:

(i) For steady run (neglecting friction)
(ii) While the sleeve moves up (f positive)
(iii) While the sleeve moves down (f negative)

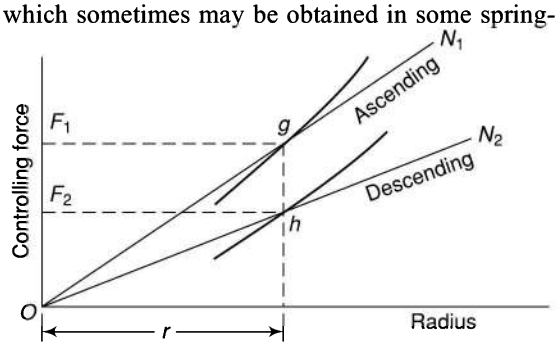

Fig. 16.27

The vertical intercept gh signifies that between the speeds corresponding to gh, the radius of the balls does not change while the direction of movement of the sleeve does. In other words, between speeds N_1 and N_2, the governor is insensitive. At all radii of the balls within the range, there are two speeds for no change of the radius.

Coefficient of Insensitiveness $\dfrac{N_1 - N_2}{N}$ is known as the coefficient of insensitiveness where N is the corresponding speed neglecting friction.

Example 16.21 *Each arm of a Porter governor is 180 mm long and is pivoted on the axis of rotation. The mass of each ball is 4 kg and the sleeve is 18 kg. The radius of rotation of the balls is 100 mm when the sleeve begins to rise and 140 mm when at the top. Determine the range of speed. Also, find the coefficient of insensitiveness if the friction at the sleeve is 15 N.*

Solution Refer Fig. 16.28

$r_1 = 100$ mm

$h_1 = \sqrt{0.18^2 - 0.1^2} = 0.1497$ m

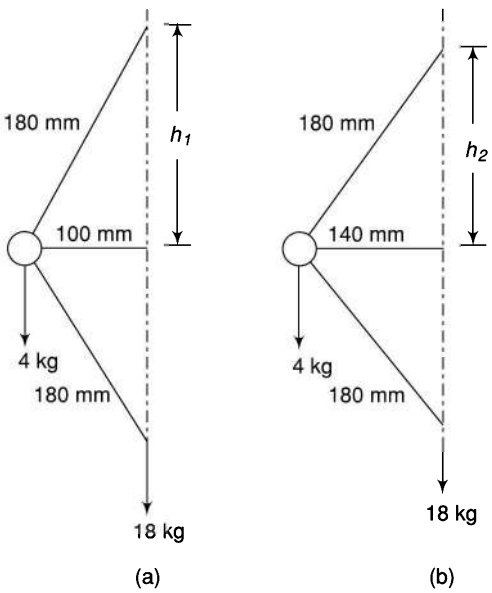

Fig. 16.28

$$N_1^2 = \frac{895}{h_1}\left(\frac{m+M}{m}\right) = \frac{895}{0.1497}\left(\frac{4+18}{4}\right)$$

$= 32\ 882$

$N_1 = 181.3$ rpm

$r_2 = 140$ mm

$h_2 = \sqrt{0.18^2 - 0.14^2} = 0.1131$ m

and $\quad N_2^2 = \dfrac{895}{0.1131}\left(\dfrac{4+18}{4}\right) = 43\ 523$

or $\quad N_2 = 208.6$ rpm

Range of speed = 208.6 – 181.3 = 27.3 rpm

Coefficient of insensitiveness

$$= \frac{N_1 - N_2}{N}$$

$$= \frac{(N_1 - N_2)}{N}\frac{(N_1 + N_2)}{(N_1 + N_2)} = \frac{(N_1^2 - N_1^2)}{2N[(N_1 + N_2)/2]}$$

$$= \frac{(N_1^2 - N_1^2)}{2N^2}$$

$$\frac{\dfrac{895}{h}\left(\dfrac{mg + (Mg + f)}{mg}\right) - \dfrac{895}{h}\left(\dfrac{mg + (Mg - f)}{mg}\right)}{\dfrac{895}{h}\left(\dfrac{m+M}{m}\right)}$$

$$= \frac{f}{(m+M)g} = \frac{15}{(4+18)\times 9.81}$$

= 0.695 or 6.95%

Example 16.22 *In a Proell governor the mass of each ball is 8 kg and the mass of the sleeve is 120 kg. Each arm is 180 mm long. The length of extension of lower arms to which the balls are attached is 80 mm. The distance of pivots of arms from axis of rotation is 30 mm and the radius of rotation of the balls is 160 mm when the arms are inclined at 40° to the axis of rotation. Determine the*

(i) equilibrium speed

(ii) coefficient of insensitiveness if the friction of the mechanism is equivalent to 30 N

(iii) range of speed when the governor is inoperative

Solution Refer Fig. 16.29.

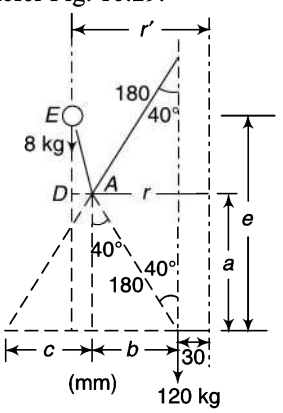

Fig. 16.29

$m = 8$ kg $\qquad r' = 160$ mm

$b = c = 180 \sin 40^\circ = 115.7$ mm

$r = b + 30 = 115.7 + 30 = 145.7$ mm

$a = 180 \cos 40^\circ = 137.9$ mm

$AD = r' - r = 160 - 145.7 = 14.3$ mm

$DE = \sqrt{80^2 - 14.3^2} = 78.7$ mm

$e = a + ED = 137.9 + 78.7 = 216.6$ mm

(i) Taking moments about I,

$$mr\,\omega^2 \times e = mg \times (c + r - r') + \frac{Mg}{2} \times (b + c)$$

$$8 \times 0.16 \times \omega^2 \times 0.2166 = 8 \times 9.81 \times (0.1157 + 0.1457 - 0.16)$$

$$+ \frac{120 \times 9.81}{2} \times (0.1157 + 0.1157)$$

$$0.2773\,\omega^2 = 7.958 + 136.2$$

$$\omega^2 = 519.9$$

$$\omega = 22.8 \text{ or } N = \frac{22.8 \times 30}{\pi} = 217.7 \text{ rpm}$$

(ii) Considering the friction, let ω_1 and ω_2 be the maximum and minimum speeds respectively.

$$8 \times 0.16 \times \omega_2^2 \times 0.2166 = 8 \times 9.81 \times (0.1157 + 0.1457 - 0.16)$$

$$+ \frac{120 \times 9.81 - 30}{2} \times (0.1157 + 0.1157)$$

$$0.2773\,\omega_2^2 = 7.958 + 132.7$$

$$\omega_2^2 = 507.4$$

$$\omega_2 = 22.52 \text{ or } N_2 = \frac{22.52 \times 30}{\pi} = 215.1 \text{ rpm}$$

$$0.2773\,\omega_1^2 = 7.958 + \frac{120 \times 9.81 + 30}{2} \times (0.1157 + 0.1157)$$

$$\omega_1^2 = 532.4$$

$$\omega_1^2 = 23.07 \text{ or } N_1 = \frac{23.07 \times 30}{\pi} = 220.3 \text{ rpm}$$

Coefficient of insensitiveness

$$= \frac{N_1 - N_2}{N} = \frac{220.3 - 215.1}{217.7}$$

$= 0.0239$ or 2.39%

(iii) Range of speed $= 220.3 - 215.1 = 5.2$ rpm

Example 16.23 *In a spring-controlled governor, the controlling force curve is a straight line. The balls are 400 mm apart when the controlling force is 1500 N and 240 mm when it is 800 N. The mass of each ball is 10 kg. Determine the speed at which the governor runs when the balls are 300 mm apart. By how much should the initial tension be increased to make the governor isochronous? Also, find the isochronous speed.*

Solution (i) The controlling force curve of a spring-controlling governor is a straight line and thus can be expressed as

$$F = ar + b$$

where $r = 200$ mm and $F = 1500$ N

$1500 = 0.2\,a + b$

When $r = 120$ mm, $\quad F = 800$ N $\qquad$ (i)

$800 = 0.12\,a + b$ $\qquad$ (ii)

From (i) and (ii),

$0.08a = 700$

or $\quad a = 8750$ and $b = -250$

$F = mr\omega^2 = ar + b$

When $r = \dfrac{300}{2} = 150$ mm,

$10 \times 0.15 \times \omega^2 = 8750 \times 0.15 + (-250)$

$\therefore\ \omega^2 = 708.3$

$$\omega = \frac{2\pi N}{60} = 26.6$$

$N = \underline{254.2 \text{ rpm}}$

(ii) To make the governor isochronous, the controlling force line must pass through the origin, i.e., b is to be zero. This is possible only if the initial tension is increased by 250 N (Refer to Fig.16.30).

(iii) $F = mr\omega^2 = ar + b$

$10 \times r \times \omega^2 = 8750\,r + 0$

$\therefore\ \omega^2 = 875$

$$\omega = \frac{2\pi N}{60} = 29.58$$

$N = \underline{282.5 \text{ rpm}}$

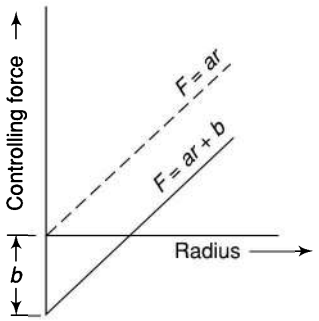

Fig. 16.30

Example 16.24 *In a Porter governor, each arm is 200 mm long and is pivoted at the axis of rotation. The mass of each ball is 5 kg and the load on the sleeve is 30 kg. The extreme radii of rotation are 80 mm and 140 mm. Plot a graph of the controlling force vs. radius of rotation and set off a speed scale along the ordinate corresponding to a radius of 160 mm.*

Solution Controlling force of a Porter governor,

$$F = \frac{r}{h}\left[mg + \frac{Mg \pm f}{2}(1+k)\right]$$

In this case, $k = 1$ and $f = 0$

$$\therefore \quad F = \frac{r}{h}(m+M)g = \frac{(m+M)g}{l^2 - r^2}r$$

We have $m = 5$ kg, $M = 30$ kg, $l = OA = 200$ mm

$$\therefore \; F = \frac{(5+30)\times 9.81}{\sqrt{(200)^2 - r^2}}r = 243.35 \times \frac{r}{\sqrt{(200)^2 - r^2}}$$

Prepare Table 16.1 for different values of r and the corresponding force.

The plot has been shown in Fig. 16.31.

To set off the speed scale,

$F = mr\omega^2$

We have $m = 5$ kg and $r = 160$ mm

$$F = 5 \times 0.160 \times \left(\frac{2\pi N}{60}\right)^2 = 0.008\ 77\ N^2$$

Now Table 16.2 can be prepared:

The speed scale can now be marked on the graph as shown in Fig.16.31.

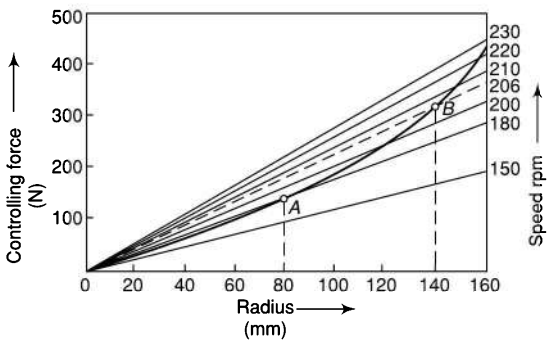

Fig. 16.31

To obtain the range of equilibrium speeds, draw vertical lines through r = 80 mm and 140 mm meeting the controlling force curve at A and B respectively. Draw straight lines from the origin and through points A and B correspond to speeds 150 and 190 rpm respectively.

The range of speed is from 180 to 206 rpm.

Table 16.1

r(mm)	20	40	60	80	100	120	140	160
F(N)	34.5	70	108	150	198	258	336	458

Table 16.2

N(rpm)	100	150	160	170	180	190	200	210	220	230
F(N)	87.7	197.3	224	253	284	317	351	387	425	464

Summary

1. The function of a governor is to maintain the speed of an engine within specified limits whenever there is variation of load.
2. The variation in the output torque of the engine during a cycle can be regulated by mounting a suitable flywheel on the shaft whereas the speed variation over a number of cycles due to load variation is regulated by governors which regulate the fuel supply according to the load.
3. The action of *centrifugal governors* depends upon the change in the centrifugal force of balls due to change in speed, and that of *inertia governors* on the acceleration or deceleration of spindle apart from change of centrifugal force.
4. The height of a *Watt governor* is inversely proportional to the square of the speed. At high speeds, the movement of the sleeve becomes very small and thus this type of governor is unsuitable for high speeds.
5. In a *Porter governor*, the sleeve is loaded with a heavy mass which improves the action of the governor.
6. Friction makes the governor inactive for a small range of speed on changing the direction of the sleeve movement.
7. In a *Proell governor*, the two balls are fixed on the upward extensions of the lower links which are in the form of bent links.
8. Further improvement in the action of governors is brought about by using springs. Spring controlled governors are *Hartnell, Hartung, Wilson Hartnell, gravity* and *Pickering*.
9. A *Wilson–Hartnell governor* uses two parallel springs alongwith an auxiliary spring.
10. A *Pickering governor* consists of three leaf springs which are arranged at equal angular intervals around the governor spindle.
11. A governor is said to be sensitive when it readily responds to a small change of speed. The movement of the sleeve for a fractional change of speed is the measure of *sensitivity.*
12. *Hunting* is the process of continuous fluctuating of sleeve for longer periods whenever there is change in speed. This happens if the governor is too sensitive.
13. A governor with a zero speed range is known as an *isochronous governor*. This means that for all positions of the sleeve or the balls, the governor has the same equilibrium speed.
14. A governor is said to be *stable* if it brings the speed of the engine to the required value without much hunting and for each speed there is only one radius of rotation of the balls.
15. The *effort* of the governor is the mean force acting on the sleeve to raise or lower it for a given change of speed.
16. The *power* of a governor is the work done at the sleeve for a given percentage change of speed, i.e., it is the product of the effort and the displacement of the sleeve.
17. The centrifugal force on each ball of a governor is balanced by an equal and opposite force acting radially inwards known as *controlling force*.

Exercises

1. What is the function of a governor? How does it differ from that of a flywheel?
2. What are centrifugal governors? How do they differ from inertia governors?
3. Describe the function of a simple Watt governor. What are its limitations?
4. How does a Porter governor differ from that of a Watt governor?
5. Discuss the effect of friction on the functioning of a Porter governor? Deduce its governing equation taking into account the friction at the sleeve.
6. Describe the function of a Proell governor with the help of a neat sketch. Establish a relation among various forces acting on the bent link.
7. What are spring-controlled governors? Describe the function of any one of them.
8. Sketch a Hartnell governor. Describe its function and deduce a relation to find the stiffness of the spring.
9. Explain the working of a Hartung governor with a neat sketch.
10. Why is an auxiliary spring used along with main

springs in a Wilson–Hartnell governor? Deduce a relationship involving the stiffnesses of these springs and other parameters.

11. Describe the function of a Pickering governor or a spring-controlled gravity governor.
12. Why are the inertia governors quicker in action as compared to centrifugal governors? Explain.
13. Explain the principle of working of an inertia governor with the help of neat sketches.
14. Explain the terms *sensitiveness, hunting* and *stability* relating to governors.
15. What is the condition of isochronism in governors? In what type of governors can it be achieved? Find the required condition of isochronism in case of a Hartnell governor.
16. What is meant by effort and power of a governor? Find the expressions for the same in a Porter governor.
17. What is the controlling force of a governor? How are the controlling force curves drawn? How do they indicate the stability or instability of a governor? Indicate the shape of such a curve for an isochronous governor.
18. Figure 16.2 shows three forms of a Watt governor. In Fig. 16.2(a), length OA = 640 mm; in Fig. 16.2(b), EA = 480 mm, EF = 160 mm and in Fig.16.2(c), EA = 800 mm, EF = 160 mm. The angle $\theta = 30°$ in each case. Show that for the given configurations, the speed of rotation is the same. What will be the percentage change in speed for a 50 mm rise in the level of the balls? (4.8%; 9.8%; 1.8%)
19. Each arm of a Porter governor is 300 mm long and is pivoted on the axis of rotation. Each ball has a mass of 6 kg and the sleeve weighs 18 kg. The radius of rotation of the ball is 200 mm when the governor begins to lift and 250 mm when the speed is maximum. Determine the maximum and the minimum speeds and the range of speed of the governor. (146.8 rpm; 126.4 rpm; 20.4 rpm)
20. A Porter governor has each of its arms of 175-mm length pivoted on the axis of the governor. The radii of rotation of the balls at the minimum and the maximum speeds are 105 mm and 140 mm respectively. The mass of the sleeve is 20 kg and of each ball is 5 kg. Determine the range of speed when the friction at the sleeve is 15 N. (39.5 rpm)
21. Each arm of a Porter governor is 400 mm long. The upper arms are pivoted on the axis of the sleeve and the lower arms are attached to the sleeve at a distance of 40 mm from the axis. Each ball has a mass of 6 kg and the weight on the sleeve is 50 kg. Find the range of speed of the governor if the extreme radii of rotation of the balls are 260 mm and 300 mm. (10.6 rpm)
22. The mass of each ball of a Proell governor is 3 kg and the weight on the sleeve is 20 kg. Each arm is 220 mm long and the pivots of the upper and the lower arms are 20 mm form the axis. For the midposition of the sleeve, the extension links of the lower arms are vertical, the height of the governor is 180 mm and the speed is 150 rpm. Determine the lengths of the extension links and the tension in the upper arms. (125 mm; 155.9 N)
23. In a Hartnell governor, the lengths of the ball and the sleeve arms are equal. The extreme radii of rotation of the balls are 60 mm and 80 mm and the corresponding speeds are 160 rpm and 175 rpm. Each ball has a mass of 2 kg. Find the spring stiffness and the initial compression of the central spring. (2.01 N/mm, 33.5 mm,)
24. The following data relate to a Hartnell governor [Fig.16.12(a]:

    m = 1.5 kg; a = 100 mm; b = 40 mm; r_1 = 70 mm; r_2 = 110 mm; N_1 = 260 rpm; and N_2 = 275 rpm.

    The axis of rotation is 80 mm from the fulcrum. Calculate the rate of the spring and the equilibrium speed when the radius of the balls is 80 mm. (18.44 N/mm; 265.3 rpm)
25. The following data refer to a Wilson–Hartnell governor:

    Mass of each ball = 2.5 kg
    Minimum speed = 210 rpm
    Maximum speed = 220 rpm
    Minimum radius = 120 mm
    Maximum radius = 160 mm
    Length of ball arm of each bell-crank lever = 180 mm
    Length of sleeve arm of each bell-crank lever = 120 mm
    Combined stiffness of the two ball-springs = 300 N/m

    Determine the equivalent stiffness of the auxiliary spring referred to the sleeve.

    [Equivalent stiffness of the auxiliary spring referred to the sleeve = $S_a\,(y/x)^2$] (11.22 kN/m)
26. A gramophone is driven by a Pickering governor, each spring of which is 4 mm wide and 0.1 mm thick with a length of 40 mm. The distance between the spindle axis and the centre of mass when the governor is at rest is 6 mm. A mass of 20 g is attached to each leaf spring at the centre. Determine the speed of the turn table for a sleeve

lift of 0.5 mm if the ratio of the governor speed to the turn table speed is 8. E = 205 GN/m^2.

(68.9 rpm)

27. The mass of each ball of a spring-controlled gravity governor is 1.4 kg. The bell-crank lever has a 90-mm long vertical arm and a 40-mm long horizontal arm. The distance of the fulcrum from the axis of rotation is 45 mm. The sleeve has a mass of 7.5 kg. The sleeve begins to rise at 220 rpm and the rise of sleeve for 6% rise is 8 mm. Find the initial thrust in the spring and its stiffness.

(49.45 N; 9.19 N/mm)

28. A Porter governor has equal arms. Each arm is 240 mm long and is pivoted on the axis of rotation. Each ball has a mass of 5 kg and the load on the sleeve is 18 kg. The ball radius is 150 mm when the sleeve begins to rise and 200 mm at the maximum speed. Find the range of speed. Also, determine the coefficient of insensitiveness if the friction at the sleeve is equivalent to a force of 10 N.

(27.9 rpm; 0.044)

29. Each arm of a Porter governor is 250 mm long and is pivoted on the axis of rotation. The mass of each ball is 5 kg and the sleeve is 25 kg. The sleeve begins to rise when the radius of rotation of the balls is 150 mm and reaches the top when it is 200 mm. Determine the range of speed, lift of the sleeve, governor effort and power. In what way are these values changed if friction at the sleeve is equivalent to 10 N?

(25 rpm, 0.1 m, 44.8 N, 4.48 N.m;
31.3 rpm, 0.1 m, 57.3 N, 5.73 N.m)

30. The controlling force in a spring controlled governor is 1500 N when the radius of rotation of the balls is 200 mm and 887.5 N when it is 130 mm. The mass of each ball is 8 kg. If the controlling force curve is a straight line, determine the controlling force and the speed of rotation when the radius of rotation is 150 mm. Also find the increase in the initial tension so that the governor is isochronous. What will be the isochronous speed?

(1063 N, 284 rpm, 250 N, 316 rpm)

17 GYROSCOPE

Introduction

If the axis of a spinning or rotating body is given an angular motion about an axis perpendicular to the axis of spin, an angular acceleration acts on the body about the third perpendicular axis. The torque required to produce this acceleration is known as the *active gyroscopic torque*. A reactive gyroscopic torque or couple also acts similar to the concept of centripetal and centrifugal forces on a rotating body. The effect produced by the reactive gyroscopic couple is known as the *gyroscopic effect*. Thus aeroplanes, ships, automobiles, etc., that have rotating parts in the form of wheels or rotors of engines experience this effect while taking a turn, i.e., when the axes of spin is subjected to some angular motion.

17.1 ANGULAR VELOCITY

The angular velocity of a rotating body is specified by

- the magnitude of velocity
- the direction of the axis of rotor
- the sense of rotation of the rotor, i.e., clockwise or counter-clockwise

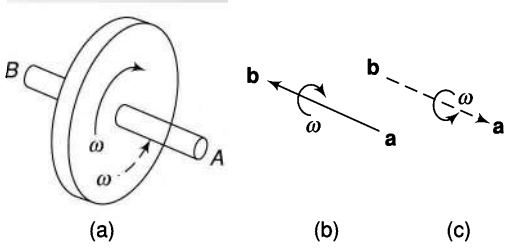

Fig. 17.1

Angular velocity is represented by a vector in the following manner:

(i) Magnitude of the velocity is represented by the length of the vector.

(ii) Direction of axis of the rotor is represented by drawing the vector parallel to the axis of the rotor or normal to the plane of the angular velocity.

(iii) Sense of rotation of the rotor is denoted by taking the direction of the vector in a set rule. The general rule is that of a right-handed screw, i.e., if a screw is rotated in the clockwise direction, it goes away from the viewer and vice-versa.

For example, Fig.17.1(a) shows a rotor which rotates in the clockwise direction when viewed from the end A. Its angular motion has been shown vectorially in Fig.17.1(b). The vector has been taken to a scale parallel to the axis of the rotor. The sense of direction of the vector is from **a** to **b** according to the screw rule. However, if the direction of rotation of the rotor is reversed, it would be from **b** to **a** [Fig.17.1(c)].

17.2 ANGULAR ACCELERATION

Let a rotor spin (rotate) about the horizontal axis Ox at a speed of ω rad/s in the direction as shown in Fig.17.2(a). Let **oa** represent its angular velocity [Fig.17.2(b)].

Now, if the magnitude of the angular velocity changes to ($\omega + \delta\omega$) and the direction of the axis of spin to Ox' (in time δt), the vector **ob** would represent its angular velocity in the new position. Join **ab** which represents the change in the angular velocity of the rotor. The vector **ab** can be resolved into two components:

(i) **ac** representing angular velocity change in a plane normal to **ac** or x-axis, and

(ii) **cb** representing angular velocity change in a plane normal to **cb** or y-axis.

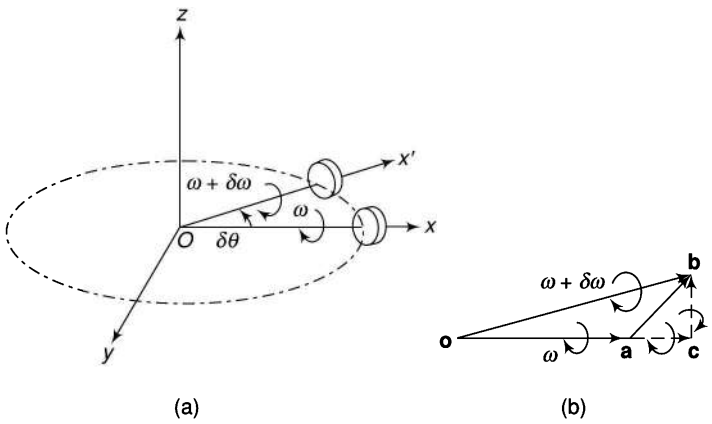

Fig. 17.2

Change of angular velocity, **ac** = $(\omega + \delta\omega)\cos\delta\theta - \omega$

$$\text{Rate of change of angular velocity} = \frac{(\omega+\delta\omega)\cos\delta\theta - \omega}{\delta t}$$

$$\therefore \text{ angular acceleration} = \underset{\delta t\to 0}{\text{Lt}} \frac{(\omega+\delta\omega)\cos\delta\theta - \omega}{\delta t}$$

As $\delta t \to 0$, $\delta\theta \to 0$ and $\cos\delta\theta \to 1$

$$\therefore \text{ angular acceleration} = \underset{\delta t\to 0}{\text{Lt}} \frac{\omega+\delta\omega-\omega}{\delta t} = \frac{d\omega}{dt}$$

Change of angular velocity, **cb** = $(\omega + \delta\omega)\sin\delta\theta$

$$\text{Rate of change of angular velocity} = \frac{(\omega+\delta\omega)\sin\delta\theta}{\delta t}$$

$$\therefore \text{ angular acceleration} = \underset{\delta t\to 0}{\text{Lt}} \frac{(\omega+\delta\omega)\sin\delta\theta}{\delta t}$$

As $\delta t \to 0$, $\delta\theta \to 0$ and $\sin\delta\theta \to \delta\theta$

$$\therefore \text{ angular acceleration} = \underset{\delta t\to 0}{\text{Lt}} \frac{(\omega+\delta\omega)\delta\theta}{\delta t} = \omega\frac{d\theta}{dt}$$

$$\text{Total angular acceleration, } \alpha = \frac{d\omega}{dt} + \omega\frac{d\theta}{dt} \tag{17.1}$$

This shows that the total angular acceleration of the rotor is the sum of

(i) $d\omega/dt$, representing change in the magnitude of the angular velocity of the rotor

(ii) $\omega.d\theta/dt$, representing change in the direction of the axis of spin, the direction of **cb** is from **c** to **b** in the vector diagram (being a component of **ab**), the acceleration acts clockwise in the vertical plane xz (when viewed from front along the y-axis)

17.3 GYROSCOPIC TORQUE (COUPLE)

Let I be the moment of inertia of a rotor and ω its angular velocity about a horizontal axis of spin Ox in the direction as shown in Fig.17.3(a). Let this axis of spin turn through a small angle $\delta\theta$ in the horizontal plane (xy) to the position Ox' in time δt.

Figure 17.3(b) shows the vector diagram. **oa** represents the angular velocity vector when the axis is Ox and **ob** when the axis is changed to Ox'. Then **ab** represents the change in the angular velocity due to change in direction of the axis of spin of the rotor. This change in the angular velocity is clockwise when viewed from **a** towards **b** and is in the vertical plane xz. This change results in an angular acceleration, the sense and direction of which are the same as that of the change in the angular velocity.

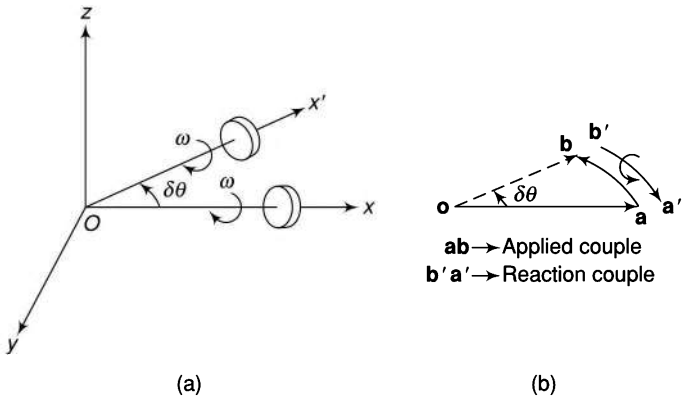

Fig. 17.3

Change in angular velocity, $\mathbf{ab} = \omega \times \delta\theta$

Angular acceleration, $\alpha = \omega \dfrac{\delta\theta}{\delta t}$

In the limit, when $\delta t \to 0$, $\alpha = \omega \dfrac{\delta\theta}{\delta t}$

Usually, $d\theta/dt$, the angular velocity of the axis of spin is called the *angular velocity of precession* and is denoted by ω_p.

$\therefore$ Angular acceleration, $\alpha = \omega.\omega_p$.

The torque required to produce this acceleration is known as the gyroscopic torque and is a couple which must be applied to the axis of spin to cause it to rotate with angular velocity ω_p about the axis of precession Oz.

Acceleration torque, $T = I$

$$a = I\,\omega\,\omega_p \tag{17.2}$$

For the configuration of Fig.17.3(a),

Ox is known as the axis of spin

Oz is known as the axis of precession

Oy is known as the axis of gyroscopic couple

yz is the plane of spin (parallel to plane of rotor)

xy is the plane of precession

yz is the plane of gyroscopic couple00

The torque obtained above is that which is required to cause the axis of spin to precess in the horizontal plane and is known as the *active gyroscopic torque* or the applied torque. A *reactive gyroscopic torque* or reaction torque is also applied to the axis which tends to rotate the axis of spin in the opposite direction, i.e., in the counter-clockwise direction in the above case. Just as the centrifugal force on a rotating body tends to move the body outwards, while a centripetal acceleration (and thus centripetal force) acts on it inwards, in the same way, the effects of active and reactive gyroscopic torques can be understood.

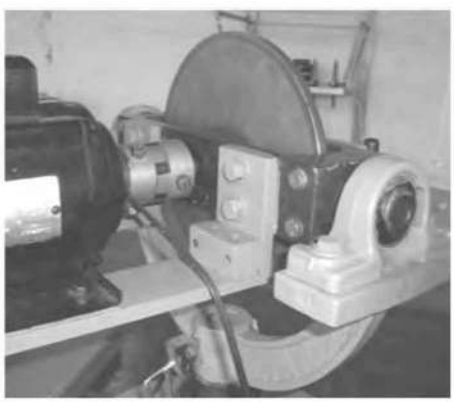

A gyroscope

The effect of the gyroscopic couple on a rotating body is known as the *gyroscope effect* on the body. A *gyroscope* is a spinning body which is free to move in other directions under the action of external forces.

Example 17.1 *A uniform disc having a mass of 8 kg and a radius of gyration of 150 mm is mounted on one end of a horizontal arm of 200-mm length. The other end of the arm can rotate freely in a universal bearing. The disc is given a clockwise spin of 250 rpm as seen from the disc end of the arm. Determine the motion of the disc if the arm remains horizontal.*

Solution

$m = 8$ kg $\qquad l = 0.2$ m

$k = 0.15$ m $\qquad N = 240$ rpm

$I = mk^2 = 8 \times (0.15)^2 = 0.18$ kg.m^2

$$\omega = \frac{2\pi \times 240}{60} = 25.13 \text{ rad/s}$$

$C = I\,\omega\omega_p$

$Mgl = I\,\omega\,\omega_p$

$8 \times 9.81 \times 0.2 = 0.18 \times 25.13 \times \omega_p$

$\omega_p = 3.47$ rad/s

As the disc rotates, the weight of the disc acts downwards and thus a couple about the y-axis, in the clockwise direction is applied on the disc (Fig.17.4). The reaction couple is thus counter-clockwise which tends to keep the arm horizontal.

Assuming that the axis of spin Ox precesses about the z-axis in the counter-clockwise direction, the vector **oa** would rotate to the position **ob** in a short period. Then **ab** is the applied couple and **b′a′** is the reaction couple which is clockwise and tends to give the arm a clockwise rotation about the y-axis which is not true. Thus, the axis of spin Ox must precess about the z-axis in the clockwise direction with an angular velocity of 3.47 rad/s.

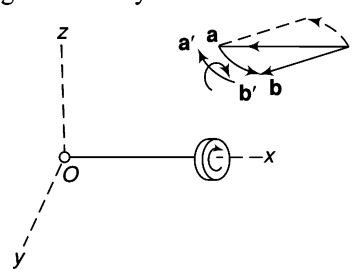

Fig. 17.4

Example 17.2 *A disc with radius of gyration of 60 mm and a mass of 4 kg is mounted centrally on a horizontal axle of 80 mm length between the bearings. It spins about the axle at 800 rpm counter-clockwise when viewed from the right-hand side bearing. The axle precesses about a ver axis at 50 rpm in the clockwise direction when viewed from above. Determine the resultant reaction at each bearing due to the mass and the gyroscopic effect.*

Solution

$m = 4$ kg $\qquad N = 800$ rpm

$k = 0.06$ m $\qquad N_p = 50$ rpm

$I = mk^2 = 4 \times (0.06)^2$

$= 0.0144$ kg.m^2

$l = 80$ mm $= 0.08$ m

$$\omega = \frac{2\pi \times 800}{60} = 83.78 \text{ rad/s}$$

$$\omega_p = \frac{2\pi \times 50}{60} = 5.24 \text{ rad/s}$$

$\therefore \quad C = I\,\omega\omega_p$

$= 0.0144 \times 83.78 \times 5.24 = 6.32$ N.m

The applied (active) and reaction couples are shown in Fig. 17.5. The reaction couple is clockwise when viewed from front and tends to raise the bearing A and lower the bearing B. Thus, reaction of each bearing in turn is downwards at A and upwards at B.

Reaction at bearing A due to gyro. couple

$$= \frac{C}{l} = \frac{6.32}{0.08} = 79 \text{ N (downwards)}$$

Reaction at bearing B due to gyro. couple = 79 N (upwards)

Force at each bearing due to weight of the disc

$$= \frac{4 \times 9.81}{2} = 19.6 \text{ N}$$

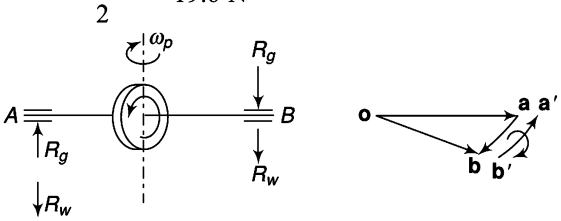

Fig. 17.5

or Reaction at each bearing due to weight = 19.6 N (upwards)

∴ Reaction at bearing A = 79 – 19.6 = 59.4 N (upwards)

Reaction at bearing B = 79 + 19.6 = 98.6 N (downwards)

17.4 GYROSCOPIC EFFECT ON AEROPLANES

Figure 17.6(a) shows an aeroplane in space. Let the propeller be rotating in the clockwise direction when viewed from the rear end. The angular momentum vector **oa** due to the angular velocity is shown in Fig. 17.6(b).

- If the plane takes a left turn, the angular momentum vector is shifted and may be represented by the vector **ob**. The change is shown by the vector **ab** and is the active gyroscopic couple. This vector is in the horizontal plane and is perpendicular to the vector **oa** in the limit. The reactive vector is given by **b'a'** which is equal and opposite to the vector **ab**. The interpretation of this vector shows that the couple acts in the vertical plane and is counter-clockwise when viewed from the right-hand side of the plane. This indicates that it tends to raise the nose and depress the tail of the aeroplane.
- Figure 17.6(c) shows the gyroscopic effect, when the aeroplane takes the right turn. The change is shown by the vector **cd** and is the active gyroscopic couple. It is perpendicular to the vector **oc** in the limit in the horizontal plane. The reactive couple is given by **d'c'**. The couple acts in the vertical plane and is clockwise when viewed from the right-hand side of the plane. Thus, it tends to dip the nose and raise the tail of the aeroplane.
- If the rotation of the engine is reversed, i.e., it rotates counter-clockwise when viewing from the rear end, the angular momentum vector is **oe** as shown in Fig. 17.6(d). On taking a left turn, it changes to **of**. The active gyroscopic vector is **ef** and the reactive **fe'**. Viewing from the right-hand side of the plane, it indicates that the nose is dipped and the tail is raised. Similarly, when the plane takes a right turn, the effect is indicated in Fig. 15.6(e). The nose is raised and the tail is depressed.

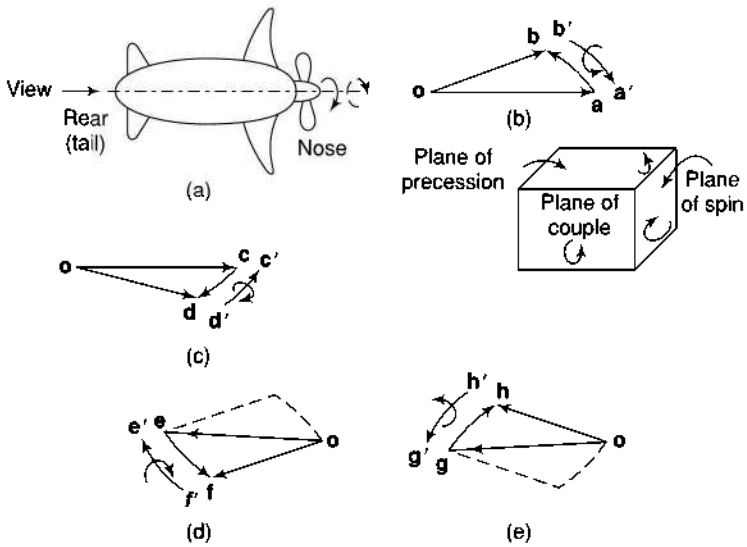

Fig. 17.6

It can be concluded from the above cases that if the direction of either the spin of the rotor or of the precession is changed, the gyroscopic effect is reversed, but if both are changed, the effect remains the same.

Example 17.3 *An aeroplane flying at 240 km/h turns towards the left and completes a quarter circle of 60m radius. The mass of the rotary engine and the propeller of the plane is 450 kg with a radius of gyration of 320 mm. The engine speed is 2000 rpm clockwise when viewed from the rear. Determine the gyroscopic couple on the aircraft and state its effect.*

In what way is the effect changed when the

(i) aeroplane turns towards right

(ii) engine rotates clockwise when viewed from the front (nose end) and the aeroplane turns (a) left (b) right?

Solution

$m = 450$ kg, $k = 0.32$ m,

$$\omega = \frac{2\pi \times 2000}{60} = 209.4 \text{ rad/s},$$

$$v = \frac{240 \times 10^3}{3600} = 66.67 \text{ m/s}$$

$$I = mk^2 = 450 \times (0.32)^2 = 46.08 \text{ kg.m}^2$$

$$\omega_p = \frac{v}{r} = \frac{66.67}{60} = 1.11 \text{ rad/s}$$

$$C = I\,\omega\omega_p = 46.08 \times 209.4 \times 1.11$$
$$= 10\,713 \text{ N.m} = 10.713 \text{ kN.m}$$

The effects of gyroscopic couples on the aeroplane when it takes a left or right turn are discussed in the previous section. In brief it is summarized below:

Figure 17.6(a) shows the aeroplane in space. When it turns left,

oa is the angular momentum vector before turning [Fig.17.6(b)];

ob is the angular momentum vector after turning;

ab is the applied or active gyroscopic couple;

b′a′ is the reaction couple and is perpendicular to **oa** in the limit. This couple acts in the vertical plane and tends to raise the nose and depress the tail of the aeroplane.

(i) If the aeroplane takes a right turn, the reaction couple is **d′c′** [Fig. 17.6(c)], which shows that the nose is depressed and the tail is raised.

(ii) (a) When the engine rotates or spins clockwise on viewing from the nose end, **ef** is the applied couple as the aeroplane turns left [Fig.17.6(d)]. **f′e′** is the reaction couple indicating that the nose is depressed and the tail is raised.

(b) When the aeroplane takes a right turn, the tail is depressed and the nose is raised [Fig.17.6(e)].

17.5 GYROSCOPIC EFFECT ON NAVAL SHIPS

Some of the terms used in connection with the motion of naval ships or sea vessels are given below [Fig.17.7(a)]:

(a) *Bow* is the fore or the front end.

(b) *Stern* or *aft* is the rear end.

(c) *Starboard* is the right-hand side when looking from the stern.

(d) *Port* is the left-hand side when looking from the stern.

(e) *Steering* is turning on the side when viewing from the top.

(f) *Pitching* is limited angular motion of the ship about the transverse axis.

(g) *Rolling* is limited angular motion of the ship about the longitudinal axis.

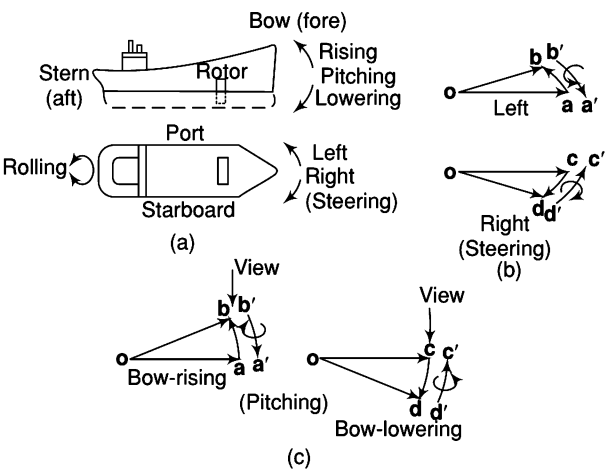

Fig. 17.7

Let the plane of spin of the rotor and other rotating masses be horizontal and across the breadth of the ship. Assume ω to be the angular velocity of the rotor in the clockwise direction when viewed from stern (rear end).

Gyroscopic Effect during Pitching

When the ship turns left, the angular momentum vector changes from **oa** to **ob** [Fig.17.7 (b)]. The reaction couple is found to be **b′a′** which tends to raise the bow and lower the stern. On turning right, the reaction couple is reversed so that bow is lowered and the stern is raised.

Gyroscopic Effect on Pitching

Pitching of the ship is usually considered to take place with simple harmonic motion. A simple harmonic motion is represented by, $x = X \sin \omega_0 t$.

Such a motion is obtained by the projection of a rotating vector X on a diameter while rotating around a circle with a constant angular velocity ω_0 and where x is the displacement from the mean position in time t. In the same way, angular displacement θ of the axis of spin from its mean position is given by

$$\theta = \varphi \sin \omega_0 t$$

where φ = amplitude (angular) of swing or the maximum angle turned from the mean position in radius

ω_0 = angular velocity of SHM $\dfrac{2\pi}{\text{Time period}}$

Angular velocity of precession, $\dfrac{d\theta}{dt} = \varphi\omega_0 \cos \omega_0 t$

This is maximum when $\cos \omega_0 t = 1$.

Therefore, maximum angular velocity of precession $\omega_p = \varphi\, \omega_0$

$$\text{Gyroscopic couple } I\omega\omega_p = I\omega\left(\varphi \times \frac{2\pi}{\text{Time period}}\right) \tag{17.4}$$

When the bow is rising, the reaction couple is clockwise on viewing from top and thus the ship would move towards right or starboard side. Similarly, when the bow is lowered, the ship turns towards left or port side [Fig. 17.7(c)].

$$\text{Angular acceleration} = \varphi\omega_0^2 \sin \omega_0 t \tag{17.5}$$

$$\text{Maximum angular acceleration} = \varphi\omega_0^2 \tag{17.6}$$

Gyroscopic Effect on Rolling

As the axes of the rolling of the ship and of the rotor are parallel, there is no precession of the axis of spin and thus there is no gyroscopic effect.

In the same way, the effects on steering, pitching or rolling can be observed when the plane of the spin of the rotating masses is horizontal but along the longitudinal axis of the vessel or when the axis is vertical.

Example 17.4 *The turbine rotor of a ship has a mass of 2.2 tonnes and rotates at 1800 rpm clockwise when viewed from the aft. The radius of gyration of the rotor is 320 mm. Determine the gyroscopic couple and its effect when the*

(i) ship turns right at a radius of 250 m with a speed of 25 km/h

(ii) ship pitches with the bow rising at an angular velocity of 0.8 rad/s

(iij) ship rolls at an angular velocity of 0.1 rad/s

Solution

$m = 2200$ kg $\qquad N = 1800$ rpm

$R = 250$ m $\qquad v = 25$ km/h

$k = 0.32$ m $\qquad = \dfrac{25 \times 1000}{3600}$

$= 6.94$ m/s

$I = mk^2 = 2200 \times (0.32)^2$

$= 225.3$ kg.m^2

$$\omega = \frac{2\pi \times 1800}{60} = 188.5 \text{ rad/s}$$

$$\omega_p = \frac{v}{R} = \frac{6.94}{250} = 0.0278 \text{ rad/s}$$

(i) $C = I\,\omega\omega_p$

$= 225.3 \times 188.5 \times 0.0278$

$= 1180$ N.m

The effect is to lower the bow (fore) and raise the stern (aft) when the ship turns right [Fig. 17.7(b)].

(ii) $\omega_p = 0.8$ rad/s

$C = I\,\omega\omega_p = 225.3 \times 188.5 \times 0.8$

$= 33\,972$ N.m

The effect of the reaction couple when the bow is rising, is to turn the ship towards right or towards starboard.

(iii) $\omega_p = 0.1$ rad/s

$C = 225.3 \times 188.5 \times 0.1 = 4246.5$ N.m

As the axis of spin is always parallel to the axis of precession for all positions, there is no gyroscopic effect on the ship.

Example 17.5 *The rotor of the turbine of a ship has a mass of 2500 kg and rotates at a speed of 3200 rpm counter-clockwise when viewed from stern. The rotor has radius of gyration of 0.4 m. Determine the gyroscopic couple and its effect when*

(i) the ship steers to the left in a curve of 80-m radius at a speed of 15 knots (1 knot = 1860 m/h)

(ii) the ship pitches 5 degrees above and 5 degrees below the normal position and the bow is descending with its maximum velocity—the pitching motion is simple harmonic with a periodic time of 40 seconds

(iii) the ship rolls and at the instant, its angular velocity is 0.4 rad/s clockwise when viewed from stern

Also find the maximum angular acceleration during pitching.

Solution

$m = 2500$ kg $\qquad N = 1800$ rpm

$k = 0.4$ m $\qquad v = \dfrac{15 \times 1860}{3600} = 7.75$ m/s

$I = mk^2 = 2500 \times (0.4)^2 = 400$ kg.m^2

$$\omega = \frac{2\pi \times 3200}{60} = 335 \text{ rad/s}$$

(i) $R = 80$ m

$$\omega_p = \frac{v}{R} = \frac{775}{80} = 0.097 \text{ rad/s}$$

$C = 400 \times 335 \times 0.097$

$= 12\,981$ N.m

The effect is to lower the bow and raise the stern [Figs 17.8 (a) and (b)].

(ii) $\varphi = 5° = 5 \times \dfrac{\pi}{180} = 0.0873$ rad

$T = 40$ s

$$\therefore \quad \omega_0 = \frac{2\pi}{40} = 0.157 \text{ rad/s}$$

$\omega_p = \varphi\,\omega_0 = 0.0873 \times 0.157 = 0.0137$ rad/s

$C = I\,\omega\,\omega_p = 400 \times 335 \times 0.0137 = 1837.5$ N.m

As the bow descends during pitching, the ship would turn towards right or starboard [Figs 17.8(a) and (c)].

(iii) $\omega_p = 0.04$ rad/s

$C = 400 \times 335 \times 0.04 = 5360$ N.m

No gyroscopic effect is there as discussed earlier.

Maximum angular acceleration during pitching

$\alpha_{max} = \varphi\omega_0^2 = 0.0873 \times (0.157)^2 = \underline{0.00215 \text{ rad/s}^2}$

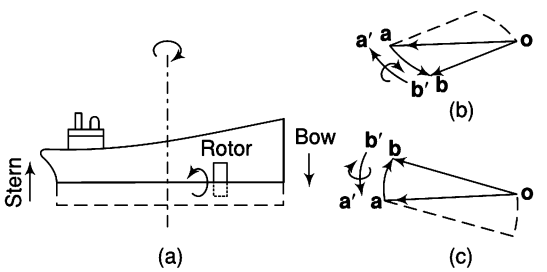

Fig. 17.8

17.6 STABILITY OF AN AUTOMOBILE

In case of a four-wheeled vehicle, it is essential that no wheel is lifted off the ground while the vehicle takes a turn. The condition is fulfilled as long as the vertical reaction of the ground on any of the wheels is positive (or upwards).

Figure 17.9 shows a four-wheeled vehicle having a mass m. Assuming that the weight is equally divided among the four wheels,

weight on each wheel $= \frac{W}{4} = \frac{mg}{4}$ (downwards)

Reaction of ground on each wheel, $R_w = \frac{W}{4} = \frac{mg}{4}$ (upwards)

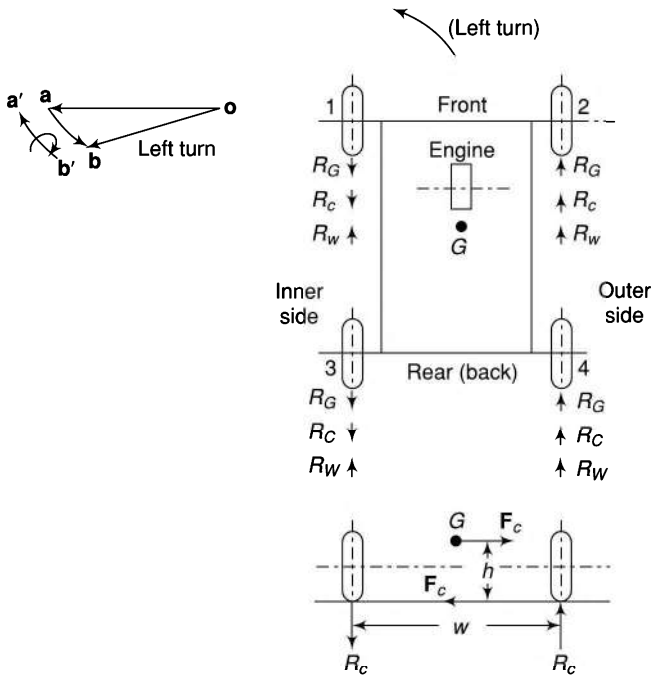

Fig. 17.9

Effect of Gyroscopic Couple

Gyroscopic couple due to four wheels, $C_w = 4I_w\omega_w\omega_p = 4I_w\frac{v^2}{rR}$

where I_w = mass moment of inertia of each wheel

ω_w = angular velocity of wheels $= \frac{v}{r}$

ω_p = angular velocity of precession $= \frac{v}{R}$

v = linear velocity of the vehicle
R = radius of curvature
Gyroscopic couple due to engine rotating parts,

$$C_e = I_e\,\omega_e\,\omega_p = I_e\,G\,\omega_w\,\omega_p$$

where G is the gear ratio = $\dfrac{\omega_e}{\omega_w}$

Total gyroscopic couple, $C_G = C_w \pm C_e$

Positive sign is used when the engine parts rotate in the same direction as the wheels and the negative sign when they rotate in the opposite.

Assuming that C_G is positive and the vehicle takes a left turn, the reaction gyroscopic couple on it is clockwise when viewed from the rear of the vehicle. The reaction couple is provided by equal and opposite forces on the outer and the inner wheels of the vehicle.

Forces on the two outer wheels = $\dfrac{C_G}{w}$ (downwards)

Forces on the two inner wheels = $\dfrac{C_G}{w}$ (upwards)

Forces on each of the outer wheels = $\dfrac{C_G}{2w}$ (downwards)

Forces on each of the inner wheels = $\dfrac{C_G}{2w}$ (upwards)

Thus the force on each of the outer wheels is similar to the weight. On the inner wheels it is in the opposite direction. Thus,

Reaction of ground on each outer wheel, $R_G = \dfrac{C_G}{2w}$ (upwards)

Reaction of ground on each inner wheel, $R_G = \dfrac{C_G}{2w}$ (downwards)

Effect of Centrifugal Couple

As the vehicle moves on a curved path, a centrifugal force also acts on the vehicle in the outward direction at the centre of mass of the vehicle.

$$\text{Centrifugal force, } mR\omega_p^2 = mR\left(\frac{v}{R}\right)^2 = m\frac{v^2}{R}$$

This force would tend to overturn the vehicle outwards and the overturning couple will be

$$C_c = mR\omega_p^2 \times h = m\frac{v^2}{R}h$$

This is equivalent to a couple due to equal and opposite forces on outer and inner wheels.

Force on each outer wheel = $\dfrac{C_c}{2w}$ (downwards)

Force on each inner wheel = $\dfrac{C_c}{2w}$ (upwards)

Again, the force on each of the outer wheels is similar to the weight and on each of the inner wheels, it is opposite.

Reaction of ground on each outer wheel, $R_c = \dfrac{C_c}{2w}$ (upwards)

Reaction of ground on each inner wheel, $R_c = \dfrac{C_c}{2w}$ (downwards)

Vertical reaction on each outer wheel $= \dfrac{W}{4} + \dfrac{C_G}{2w} + \dfrac{C_c}{2w}$ (upwards)

Vertical reaction on each inner wheel $= \dfrac{W}{4} + \dfrac{C_G}{2w} + \dfrac{C_c}{2w}$ (upwards)

It can be observed that there are chances that the reaction of the ground on the inner wheels may not be upwards and thus the wheels are lifted from the ground. For positive reaction, the conditions will be

$$\frac{W}{4} - \frac{C_G}{2w} - \frac{C_c}{2w} \geq 0$$

or
$$\frac{W}{4} \geq \frac{C_G + C_c}{2w}$$

or
$$R_w \geq R_G + R_c \tag{17.7}$$

Example 17.6 *Each wheel of a four-wheeled rear engine automobile has a moment of inertia of 2.4 kg.m² and an effective diameter of 660 mm. The rotating parts of the engine have a moment of inertia of 1.2 kg.m². The gear ratio of engine to the back wheel is 3 to 1. The engine axis is parallel to the rear axle and the crankshaft rotates in the same sense as the road wheels. The mass of the vehicle is 2200 kg and the centre of the mass is 550 mm above the road level. The track width of the vehicle is 1.5 m. Determine the limiting speed of the vehicle around a curve with 80 m radius so that all the four wheels maintain contact with the road surface.*

Solution

$I_w = 2.4$ kg.m² $\quad m = 2200$ kg

$r = 0.33$ m $\quad h = 0.55$ m

$I_e = 1.2$ kg.m² $\quad w = 1.5$ m

$G = \dfrac{\omega_e}{\omega_w} = 3 \quad R = 80$ m

(i) Reaction due to weight

$$R_w = \frac{mg}{4} = \frac{2200 \times 9.81}{4} = 5395.5 \text{ N (upwards)}$$

(ii) Reaction due to gyroscopic couple

$$C_w = 4I_w \frac{v^2}{rR} = 4 \times 2.4 \times \frac{v^2}{0.33 \times 80} = 0.364v^2$$

$$C_e = I_e G\omega_w\omega_p = 1.2 \times 3 \times \frac{v^2}{0.33 \times 80} = 0.136v^2$$

$\therefore \; C_G = C_w + C_e = 0.364\, v^2 + 0.136\, v^2 = 0.5\, v^2$

Reaction on each outer wheel,

$$R_{Go} = \frac{C_G}{2w} = \frac{0.5v^2}{2 \times 1.5} = 0.167v^2 \text{ (upwards)}$$

Reaction on each inner wheel,

$R_{Gi} = 0.167\, v^2$ (downwards)

(iii) Reaction due to centrifugal couple

$$C_c = \frac{mv^2}{R}h = \frac{2200 \times v^2}{80} \times 0.55 = 15.125v^2$$

Reaction on each outer wheel,

$$R_{co} = \frac{C_e}{2w} = \frac{15.125v^2}{2 \times 1.5} = 5.042v^2 \text{ (upwards)}$$

Reaction on each inner wheel,

$R_{ci} = 5.042\, v^2$ (downwards)

For maximum safe speed, the condition is

$R_w = R_{Gi} + R_{ci}$

$5395.5 = (0.167 + 5.042)\, v^2$

$v^2 = 1035.8$

$v = 32.18$ m/s

or $v = \dfrac{32.18 \times 3600}{1000} = 115.9$ km/h

Example 17.7 *A four-wheeled trolley car has a total mass of 3000 kg. Each axle with its two wheels and gears has a total moment of inertia of 32 kg.m². Each wheel is of 450-mm radius. The centre distance between two wheels on an axle is 1.4 m. Each axle is driven by a motor with a speed ratio of 1:3. Each motor along with its gear has a moment of inertia of 16 kg.m² and rotates in the opposite direction to that of the axle. The centre of mass of the car is 1 m above the rails. Calculate the limiting speed of the car when it has to travel around a curve of 250-m radius without the wheels leaving the rails.*

Solution

$I_w = \frac{32}{2} = 16$ kg.m² $\quad m = 3000$ kg

$r = 0.45$ m $\quad h = 1$ m

$I_m = 16$ kg.m² $\quad w = 1.4$ m

$R = 250$ m

(i) Reaction due to weight

$$R_w = \frac{mg}{4} = \frac{3000 \times 9.81}{4} = 7357.5 \text{ N (upwards)}$$

(ii) Reaction due to gyroscopic couple

$$C_w = 4I_w \frac{v^2}{r.R} = 4 \times 16 \times \frac{v^2}{0.45 \times 250} = 0.569v^2$$

$C_m = 2I_m G\omega_w\omega_p$ (as there are two motors)

$$= 2 \times 16 \times 3 \times \frac{v^2}{0.45 \times 250}$$

$= 0.853\ v^2$

$C_G = C_w - C_m$

(motors rotate in opposite direction)

$= 0.569\ v^2 - 0.853\ v^2 = -0.284v^2$

Reaction on each outer wheel,

$$R_{Go} = \frac{C_G}{2w} = \frac{0.284v^2}{2 \times 1.4} = 0.1014v^2 \text{ (downwards)}$$

Reaction on each inner wheel, $R_{Go} = 0.1014\ v^2$ (upwards)

(iii) Reaction due to centrifugal couple

$$C_c = \frac{mv^2}{R}h = 3000 \times \frac{v^2}{250} \times 1 = 12v^2$$

$$R_{Co} = \frac{C_c}{2w} = \frac{12v^2}{2 \times 1.4} = 4.286v^2 \text{ (upwards)}$$

$$R_{Ci} = \frac{C_c}{2w} = 4.286\,v^2 \text{ (downwards)}$$

Total reaction on outer wheel

$= 7357.5 - 0.1014\ v^2 + 4.286v^2$

$= 7357.5 + 4.1846v^2$

Total reaction on inner wheel

$= 7357.5 - 0.1014\ v^2 - 4.286v^2$

$= 7357.5 - 4.1846v^2$

Thus, the reaction on the outer wheel is always positive (upwards). There are chances that the inner wheels leave the rails.

For maximum speed, $7357.5 - 4.1846v^2 = 0$

or $\quad v^2 = 1758.2$

$v = 41.93$ m/s

or $\quad v = \frac{41.93 \times 3600}{1000} = \underline{151 \text{ km/h}}$

Example 17.8 *A 2.2-tonne racing car has a wheel base of 2.4 m and a track of 1.4 m. The centre of mass of the car lies at 0.6 m above the ground and 1.4 m from the rear axle. The equivalent mass of engine parts is 140 kg with a radius of gyration of 150 mm. The back axle ratio is 5. The engine shaft and flywheel rotate clockwise when viewed from the front. Each wheel has a diameter of 0.8 m and a moment of inertia of 0.7 kg.m².*

Determine the load distribution on the wheels when the car is rounding a curve of 100 m radius at a speed of 72 km/h to the (i) left, and (ii) right.

Solution:

$M = 2200$ kg $\quad m = 140$ kg

$w = 1.4$ m $\quad k = 0.15$ m

$b = 2.4$ m $\quad I_w = 0.7$ kg.m²

$r = 0.8/2 = 0.4$ m

$R = 100$ m $\quad v = \frac{72 \times 1000}{3600} =$ m/s

(i) *Car turning left* (Refer Fig. 17.10)

(a) *Reaction due to weight*

Total weight $= 2200 \times 9.81 = 21582$ N

$$R_{w1,2} = \left(21\ 582 \times \frac{1.4}{2.4}\right) \times \frac{1}{2} = 6295 \text{ N (upwards)}$$

$$R_{w3,4} = \left(21\ 582 \times \frac{1}{2.4}\right) \times \frac{1}{2} = 4496 \text{ N (upwards)}$$

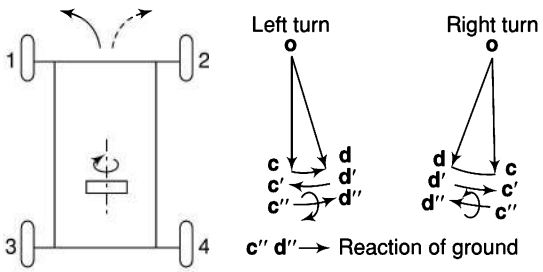

Fig. 17.10

(b) *Reaction due to gyroscopic couples*

$$C_w = 4I_w \frac{v^2}{rR} = 4 \times 0.7 \times \frac{(20)^2}{0.4 \times 100} = 28 \text{ N.m}$$

For outer wheels,

$$R'_{G2,4} = \frac{C_w}{2w} = \frac{28}{2 \times 1.4} = 10 \text{ N (upwards)}$$

For inner wheels, $R'_{G1,3} = 10$ N (downwards)

$I_e = mk^2 = 140 \times (0.15)^2 = 3.15$ kg.m^2

$$C_e = I_e G \omega_w \omega_p = 3.15 \times 5 \times \frac{(20)^2}{0.4 \times 100} = 157.5 \text{ N}$$

For front wheels,

$$R''_{G1,2} = \frac{C_e}{2b} = \frac{157.5}{2 \times 2.4} = 32.8 \text{ N (upwards)}$$

For rear wheels, $R''_{G3,4} = 32.8$ N (downwards)

(c) *Reaction due to centrifugal couple*:

$$C_c = M \frac{v^2}{R} h = 2200 \times \frac{(20)^2}{100} \times 0.6 = 5280 \text{ N.m}$$

For outer wheels,

$$R_{c2,4} = \frac{C_c}{2w} = \frac{5280}{2 \times 1.4} = 1886 \text{ N (upwards)}$$

For rear wheels, $R_{c1,3} = 1886$ N (downwards)

Therefore, reaction on wheels:

$R = R_w + R'_G + R''_G + R_c$

$R_1 = 6295 - 10 + 32.8 - 1886 = 4431.8$ N

$R_2 = 6295 + 10 + 32.8 + 1886 = 8223.8$ N

$R_3 = 4496 - 10 - 32.8 - 1886 = 2567.2$ N

$R_4 = 4496 + 10 - 32.8 + 1886 = 6359.2$ N

(ii) *Car turning right*:

All the reactions due to gyroscopic couples and centrifugal couple change signs. Therefore,

$R_1 = 6295 + 10 - 32.8 + 1886 = 8158.2$ N

$R_2 = 6295 - 10 - 32.8 - 1886 = 4366.2$ N

$R_3 = 4496 + 10 + 32.8 + 1886 = 6424.8$ N

$R_4 = 4496 - 10 + 32.8 - 1886 = 2632.8$ N

Example 17.9 *The total mass of a four-wheeled trolley car is 1800 kg. The car runs on rails of 1.6 - m gauge and rounds a curve of 24-m radius at 36 km/h. The track is banked at 10°. The external diameter of the wheels is 600 mm and each pair with axle has a mass of 180 kg with a radius of gyration of 240 mm. The height of the centre of mass of the car above the wheel base is 950 mm. Determine the pressure on each rail allowing for centrifugal force and gyroscopic couple actions.*

Solution

$M = 1800$ kg	$\theta = 10°$
$w = 1.6$ m	$h = 0.95$
$R = 24$ m	$r = 0.3$ m
$m = 180$ m	$k = 0.24$ m

$$v = 36 \text{ km/h} = \frac{36 \times 1000}{3600} = 10 \text{ m/s.}$$

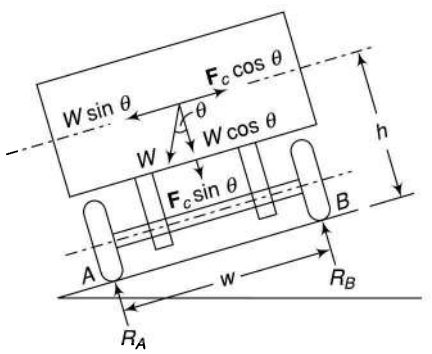

Fig. 17.11

First, considering the effect of dead weight ($W = Mg$) of the car and that of the centrifugal force on it, determine the reactions R_A and R_B at the wheels A and B (Fig. 17.11).

Resolving the forces perpendicular to the track,

$$R_A + R_B = Mg\cos\theta + \frac{Mv^2}{R}\sin\theta$$

$$= 1800 \times 9.81 \times \cos 10° + \frac{1800 \times (10)^2}{24}\sin 10°$$

= 18 692 N

Taking moments about B,

$$R_A \times w = Mg\cos\theta\frac{w}{2} + F_c\sin\theta\frac{w}{2} + Mg\sin\theta \times h - F_c\cos\theta \times h$$

$$R_A = \left(Mg\cos\theta + \frac{Mv^2}{R}\sin\theta\right) \times \frac{1}{2} + \left(Mg\sin\theta - \frac{Mv^2}{R}\cos\theta\right) \times \frac{h}{w}$$

$$R_A = \left(\begin{array}{l}1800 \times 9.81 \times \cos 10° \\ + \dfrac{1800 \times (10)^2}{24} \times \sin 10°\end{array}\right) \times \frac{1}{2} + \left(\begin{array}{l}1800 \times 9.81 \times \sin 10° \\ - \dfrac{1800 \times (10)^2}{24} \times \cos 10°\end{array}\right) \times \frac{0.95}{1.6}$$

= 9346 – 2565 = 6781 N

R_B = 18 692 – 6781 = 11 911 N

Reaction due to cyroscopic couple

$$C_w = 2I_w\omega_w\cos\theta \times \omega_p = 2mk^2\frac{v^2}{rR} \times \cos\theta$$

$$= 2 \times 180 \times (0.24)^2 \times \frac{(10)^2}{0.3 \times 24} \times \cos 10°$$

= 283.6 N.m

Reaction on each outer wheel,

$$R_{Go} = \frac{C_w}{2w} = \frac{283.6}{2 \times 1.6} = 88.6 \text{ N (upwards)}$$

Reaction on each inner wheels,

R_{Gi} = 88.6 N (downwards)

Therefore,

Pressure on outer rails = $R_B + R_{Go}$
= 11 911 + 88.6
= 11 999.6 N (downwards)

Pressure on inner rails = $R_A - R_{Gi}$
= 6781 – 88.6
= 6692.4 N (upwards)

(pressure is opposite to the reactions)

17.7 STABILITY OF A TWO-WHEEL VEHICLE

The case of a two-wheel vehicle can be taken in the same way as that of an automobile. However, it is easier to tilt such a vehicle inwards to neutralise the overturning effect and the vehicle can stay in equilibrium while taking a turn.

Let a vehicle take a left turn as shown in Fig. 17.12(a). The vehicle is inclined to the vertical (inwards) for equilibrium. The angle of inclination of the vehicle to the vertical is known as the *angle of heel*. Let

v = linear velocity of vehicle on the track
r = radius of the wheel
R = radius of the track
I_w = moment of inertia of each wheel
I_e = moment of inertia of rotating parts of the engine
m = total mass of the vehicle and the rider

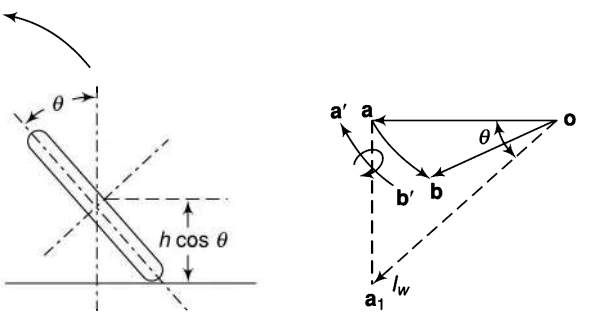

(a) (b)

Fig. 17.12

ω_w = angular velocity of the wheels
ω_e = angular velocity of rotating parts of the engine
G = gear ratio
h = height of centre of mass of the vehicle and the rider
θ = inclination of vehicle to the vertical (angle of heel)

As the axis of spin is not horizontal but inclined to the vertical at an angle θ and the axis of precession is vertical, it is necessary to take the horizontal component of the spin vector.

Spin vector (horizontal) $= I_w \cos\theta$ [See Fig. 17.12(b)]

$$= (2I_w\omega_w + I_e\omega_e)\cos\theta$$

and gyroscopic couple $= (2I_w\omega_w + I_eG\omega_w)\cos\theta\,\omega_p$

$$= (2I_w + GI_e)\frac{v}{r}\frac{v}{R}\cos\theta$$

$$= (2I_w + GI_e)\frac{v^2}{rR}\cos\theta$$

The reaction couple **b′a′** is clockwise when viewed for the rear (back) of the vehicle and tends to overturn it in the outward direction.

Overturning couple due to centrifugal force $= \left(m\dfrac{v^2}{R}\right)h\cos\theta$

$\therefore$ total overturning couple $= (2I_w + GI_e)\dfrac{v^2}{rR}\cos\theta + m\dfrac{v^2}{R}h\cos\theta$

$$= \frac{v^2}{R}\left(\frac{2I_w + GI_e}{r} + mh\right)\cos\theta$$

Rightening (balancing) couple due to the weight of the vehicle $= mg\,h\sin\theta$

For equilibrium, $\dfrac{v^2}{R}\left[\dfrac{2I_w + GI_e}{r} + mh\right]\cos\theta = mg\,h\sin\theta$ (17.8)

From this relation, the angle of heel θ can be determined to avoid skidding of the vehicle.

Example 17.10 *Each wheel of a motorcycle is of 600-mm diameter and has a moment of inertia of 1.2 kg.m². The total mass of the motorcycle and the rider is 180 kg and the combined centre of mass is 580 mm above the ground level when the motor cycle is upright. The moment of inertia of the rotating parts of the engine is 0.2 kg.m². The engine speed is 5 times the speed of the wheels and is in the same sense. Determine the angle of heel necessary when the motorcycle takes a turn of 35 m radius at a speed of 54 km/h.*

Solution

$m = 180$ kg $\quad I_w = 1.2$ kg m²

$r = 0.3$ m $\quad I_e = 0.2$ kg m²

$R = 35$ m $\quad v = \dfrac{54\times1000}{3600} = 15$ m/s

$G = \dfrac{\omega_e}{\omega_w} = 5 \quad h = 0.58$ m

Gyroscopic couple, $C_G = (2I_w + GI_e)\dfrac{v^2}{rR}\cos\theta$

$$= (2\times1.2 + 5\times0.2)\times\frac{(15)^2}{0.3\times35}\times\cos\theta$$

$$= 72.86\cos\theta$$

Centrifugal couple, $C_c = m\dfrac{v^2}{R}h\cos\theta$

$$= 180\times\frac{(15)^2}{35}\times0.58\times\cos\theta$$

$$= 671.14\cos\theta$$

Total overturning couple = (72.86 + 671.14) cos θ = 744 cos θ

Rightening couple = $mg\,h \sin\theta$

$= 180 \times 9.81 \times 0.58 \sin\theta$

$= 1024 \sin\theta$

$\therefore \quad = 1025 \sin\theta = 744 \cos\theta$

or $\tan\theta = \dfrac{744}{1024} = 0.727$

or $\theta = \underline{36°}$

17.8 RIGID DISC AT AN ANGLE FIXED TO A ROTATING SHAFT

Consider a circular disc fixed rigidly to a rotating shaft in such a way that the polar axis of the shaft makes angle θ with the axis of the shaft (Fig. 17.13). Assume that the shaft rotates clockwise with angular velocity ω when viewed along the left end of the shaft.

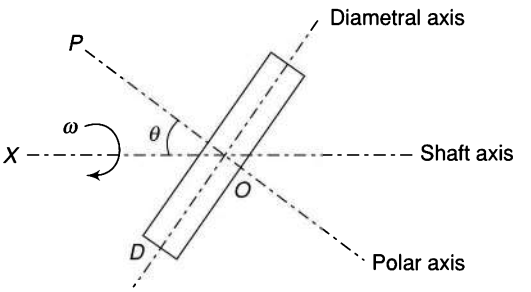

Fig. 17.13

Let

- OX be the axis of the shaft
- OP be the polar axis of the disc and
- OD the horizontal diametral axis of the disc

Also, let m, r and t be the mass, radius and the thickness of the disc.

Then I_p = moment of inertia of disc about polar axis $OP = \dfrac{m.r^2}{2}$

I_d = moment of inertia of disc about diametral axis

$$= m\left(\frac{t^2}{12} + \frac{r^2}{4}\right)$$

$$= \frac{m.r^2}{4}$$ (if the disc is thin and t is neglected)

(i) First consider the spinning about the polar axis [Fig. 17.14(a)].

Angular velocity of spin = Angular velocity of disc about the polar axis $OP = \omega \cos\theta$

Angular velocity of precession

= Angular velocity of disc about the diametric axis $OD = \omega \sin\theta$

$\therefore$ gyroscopic couple $= I_p \times \omega\cos\theta \times \omega\sin\theta$

$= \dfrac{1}{2} I_p \omega^2 \sin 2\theta$

Its effect is to rotate the disc counter-clockwise when viewing from the top.

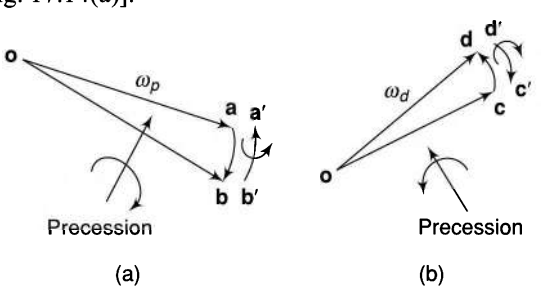

Fig. 17.14

(ii) Now consider the spinning about the diametral axis [Fig. 17.14(b)].

Angular velocity of spin = Angular velocity of disc about the diametral axis $OD = \omega \sin\theta$

Angular velocity of precession = Angular velocity of disc about the polar axis $OP = \omega \cos\theta$

$\therefore$ gyroscopic couple $= I_d \times \omega\sin\theta \times \omega\cos\theta = \dfrac{1}{2} I_d \omega^2 \sin 2\theta$

Its effect is to rotate the disc clockwise when viewing from the top.

(Angular velocity of precession is counter-clockwise when viewing from the right end along *OP*.)

Resultant gyroscopic couple on the disc, $C = \frac{1}{2}(I_p - I_d)\omega^2 \sin 2\theta$

$$= \frac{1}{2}\left(\frac{mr^2}{2} - \frac{mr^2}{4}\right)\omega^2 \sin 2\theta$$

$$= \frac{mr^2}{8}\omega^2 \sin 2\theta$$

Example 17.11 *A uniform disc of 50-kg mass and 800 - mm diameter is mounted on a shaft. The plane of the disc is not perfectly at right angles to the axis of the shaft but has an error of 1.5 degree. Determine the gyroscopic couple acting on the bearing if the shaft rotates at 840 rpm.*

Solution

$$\omega = \frac{2\pi \times 840}{60} = 88 \text{ rad/s}$$

$$C = \frac{mr^2}{8}\omega^2 \sin 2\theta = \frac{50 \times 0.4^2}{8} \times 88^2 \sin 3^\circ$$

$$= 405.3 \text{ N.m}$$

Summary

1. The angular velocity is represented by a vector by drawing the vector parallel to the axis of the rotor and representing the magnitude by the length of the vector to some scale. Sense of rotation of the rotor is denoted by the rule of a right-handed screw, i.e., if a screw is rotated in the clockwise direction, it goes away from the viewer and vice-versa.
2. The axis of spin, the axis of precession and the axis of gyroscopic couple are in three perpendicular planes.
3. The torque required to cause the axis of spin to precess in a plane is known as the *active gyroscopic torque* or the *applied torque*.
4. A *reactive gyroscopic torque* or *reaction torque* tends to rotate the axis of spin in the opposite direction.
5. The effect of the gyroscopic couple on a rotating body is known as the gyroscope effect on the body.
6. A gyroscope is a spinning body which is free to move in other directions under the action of external forces.
7. A four-wheel vehicle tends to turn outwards when taking a turn due to the effects of gyroscopic couple and the centrifugal force.
8. A two-wheel vehicle stabilises itself by tilting towards inside while taking a turn to nullify the effects of gyroscopic couple and the centrifugal force.

Exercises

1. In what way can the angular velocity be represented by a vector?
2. What do you mean by gyroscopic couple? Derive a relation for its magnitude.
3. What do you mean by spin, precession and gyroscopic planes?
4. Explain what is meant by applied torque and reaction torque.
5. Explain in what way the gyroscopic couple affects the motion of an aircraft while taking a turn.
6. Discuss the gyroscopic effect on sea vessels.
7. Explain the gyroscopic effect on four-wheeled vehicles.
8. What is the effect of the gyroscopic couple on the stability of a four wheeler while negotiating a curve? In what way does this effect along with that of the centrifugal force limit the speed of the vehicle?
9. How do the effects of gyroscopic couple and of

centrifugal force make the rider of a two-wheeler tilt on one side? Derive a relation for the limiting speed of the vehicle.

10. A flywheel having a mass of 20 kg and a radius of gyration of 300 mm is given a spin of 500 rpm about its axis which is horizontal. The flywheel is suspended at a point that is 250 mm from the plane of rotation of the flywheel. Find the rate of precession of the wheel. (0.52 rad/s)
11. A disc supported between two bearings on a shaft of negligible weight has a mass of 80 kg and a radius of gyration of 300 mm. The distances of the disc from the bearings are 300 mm to the right from the left-hand bearing and 450 mm to the left from the right-hand bearing. The bearings are supported by thin vertical cords. When the disc rotates at 100 rad/s in the clockwise direction looking from the left-hand bearing, the cord supporting the left-hand side bearing breaks. Find the angular velocity of precession at the instant the cord is cut and discuss the motion of the disc. (0.327 rad/s)
12. The moment of inertia of an aeroplane air screw is 20 kg.m² and the speed of rotation is 1000 rpm clockwise when viewed from the front. The speed of the flight is 200 km per hour. Find the gyroscopic reaction of the air screw on the aeroplane when it makes a left-handed turn on a path of 150-m radius. (775.5 N.m)
13. The rotor of a marine turbine has a moment of inertia of 750 kg.m² and rotates at 3000 rpm clockwise when viewed from aft. If the ship pitches with angular simple harmonic motion having a periodic time of 16 seconds and an amplitude of 0.1 radian, find the
    (i) maximum angular velocity of the rotor axis
    (ii) maximum value of the gyroscopic couple
    (iii) gyroscopic effect as the bow dips

    (0.0393 rad/s; 9261 N.m; bow swings to port (left) as it dips)
14. The turbine rotor of a sea vessel having a mass of 950 kg rotates at 1200 rpm clockwise while looking from the stern. The vessel pitches with an angular velocity of 1.2 rad/s. What will be the gyroscopic couple transmitted to the hull when the bow rises? The radius of gyration of the rotor is 300 mm. (12.89 kN.m)
15. A ship is propelled by a turbine rotor having a mass of 6 tonnes and a speed of 2400 rpm. The direction of rotation of the rotor is clockwise when viewed from the stern. The radius of gyration of the rotor is 450 mm. Determine the gyroscopic effect when the
    (i) ship steers to the left in a curve of 60 m radius at a speed of 18 knots (1 knots = 1860 m/h)
    (ii) ship pitches 7.5 degrees above and 7.5 degrees below the normal position and the bow is descending with its maximum velocity; the pitching motion is simple harmonic with a periodic time of 18 seconds
    (iii) ship rolls and at the instant, its angular velocity is 0.035 rad/s counter-clockwise when viewed from the stern

    Also, find the maximum angular acceleration during pitching.

    (47.33 kN.m, bow is raised; 13.96 kN.m, ship turns towards port side; 10. 69 kN.m, no gyroscopic effect; 0.016 rad/s²)
16. A rear engine automobile is travelling along a curved track of 120 m radius. Each of the four wheels has a moment of inertia of 2.2 kg/m² and an effective diameter of 600 mm. The rotating parts of the engine have a moment of inertia of 1.25 kg.m². The gear ratio of the engine to the back wheel is 3.2. The engine axis is parallel to the rear axle and the crankshaft rotates in the same sense as the road wheels. The mass of the vehicle is 2050 kg and the centre of mass is 520 mm above the road level. The width of the track is 1.6 m. What will be the limiting speed of the vehicle if all the four wheels maintain contact with the road surface? (150.2 km/h)
17. The moment of inertia of a pair of locomotive driving wheels with the axle is 200 kg.m². The distance between the wheel centres is 1.6 m and the diameter of the wheel treads is 1.8 m. Due to defective ballasting, one wheel falls by 5 mm and rises again in a total time of 0.12 seconds while the locomotive travels on a level track at 100 km/h. Assuming that the displacement of the wheel takes place with simple harmonic motion, determine the gyroscopic couple produced and the reaction between the wheel and rail due to this couple. (505 N.m; 315.6 N)
18. Each road wheel of a motor cycle is of 600 mm diameter and has a moment of inertia of 1.1 kg.m². The motorcycle and the rider together weigh 220 kg and the combined centre of mass is 620 mm above the ground level when the motor cycle is upright. The moment of inertia of the rotating parts of the engine is 0.18 kg/m². The engine rotates at 4.5 times the speed of road wheels in the same sense. Find the angle of heel necessary when the motor cycle is taking a turn of 35 m radius at a speed of 72 kg/h. (38.6°)

18 VIBRATIONS

Introduction

A body is said to vibrate if it has a to-and-fro motion. A pendulum swinging on either side of a mean position does so under the action of gravity. When the pendulum swings through the midposition, its centre of mass is at the lowest point and it possesses only kinetic energy. At each extremity of its swing, it has only potential energy. In the absence of any friction, the motion continues indefinitely. It can be shown that if the swings on either side of the mean position are very small, it approximates to simple harmonic motion.

Usually, vibrations are due to elastic forces. Whenever a body is displaced from its equilibrium position, work is done on the elastic constraints of the forces on the body and is stored as stain energy. Now, if the body is released, the internal forces cause the body to move towards its equilibrium position. If the motion is frictionless, the strain energy stored in the body is converted into kinetic energy during the period the body reaches the equilibrium position at which it has maximum kinetic energy. The body passes through the mean position, the kinetic energy is utilised to overcome the elastic forces and is stored in the form of strain energy, and so on.

18.1 DEFINITIONS

(i) ***Free (Natural) Vibrations*** Elastic vibrations in which there are no friction and external forces after the initial release of the body are known as free or natural vibrations.

(ii) ***Damped Vibrations*** When the energy of a vibrating system is gradually dissipated by friction and other resistances, the vibrations are said to be damped. The vibrations gradually cease and the system rests in its equilibrium position.

(iii) ***Forced Vibrations*** When a repeated force continuously acts on a system, the vibrations are said to be forced. The frequency of the vibrations is that of the applied force and is independent of their own natural frequency of vibrations.

(iv) ***Period*** It is the time taken by a motion to repeat itself, and is measured in seconds.

(v) ***Cycle*** It is the motion completed during one time period.

(vi) ***Frequency*** Frequency is the number of cycles of motion completed in one second. It is expressed in hertz (Hz) and is equal to one cycle per second.

(vii) ***Resonance*** When the frequency of the external force is the same as that of the natural frequency of the system, a state of resonance is said to have been reached. Resonance results in large amplitudes of vibrations and this may be dangerous.

18.2 TYPES OF VIBRATIONS

Consider a vibrating body, e.g., a rod, shaft or spring. Figure 18.1 shows a massless shaft, one end of which is fixed and the other end carrying a heavy disc. The system can execute the following types of vibrations.

(i) ***Longitudinal Vibrations*** If the shaft is elongated and shortened so that the same moves up and down resulting in tensile and compressive stresses in the shaft, the vibrations are said to be longitudinal. The different particles of the body move parallel to the axis of the body [Fig.18.1(a)].

(ii) ***Transverse Vibrations*** When the shaft is bent alternately [Fig.18.1(b)] and tensile and compressive stresses due to bending result, the vibrations are said to be transverse. The particles of the body move approximately perpendicular to its axis.

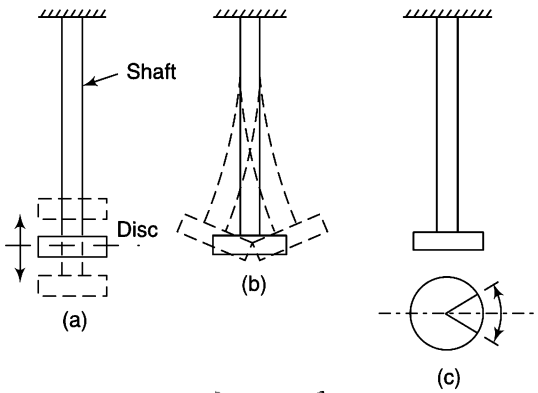

Fig. 18.1

(iii) ***Torsional Vibrations*** When the shaft is twisted and untwisted alternately and torsional shear stresses are induced, the vibrations are known as torsional vibrations. The particles of the body move in a circle about the axis of the shaft [Fig.18.1(c)].

18.3 BASIC FEATURES OF VIBRATING SYSTEMS

For mathematical analysis of a vibratory system, it is necessary to have an *idealized model* of the same which appropriately represents the system.

Basic Elements

For a system to vibrate, it must possess inertial and restoring elements whereas it may possess some damping element responsible for dissipating the energy.

Inertial elements These are represented by lumped masses for rectilinear motion and by lumped moment of inertia for angular motion.

Restoring Elements Massless linear or torsional springs represent the restoring elements for rectilinear and torsional motions respectively.

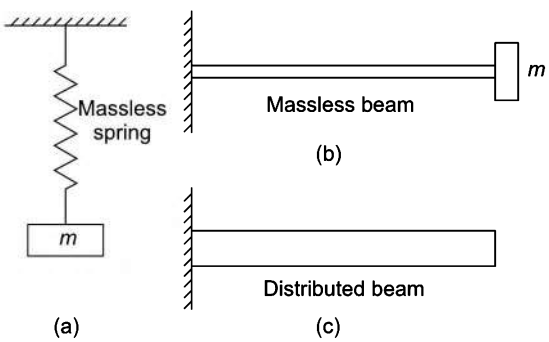

Fig. 18.2

Damping Elements Massless dampers of rigid elements may be considered for energy dissipation in a system.

It is to be noted that lumping of quantities depends upon the distribution of these quantities in the systems. In a spring-mass vibrating system, the spring can be considered massless only if its mass is very less as compared to the suspended mass [Fig.18.2 (a)]. Similarly, if the mass of the beam is negligible as compared to the end mass, lumping is possible [Fig.18.2 (b)], otherwise not [Fig.18.2 (c)].

18.4 DEGREES OF FREEDOM

The number of independent coordinates required to describe a vibratory system is known as its *degree of freedom*. A simple spring-mass system [Fig.18.3 (a)] or a simple pendulum oscillating in one plane [Fig.18.3 (b)] are the examples of single-degree-of-freedom systems. A two-mass, two-spring system constrained to move in one direction [Fig.18.3 (c)], or a double pendulum [Fig.18.3(d)] belong to two-degree-of-freedom systems. A system which has continuously distributed mass such as a string stretched between two supports has infinite degrees of freedom. As such, a system is equivalent to an infinite number of masses concentrated at different points (Fig.18.4).

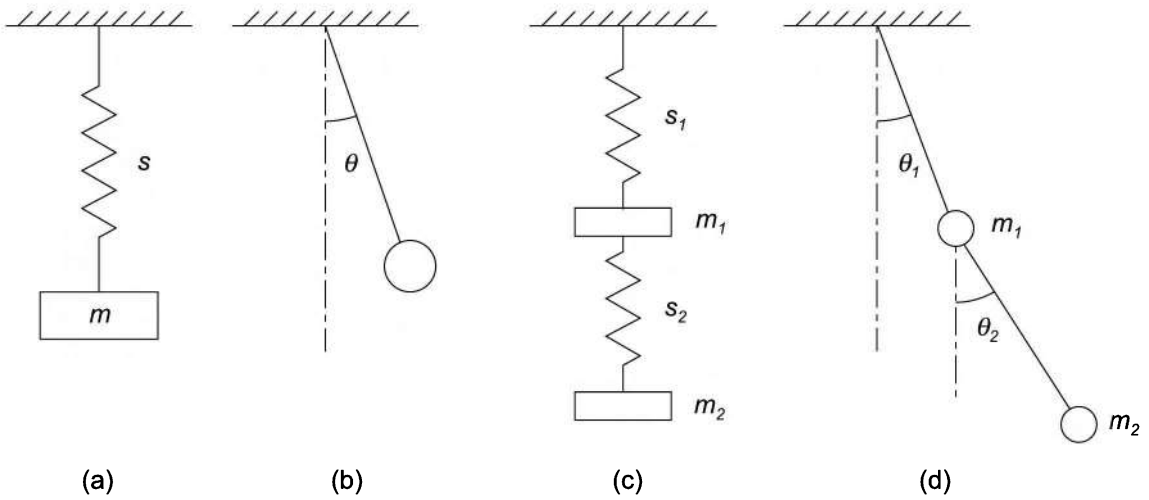

Fig. 18.3

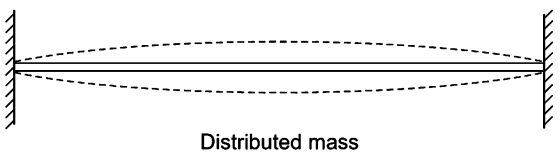

Fig. 18.4

In the following sections, different types of vibrations have been discussed separately.

SECTION-1 (LONGITUDINAL VIBRATIONS)

18.5 FREE LONGITUDINAL VIBRATIONS

The natural frequency of a vibrating system may be found by any of the following methods.

1. Equilibrium Method

It is based on the principle that whenever a vibratory system is in equilibrium, the algebraic sum of forces and moments acting on it is zero. This is in accordance with D′ Alembert's principle that the sum of the inertia forces and the external forces on a body in equilibrium must be zero.

Figure 18.5(a) shows a helical spring suspended vertically from a rigid support with its free end at *A-A*.

If a mass *m* is suspended from the free end, the spring is stretched by a distance Δ and *B-B* becomes the equilibrium position [Fig.18.5(b)]. Thus Δ is the static deflection of the spring under the weight of the mass *m*.

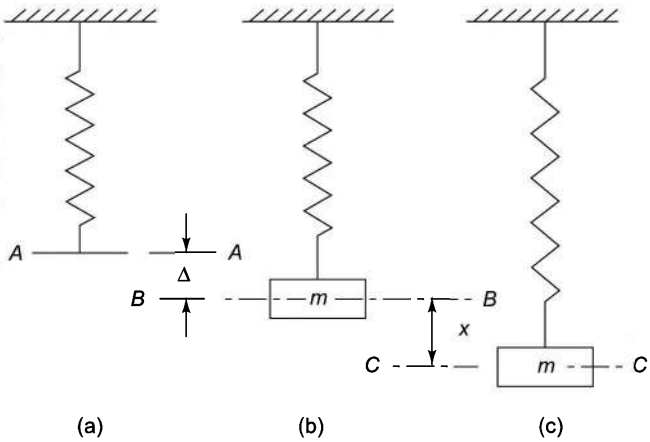

Fig. 18.5

Let *s* = stiffness of the spring under the weight of the mass *m*.

In the static equilibrium position,

upward force = downward force

$$s \times \Delta = mg \tag{18.1}$$

Now, if the mass *m* is pulled farther down through a distance *x* [Fig.18.5(c)], the forces acting on the mass will be

inertia force $= m\ddot{x}$ (upwards)

spring force (restoring force) $= sx$ (upwards)

(x is downward and thus velocity $\dot{x}$ and acceleration $\ddot{x}$ are also downwards)

As the sum of the inertia force and the external force on the body in any direction is to be zero (D′Alembert's principle),

$$m\ddot{x} + sx = 0 \tag{18.2}$$

If the mass is released, it will start oscillating above and below the equilibrium position. The oscillation will continue for ever if there is no frictional resistance to the motion.

The above equation can be written as

$$\ddot{x} + \left(\frac{s}{m}\right)x = 0 \tag{18.3}$$

This is the equation of a simple harmonic motion and is analogous to

$$\ddot{x} + \omega_n^2 x = 0 \tag{18.4}$$

The solution of which is given by

$$x = A \sin \omega_n t + B \cos \omega_n t \tag{18.5}$$

where A and B are the constants of integration and their values depend upon the manner in which the vibration starts. By making proper substitutions, other forms of the solution can also be obtained as follows:

- By assuming $A = X \cos \varphi$ and $B = X \sin \varphi$,

$$x = X (\sin \omega_n t \cos \varphi + \cos \omega_n t \sin \varphi)$$

$$x = X \sin (\omega_n t + \varphi) \tag{18.6}$$

  where X and φ are the constants and have to be found from initial conditions.

- By assuming $A = X \sin \psi$ and $B = X \cos \psi$,

$$x = X (\sin \omega_n t \sin \psi + \cos \omega_n t \cos \psi)$$

$$x = X \cos (\omega_n t - \psi) \tag{18.7}$$

  where X and ψ are the constants and have to be found from initial conditions.

  The above solutions show that the system vibrates with frequency

$$\omega_n = \sqrt{\frac{s}{m}} \tag{18.8}$$

  which is known as the *natural circular frequency* of vibration.

  As one cycle of motion is completed in an angle 2π, the period of vibration is

$$T = \frac{2\pi}{\omega_n} = 2\pi\sqrt{\frac{m}{s}} \tag{18.9}$$

  and *natural linear frequency* of the vibrating system,

$$f_n = \frac{1}{T} = \frac{1}{2\pi}\sqrt{\frac{s}{m}} \tag{18.10}$$

  In general, the words 'circular' or 'linear' are not used in *natural circular frequency* or in *natural linear frequency.* Both are known as *natural frequencies* of vibration and are distinguished by their units.

  Now let us consider different manners of starting the motion.

(i) If the motion is started by displacing the mass through a distance x_o and giving a velocity v_o then for the solution of Eq. 18.5,

$$t = 0, \quad x = x_o \quad \text{and} \quad \dot{x} = v_o$$

and the constants A and B can be found as below:

$$x_o = A(0) + B(1) \quad \text{or} \quad B = x_o$$

Taking the time derivative of Eq. 18.5,

$$\dot{x} = A\,\omega_n \cos\omega_n t - B\,\omega_n \sin \omega_n t \tag{18.11}$$

Thus, $$v_o = A\,\omega_n (1) - B\,\omega_n (0) \quad \text{or} \quad A = \frac{v_o}{\omega_n}$$

Thus Eq. (i) can be written as

$$x = \frac{v_o}{\omega_n} \sin \omega_n t + x_o \cos \omega_n t \tag{18.12}$$

which is the general form of the solution.

The solution is represented graphically in Fig. 18.6.

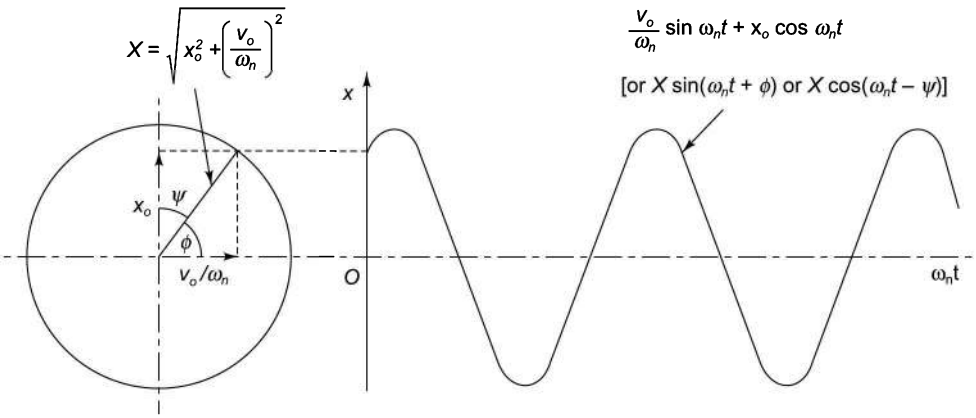

Fig. 18.6

- For the solution of Eq. 18.6 with the same initial conditions, we have

$$x = X \sin(\omega_n t + \varphi) \tag{i}$$

Taking the time derivative of Eq. 18.6,

$$\dot{x} = X\,\omega_n \cos(\omega_n t + \varphi) \tag{18.13}$$

$$v_o = X\omega_n \cos\varphi \quad \text{or} \quad \frac{v_o}{\omega_n} = X \cos\varphi \tag{ii}$$

Squaring and adding (i) and (ii),

$$X = \sqrt{x_o^2 + \left(\frac{v_o}{\omega_n}\right)^2}$$

Dividing (i) by (ii)

$$\tan\phi = \frac{x_o\omega_n}{v_o} \quad \text{or} \quad \phi = \tan^{-1}\frac{x_o\omega_n}{v_o}$$

Thus the equation can be written as

$$x = \sqrt{x_o^2 + \left(\frac{v_o}{\omega_n}\right)^2}\ \sin(\omega_n t + \varphi) \tag{18.14}$$

The solution is represented graphically in Fig. 18.6.

- In a similar way, the solution of Eq. 18.7 can be written as

$$x = \sqrt{x_o^2 + \left(\frac{v_o}{\omega_n}\right)^2}\ \cos(\omega_n t - \psi) \tag{18.15}$$

where ψ is given by, $\psi = \tan^{-1}\dfrac{v_o}{x_o\omega_n}$

The solution is represented graphically in Fig. 18.6.

(ii) If the motion is started by displacing the mass through a distance x_o and then releasing it then at

$t = 0, \quad x = x_o \quad$ and $\quad \dot{x} = 0$

Thus from Eqs 18.5 and 18.11,

$$x_o = A(0) + B\,(1) \qquad \text{or} \qquad B = x_o$$

and $\quad 0 = A\,\omega_n\,(1) - B\,\omega_n\,(0) \quad$ or $\quad A = 0$

The equation of motion

$$x = x_o \cos \omega_n t \tag{18.16}$$

The solution is represented graphically in Fig. 18.7.

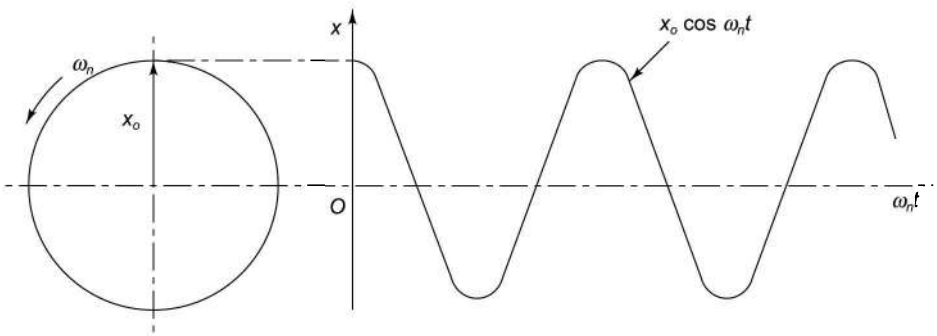

Fig. 18.7

- For the solution of Eq. 18.6, for the same initial conditions,

$x_o = X \sin \varphi$ (i)

$0 = X\,\omega_n \cos \varphi$ (ii) (from Eq. 18.13)

or $\quad \cos \phi = 0 \quad$ (X and ω_n cannot be zero)

or $\quad \phi = 90^\circ$

Therefore from (i), $\quad X = x_o$

and the equation of motion,

$$x = X \sin (\omega_n t + 90^\circ)$$

or

$$x = x_o \cos \omega_n t$$

i.e., the same equation as Eq. 18.16.

- For the solution of Eq. 18.7 and for the same initial conditions, the equation of motion can be obtained which will be same as Eq. 18.16.

(iii) If the motion is started by providing a velocity of v_o at the equilibrium position then at

$t = 0, \quad x = 0 \quad$ and $\quad \dot{x} = v_o$

Then constants can be found as before from Eqs 18.5 and 18.11, i.e.,

$0 = A(0) + B\,(1) \qquad$ or $\qquad B = 0$

and $\quad v_o = A\,\omega_n\,(1) - B\,\omega_n\,(0) \quad$ or $\quad A = \dfrac{v_o}{\omega_n}$

The equation of motion

$$x = \frac{v_o}{\omega_n} \sin \omega_n t \tag{18.17}$$

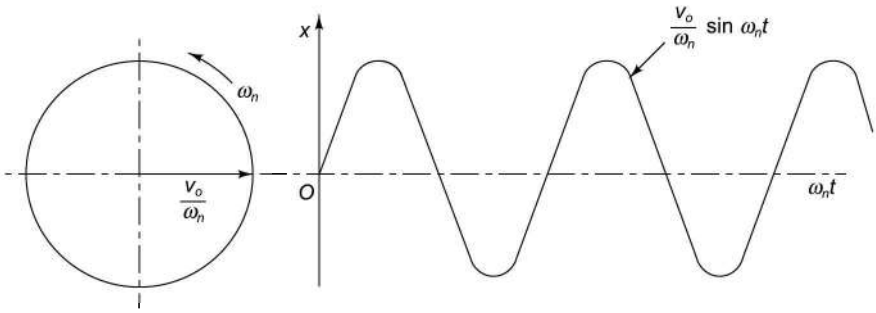

Fig. 18.8

The solution is represented graphically in Fig. 18.8.

- For the sol of Eq. 18.6 and for the same initial conditions

$$0 = X \sin \varphi \quad \text{or} \quad \phi = 0^o$$

and $\quad \dot{x} = X\,\omega_n \cos(\omega_n t + \varphi)$

or $\quad v_o = X\,\omega_n \qquad (\phi = 0)$

or $\quad X = \dfrac{v_o}{\omega_n}$

Therefore, equation of motion, $x = \dfrac{v_o}{\omega_n} \sin \omega_n t$

which is the same equation as Eq. 18.17.

- For the solution of Eq. 18.7 and for the same initial conditions, the equation of motion can be obtained which will be same as Eq. 18.17.

Equation 18.6 is considered a more convenient form of the equation. In this equation, the coefficient is the *amplitude* (maximum displacement) of the vibration. φ is called the *phase angle* and is the angular advance of the vector with respect to the sine function.

Equation 18.7 is also a convenient form of the equation.

2. Energy Method

In a conservative system (a system with no damping), the total mechanical energy, i.e., the sum of the kinetic and the potential energies, remains constant and therefore,

$$\frac{d}{dt}(KE + PE) = 0$$

We have

$$KE = \frac{1}{2} m\,\dot{x}^2$$

and

$$PE = \text{mean force} \times \text{displacement}$$

$$= \frac{0 + sx}{2} \times x$$

$$= \frac{sx^2}{2}$$

$$\frac{d}{dt}\left(\frac{1}{2}m\dot{x}^2 + \frac{sx^2}{2}\right) = 0$$

or $$\frac{1}{2}m \times 2\dot{x}\ddot{x} + \frac{1}{2}s \times 2x\dot{x} = 0$$

or $$m\ddot{x} + sx = 0$$

or $$\omega_n = \sqrt{\frac{s}{m}}$$

3. Rayleigh's Method

In this method, the maximum kinetic energy at the mean position (where potential energy is zero) is made equal to the maximum potential (or strain energy) at the extreme position (where the kinetic energy is zero).

Let the motion be simple harmonic.

Therefore, $x = X \sin \omega_n t$

where X = maximum displacement from the mean position to the extreme position.

$\therefore$ $$\dot{x} = \omega_n X \cos \omega_n t, \qquad \dot{x}_{\max} = \omega_n t$$

or KE at mean position = PE at extreme position

i.e. $$\frac{1}{2}m(\omega_n X)^2 = \frac{1}{2}sX^2$$

or $m\omega_n^2 = s$ or $\omega_n = \sqrt{\frac{s}{m}}$

In *vertical vibrating systems*, the system vibrates about the static equilibrium position assumed by the mass after its suspension, i.e., about position *B-B* (Fig. 18.5). In case of *horizontal vibrating systems* (Fig. 18.9), however, the gravity has no effect on its motion and thus the system vibrates about the original equilibrium position.

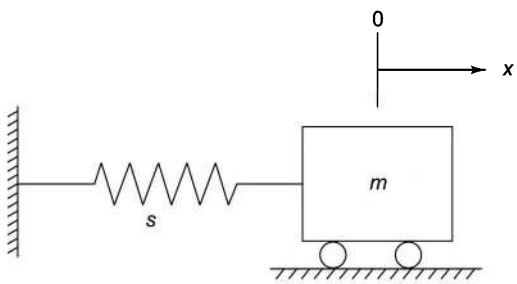

Fig. 18.9

18.6 DISPLACEMENT, VELOCITY AND ACCELERATION

The displacement of the mass m from the mean position at any instant is

$$x = X \sin(\omega_n t + \varphi) \qquad \text{(Eq. 18.6)}$$

Also velocity,

$$v = \dot{x} = X\omega_n \cos(\omega_n t + \varphi)$$
$$= X\omega_n \sin\left[\frac{\pi}{2} + (\omega_n t + \varphi)\right]$$

and acceleration,

$$f = \ddot{x} = -X\omega_n^2 \sin(\omega_n t + \varphi)$$
$$= X\omega_n^2 \sin[\pi + (\omega_n t + \varphi)]$$

These relationships indicate that the velocity vector leads the displacement vector by $\pi/2$ and the acceleration vector leads the displacement vector by π (Fig. 18.10).

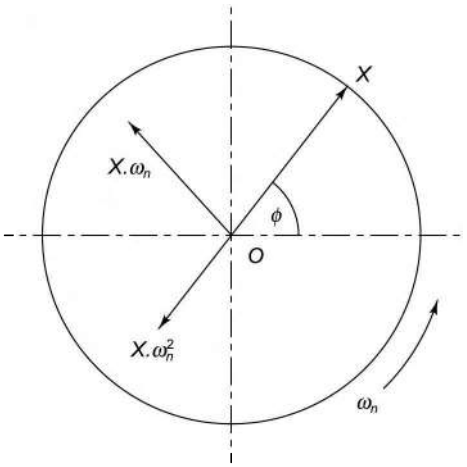

Fig. 18.10

18.7 INERTIA EFFECT OF THE MASS OF SPRING

So far, the mass of the spring and thus the effect of inertia have been neglected. The same may be taken into account as follows:

Let m' = mass of the spring wire per unit length

v = velocity of the free end of the spring at the instant under consideration

l = total length of the spring wire

Consider an element of length δy at a length y measured round the coils from the fixed end.

KE of the element $= \frac{1}{2} \times$ mass of element $\times$ (velocity of element)^2

$$= \frac{1}{2}(m'\delta y) \times \left(\frac{y}{l} v\right)^2$$

KE of the spring

$$= \int_0^l \frac{1}{2} m'v^2 \left(\frac{y}{l}\right)^2 dy$$

$$= \frac{1}{2}\frac{m'v^2}{l^2}\int_0^l y^2.dy = \frac{1}{2}\frac{m'v^2}{l^2}\frac{l^3}{3}$$

$$= \frac{1}{3}\frac{1}{2}(m'l)v^2$$

$$= \frac{1}{3} \times \left[\frac{1}{2} \times \text{mass of spring} \times (\text{velocity of free end})^2\right]$$

$$= \frac{1}{3} \times KE \text{ of a mass equal to that of the spring moving with the same velocity as the free end}$$

This shows that the inertia effect of the spring is equal to that of a mass one third of the mass of the spring, concentrated at its free end.

Thus

equivalent mass at the free end $= m + \frac{m_1}{3}$

where

m_1 = mass of the spring

$$f_n = \frac{1}{2}\sqrt{\frac{s}{m + \frac{m_1}{3}}} \tag{18.18}$$

It can be noted that the net force on the spring at any instant tending to restore the vibrating mass to the equilibrium position is sx which is proportional to the displacement of the mass. This is true for any vibration due to the elastic forces. Thus in a vibrating system in which the restoring force is proportional to the displacement from the equilibrium position, the frequency of the system will always be given by

$$f_n = \frac{1}{2\pi}\sqrt{\frac{s}{m}} = \frac{1}{2\pi}\sqrt{\frac{mg/\Delta}{m}} = \frac{1}{2\pi}\sqrt{\frac{g}{\Delta}} \tag{18.19}$$

where Δ is the static deflection under the suspended mass m.

For example, consider a rod of length l suspended vertically. A mass m is suspended at the free end [Fig. 18.1(a)].

Then

Static deflection, $\Delta = \frac{mgl}{AE}$

where

A = cross-sectional area of the rod

l = length of the rod

E = Young's modulus of the rod material.

Frequency,

$$f_n = \frac{1}{2\pi}\sqrt{\frac{gAE}{mgl}} = \frac{1}{2\pi}\sqrt{\frac{AE}{ml}}$$

However, if the mass of the suspended rod is also to be considered,

$$f_n = \frac{1}{2\pi}\sqrt{\frac{AE}{\left(m + \frac{1}{3}m_1\right)l}}$$

where m_1 = mass of rod

Example 18.1 *Determine the equivalent spring stiffness and the natural frequency of the following vibrating systems when [refer to Figs 18.11(a) to (e)] the*

(a) mass is suspended to a spring
(b) mass is suspended at the bottom of two springs in series
(c) mass is fixed in between two springs
(d) mass is fixed to the midpoint of a spring
(e) mass is fixed to a point on a bar joining free ends of two springs.

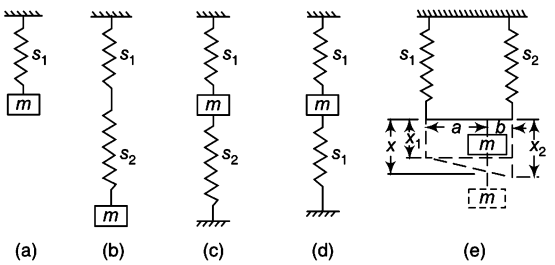

Fig. 18.11

Take

$s_1 = 5$ N/mm, $s_2 = 8$ N/mm
$m = 10$ kg, $a = 20$ mm and $b = 12$ mm

Solution

(a) As there is only one spring, the equivalent spring stiffness is the same, i.e., $s = s_1 = 5$ N/mm

$$f_n = \frac{1}{2\pi}\sqrt{\frac{s_1}{m}} = \frac{1}{2\pi}\sqrt{\frac{5\times10^3}{10}} = \underline{3.56 \text{ Hz}}$$

(b) Spring force will be the same in the two springs but static deflections will be different.

Let s = equivalent spring stiffness of the two springs.

Deflection of mass m = deflection of Spring 1 + deflection of Spring 2

$$\frac{mg}{s} = \frac{mg}{s_1} + \frac{mg}{s_2}$$

or

$$\frac{1}{s} = \frac{1}{s_1} + \frac{1}{s_2}$$

or

$$s = \frac{s_1 s_2}{s_1 + s_2}$$

$$f_n = \frac{1}{2\pi}\sqrt{\frac{s}{m}} = \frac{1}{2\pi}\sqrt{\frac{s_1 s_2}{(s_1+s_2)m}}$$

$$= \frac{1}{2\pi}\sqrt{\frac{(5\times10^3)\times(8\times10^3)}{(5+8)\times10^3\times10}} = \underline{2.79 \text{ Hz}}$$

(c) The spring forces will be different but the deflections will be the same of the two springs and the mass m.

Let Δ = deflection of each spring and of mass m.

Net spring force = spring force in 1 + spring force in 2

$s\Delta = s_1\Delta + s_2\Delta$

or $s = s_1 + s_2 = 5 + 8 = 13$ N/mm

$$f_n = \frac{1}{2\pi}\sqrt{\frac{s}{m}} = \frac{1}{2\pi}\sqrt{\frac{13\times10^3}{10}} = \underline{5.74 \text{ Hz}}$$

(d) The spring stiffness of a coiled spring is inversely proportional to the number of coils in the spring. As the mass is fixed at the midpoint, the number of coils becomes half on each side.

Stiffness of spring on each side $= \dfrac{s_1}{1/2} = 2s_1$

Now the system is similar to case (iii).

Equivalent spring stiffness,

$s = 2s_1 + 2s_1 = 4s_1$

$$f_n = \frac{1}{2\pi}\sqrt{\frac{4s_1}{m}} = \frac{1}{2\pi}\sqrt{\frac{4\times5\times10^3}{10}} = \underline{7.12 \text{ Hz}}$$

(e) Spring forces as well as the static deflections of two springs will be different.

Spring force in 1 $= mg\dfrac{b}{a+b}$

Spring force in 2 $= mg\dfrac{a}{a+b}$

Deflection of 1, $\Delta_1 = mg\dfrac{b}{a+b}\dfrac{1}{s_1}$

Deflection of 2, $\Delta_2 = mg\dfrac{a}{a+b}\dfrac{1}{s_2}$

Assuming that the deflection of 2 is more than that of 1, deflection of mass m,

$$\Delta = \Delta_2 - (\Delta_2 - \Delta_1)\frac{b}{a+b}$$

$$= mg\left[\frac{a}{a+b}\frac{1}{s_2} - \left(\begin{array}{c}\dfrac{a}{a+b}\dfrac{1}{s_2}\\ -\dfrac{a}{a+b}\dfrac{1}{s_1}\end{array}\right)\frac{b}{a+b}\right]$$

$$= \frac{mg}{a+b}\left[\frac{a}{s_2} - \frac{ab}{(a+b)s_2} + \frac{b^2}{(a+b)s_1}\right]$$

$$= \frac{mg}{a+b}\left[\frac{a^2 s_1 + abs_1 - abs_1 + b^2 s_2}{(a+b)s_1 s_2}\right]$$

$$= \frac{mg}{(a+b)^2}\left[\frac{a^2}{s_2} + \frac{b^2}{s_1}\right]$$

Total spring force = force in Spring 1 + force in Spring 2

$s\,\Delta = s_1\,\Delta_1 + s_2\,\Delta_2$

$$s\frac{mg}{(a+b)^2}\left[\frac{a^2}{s_2} + \frac{b^2}{s_2}\right] = s_1 mg\frac{b}{a+b} \times \frac{1}{s_1} + s_2 mg\frac{a}{a+b} \times \frac{1}{s_2}$$

$$s\frac{1}{a+b}\left(\frac{a^2}{s_2} + \frac{b^2}{s_1}\right) = b + a$$

or

$$s = \frac{(a+b)^2}{\left(\dfrac{a^2}{s_2} + \dfrac{b^2}{s_1}\right)}$$

$$f_n = \frac{1}{2\pi}\sqrt{\frac{(a+b)^2}{\left(\dfrac{a^2}{s_2} + \dfrac{b^2}{s_1}\right)m}}$$

$$= \sqrt{\frac{(0.02+0.012)^2}{\dfrac{(0.02)^2}{8\times10^3} + \dfrac{(0.012)^2}{5\times10^3}} \times \frac{1}{10}} = \underline{36\text{ Hz}}$$

Alternatively,

$$f_n = \frac{1}{2\pi}\sqrt{\frac{g}{\Delta}} = \frac{1}{2\pi}\sqrt{\frac{g}{\dfrac{mg}{(a+b)^2}\left(\dfrac{a^2}{s_2} + \dfrac{b^2}{s_1}\right)}}$$

$$= \frac{1}{2\pi}\sqrt{\frac{(a+b)^2}{\left(\dfrac{a^2}{s_2} + \dfrac{b^2}{s_1}\right)m}}$$

i.e., the same expression.

Example 18.2 *Determine the frequency (circular) of vibration of the systems shown in Figs 18.12(a) and (b). Neglect the mass of the pulleys.*

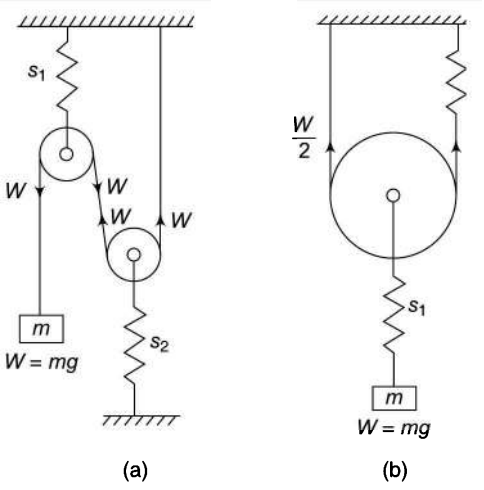

Fig. 18.12

Solution

(a) Force in each spring = $2W$

Deflection on mass m, Δ = 2 (deflection of Spring 1 + deflection of Spring 2)

$$= 2\left(\frac{2W}{s_1} + \frac{2W}{s_2}\right)$$

$$= 4mg\left(\frac{s_1 + s_2}{s_1 s_2}\right)$$

$$\omega_n = \frac{g}{\Delta} = \sqrt{\frac{g(s_1 s_2)}{4mg(s_1+s_2)}} = \sqrt{\frac{s_1 s_2}{4(s_1+s_2)m}}$$

(b) Force in Spring 1 = W

Force in Spring 2 = $W/2$

Deflection of mass = deflection of Spring 1 + deflection of Spring 2

$$= \frac{W}{s_1} + \frac{1}{2}\frac{W/2}{s_2}$$

$$= mg\left(\frac{1}{s_1} + \frac{1}{4s_2}\right)$$

$$= mg\left(\frac{4s_2 + s_1}{4s_1 s_2}\right)$$

$$\omega_n = \sqrt{\frac{g}{\Delta}} = \sqrt{\frac{4s_1 s_2}{(s_1 + 4s_2)m}}$$

Example 18.3 *Determine the equation of vibration of the water column in a U-tube shown in Fig. 18.13.*

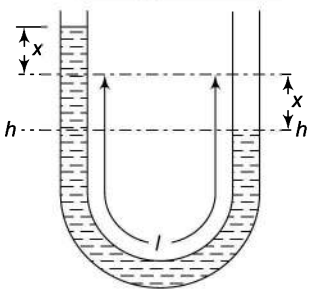

Fig. 18.13

Solution (a) *Newton's Method*

Let a = area of cross section of the tube

ρ = mass density of water

l = total length of water column

Inertia force + External force = 0

Mass × Acceleration + Weight of water column above $h - h = 0$

$$(al\,\rho) \times \ddot{x} + (a \times 2x)\,\rho\, g = 0$$

or

$$\ddot{x} + \frac{2g}{l}x = 0$$

Energy Method At any instant,

$$\frac{d}{dt}(KE + PE) = 0$$

$$KE = \frac{1}{2}mv^2 = \frac{1}{2}(al\rho)\dot{x}^2$$

PE = Work to transfer a water column of length x from the right-hand side to the left-hand side.

$$= mg\,x$$
$$= (a\,x\,\rho)\,g\,x$$
$$= a\,\rho\,g\,x^2$$

$$\frac{d}{dt}\left(\frac{1}{2}al\,\rho\,\dot{x}^2 + a\,\rho\,g\,x^2\right) = 0$$

$$\frac{1}{2}\,a\,l\,\rho \times 2\,\dot{x}\ddot{x} + a\,\rho\,g \times 2\,x\dot{x} = 0$$

$$\ddot{x} + \frac{2g}{l}x = 0 \quad \omega_n = \sqrt{\frac{2g}{l}}$$

Example 18.4 *Determine the natural frequency of a vibrating system shown in Fig. 18.14.*

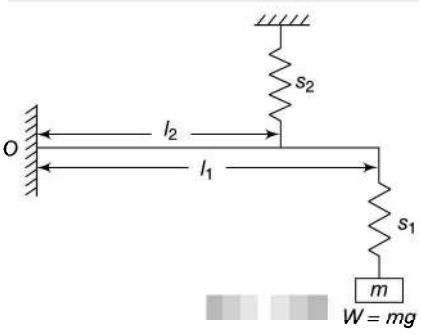

Fig. 18.14

Solution Force in spring 1, $F_1 = W$

Force in spring 2, $F_2 = W\dfrac{l_1}{l_2}$ $\quad (F_1 \times l_1 = F_2 \times l_2)$

Deflection of mass = deflection of Spring 1 + (deflection of Spring 2) $\dfrac{l_1}{l_2}$

$$\Delta = \frac{W}{s_1} + \frac{l_1}{l_2} \times \frac{(Wl_1/l_2)}{s_2} = W\left[\frac{l}{s_1} + \frac{(l_1/l_2)^2}{s_2}\right]$$

$$= mg\left[\frac{s_2 + s_1(l_1/l_2)^2}{s_1 s_2}\right]$$

$$\omega_n = \sqrt{\frac{g}{\Delta}} = \sqrt{\frac{s_1 s_2}{[s_1(l_1/l_2)^2 + s_2]m}}$$

$$= \sqrt{\frac{s_1 s_2 (l_2/l_1)^2}{[s_1 + s_2(l_2/l_1)^2]m}}$$

18.8 DAMPED VIBRATIONS

When an elastic body is set in vibratory motion, the vibrations die out after some time due to the internal molecular friction of the mass of the body and the friction of the medium in which it vibrates.

The diminishing of vibrations with time is called *damping*. External damping can be increased by using dashpots or dampers. A dashpot has a piston which moves in a cylinder filled with some fluid. Shock absorbers, fitted in the suspension system of a motor vehicle, reduce the movement of the springs when there are sudden shocks, thus damping out the bouncing which could have occurred otherwise.

As before, consider a helical spring suspended from a fixed support (Fig. 18.15). *A-A* is the level of the free end before the mass *m* is suspended. *B-B* is the level of static equilibrium under the weight of the mass. The mass is attached to a dashpot to retard its movement.

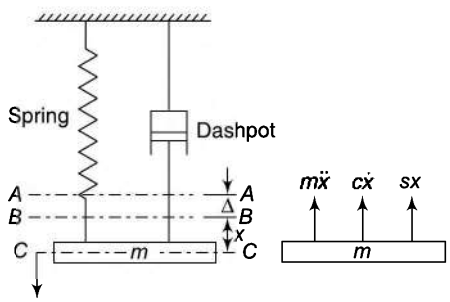

Fig. 18.15

It is usual to assume that the damping force is proportional to the velocity of vibration at lower values of speed and proportional to the square of the velocity at higher speeds. Only the former case will be considered in this chapter.

Consider the forces on the mass *m* when it is displaced through a distance below the equilibrium position during vibratory motion.

Let s = stiffness of the spring

c = damping coefficient (damping force per unit velocity)

ω_n = frequency of natural undamped vibrations

x = displacement of mass from mean position at time t

$v = \dot{x}$ = velocity of the mass at time t

$f = \ddot{x}$ = acceleration of the mass at time t

When the mass moves downwards, the friction force of the dashpot acts in the upward direction.

Now, the forces acting on the mass are

- Inertia $= m\ddot{x}$ (upwards)
- Damping force $= c\dot{x}$ (upwards)
- Spring force (restoring force) $= sx$ (upwards)

As the sum of the inertia force and the external forces on a body in any direction is to be zero,

$$m\ddot{x} + c\dot{x} + sx = 0$$

or

$$\ddot{x} + \frac{c}{m}\dot{x} + \frac{s}{m}x = 0 \tag{18.20}$$

It is a differential equation of the second order. Its solution will be of the form

$$x = Ae^{\alpha_1 t} + Be^{\alpha_2 t} \tag{18.21}$$

where A and B are some constants, α_1 and α_2 are the roots of the auxiliary equation

$$\alpha^2 + \frac{c}{m}\alpha + \frac{s}{m} = 0 \tag{18.22}$$

i.e.,

$$\alpha_{1,2} = -\frac{c}{2m} \pm \sqrt{\left(\frac{c}{2m}\right)^2 - \left(\frac{s}{m}\right)} \tag{18.23}$$

The ratio of $\left(\frac{c}{2m}\right)^2$ to $\left(\frac{s}{m}\right)$ represents the degree of dampness provided in the system and its square root is known as *damping factor* or *damping ratio* ζ, i.e.

$$\zeta = \sqrt{\frac{(c/2m)^2}{s/m}} = \frac{c}{2\sqrt{sm}}$$

or

damping coefficient,

$$c = 2\zeta\sqrt{sm} = 2\zeta m\omega_n = 2\zeta\frac{s}{\omega_n} \tag{18.24}$$

When $\zeta = 1$, the damping is known as critical. The corresponding value of damping coefficient c is denoted by c_c.

Thus under critical damping conditions,

$$c = 2\sqrt{sm} = 2m\omega_n = 2s/\omega_n \tag{18.25}$$

and

$$\zeta = \frac{c}{c_c} = \frac{\text{Actual damping coefficient}}{\text{Critical damping coefficient}} \tag{18.26}$$

Thus when

$\zeta = 1$, the damping is critical

$\zeta > 1$, the system is over-damped

$\zeta < 1$, the system is under-damped

Equation (18.20) can also be written as

$$\ddot{x} + 2\zeta\,\omega_n\dot{x} + \omega_n^2 x = 0 \tag{18.27}$$

and

$$\alpha_{1.2} = -\zeta\omega_n \pm \sqrt{\zeta^2\omega_n^2 - \omega_n^2}$$

$$= (-\zeta \pm \sqrt{\zeta^2 - 1})\omega_n$$

The exact solution of Eq. (18.27) will depend upon whether the roots $\alpha_{1,2}$ are real or imaginary.

(i) $\zeta > 1$, i.e., the system is over-damped.

The roots of the auxiliary equation are real.

$$\alpha_{1.2} = (-\zeta \pm \sqrt{\zeta^2 - 1})\omega_n$$

Therefore, the solution is

$$x = Ae^{\alpha_1 t} + Be^{\alpha_2 t}$$

$$= Ae^{(-\zeta+\sqrt{\zeta^2-1})\omega_n t} + Be^{(-\zeta-\sqrt{\zeta^2-1})\omega_n t} \tag{18.28}$$

Constants A and B can be determined from the initial conditions. This is the equation of an aperiodic motion, i.e., the system cannot vibrate due to over-damping. The magnitude of the resultant displacement approaches zero with time.

(ii) $\zeta < 1$, i.e., the system is underdamped.

The roots of the auxiliary equation are imaginary.

$$\alpha_{1,2} = (-\zeta \pm i\sqrt{1-\zeta^2})\omega_n$$

$$\therefore \quad x = Ae^{(-\zeta+i\sqrt{1-\zeta^2})\omega_n t} + Be^{(-\zeta-i\sqrt{1-\zeta^2})\omega_n t}$$

$$= e^{-\zeta\omega_n t}\left[Ae^{(i\sqrt{1-\zeta^2})\omega_n t} + Be^{(-i\sqrt{1-\zeta^2})\omega_n t}\right]$$

Put

$$\sqrt{1-\zeta^2}\,\omega_n = \omega_d$$

Then

$$x = e^{-\zeta\omega_n t}[Ae^{i\omega_d t} + Be^{-i\omega_d t}]$$

$$= e^{-\zeta\omega_n t}[A(\cos\omega_d t + i\sin\omega_d t) + B(\cos\omega_d t - i\sin\omega_d t)]$$

$$= e^{-\zeta\omega_n t}[(A+B)\cos\omega_d t + i(A-B)\sin\omega_d t]$$

$$= e^{-\zeta\omega_n t}[C\cos\omega_d t + D\sin\omega_d t] \tag{18.29}$$

where

$$C = A + B \qquad \text{and} \qquad D = i\,(A-B)$$

Constants C and D can be found from initial conditions. Alternatively, put

$$A + B = X\sin\varphi \qquad \text{and} \qquad i\,(A-B) = X\cos\varphi$$

Thus

$$x = e^{-\zeta\omega_n t}(X\sin\varphi\cos\omega_d t + X\cos\varphi\sin\omega_d t)$$

$$= Xe^{-\zeta\omega_n t}\sin(\omega_d t + \varphi) \tag{18.30}$$

Constants X and φ are to be determined from initial conditions. This equation indicates that the system oscillates with frequency $\omega_d (= \sqrt{1-\zeta^2}\,\omega_n)$. As ζ is less than 1, ω_d is always less than ω_n.

The solution consists of three terms:

- X, which is constant
- $e^{-\zeta\omega_n t}$, which decreases with time and finally $e^{-\infty} = 0$
- $\sin(\omega_d t + \varphi)$ which represents a repetition of motion

Thus, the resultant motion is oscillatory with decreasing amplitudes having a frequency of ω_d. Ultimately, the motion dies down with time.

Also,

$$\text{linear frequency, } f_d = \frac{\omega_d}{2\pi}$$

and

$$\text{time period, } T_d = \frac{\omega_d}{2\pi}$$

let X_0 = displacement at the start of motion when $t = 0$

X_1 = displacement at the end of first oscillation when $t = T_d$

$$= Xe^{-\zeta\omega_n T_d} \sin(\omega_d T_d + \varphi)$$

$$= Xe^{-\zeta\omega_n T_d} \sin\left(\omega_d \frac{2\pi}{\omega_d} + \varphi\right)$$

$$= Xe^{-\zeta\omega_n T_d} \sin\varphi$$

X_2 = displacement at the end of second oscillation

$$= Xe^{-\zeta\omega_n \times 2T_d} \sin\varphi$$

Similarly,

$$X_3 = Xe^{-\zeta\omega_n \times 3T_d} \sin\varphi$$

.....

$$X_n = Xe^{-\zeta\omega_n \times nT_d} \sin\varphi$$

$$X_{n+1} = Xe^{-\zeta\omega_n \times (n+1)T_d} \sin\varphi$$

Then

$$\frac{X_n}{X_{n+1}} = e^{\zeta\omega_n T_d} = \frac{X_0}{X_1} = \frac{X_1}{X_2} = \frac{X_2}{X_3} = \ldots \tag{18.31}$$

which shows that the ratio of amplitudes of two successive oscillations is constant (Fig. 18.16).

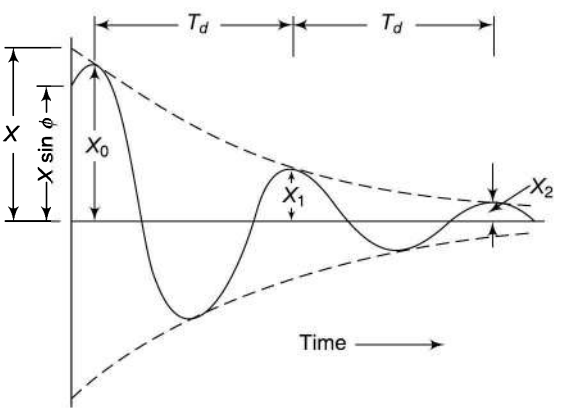

Fig. 18.16

(iii) $\zeta = 1$, i.e., the damping is critical.

The roots of the auxiliary equation are equal, each being equal to $-\omega_n$ and the solution is

$$x = (A + Bt)\ e^{-\omega_n t} \tag{18.32}$$

Since $e^{-\omega_n t}$ approaches zero as $t \to \infty$, the motion is aperiodic. The displacement will be approaching to zero with time.

Figure 18.17 shows the characteristics of motion for the three different cases discussed. The diagram shows that in a critically damped system, the displaced mass returns to the position of rest in the shortest possible time without oscillation. Due to this reason, large guns are critically damped so that they return to their original position (after recoiling because of firing) in the minimum possible time. If the gun barrels are over-damped, they will take more time to return to their original positions.

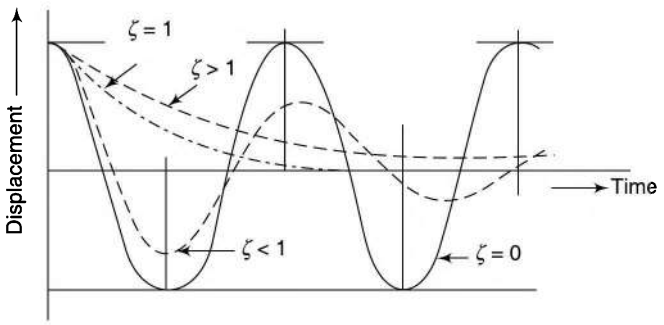

Fig. 18.17

The following points can be noted:

(i) An undamped system ($\zeta = 0$) vibrates at its frequency which depends upon the static deflection under the weight of its mass ($\omega_n = \sqrt{g/\Delta}$).

(ii) When the system is underdamped ($\zeta < 1$), the frequency of the system decreases to $\omega_d (= \sqrt{1-\zeta^2}\,\omega_n)$ and the time period increases to $T_d = 2\pi/\omega_d$. The amplitudes of the vibrations decrease with time, the ratio of successive amplitudes being constant. The vibrations die down with time.

(iii) At critical damping, $\zeta = 1$, $\omega_d = 0$ and $T_d = \infty$. The system does not vibrate and the mass m moves back slowly to the equilibrium position.

(iv) For an overdamped system, $\zeta > 1$, the system behaves in the same manner as for critical damping.

(v) ζ is the ratio of the existing damping in a system to that required for critical damping, i.e., $\zeta = c/c_c$.

18.9 LOGARITHMIC DECREMENT

In Section 18.7, it was observed that the ratio of two successive oscillations is constant in an underdamped system. Natural logarithm of this ratio is called logarithmic decrement and is denoted by

$$\delta = \ln\left(\frac{X_n}{X_{n+1}}\right) = \ln e^{(\zeta\omega_n T_d)} = \zeta\omega_n T_d$$

or

$$\delta = \zeta\omega_n \frac{2\pi}{\omega_d} = \zeta\omega_n \frac{2\pi}{\sqrt{1-\zeta^2}\,\omega_n} = \frac{2\pi\zeta}{\sqrt{1-\zeta^2}} \tag{18.33}$$

Example 18.5 *A vibrating system consists of a mass of 50 kg, a spring with a stiffness of 30 kN/m and a damper. The damping provided is only 20% of the critical value. Determine the*

(i) damping factor
(ii) critical damping coefficient
(iii) natural frequency of damped vibrations
(iv) logarithmic decrement
(v) ratio of two consecutive amplitudes

Solution

$m = 50$ kg $\quad s = 30\,000$ N/m $\quad c = 0.2\,c_c$

(i) $\zeta = \dfrac{c}{c_c} = \underline{0.2}$

(ii) $c_c = 2\sqrt{sm} = 2\sqrt{30\,000 \times 50} = 2450$ N/m/s
$= \underline{2.45 \text{ N/mm/s}}$

(iii) $\omega_d = \sqrt{1-\zeta^2}\,\omega_n$

where

$$\omega_n = \sqrt{\frac{s}{m}} = \sqrt{\frac{30\,000}{50}} = 24.5 \text{ rad/s}$$

$$\omega_d = \sqrt{1-(0.2)^2} \times 24.5 = \underline{24 \text{ rad/s}}$$

(iv) $\delta = \dfrac{2\pi\zeta}{\sqrt{1-\zeta^2}} = \dfrac{2\pi \times 0.2}{\sqrt{1-(0.2)^2}} = \underline{1.28}$

(v) $\dfrac{X_n}{X_{n+1}} = e^{\delta} = e^{1.28} = \underline{3.6}$

Example 18.6 *Determine the time in which the mass in a damped vibrating system would settle down to 1/50 th of its initial deflection for the following data:*

$m = 200$ kg $\quad \zeta = 0.22\,s = 40$ N/mm

Also, find the number of oscillations completed to reach this value of deflection.

Solution We know

$$\frac{X_0}{X_N} = e^{\zeta\omega_n N T_d}$$

where

$$\omega_n = \sqrt{\frac{s}{m}} = \sqrt{\frac{40 \times 10^3}{200}} = 14.14 \text{ rad/s}$$

$\therefore \quad 50 = e^{0.22 \times 14.14 N T_d}$

or

Total time $NT_d = \underline{1.26 \text{ s}}$

$$T_d = \frac{2\pi}{\sqrt{1-\zeta^2}\,\omega_n}$$

$$= \frac{2\pi}{(\sqrt{1-(0.22)^2}) \times 14.14} = 0.455 \text{ s}$$

Number of oscillations completed $= \dfrac{1.26}{0.455} = \underline{2.76}$

Example 18.7 *In a single-degree damped vibrating system, a suspended mass of 8 kg makes 30 oscillations in 18 seconds. The amplitude decreases to 0.25 of the initial value after 5 oscillations. Determine the*

(i) stiffness of the spring
(ii) logarithmic decrement
(iii) damping factor, and
(iv) damping coefficient

Solution

$m = 8$ kg, $N = 30$, $t = 18$s

$f_n = \dfrac{30}{18} = 1.67$ Hz

$\omega_n = 2\pi f_n = 2\pi \times 1.67 = 10.47$ rad/s

(i) $\omega_n = \sqrt{\dfrac{s}{m}}$

$$10.47 = \sqrt{\frac{s}{8}}$$

$\therefore \; s = 877$ N/m $\quad$ or $\quad \underline{0.877 \text{ N/mm}}$

(ii) $\dfrac{X_0}{X_5} = \dfrac{X_0}{X_1} \times \dfrac{X_1}{X_2} \times \dfrac{X_2}{X_3} \times \dfrac{X_3}{X_4} \times \dfrac{X_4}{X_5}$

$$= \left(\frac{X_0}{X_1}\right)^5 \cdots \left(\frac{X_0}{X_1} = \frac{X_1}{X_2} = \frac{X_2}{X_3} = \frac{X_3}{X_4} = \frac{X_4}{X_5}\right)$$

$$\therefore \left(\frac{X_0}{X_1}\right) = \left(\frac{X_0}{X_5}\right)^{1/5} = \left(\frac{1}{0.25}\right)^{1/5} = 1.32$$

$$\delta = \ln\left(\frac{X_0}{X_5}\right) = \ln 1.32 = 0.278$$

(iii) $$\frac{2\pi\zeta}{\sqrt{1-\zeta^2}} = 0.278$$

or

$$\sqrt{1-\zeta^2} = 22.6\zeta$$
$$1-\zeta^2 = 510.82\zeta^2$$
$$\zeta^2 = 0.00195$$
$$\zeta = \underline{0.0442}$$

(iv) $c = 2\,m\,\omega_n\,\zeta$
$= 2 \times 8 \times 10.47 \times 0.0442$
$= \underline{7.4 \text{ N/m/s}}$

Example 18.8 *A machine mounted on springs and fitted with a dashpot has a mass of 60 kg. There are three springs, each of stiffness 12 N/mm. The amplitude of vibrations reduces from 45 to 8 mm in two complete oscillations. Assuming that the damping force varies as the velocity, determine the*

(i) damping coefficient
(ii) ratio of frequencies of damped and undamped vibrations
(iii) periodic time of damped vibrations

Solution $m = 60$ kg
Stiffness of each spring = 12 N/mm
Combined stiffness, $s = 12 \times 3 = 36$ N/mm
$= 36 \times 10^3$ N/m

$$\omega_n = \sqrt{\frac{s}{m}} = \sqrt{\frac{36\times10^3}{60}} = 24.49 \text{ rad/s}$$

(i) $$\frac{X_0}{X_2} = \frac{X_0}{X_1}\times\frac{X_1}{X_2}$$

$$= \left(\frac{X_0}{X_1}\right)^2 \qquad \left(\frac{X_1}{X_2} = \frac{X_0}{X_1}\right)$$

or

$$\left(\frac{X_0}{X_1}\right) = \left(\frac{X_0}{X_2}\right)^{1/2} = \left(\frac{45}{8}\right)^{1/2} = 2.37$$

$$\frac{2\pi\zeta}{\sqrt{1-\zeta^2}} = \ln\ 2.37 = 0.864$$

$$1-\zeta^2 = 52.88\,\zeta^2$$
$$\zeta^2 = 0.0185$$
$$\zeta = 0.136$$

$c = 2m\,\omega_n\,\zeta = 2 \times 60 \times 24.49 \times 0.136$
$= 400$ N/m/s
$= \underline{0.4 \text{ N/mm/s}}$

(ii) $$\frac{\text{Damped frequency}}{\text{Undamped frequency}} = \frac{\omega_d}{\omega_n}$$

$$= \frac{\sqrt{1-\zeta^2}\,\omega_n}{\omega_n} = \sqrt{1-\zeta^2}$$

$$= \sqrt{1-(0.136)^2} = \underline{0.99}$$

(iii) $$T_d = \frac{2\pi}{\omega_d} = \frac{2\pi}{\sqrt{1-\zeta^2}\,\omega_n}$$

$$= \frac{2\pi}{(\sqrt{1-(0.136)^2})\times 24.49} = \underline{0.259 \text{ s}}$$

Example 18.9 *A machine weighs 18 kg and is supported on springs and dashpots. The total stiffness of the springs is 12 N/mm and the damping is 0.2 N/mm/s. The system is initially at rest and a velocity of 120 mm/s is imparted to the mass. Determine the*

(i) displacement and velocity of mass as a function of time
(ii) displacement and velocity after 0.4s

Solution
$m = 18$ kg $\quad v = 0.12$ m/s
$s = 12$ N/mm $= 12\,000$ N/m
$c = 0.2$ N/mm/s $= 200$ N/m/s

$$\omega_n = \sqrt{\frac{s}{m}} = \sqrt{\frac{12\ 000}{18}} = 25.82 \text{ rad/s}$$

$$c = 2\,m\,\omega_n\,\zeta$$
$$200 = 2 \times 18 \times 25.82 \times \zeta$$
$$\zeta = 0.215$$
$$\omega_d = \sqrt{1-\zeta^2}\,\omega_n$$
$$= \sqrt{1-(0.215)^2} \times 25.82 = 25.2 \text{ rad/s}$$

(i) $x = Xe^{-\zeta\omega_n t}\sin(\omega_d t + \varphi)$ [Eq. (18.30)]
$x = 0$ at $t = 0$

$\therefore\ X \sin \varphi = 0$

or

$\sin \varphi = 0$ (X cannot be zero)

or

$\varphi = 0$

$\therefore\ x = Xe^{-\zeta\omega_n t} \sin(\omega_d t)$

$\dot{x} = Xe^{-\zeta\omega_n t}\omega_d \cos(\omega_d t)$

$+ X \sin \omega_d t(-\zeta\omega_n)e^{-\zeta\omega_n t}$

$\dot{x} = 0.12$ at $t = 0$

$\therefore\ 0.12 = X\,\omega_d = 25.2\,X$

or $X = 0.004\ 76$ m $= 4.76$ mm

Displacement, $x = 4.76\ e^{-0.215 \times 25.82\,t} \sin(25.2t)$

or $x = 4.76\ e^{-5.55t} \sin 25.2\ t$

Velocity,

$\dot{x} = X\ e^{-\zeta\omega_n t}\ [\omega_d \cos \omega_d t - \zeta\omega_n \sin \omega_d t]$

$= 4.76\, e^{-5.55\,t}[25.2 \cos 25.2\,t - 5.55 \sin 25.2\,t]$

$= e^{-5.55\,t}[\ 120 \cos 25.2\ t - 26.4 \sin 25.2\ t]$

(ii) $x = 4.76\ e^{-5.55 \times 0.4}\ \sin(25.2 \times 0.4)$

$= 4.76\ e^{-2.22} \sin(10.08 \text{ rad})$

$= 4.76 \times 0.1086 \times (-0.6093)$

$= -0.315$ mm

$\dot{x} = e^{-5.55 \times 0.4}\ [120 \cos(25.2 \times 0.4)$

$- 26.4 \sin(25.2 \times 0.4)]$

$= 0.1086 \times\ [120 \cos(10.08 \text{ rad}) - 26.4 \sin$

$(10.08 \text{ rad})]$

$= 0.1086\ [-95.15 - (-16.086)]$

$= -8.587$ mm/s

Example 18.10 *A gun is so designed that, on firing, the barrel recoils against a spring. A dashpot, at the end of the recoil, allows the barrel to come back to its initial position within the minimum time without any oscillation. The gun barrel has a mass of 500 kg and a recoil spring of 300 N/mm. The barrel recoils 1 m on firing. Determine the*

(i) initial recoil velocity of the gun barrel, and

(ii) critical damping coefficient of the dashpot engaged at the end of the recoil stroke.

Solution

$m = 500$ kg $\quad s = 300$ N/mm $\quad x = 1$ m

(i) The dashpot does not operate during the recoil.

KE of the barrel = Work done on the spring

$$\frac{1}{2}mv^2 = \frac{1}{2}sx^2$$

$$\frac{1}{2} \times 500 \times v^2 = \frac{1}{2} \times (300 \times 10^3) \times (1)^2$$

$v = \underline{24.5 \text{ m/s}}$

(ii) $c_c = 2m\ \omega_n$

But $\omega_n = \sqrt{\dfrac{s}{m}} = \sqrt{\dfrac{300 \times 10^3}{500}} = 24.5$ m/s

$\therefore\ c_c = 2 \times 500 \times 24.5 = 24\ 500$ N/m/s

or $\underline{24.5 \text{ N/mm/s}}$

18.10 FORCED VIBRATIONS

The forcing may be step-input, harmonic or periodic as discussed below:

Step-Input Forcing

Application of a constant force to the mass of a vibrating system is known as step-input forcing. The equation of motion will be

$$m\ddot{x} + sx = F$$

The effect of the constant force F on the system will be similar to the applied weight force due to the mass of the vibrating system (Sec. 18.6, Fig. 18.5) in which the mass vibrates about *B-B*, i.e., the equilibrium position assumed after the applied weight (force), the displacement being *mg/s* from the position *A-A*. In a similar way, on application of the force F, the system will vibrate about the new equilibrium position, the displacement of which will be *F/s*.

Harmonic Forcing

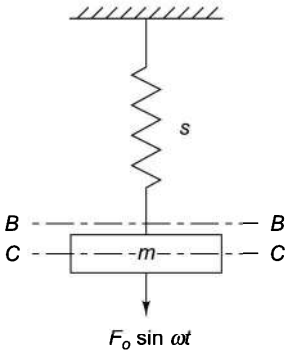

Fig. 18.18

Consider a mass attached to a helical spring and suspended from a fixed support (no damping). Before the mass is set in motion, let *B-B* be the static equilibrium position under the weight of the mass (Fig. 18.18). Assume now that the mass is subjected to an oscillating force $F = F_o \sin \omega t$, the forces acting on the mass at any instant will be

- Impressed oscillating force $F = F_o \sin \omega t$ (downwards)
- Inertia forces $= m\ddot{x}$ (upwards)
- Spring force (restoring force) $= sx$ (upwards)

Thus the equation of motion will be

$$m\ddot{x} + sx = F_o \sin \omega t \tag{18.34}$$

The solution of this equation will consist of the complementary function (*CF*) and the particular integral (*PI*). *CF* is the solution of the equation $m\ddot{x} + sx = 0$ and is

$$CF = X \sin (\omega_n t + \phi)$$

PI can be obtained by using the *D* operator,

$$(D^2 + s/m)\, x = (F_o/m) \cos \omega t$$

$$PI = \frac{(F_o/m)\sin \omega t}{D^2 + (s/m)} = \frac{(F_o/m)\sin \omega t}{-\omega^2 + (s/m)} = \frac{(F_o/m)}{(s/m) - \omega^2} \sin \omega t$$

Multiplying the numerator and denominator by *m/s*

$$\text{Particular integral} = \frac{F_0/s}{1 - (\omega/\omega_n)^2} \sin \omega t$$

Therefore, the complete solution is

$$x = X \sin (\omega_n t + \phi) + \frac{F_0/s}{1 - (\omega/\omega_n)^2} \sin \omega t \tag{18.35}$$

Thus the resultant motion is the sum of two harmonics. The constants X and ϕ of the first harmonic are obtained from the initial conditions.

Figure 18.19 shows the motion formed by two phasors of different lengths and rotational velocities.

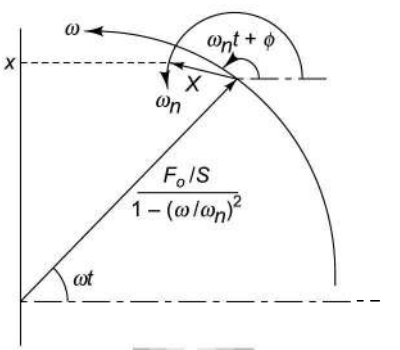

Fig. 18.19

Periodic Forcing

A periodic force is one in which the motion repeats itself in all details after a certain interval of time. It can be shown mathematically that any periodic curve of frequency ω can be represented by a series of harmonic functions, the frequency of each harmonic being an integral multiple of frequency ω, i.e.,

$$f(t) = a_o + a_1 \sin \omega t + a_2 \sin 2\omega t + a_3 \sin 3\omega t + \ldots\, a_n \sin n\omega t + \ldots$$

$$+ a_1 \cos \omega t + a_2 \cos 2\omega t + a_3 \cos 3\omega t + \ldots a_n \cos n\omega t + \ldots$$

The series given by this equation is known as *Fourier series*. The various amplitudes $a_1, a_2 \ldots b_1, b_2 \ldots$, etc., of sine and cos waves can be found analytically when $f(t)$ is known. The harmonic of frequency ω is known as the fundamental or the first harmonic of $f(t)$ and the harmonic of frequency $n\omega$, the nth harmonic.

Thus, a periodic force is represented by

$$F(t) = F_o + F_1 \sin \omega t + F_2 \sin 2\omega t + F_3 \sin 3\omega t + \ldots . F_n \sin n\omega t + \ldots .$$
$$+ F_1 \cos \omega t + F_2 \cos 2\omega t + F_3 \cos 3\omega t + \ldots . F_n \cos n\omega t + \ldots .$$

and the differential equation of the system becomes

$$m\ddot{x} + sx = F_o + F_1 \sin \omega t + F_2 \sin 2\omega t + F_3 \sin 3\omega t + \ldots . F_n \sin n\omega t + \ldots .$$
$$+ F_1 \cos \omega t + F_2 \cos 2\omega t + F_3 \cos 3\omega t + \ldots . F_n \cos n\omega t + \ldots .$$

The response of the complete periodic forcing is the vector sum of the responses to the complimentary functions and particular solutions of the individual forcing functions as on the right-hand side of the equation.

18.11 FORCED-DAMPED VIBRATIONS

A mass m is attached to a helical spring and is suspended from a fixed support as before. Damping is also provided in the system with a dashpot (Fig. 18.20).

Before the mass is set in motion, let B-B be the static equilibrium position under the weight of the mass. Now, if the mass is subjected to an oscillating force $F = F_0 \sin \omega t$, the forces acting on the mass at any instant will be

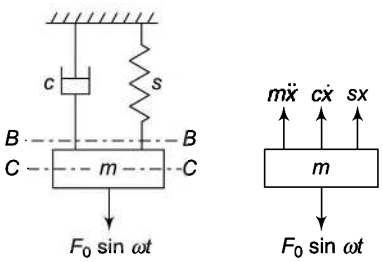

Fig. 18.20

- Impressed oscillating force (downwards) $F = F_0 \sin \omega t$
- Inertia force (upwards) $= m\ddot{x}$
- Damping force (upwards) $= c\dot{x}$
- Spring force (restoring force) $= sx$ (upwards)

Thus the equation of motion will be

$$m\ddot{x} + c\dot{x} + sx - F_0 \sin \omega t = 0$$

or

$$m\ddot{x} + c\dot{x} + sx = F_0 \sin \omega t \tag{18.36}$$

Complete solution of this equation consists of two parts, the complementary function (CF) and the particular integral (PI).

$$CF = Xe^{-\zeta \omega_n t} \sin (\omega_d t + \varphi_1) \qquad \text{[refer to Eq. (18.30)]}$$

To obtain the PI, let

$$\frac{c}{m} = a, \frac{s}{m} = b, \text{ and } \frac{F_0}{m} = d$$

Then, using the operator D, the equation becomes

$$(D^2 + aD + b)\, x = d \sin \omega t$$

$$PI = \frac{d \sin \omega t}{D^2 + aD + b}$$

$$= \frac{d \sin \omega t}{-\omega^2 + aD + b}$$

$$= \frac{1}{(b-\omega^2) + aD} \times \frac{(b-\omega^2) - aD}{(b-\omega^2) - aD} d \sin \omega t$$

$$= d\left[\frac{\sin \omega t(b-\omega^2) - aD \sin \omega t}{(b-\omega^2)^2 - a^2 D^2}\right]$$

$$= d\left[\frac{\sin \omega t(b-\omega^2) - a\omega \cos \omega t}{(b-\omega^2)^2 + (a\omega)^2}\right]$$

Take $(b - \omega^2) = R \cos \varphi$ and $a\ \omega = R \sin \varphi$

Constants R and φ are given by

$$R = \sqrt{(b-\omega^2)^2 + (a\omega)^2} \quad \text{and} \quad \varphi = \tan^{-1} \frac{a}{b-\omega^2}$$

$$PI = \frac{dR(\sin \omega t \cos \varphi - \cos \omega t \sin \varphi)}{(b-\omega^2)^2 + (a\omega)^2}$$

$$= \frac{d\sqrt{(b-\omega^2)^2 + (a\omega)^2}}{(b-\omega^2) + (a\omega)^2} \sin(\omega t - \varphi)$$

$$= \frac{d}{\sqrt{(b-\omega^2)^2 + (a\omega)^2}} \sin(\omega t - \varphi)$$

$$= \frac{F_0 / m}{\sqrt{\left(\frac{s}{m} - \omega^2\right)^2 + \left(\frac{c}{m}\omega\right)^2}} \sin(\omega t - \varphi)$$

$$= \frac{F_0}{\sqrt{(s - m\omega^2)^2 + (c\omega)^2}} \sin(\omega t - \varphi)$$

$$x = CF + PI$$

$$Xe^{-\zeta\omega_n t} \sin(\omega_d t - \varphi_1) + \frac{F_0}{\sqrt{(s - m\omega^2)^2 + (c\omega)^2}} \sin(\omega t \tag{18.37}$$

The damped-free vibrations represented by the first part (CF) becomes negligible with time as $e^{-\infty} = 0$. The steady-state response of the system is then given by the second part PI.

The amplitude of the steady-state response is given by

$$A = \frac{F_0}{\sqrt{(s - m\omega^2)^2 + (c\omega)^2}} \tag{18.38}$$

$$= \frac{F_0 / s}{\sqrt{\left(1 - \frac{m\omega^2}{s}\right)^2 + \left(\frac{c}{s}\omega\right)^2}}$$

$$= \frac{F_0 / s}{\sqrt{\left[1-\left(\frac{\omega}{\omega_n}\right)^2\right]^2 + \left(2\zeta \frac{\omega}{\omega_n}\right)^2}} \tag{18.39}$$

The equation is in the dimensionless form and is more convenient for analysis. It may be noted that the numerator F_o/s is the static deflection of the spring of stiffness s under a force F_o. The frequency of the steady-state forced vibration is the same as that of the impressed vibrations. φ is the phase lag for the displacement relative to the velocity vector.

$$\tan\varphi = \frac{a\omega}{b-\omega^2} = \frac{\frac{c}{m}\omega}{\frac{s}{m}-\omega^2} = \frac{c\omega}{s-m\omega^2} = \frac{2\zeta\frac{\omega}{\omega_n}}{1-\left(\frac{\omega}{\omega_n}\right)^2} \tag{18.40}$$

The particular solution of the equation of motion can also be obtained graphically as follows:

Assume that the displacement of the vibrating mass under the action of the applied simple harmonic force $F_o \sin \omega t$ is also simple harmonic and lags by an amount φ. Then

$$x = A \sin(\omega t - \varphi)$$

and

$$\dot{x} = \omega A \cos(\omega t - \varphi) = \omega A \sin\left[\frac{\pi}{2} + (\omega t - \varphi)\right]$$

$$\ddot{x} = -\omega^2 A \sin(\omega t - \varphi)$$

where A is the amplitude of vibrations.

Substituting these values in the equation

$$m\ddot{x} + c\dot{x} + sx = F_o \sin \omega t$$

$$-m\omega^2 A \sin(\omega t - \varphi) + c\omega A \sin\left[\frac{\pi}{2} + (\omega t - \varphi)\right] + sA \sin(\omega t - \varphi) - F_0 \sin \omega t = 0$$

$$F_0 \sin \omega t + m\omega^2 A \sin(\omega t - \varphi) - c\omega A \sin\left[\frac{\pi}{2} + (\omega t - \varphi)\right] - sA \sin(\omega t - \varphi) = 0$$

The forces and the vector sum of the same have been shown in Fig. 18.21. In triangle *abc*,

$$\sqrt{(sA - m\omega^2 A)^2 + (c\omega A)^2} = F_0$$

or

$$A\sqrt{(s - m\omega^2) + (c\omega)^2} = F_0$$

or

$$A = \frac{F_0}{\sqrt{(s - m\omega^2)^2 + (c\omega)^2}}$$

and

$$\tan\varphi = \frac{c\omega}{s - m\omega^2}$$

The vectors as shown in the diagram are fixed relative to one another and rotate with angular velocity ω.

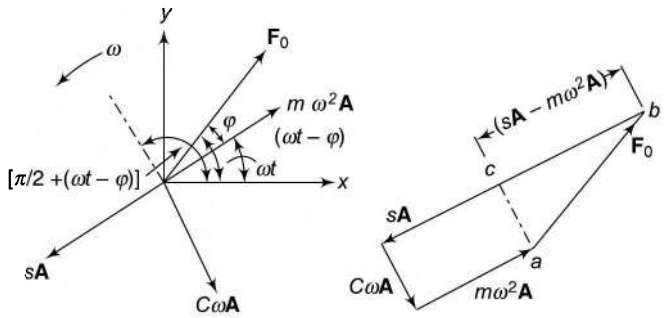

Fig. 18.21

18.12 MAGNIFICATION FACTOR

The ratio of the amplitude of the steady-state response to the static deflection under the action of force F_o is known as the *magnification factor* (*MF*).

$$MF = \frac{F_0 / \sqrt{(s-\omega^2)^2 + (c\omega)^2}}{F_0 / s}$$

$$= \frac{s}{\sqrt{(s - m\omega^2)^2 + (c\omega)^2}}$$

$$= \frac{1}{\sqrt{\left(1 - \frac{m}{s}\omega^2\right)^2 + \left(\frac{c}{s}\omega\right)^2}}$$

$$= \frac{1}{\sqrt{\left[1 - \left(\frac{\omega}{\omega_n}\right)^2\right]^2 + \left(2\zeta\frac{\omega}{\omega_n}\right)^2}} \tag{18.41}$$

Thus, the magnification factor depends upon

(a) the ratio of frequencies, $\frac{\omega}{\omega_n}$, and

(b) the damping factor.

The plot of magnification factor against the ratio of frequencies (ω/ω_n) for different values of ζ is shown in Fig. 18.22(a). The curves show that as the damping increases or ζ increases, the maximum value of the magnification factor decreases and vice-versa. When there is no damping ($\zeta = 0$), it reaches infinity at $\omega/\omega_n = 1$, i.e., when the frequency of the forced vibrations is equal to the frequency of the free vibration. This condition is known as *resonance*.

In practice, the magnification factor cannot reach infinity owing to friction which tends to dampen the vibration. However, the amplitude can reach very high values.

Figure 18.22 (b) shows the plots of phase angle vs. frequency ratio (ω/ω_n) for different values of ζ. Observe the following:

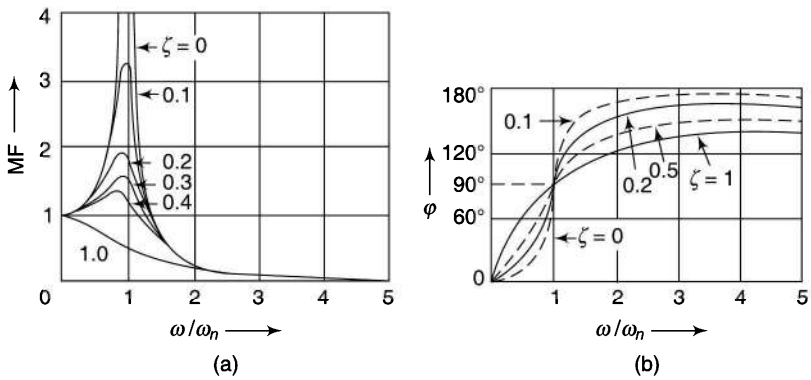

Fig. 18.22

- Irrespective of the amount of damping, the maximum amplitude of vibration occurs before the ratio ω/ω_n reaches unity or when the frequency of the forced vibration is less than that of the undamped vibrations.
- Phase angle varies from zero at low frequencies to 180° at very high frequencies. It changes very rapidly near the resonance and is 90° at resonance irrespective of damping.
- In the absence of any damping, phase angle suddenly changes from zero to 180° at resonance.

Example 18.11 *A machine part having a mass of 2.5 kg vibrates in a viscous medium. A harmonic exciting force of 30 N acts on the part and causes a resonant amplitude of 14 mm with a period of 0.22 second. Find the damping coefficient.*

If the frequency of the exciting force is changed to 4 Hz, determine the increase in the amplitude of the forced vibrations upon the removal of the damper.

Solution

$m = 2.5$ kg $\qquad F_o = 30$ N

$A = 14$ mm $\qquad T = 0.22$ s

$$\omega = \frac{2\pi}{T} = \frac{2\pi}{0.22} = 28.56 \text{ rad/s}$$

(i) At resonance, $\omega = \omega_m$

or

$$\omega_n = \sqrt{\frac{s}{m}} = 28.56 \text{ rad/s}$$

or

$$\sqrt{\frac{s}{2.5}} = 28.56$$

$s = 2039$ N/m or 2.039 N/mm

Now,

$$A = \frac{F_0 / s}{\sqrt{\left[1-\left(\frac{\omega}{\omega_n}\right)^2\right]^2 + \left(\frac{2\zeta\omega}{\omega_n}\right)^2}}$$

or

$$A = \frac{F_0 / s}{2\zeta} \qquad \left(\frac{\omega}{\omega_n} = 1\right)$$

or

$$0.014 = \frac{30/2039}{2\zeta}$$

or

$\zeta = 0.526$

$c = 2m\,\omega_n\,\zeta = 2 \times 2.5 \times 28.56 \times 0.526$

$= 75.04$ N/m/s

$= \underline{0.075\ 04 \text{ N/mm/s}}$

(ii) $\omega = f_n \times 2\,\pi = 4 \times 2\,\pi = 25.13$ rad/s

With damper

$$A = \frac{30/2039}{\sqrt{\left[1-\left(\frac{25.13}{28.56}\right)^2\right]^2 + \left[2 \times 0.526 \times \frac{25.13}{28.56}\right]^2}}$$

$$= \frac{30/2039}{\sqrt{(0.2258)^2 + (0.9248)^2}} = 0.0155 \text{ m}$$

Without damper: $\zeta = 0$

$$A = \frac{30/2039}{0.2258} = 0.0652 \text{ m}$$

$\therefore$ Increase in magnitude = 0.0652 – 0.0155 = 0.0497 m or <u>49.7 mm</u>

Example 18.12 *A single-cylinder vertical diesel engine has a mass of 400 kg and is mounted on a steel chassis frame. The static deflection owing to the weight of the chassis is 2.4 mm. The reciprocating masses of the engine amounts to 18 kg and the stroke of the engine is 160 mm. A dashpot with a damping coefficient of 2 N/mm/s is also used to dampen the vibrations. In the steady-state of the vibrations, determine the*

(i) amplitude of the vibrations if the driving shaft rotates at 500 rpm

(ii) speed of the driving shaft when the resonance occurs

Solution

$m = 400$ kg $\qquad N = 500$ rpm

$c = 2000$ N/m/s $\qquad \Delta = 2.4$ mm

$r = 80$ mm $\qquad = 0.0024$ m

$$\omega = \frac{2\pi \times 500}{60} = 52.36 \text{ rad/s}$$

Now $s \times \Delta = mg$

$\therefore \quad s \times 0.0024 = 400 \times 9.81$

$s = 1.635 \times 10^6$ N/m

Centrifugal force due to reciprocating parts (or the static force),

$F_0 = mr\omega^2 = 18 \times 0.08 \times (52.36)^2 = 3948$ N

(i) $$A = \frac{F_0}{\sqrt{(s - m\omega^2)^2 + (c\omega)^2}} \qquad \text{[Eq. (18.38)]}$$

$$= \frac{3948}{\sqrt{[1.635 \times 10^6 - 400(52.36)^2]^2 + (2000 \times 52.36)^2}}$$

= 0.0072 m or <u>7.2 mm</u>

(ii) *Resonant speed*

$$\omega = \omega_n = \sqrt{\frac{s}{m}} = \sqrt{\frac{1.635 \times 10^6}{400}} = 63.93 \text{ rad/s}$$

or $\dfrac{2\pi N}{60} = 63.93$

$N =$ <u>610.5 rpm</u>

Example 18.13 *A body having a mass of 15 kg is suspended from a spring which deflects 12 mm under the weight of the mass. Determine the frequency of the free vibrations. What is the viscous damping force needed to make the motion aperiodic at a speed of 1 mm/s?*

If, when damped to this extent, a disturbing force having a maximum value of 100 N and vibrating at 6 Hz is made to act on the body, determine the amplitude of the ultimate motion.

Solution

$m = 15$ kg $\qquad \Delta = 12$ mm

$F_0 = 100$ N $\qquad f = 6$ Hz

$$f_n = \frac{1}{2\pi}\sqrt{\frac{g}{\Delta}} = \frac{1}{2\pi}\sqrt{\frac{9.81}{0.012}} = 4.55 \text{ Hz}$$

The motion becomes aperiodic when the damped frequency is zero or when it is critically damped ($\zeta = 1$) and

$$\omega = \omega_n = \sqrt{\frac{g}{\Delta}} = \sqrt{\frac{9.81}{0.012}} = \underline{28.59 \text{ rad/s}}$$

$c = c_c = 2m\,\omega_n = 2 \times 15 \times 28.59 = 857$ N/m/s = 0.857 N/mm/s

Thus, the force needed is 0.857 N at a speed of 1 mm/s.

$$A = \frac{F_0}{\sqrt{(s - m\omega^2)^2 + (c\omega)^2}}$$

But $\omega = 2\pi \times f = 2\pi \times 6 = 37.7$ rad/s

and s can be found from

$$f_n = \frac{1}{2\pi}\sqrt{s/m}$$

or $\quad 4.55 = \dfrac{1}{2\pi}\sqrt{s/15}$

or $\quad s = 12\,260$ N/m

$$\therefore A = \frac{100}{\sqrt{[12\,260 - 15 \times (37.7)^2]^2 + (857 \times 37.7)^2}}$$

= 0.002 98 m = <u>2.98 mm</u>

18.13 VIBRATION ISOLATION AND TRANSMISSIBILITY

Vibrations are produced in machines having unbalanced masses. These vibrations will be transmitted to the foundation upon which the machines are installed. This is usually undesirable. To diminish the transmitted forces, machines are usually mounted on springs or dampers, or on some other vibration isolating material. Then the vibratory forces can reach the foundation only through these springs, dampers, or the isolating material used.

Transmissibility is defined as the ratio of the force transmitted (to the foundation) to the force applied. It is a measure of the effectiveness of the vibration isolating material.

As the transmitted force is the vector sum of the spring force (sA) and the damping force ($c\omega A$) which are at perpendicular to each other (Fig. 18.21),

$$F_t = \sqrt{(sA)^2 + (c\omega A)^2}$$

$$= A\sqrt{(s)^2 + (c\omega)^2}$$

$$= \frac{F_0}{\sqrt{(s - m\omega^2)^2 + (c\omega)^2}}\sqrt{s^2 + (c\omega)^2}$$

$$= \frac{F_0\sqrt{1 + \left(\frac{c}{s}\omega\right)^2}}{\sqrt{\left(1 - \frac{m}{s}\omega^2\right)^2 + \left(\frac{c}{s}\omega\right)^2}}$$

$$= \frac{F_0\sqrt{1 + (2\zeta\omega/\omega_n)^2}}{\sqrt{[1 - (\omega/\omega_n)^2]^2 + (2\zeta\omega/\omega_n)^2}}$$

Transmissibility,

$$\varepsilon = \frac{F_t}{F_0} = \frac{\sqrt{1 + (2\zeta\omega/\omega_n)^2}}{\sqrt{[1 - (\omega/\omega_n)^2]^2 + (2\zeta\omega/\omega_n)^2}} \tag{18.42}$$

At resonance,

$$\frac{\omega}{\omega_n} = 1,$$

$$\therefore \quad \varepsilon = \frac{\sqrt{1 + (2\zeta)^2}}{2\zeta} \tag{18.43}$$

when no damper is used, $\zeta = 0$
and

$$\varepsilon = \frac{1}{\pm[1 - (\omega/\omega_n)^2]} \tag{18.44}$$

Transmissibility has been plotted against ω/ω_n for different values of ζ in Fig.18.23. Note that

(i) when $\omega/\omega_n < \sqrt{2}$, ε is more than 1, i.e., the transmitted force is always more than the exciting force

(ii) when $\omega/\omega_n > \sqrt{2}$, ε is less than 1, i.e., the transmitted force is always less than the exciting force

(iii) when $\omega/\omega_n = \sqrt{2}$, ε is 1, i.e., the transmitted force is equal to the exciting force

(iv) when $\omega/\omega_n > 1$, the transmitted force is infinite; if damping is used, the magnitude of the transmitted force can be reduced

(v) when $\omega/\omega_n = \sqrt{2}$, ε increases as the damping is increased

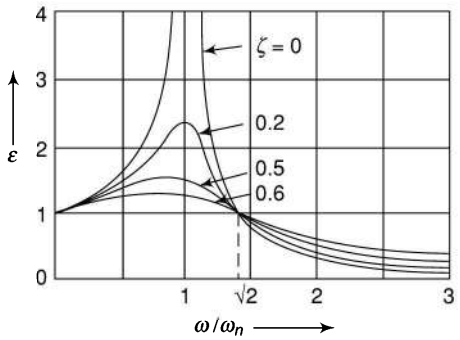

Fig. 18.23

Thus in a system where ω/ω_n can vary from zero to higher values, dampers should not be used. Instead, stops may be provided to limit the resonance amplitude (at resonance, the amplification factor is infinitely).

Example 18.14 *A refrigerator unit having a mass of 35 kg is to be supported on three springs, each having a spring stiffness s. The unit operates at 480 rpm. Find the value of stiffness s if only 10% of the shaking force is allowed to be transmitted to the supporting structure.*

Solution As no damper is used,

$$\varepsilon = \frac{1}{\pm\left[1-\left(\frac{\omega}{\omega_n}\right)^2\right]}$$

$$\omega = \frac{2\pi \times 480}{60} = 16\pi \quad \text{and} \quad \varepsilon = 0.1$$

$$\therefore \quad 0.1 = \frac{1}{\pm\left[1-\left(\frac{16\pi}{\omega_n}\right)^2\right]}$$

$$\pm\left[0.1 - 0.1\left(\frac{16\pi}{\omega_n}\right)^2\right] = 1$$

If the positive sign is taken, $\frac{16\pi}{\omega_n} = \sqrt{-9}$ which is not possible.

Therefore taking the negative sign, $\frac{16\pi}{\omega_n} = \sqrt{11}$

or $\omega_n = 15.15$ rad/s

or $\sqrt{\frac{s}{m}} = \sqrt{\frac{s}{35}} = 15.15$

Equivalent stiffness,

$s = 8037$ N/m $= 8.037$ N/mm

Stiffness of each spring $= \frac{8.037}{3} = \underline{2.679 \text{ N/mm}}$

Example 18.15 *A machine supported symmetrically on four springs has a mass of 80 kg. The mass of the reciprocating parts is 2.2 kg which move through a vertical stroke of 100 mm with simple harmonic motion. Neglecting damping, determine the combined stiffness of the springs so that the force transmitted to the foundation is 1/20th of the impressed force. The machine crankshaft rotates at 800 rpm.*

If, under actual working conditions, the damping reduces the amplitudes of successive vibrations by 30%, find the

(i) force transmitted to the foundation at 800 rpm

(ii) force transmitted to the foundation at resonance

(iii) amplitude of the vibrations at resonance

Solution

$M = 80$ kg $\qquad \varepsilon = \frac{1}{20} = 0.05$

$m = 2.2$ kg $\qquad N = 800$ rpm

$r = \frac{100}{2} = 50$ mm

$$\omega = \frac{2\pi N}{60} = \frac{2\pi \times 800}{60}$$
$$= 83.78 \text{ rad/s}$$

In the absence of damping,

$$\varepsilon = \frac{1}{\left(\frac{\omega}{\omega_n}\right)^2 - 1}$$

or

$$0.05 = \frac{1}{\left(\frac{83.78}{\omega_n}\right)^2 - 1}$$

$\omega_n = 18.28$ rad/s

or

$$\sqrt{\frac{s}{M}} = \sqrt{\frac{s}{80}} = 18.28$$

$\therefore$ combined stiffness, $s = 26\ 739$ N/m

$= 26.739$ N/mm

(i) $$\frac{2\pi\zeta}{\sqrt{1-\zeta^2}} = \ln\left(\frac{x_1}{x_2}\right) = \ln\left(\frac{1}{1-0.3}\right)$$

$$\frac{\zeta^2}{1-\zeta^2} = 0.003\ 23$$

$\zeta = 0.0567$

$$\varepsilon = \frac{\sqrt{1+(2\zeta\omega/\omega_n)^2}}{\sqrt{[1-(\omega/\omega_n)^2]^2 + (2\zeta\omega/\omega_n)^2}}$$

$$= \frac{\sqrt{1+\left(2\times 0.0567\times\frac{83.78}{18.28}\right)^2}}{\sqrt{\left[1-\left(\frac{83.78}{18.28}\right)^2\right]^2 + \left(2\times 0.0567\times\frac{83.78}{18.28}\right)^2}}$$

$= 0.0563$

The maximum unbalanced force on the machine due to the reciprocating parts,

$F = mr\omega^2 = 2.2 \times 0.05 \times (83.78)^2 = 772.1$ N

$$\varepsilon = \frac{F_t}{F}$$

or

$$0.0563 = \frac{F_t}{772.1}$$

or

$F_t = 43.47$ N

(ii) At resonance, $\frac{\omega}{\omega_n} = 1$

$$\varepsilon = \frac{\sqrt{1+(2\zeta)^2}}{2\zeta}$$

$$= \frac{\sqrt{1+(2\times 0.0567)^2}}{2\times 0.0567} = 8.875$$

Maximum unbalanced force on the machine due to reciprocating parts at resonance, i.e., when $\omega = \omega_n$,

$F = 2.2 \times 0.05 \times (18.28)^2 = 36.76$ N

$F_t = \varepsilon \times F = 8.875 \times 36.76 = 326.25$ N

(iii) $$\text{Amplitude} = \frac{\text{Force transmitted at resonance}}{\text{Stiffness}}$$

$$= \frac{326.25}{26.739} = \underline{12.2 \text{ mm}}$$

18.14 FORCING DUE TO UNBALANCE

All types of rotating machinery such as electric motor, turbine or a pump always consist of some amount of unbalance left in them even though they are carefully balanced on balancing machines. The net unbalance in such machines may be represented by a mass m rotating with its centre of mass at a distance e from axis of rotation (Fig. 18.24). If M is the total or the vibrating mass of the machine including the unbalanced mass m,

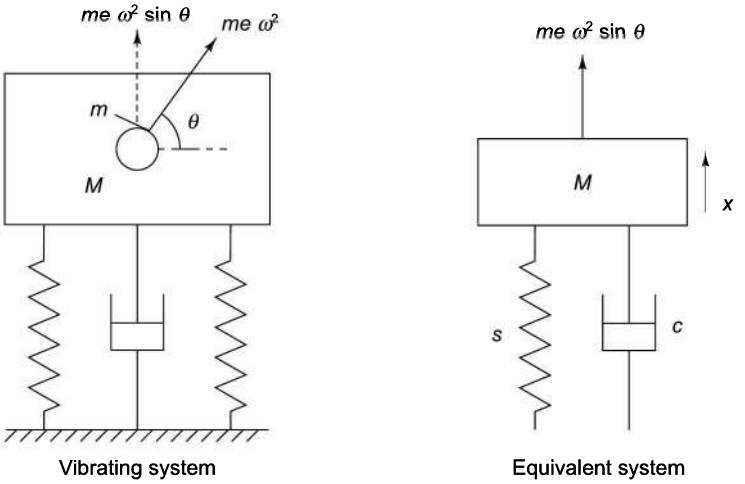

Fig. 18.24

the centrifugal force acting outwards from the centre of rotation = $me\omega^2$

Assume that the system is constrained to move vertically. The equation of motion in the vertical direction can be written as

$$m\ddot{x} + c\dot{x} + sx = me\omega^2 \sin\omega t \tag{18.45}$$

The equation is similar to Eq. 18.36 except that F_o is replaced by $me\omega^2$, assuming that ω is constant, the force represented by $me\omega^2$ is constant. Thus the steady state solution for the equation can be written directly, i.e.,

$$x = \frac{me\omega^2}{\sqrt{(s - m\omega^2)^2 + (c\omega)^2}} \sin(\omega t - \varphi) \tag{18.46}$$

The amplitude,

$$A = \frac{me\omega^2 / s}{\sqrt{\left[1 - \left(\frac{\omega}{\omega_n}\right)^2\right]^2 + \left(2\zeta \frac{\omega}{\omega_n}\right)^2}}$$

But

$$me\frac{\omega^2}{s} = me\frac{\omega^2 / M}{s / M} = \frac{me}{M}\left(\frac{\omega}{\omega_n}\right)^2$$

Therefore,

$$\frac{A}{\frac{me}{M}} = \frac{\left(\frac{\omega}{\omega_n}\right)^2}{\sqrt{\left[1 - \left(\frac{\omega}{\omega_n}\right)^2\right]^2 + \left(2\zeta \frac{\omega}{\omega_n}\right)^2}} \tag{18.47}$$

The equation provides the steady-state amplitude as a function of damping factor and frequency ratio. This has been plotted in Fig. 18.25. It shows that at higher values of frequency ratio ω / ω_n, the amplitude can be

reduced by mass and eccentricity of the rotating unbalance. The equation for phase angle remains the same as Eq. 18.40.

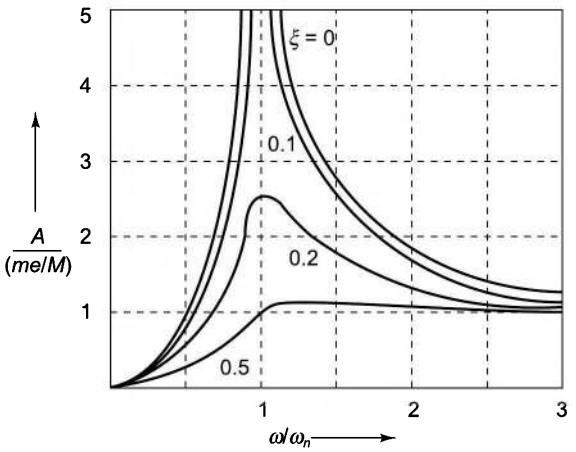

Fig. 18.25

The above analysis can easily be extended to the case of a reciprocating unbalance (Fig. 18.26). The inertia force due to reciprocating mass is approximately equal to

$$= mr\omega^2\left(\cos\theta + \frac{\cos 2\theta}{l/r}\right) \qquad \text{(Eq. 13.18)}$$

If l/r ratio is large, the second harmonic may be neglected, and the equation of motion may be written as

$$m\ddot{x} + c\dot{x} + sx = mr\omega^2 \cos\omega t$$

which is similar to that for rotating unbalance and can easily be analysed.

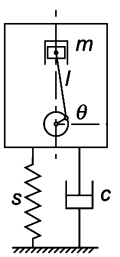

Fig. 18.26

18.15 FORCING DUE TO SUPPORT MOTION

In case of vehicles, the excitation of the system is through the support or base instead of directly to the mass. Assuming that the support is excited by a harmonic motion (Fig. 18.27),

$$y = Y \sin\omega t \qquad (18.48)$$

and the displacement of mass x is more as compared to the displacement of y in the considered position.

The equation of motion can be written as

$$m\ddot{x} + c(\dot{x} - \dot{y}) + s(x - y) = 0$$

or $$m\ddot{x} + c\dot{x} + sx = c\dot{y} + sy$$

$$= c\,Y\omega\cos\omega t + s\,Y\sin\omega t \qquad (\dot{y} = Y\omega\cos\omega t)$$

$$= Y[c\omega\cos\omega t + s\sin\omega t]$$

Let $c\omega = K\sin\alpha$ and $s = K\sin\alpha$

So that $$K = \sqrt{(c\omega)^2 + s^2} \quad \text{and} \quad \alpha = \tan^{-1}\frac{c\omega}{s} = \tan^{-1}\left(2\zeta\frac{\omega}{\omega_n}\right)$$

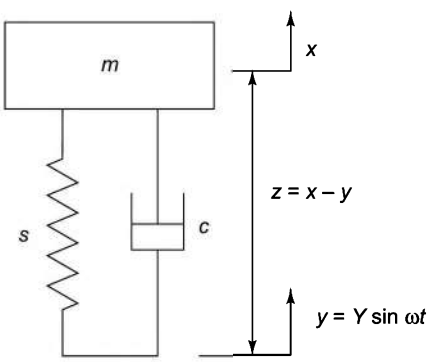

Fig. 18.27

Thus the equation transforms to

$$m\ddot{x} + c\dot{x} + sx = Y[c\omega\cos\omega t + s\sin\omega t]$$
$$= Y[K\sin\alpha\ \cos\omega t + K\sin\alpha\sin\omega t]$$
$$= YK\sin(\omega t + \alpha)$$

The steady state solution is similar to that of 18.38,

$$x = \frac{YK}{\sqrt{(s - m\omega^2)^2 + (c\omega)^2}}\sin(\omega t + \alpha - \varphi) \tag{18.49}$$

The amplitude is

$$A = \frac{YK}{\sqrt{(s - m\omega^2)^2 + (c\omega)^2}}$$

$$\frac{A}{Y} = \frac{\sqrt{s + (c\omega)^2}}{\sqrt{(s - m\omega^2)^2 + (c\omega)^2}}$$

which can be transformed into dimensionless form,

$$\frac{A}{Y} = \frac{\sqrt{1 + \left(2\zeta\dfrac{\omega}{\omega_n}\right)^2}}{\sqrt{\left[1 - \left(\dfrac{\omega}{\omega_n}\right)^2\right]^2 + \left(2\zeta\dfrac{\omega}{\omega_n}\right)^2}} \tag{18.50}$$

ϕ is given by

$$\varphi = \tan^{-1}\frac{2\zeta\dfrac{\omega}{\omega_n}}{1 - \left(\dfrac{\omega}{\omega_n}\right)^2}$$

Comparing Eqs (18.48) and (18.49), it is observed that the motion of mass leads the support motion through an angle $(\alpha - \phi)$ or lags by angle $(\phi - \alpha)$.

$$\phi - \alpha = \tan^{-1}\frac{2\zeta\dfrac{\omega}{\omega_n}}{1 - \left(\dfrac{\omega}{\omega_n}\right)^2} - \tan^{-1} 2\zeta\frac{\omega}{\omega_n} \tag{18.51}$$

- From the Eq. 18.50 it can be noted that in case the exciting frequency ω is very small as compared to ω_n or ω is negligible, the ratio A/Y approaches one or the complete system vibrates as a rigid body.
- If $\omega >> \omega_n$, ω/ω_n approaches infinity and thus, A/Y approaches zero or the body is stationary.

The ratio A/Y is usually known as *displacement* or *amplitude transmissibility*. The plots of transmissibility and phase lag are similar to those for force transmissibility given in Figs 18.23 and 18.22(b).

Relative Amplitude Let z be the displacement of the of the mass relative to the support so that

$z = x - y$

or $x = y + z$

As $y = Y\sin\omega t$

$\therefore$ $\dot{y} = Y\omega\cos\omega t$ and $\ddot{y} = -Y\omega^2\sin\omega t$

The equation of motion can be written as

$$m(\ddot{y} + \ddot{z}) + c\dot{z} + sz = 0$$

or

$$m\ddot{z} + c\dot{x} + sx = -m\ddot{y} = mY\omega^2 \sin \omega t$$

The equation is similar to Eq. (in sec 18.45). Thus the steady state response is

$$\frac{Z}{Y} = \frac{\left(\frac{\omega}{\omega_n}\right)^2}{\sqrt{\left[1-\left(\frac{\omega}{\omega_n}\right)^2\right]^2 + \left(2\zeta\frac{\omega}{\omega_n}\right)^2}} \tag{18.52}$$

where Z is the steady state relative amplitude. The equation for phase angle remains same as Eq. 18.40.

SECTION II (TRANSVERSE VIBRATIONS)

Natural vibrations of shafts and beams under different types of loads and end conditions have been explained in the following sections:

18.16 SINGLE CONCENTRATED LOAD

In case of shafts and beams of negligible mass carrying a concentrated mass, the force is proportional to the deflection of the mass from the equilibrium position and the relation derived for natural frequency of longitudinal vibrations holds good, i.e.,

$$f_n = \frac{1}{2\pi}\sqrt{g/\Delta}$$

where $\Delta = \dfrac{mgl^3}{3El}$ for cantilevers, supporting a concentrated mass at the free end

$$= \frac{mga^2b^2}{3Ell} \text{ for simply supported beams}$$

$$= \frac{mga^3b^3}{3Ell^3} \text{ for beams fixed at both ends}$$

These cases have been shown in Fig. 18.28.

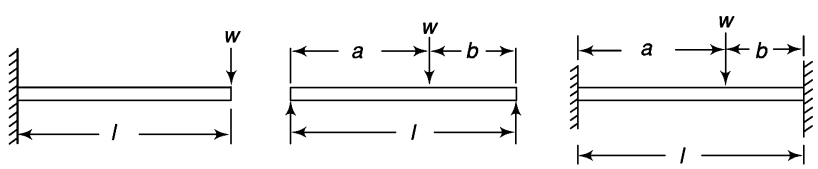

Fig. 18.28

A shaft supported in long bearings is assumed to have both ends fixed while one in short bearings is considered to be simply supported.

Example 18.16 *A shaft supported freely at the ends has a mass of 120 kg placed 250 mm from one end. The shaft diameter is 40 mm. Determine the frequency of the natural transverse vibrations if the length of the shaft is 700 mm, E = 200 GN/m².*

Solution

$m = 120$ kg $\quad E = 200 \times 10^9$ N/m²

$l = 0.7$ m $\quad d = 0.04$ m

$a = 0.25$ m $\quad b = 0.7 - 0.25 = 0.45$ m

$$I = \frac{\pi}{64} \times d^4 = \frac{\pi}{64} \times (0.04)^4 = 0.1256 \times 10^{-6} \text{m}^4$$

$$\Delta = \frac{mga^2b^2}{3EIl}$$

$$= \frac{120 \times 9.81 \times (0.25)^2 \times (0.45)^2}{3 \times 200 \times 10^9 \times 0.1256 \times 10^{-6} \times 0.7}$$

$$= 0.282 \times 10^{-3} \text{ m}$$

$$f_n = \frac{1}{2\pi}\sqrt{\frac{g}{\Delta}} = \frac{1}{2\pi}\sqrt{\frac{9.81}{0.282 \times 10^{-3}}} = \underline{29.68 \text{ Hz}}$$

18.17 UNIFORMLY LOADED SHAFT

Figure 18.29 shows a shaft supported at its ends and carrying a uniform mass.

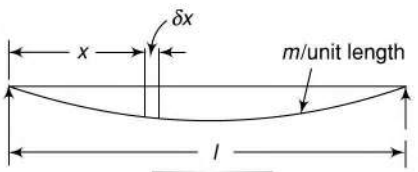

Fig. 18.29

Let m = distributed mass per unit length

l = length of the shaft

The shaft makes transverse vibrations due to elastic forces. At any instant, let it be deflected by an amount y at a distance x from the end A. The vibrations being free and due to elastic forces, will be of simple-harmonic-motion type.

From the theory of bending of shafts,

$$EI = \frac{d^4y}{dx^4} = \text{dynamic load per unit length}$$

$$= \text{centrifugal force per unit length.}$$

$$= my\,\omega^2$$

or
$$\frac{d^4y}{dx^4} - \frac{my\omega^2}{EI} = 0 \tag{18.53}$$

or
$$\frac{d^4y}{dx^4} - \lambda^4 y = 0$$

where
$$\lambda^4 = \frac{m\omega^2}{EI}$$

The auxiliary equation is

$$(D^4 - \lambda^4)\,y = 0$$

This gives

$$D = \pm\,\lambda \text{ and } \pm\,i\lambda$$

The solution will be of the form

$$y = A \sin \lambda x + B \cos \lambda x + C \sinh \lambda x + D \cosh \lambda x \tag{i}$$

This is the general expression for the deflection in case of uniformly loaded shafts. Constants A, B, C and D have to be found from the end conditions.

Simply Supported Shaft

The boundary conditions are

(a) $y = 0$ at $x = 0$ and l

(b) $\dfrac{d^2y}{dx^2} = 0$ at $x = 0$ and l (bending moment is zero at ends)

When $x = 0$, $y = 0$; $B + D = 0$ (ii)

When $x = l$, $y = 0$

$$A \sin \lambda l + B \cos \lambda l + C \sinh \lambda l + D \cosh \lambda l = 0 \quad \text{(iii)}$$

Differentiating (i) with respect to x twice,

$$\frac{dy}{dx} = \lambda (A \cos \lambda x - B \sin \lambda x + C \cosh \lambda x + D \sinh \lambda x)$$

$$\frac{d^2y}{dx^2} = \lambda^2(-A \sin \lambda x - B \cos \lambda x + C \sinh \lambda x + D \cosh \lambda x)$$

When $x = 0$,

$$\frac{d^2y}{dx^2} = 0$$

$$\therefore \quad \lambda^2 (-B + D) = 0 \quad \text{(iv)}$$

When $x = l$,

$$\frac{d^2y}{dx^2} = 0$$

$$\lambda^2(-A \sin \lambda l - B \cos \lambda l + C \sinh \lambda l + D \cosh \lambda l) = 0 \quad \text{(v)}$$

From (ii) and (iv)

$B = 0$ and $D = 0$

Thus (iii) and (v) can be written as

$$A \sin \lambda l + C \sinh \lambda l = 0$$

and

$$-A \sin \lambda l + C \sinh \lambda l = 0$$

Adding these, we get

$$C \sinh \lambda l = 0$$

Subtracting,

$$A \sin \lambda l = 0$$

$\sinh \lambda l$ cannot be zero, because if $\lambda = 0$, $\lambda^4 = 0$

or

$$\frac{m\omega^2}{EI} = 0$$

or
$$\frac{m}{EI}(2\pi f_n)^2 = 0$$

or
$$f_n = 0$$

which means that the system does not vibrate.

$\therefore$
$$C = 0$$

Thus Eq. (i) reduces to

$$y = A \sin \lambda x \qquad (B, C \text{ and } D \text{ are zero})$$

Now, when $A \sin \lambda l = 0$, A cannot be zero as B, C and D are already zero and if A is also zero, there are no vibrations.

$\therefore$
$$\sin \lambda l = 0$$

or
$$\lambda l = 0, \pi, 2\pi, 3\pi, \ldots$$

But λl cannot be equal to zero; if so, there will be no vibration.

$\therefore$
$$\lambda = \frac{\pi}{l}, \frac{2\pi}{l}, \frac{3\pi}{l}, \ldots$$

or

or
$$\left[\frac{m\omega^2}{EI}\right]^{1/4} = \frac{\pi}{l}, \frac{2\pi}{l}, \frac{3\pi}{l}, \ldots$$

or
$$\omega^{1/2} = \frac{\pi}{l}\left(\frac{EI}{m}\right)^{1/4}, \frac{2\pi}{l}\left(\frac{EI}{m}\right)^{1/4}, \frac{3\pi}{l}\left(\frac{EI}{m}\right)^{1/4}, \ldots$$

$$\omega = (2\pi f_n) = \frac{\pi^2}{l^2}\sqrt{\frac{EI}{m}}, \frac{4\pi^2}{l^2}\sqrt{\frac{EI}{m}}, \frac{9\pi^2}{l^2}\sqrt{\frac{EI}{m}}, \ldots$$

$$f_n = \frac{\pi}{2}\sqrt{\frac{EI}{ml^4}}, \frac{4\pi}{2}\sqrt{\frac{EI}{ml^4}}, \frac{9\pi}{2}\sqrt{\frac{EI}{ml^4}}$$

A simply supported shaft carrying a uniformly distributed mass has maximum deflection at the mid-span.

$$\Delta = \frac{5mgl^4}{384EI}$$

or
$$\frac{EI}{ml^4} = \frac{5g}{384\Delta}$$

Then, taking the smallest value of f_n,

$$f_n = \frac{\pi}{2}\sqrt{\frac{5g}{384\Delta}} \tag{18.54}$$

This is the lowest frequency of transverse vibrations and is called the fundamental frequency.

As the equation for the displacement is $y = A \sin \lambda l$, and at node points, $y = 0$

$$\therefore \qquad 0 = A \sin \lambda x = A \sin \frac{\pi}{l} x$$

or $$\frac{\pi}{l} x = 0, \text{ i.e., } x = 0 \text{ and } l$$

This means a node at each end.

The next higher frequency is four times the fundamental frequency.

$$0 = A \sin \lambda x = A \sin \frac{2\pi}{l} x$$

or $$\frac{2\pi}{l} x = 0 \quad \text{i.e. } x = 0, l/2 \text{ and } l$$

i.e., it has three nodes, two at the ends and one at the centre.

The next higher frequency is nine times the fundamental frequency. It has four nodes dividing the shaft into three equal parts, and so on (Fig. 18.30).

Thus a simply supported shaft will have an infinite number of frequencies under a uniformly distributed load.

Similarly, the cases of cantilevers and shafts fixed at both ends can be considered. The end conditions will be as follows.

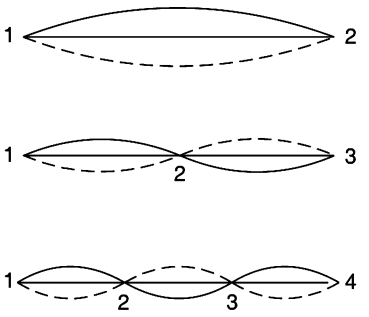

Fig. 18.30

(i) Cantilevers

$$y = 0 \text{ at } x = 0$$

(zero deflection)

$$\frac{dy}{dx} = 0 \quad \text{at} \quad x = 0 \qquad \text{(zero slope)}$$

$$\frac{d^2y}{dx^2} = 0 \quad \text{at} \quad x = l \qquad \text{(zero bending moment)}$$

$$\frac{d^3y}{dx^3} = 0 \quad \text{at} \quad x = l \qquad \text{(zero shear force)}$$

and $$\Delta = \frac{mgl^3}{8EI}$$

(ii) Both Ends Fixed

$$y = 0 \text{ at } x = 0 \text{ and } l$$

$$\frac{dy}{dx} = 0 \text{ at } x = 0 \text{ and } l$$

and $$\Delta = \frac{mgl^4}{384EI}$$

18.18 SHAFT CARRYING SEVERAL LOADS

There are two methods to find the natural frequency of the system:

(i) Dunkerley's method which is semi-empirical. This gives approximate results but is simple.
(ii) The energy method which gives accurate results but involves heavy calculations if there are many loads.

(i) Dunkerley's Method

Let W_1, W_2, W_3,.... be the concentrated loads on the shaft due to masses m_1, m_2, m_3, ... and Δ_1, Δ_2, Δ_3, ... the static deflections of this shaft under each load when that load acts alone on the shaft. Let the shaft carry a uniformly distributed mass of m per unit length over its whole span and the static deflection at mid-span due to the load of this mass be Δ_s. Also, let

f_n = frequency of transverse vibration of the whole system

f_{ns} = frequency with the distributed load acting along

f_{n1}, f_{n2}, f_{n3}, ... = frequency of transverse vibrations when each of W_1, W_2, W_3,... acts alone.

Then, according do Dunkerley's empirical formula,

$$\frac{1}{f_n^2} = \frac{1}{f_{n1}^2} + \frac{1}{f_{n2}^2} + \frac{1}{f_{n3}^2} + ... + \frac{1}{f_{ns}^2} \tag{18.55}$$

where

$$f_{n1} = \frac{1}{2\pi}\sqrt{\frac{g}{\Delta_1}} = \frac{\sqrt{9.81}}{2\pi}\frac{1}{\sqrt{\Delta_1}} = \frac{0.4985}{\sqrt{\Delta_1}}$$

Similarly,

$$f_{n2} = \frac{0.4985}{\sqrt{\Delta_2}}; f_{n3} = \frac{0.4985}{\sqrt{\Delta_3}}, \text{ and so on.}$$

$$f_{ns} = \frac{\pi}{2}\sqrt{\frac{5g}{384\Delta_s}} = \frac{\pi}{2}\sqrt{\frac{5\times 9.81}{384}} \times \frac{1}{\sqrt{\Delta_s}} = \frac{0.5614}{\sqrt{\Delta_s}}$$

$$\frac{1}{f_n^2} = \frac{1}{(0.4985)^2}(\Delta_1 + \Delta_2 + \Delta_3 + ...) + \frac{1}{(0.5614)^2}\Delta_s$$

$$= \frac{1}{(0.4985)^2}\left(\Delta_1 + \Delta_2 + \Delta_3 + ... + \frac{\Delta_s}{1.27}\right)$$

$$f_n = \frac{0.4985}{\sqrt{\Delta_1 + \Delta_2 + \Delta_3 + ... + \frac{\Delta_s}{1.27}}} \tag{18.56}$$

(ii) Energy Method

Consider a shaft with negligible mass, carrying point loads W_1, W_2, W_3,... due to masses m_1, m_2, m_3,... as shown in Fig. 18.31. Let y_1, y_2, y_3,... be the total deflection these loads.

In the extreme positions of the shaft, it possesses maximum potential energy and no kinetic energy, whereas in the mean position, it possesses maximum kinetic energy and no potential energy. Thus, the maximum potential energy of the shaft can be made equal to its maximum kinetic energy.

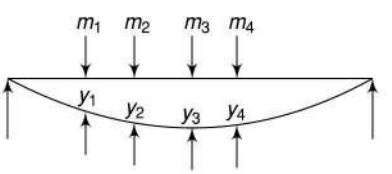

Fig. 18.31

$$\text{Maximum } PE = \frac{1}{2}W_1y_1 + \frac{1}{2}W_2y_2 + \frac{1}{2}W_3y_3 + \ldots$$
$$= \frac{g}{2}(m_1y_1 + m_2y_2 + m_3y_3 + \ldots)$$
$$= \frac{g}{2}\Sigma my$$
$$\text{Maximum } KE = \frac{1}{2}m_1v_1^2 + \frac{1}{2}m_2v_2^2 + \frac{1}{2}m_3v_3^2 + \ldots$$
$$= \frac{1}{2}m_1(\omega y_1)^2 + \frac{1}{2}m_2(\omega y_2)^2 + \frac{1}{2}m_3(\omega y_3)^2 + \ldots$$
$$= \frac{\omega^2}{2}(m_1y_1^2 + m_2y_2^2 + m_3y_3^3 + \ldots.)$$
$$= \frac{\omega^2}{2}\Sigma my^2$$

where ω is the circular frequency of vibration. Equating maximum PE and maximum KE,

$$\frac{g}{2}\Sigma my = \frac{\omega^2}{2}\Sigma my^2$$
$$\omega = \sqrt{\frac{g\Sigma my}{\Sigma my^2}}$$
$$f_n = \frac{\omega}{2\pi} = \frac{1}{2\pi}\sqrt{\frac{g\Sigma my}{\Sigma my^2}} \tag{18.57}$$

Example 18.17 *A shaft of 40-mm diameter and 2.5-m length has a mass of 15 kg per metre length. It is simply supported at the ends and carries three masses of 90 kg, 140 kg and 60 kg at 0.8 m, 1.5 m and 2 m respectively from the left support. Taking E = 200 GN/m², find the frequency of the transverse vibrations.*

Solution

$d = 40$ mm $= 0.04$ m $\quad l = 2.5$ m

$$I = \frac{\pi}{64}\times d^4 = \frac{\pi}{64}\times(0.04)^4$$
$$= 0.1257\times10^{-6}\ \text{m}^4$$

We have,

$$f_n = \frac{0.4985}{\sqrt{\Delta_1 + \Delta_2 + \Delta_3 + \ldots. + \dfrac{\Delta_s}{1.27}}}$$

$$\Delta_1 = \frac{mga^2b^2}{3EIl}$$

Here $m = 90$ kg, $a = 0.8$ m and $b = 1.7$ m.

$$\therefore \quad \Delta_1 = \frac{90\times9.81\times(0.8)^2\times(1.7)^2}{3\times200\times10^9\times0.1257\times10^{-6}\times2.5}$$
$$= 0.008\ 66\ \text{m}$$

For Δ_2, $m = 140$ kg, $a = 1.5$ m, $b = 1$ m

$$\therefore \quad \Delta_1 = \frac{140\times9.81\times(1.5)^2\times(1)^2}{3\times200\times10^9\times0.1257\times10^{-6}\times2.5}$$
$$= 0.1639\ \text{m}$$

For Δ_3, $m = 60$ kg, $a = 2$ m, $b = 0.5$ m

$$\therefore \quad \Delta_3 = \frac{60\times9.81\times(2)^2\times(0.5)^2}{3\times200\times10^9\times0.1257\times10^{-6}\times2.5}$$
$$= 0.003\ 12\ \text{m}$$

$$\Delta_s = \frac{5mgl^4}{384El} = \frac{5 \times 15 \times 9.81 \times (2.5)^4}{384 \times 200 \times 10^9 \times 0.1257 \times 10^{-6}}$$
$$= 0.002\ 98 \text{ m}$$

$$f_n = \frac{0.4985}{\sqrt{0.008\,66 + 0.016\,39 + 0.00312 + \dfrac{0.002\,98}{1.27}}}$$
$$= 2.85 \text{ Hz}$$

18.19 WHIRLING OF SHAFTS

When a rotor is mounted on a shaft, its centre of mass does not usually coincide with the centre line of the shaft. Therefore, when the shaft rotates, it is subjected to a centrifugal force which makes the shaft bend in the direction of eccentricity of the centre of mass. This further increases the eccentricity, and hence the centrigugal force. In this way, the effect is cumulative and ultimately the shaft may even fail. The bending of the shaft depends upon the eccentricity of the centre of mass of the rotor as also upon the speed at which the shaft rotates.

Critical or *whirling* or *whipping speed* is the speed at which the shaft tends to vibrate violently in the transverse direction.

It has been observed that if the critical speed is instantly run through, the shaft again becomes almost straight. But at some other speed, the same phenomenon recurs, the only difference being that the shaft now bends in two bows, and so on.

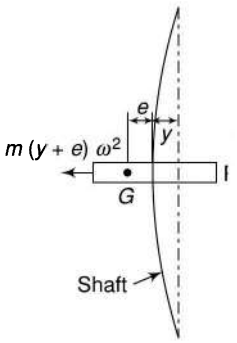

Fig. 18.32

Figure 18.32 shows a rotor having a mass m attached to a shaft.

Let s = stiffness of shaft

e = initial eccentricity of centre of mass of rotor

m = mass of rotor

y = additional deflection of rotor due to centrifugal force

ω = angular velocity of shaft.

Then

Centrifugal force $= m(y + e)\,\omega^2$

Force resisting the deflection $= sy$

For equilibrium,

$$sy = m(y + e)\,\omega^2 = my\,\omega^2 + me\,\omega^2$$

or $\quad y(s - m\,\omega^2) = me\,\omega^2$

$$y = \frac{me\omega^2}{s - m\omega^2} = \frac{e}{\dfrac{s}{m\omega^2} - 1} = \frac{e}{\left(\dfrac{\omega_n}{\omega}\right)^2 - 1}$$

Lab set up to find the whirling speed of shafts

Thus when $\omega = \omega_n$, the deflection y is infinitely large (resonance occurs) and the speed ω is the critical speed, i.e.

$$\omega_c = \omega_n = \sqrt{\frac{s}{m}} = \sqrt{\frac{g}{\Delta}} \tag{18.58}$$

If the speed of the shaft is increased rapidly beyond the critical speed, $\omega > \omega_n$ or $(\omega_n/\omega)^2 < 1$ or y is negative. This means that the shaft deflects in the opposite direction. As the speed continues to increase, y approaches the value $-e$ or the centre of mass of the rotor approaches the centre line of rotation. This principle is used in running high-speed turbines by speeding up the rotor rapidly or beyond the critical speed. When y approaches the value of $-e$, the rotor runs steadily.

Example 18.18 *Determine the critical speed of the shaft of Example 18.17 loaded in the same way.*

Solution The critical speed of the shaft in revolutions per second is equal to the natural frequency of transverse vibrations in Hz.

$f_n = 2.85$ Hz

$N_c = 2.85$ rps $= (2.85 \times 60)$ rpm $= 171$ rpm

Example 18.19 *A rotor has a mass of 12 kg and is mounted midway on a 24-mm diameter horizontal shaft supported at the ends by two bearings. The bearings are 1 m apart. The shaft rotates at 2400 rpm. If the centre of mass of the rotor is 0.11 mm away from the geometric centre of the rotor due of a certain manufacturing defect, find the amplitude of the steady-state vibration and the dynamic force transmitted to the bearing. E = 200 GN/m².*

Solution Assuming the bearings to be short so that the shaft can be assumed to be simply supported,

$m = 12$ kg $\qquad l = 1$ m

$d = 0.024$ m $\qquad N = 2400$ rpm

$e = 0.11$ mm $\qquad E = 200 \times 10^9$ N/m²

$$I = \frac{\pi}{64} \times d^4 = \frac{\pi}{64} \times (0.024)^4 = 16.3 \times 10^{-9} \text{ m}^4$$

$$\Delta = \frac{mgl^3}{48EI} = \frac{12 \times 9.81 \times (1)^3}{48 \times 200 \times 10^9 \times 16.3 \times 10^{-9}}$$

$$= 0.000\ 752 \text{ m}$$

$$\omega_n = \sqrt{\frac{g}{\Delta}} = \sqrt{\frac{9.81}{0.000\ 752}} = 114.2 \text{ rad/s}$$

$$\omega = \frac{2\pi N}{60} = \frac{2\pi \times 2400}{60} = 251.3 \text{ rad/s}$$

Amplitude,

$$y = \frac{e}{\left(\frac{\omega_n}{\omega}\right)^2 - 1} = \frac{0.11}{\left(\frac{114.2}{251.3}\right)^2 - 1} = -0.139 \text{ mm}$$

$$= -0.000\ 139 \text{ m}$$

The negative sign indicates that the displacement is out of phase with the centrifugal force.

Dynamic force on the bearings $= sy$

$= m\omega_n^2 y$

$= 12 \times (114.2)^2 \times 0.000\ 139$

$= \underline{21.7 \text{ N}}$

The total load on each bearing can also be found.

Total load on each bearing

$$= \frac{mg}{2} + \frac{sy}{2} = \frac{12 \times 9.81}{2} + \frac{21.7}{2} = 69.7 \text{ N}$$

Example 18.20 *The following data relate to a shaft held in long bearings.*

Length of shaft	*= 1.2 m*
Diameter of shaft	*= 14 m*
Mass of a rotor at midpoint	*= 16 kg*
Eccentricity of centre of mass of rotor from centre of rotor	*= 0.4 mm*
Modulus of elasticity of shaft material	*= 200 GN/m²*
Permissible stress in shaft material	*= 70 × 10⁶ N/m²*

Determine the critical speed of the shaft and the range of speed over which it is unsafe to run the shaft. Assume the shaft to be massless.

Solution

$m = 16$ kg $\qquad e = 0.0004$ m

$l = 1.2$ m $\qquad E = 200 \times 10^9$ N/m²

$d = 0.014$ m $\qquad f = 70 \times 10^6$ N/m²

(i) As the shaft is held in long bearings, it may be assumed to be fixed at the ends.

$$\Delta = \frac{mgl^3}{192El} = \frac{16 \times 9.81 \times (1.2)^3}{192 \times 200 \times 10^9 \times \frac{\pi}{64} \times (0.014)^4}$$

$= 0.003\,75$ m

$$f_n = \frac{1}{2\pi}\sqrt{\frac{g}{\Delta}} = \frac{1}{2\pi}\sqrt{\frac{9.81}{0.003\,75}} = 8.143 \text{ Hz}$$

The critical speed of the shaft in rps is equal to the natural frequency of transverse vibrations in Hz, i.e.,

$N_c = 8.143$ rps = 489 rpm

(ii) When the shaft rotates, additional dynamic load on the shaft can be obtained from the relation

$$\frac{M}{I} = \frac{f}{y}$$

$$\frac{\frac{W_1 l}{8}}{\frac{\pi}{64} \times d^4} = \frac{f}{d/2}$$

or

$$\frac{\frac{W_1 \times 1.2}{8}}{\frac{\pi}{64} \times (0.014)^4} = \frac{70 \times 10^6}{\frac{0.014}{2}}$$

$W_1 = 125.7$ N

Additional deflection due to this load

$$= \frac{W_1}{W} \times \Delta$$

$$= \frac{W_1}{mg} \times \Delta$$

$$= \frac{125.7}{16 \times 9.81} \times 0.003\,75$$

$= 0.003$ m

Also,

Additional deflection, $y = \dfrac{\pm e}{\left(\dfrac{\omega_c}{\omega}\right)^2 - 1}$

$$0.003 = \frac{\pm 0.0004}{\left(\frac{N_c}{N}\right)^2 - 1}$$

or

$$\left(\frac{489}{N}\right)^2 - 1 = \pm 0.1333$$

$N =$ 459 and 525

Thus, the range of unsafe speed is from 459 rpm to 525 rpm.

SECTION III (TORSIONAL VIBRATION)

18.20 FREE TORSIONAL VIBRATIONS (SINGLE ROTOR)

Consider a uniform shaft of length l rigidly fixed at its upper end and carrying a disc of moment of inertia I at its lower end (Fig. 18.33). The shaft is assumed to be massless. If the disc is given a twist about its vertical axis and then released, it will start oscillating about the axis and will perform torsional vibrations.

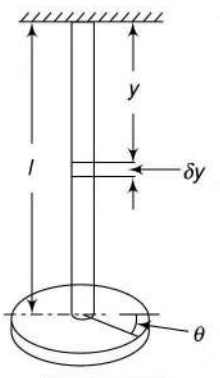

Fig. 18.33

Let θ = angular displacement of the disc from its equilibrium position at any instant

q = torsional stiffness of the shaft

= torque required to twist the shaft per radian within elastic limits $= \left(\dfrac{GJ}{l}\right)$

where

G = modulus of rigidly of the shaft material

J = polar moment of inertia of the shaft cross-section

At any instant, the torques acting on the disc are

- Inertia torque $= -I\ddot{\theta}$
- Restoring torque (spring torque) $= -q\theta$

Negative signs have been used as both of these torques act opposite to the angular displacement.
For equilibrium, the sum of all torques acting on the disc must be zero.
Therefore,

$$I\ddot{\theta} + q\theta = 0$$

or

$$\ddot{\theta} + \frac{q}{I}\theta = 0$$

This is the equation of simple harmonic motion.

$$\omega_n = \sqrt{\frac{q}{I}} \tag{18.59}$$

$$f_n = \frac{1}{2\pi}\sqrt{\frac{q}{I}} \tag{18.59a}$$

18.21 INERTIA EFFECT OF MASS OF SHAFT

Let I_1 = moment of inertia of shaft
ω = angular velocity of free end
Consider an element of length δy at a distance y from the fixed end. Then

$$KE \text{ of element } = \frac{1}{2} \times (MOI \text{ of element}) \times (\text{angular velocity})^2$$

$$= \frac{1}{2} \times \left(I_1 \frac{\delta y}{1}\right)\left(\frac{\omega y}{l}\right)^2$$

$$\text{KE of shaft } = \int_0^l \frac{1}{2} \times \frac{I_1}{l}\left(\frac{y}{l}\omega\right)^2 dy$$

$$= \frac{I_1\omega^2}{2l^2}\int_0^l y^2 dy$$

$$= \frac{I_1\omega^2}{2l^3} \times \frac{l^3}{3}$$

$$= \frac{1}{3}\frac{1}{2} I_1\omega^2$$

$$= \frac{1}{3} \times \left[\frac{1}{2}(MOI \text{ of shaft}) \times (\text{angular velocity of free end})^2\right]$$

$$= \frac{1}{3} \times \text{KE of a disc of } MOI \text{ equal to that of the shaft}$$

attached to the free end of the shaft.

Thus to consider the inertia of the shaft, the moment of inertia of the disc is increased by an amount equal to one-third of that of the shaft.

Then

$$f_n = \frac{1}{2\pi}\sqrt{\frac{q}{I + \frac{I_1}{3}}} \tag{18.60}$$

18.22 MULTIFILAR SYSTEMS

Multifilar systems are used to determine the moment of inertia of irregular bodies such as unsymmetrical castings, spoked flywheels, connecting rods, etc., for which it is quite difficult to find their moment of inertia from their dimensions.

(i) Bifilar Suspension

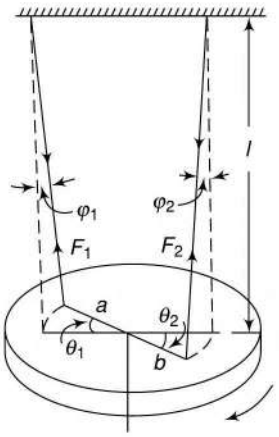

Fig. 18.34

Figure 18.34 represents a disc of mass m suspended from a rigid support with the help of two cords.

Let l = length of each cord

a and b = distance of centre of mass of the disc from the points of suspension of cords 1 and 2 respectively.

If the disc is now turned through a small angle θ about a vertical axis through the centre of mass, the cords will inclined to the vertical. On release, the disc will oscillate about the vertical axis and execute a torsional vibration.

Let θ = angular displacement of disc

φ_1, φ_2 = inclination of cords to the vertical

F_1, F_2 = tensions in cords 1 and 2 respectively

In the oscillating position, the effects of vertical accelerations can be neglected as the angles φ_1 and φ_2 are small and the torque produced can be considered to be only due to horizontal torques.

Restoring torque = (horizontal force on cord 1 × a) + (horizontal force on cord 2 × b)

$$= -[F_1 a \sin \varphi_1 + F_2 b \sin \varphi_2]$$

$$= -[F_1 a\, \varphi_1 + F_2 b\, \varphi_2] \qquad \text{(as } \varphi_1 \text{ and } \varphi_2 \text{ are small)}$$

$$= -\left[\frac{Wb}{a+b} a\varphi_1 + \frac{Wa}{a+b} b\varphi_2\right] \qquad (W = \text{Weight of disc} = mg)$$

$$= -\frac{Wab}{a+b}(\varphi_1 + \varphi_2)$$

$$= -\frac{Wab}{a+b}\left(\frac{a\theta}{l} + \frac{b\theta}{l}\right) \qquad (\varphi_1 l = a\theta \text{ and } \varphi_2 l = b\theta)$$

$$= -\frac{Wab}{(a+b)} \times \frac{\theta(a+b)}{l}$$

$$= -\frac{mgab}{l}\theta$$

Inertia torque = $-I\ddot{\theta} = -mk^2\ddot{\theta}$

Where k is the radius of gyration of the disc about the vertical axis through the centre of mass.

For equilibrium,

Inertia torque + Restoring torque = 0

$$mk^2\ddot{\theta} + \frac{mgab}{l}\theta = 0$$

or

$$\ddot{\theta} + \frac{gab}{lk^2}\theta = 0$$

$\therefore$

$$f_n = \frac{1}{2\pi}\sqrt{\frac{gab}{lk^2}}$$

or

$$k = \frac{1}{2\pi f_n}\sqrt{\frac{gab}{l}} \tag{18.61}$$

Thus radius of gyration can be found out by finding the natural frequency of vibration of the body.

(ii) Trifilar Suspension

Consider a disc of mass m (weight W), suspended by three vertical cords, each of length l, from a fixed support as shown in Fig. 18.35. Each cord is symmetrically attached to the disc at the same distance from the centre of mass of the disc.

If the disc is now turned through a small angle about its vertical axis, the cords become inclined. On being released, the disc will perform oscillations about the vertical axis. At any instant

let θ = angular displacement of the disc

φ = inclination of the cords to the vertical

F = tension in each cord = $W/3$

Inertia torque = $-I\ddot{\theta} = -mk^2\ddot{\theta}$

Restoring torque = $-3 \times$ (Horizontal component of force in each string $\times r$)

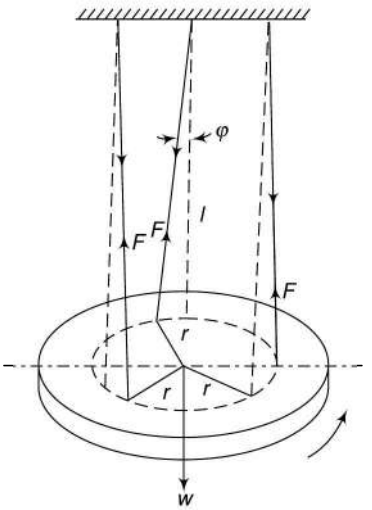

Fig. 18.35

$$= -3 \times Fr \sin\varphi$$

$$= -3\,Fr\,\varphi \qquad \text{(as } \varphi \text{ is small)}$$

$$= -3Fr\frac{\theta r}{l} \qquad (\because \varphi l = \theta r)$$

$$= -\frac{3W}{3} \times \frac{r^2}{l}\theta$$

$$= -\frac{mgr^2}{l}\theta$$

$$mk^2\ddot{\theta} + \frac{mgr^2}{l}\theta = 0$$

$$\ddot{\theta} + \frac{gr^2}{lk^2}\theta = 0$$

$$f_n = \frac{1}{2\pi}\sqrt{\frac{gr^2}{lk^2}}$$

$$k = \frac{r}{2\pi f_n}\sqrt{\frac{gr^2}{l}} \tag{18.62}$$

Example 18.21 *Determine the frequency of torsional vibrations of the disc shown in Fig. 18.36 if both the ends of the shaft are fixed and the diameter of the shaft is 40 mm. The disc has a mass of 96 kg and a radius of gyration of 0.4 m. Take modulus of rigidity for the shaft material as 85 GN/m². l_1 = 1m and l_2 = 0.8 m.*

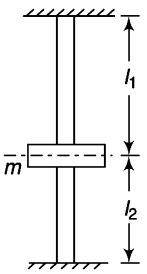

Fig. 18.36

Solution

$m = 96$ kg $\quad G = 85 \times 10^9$ N.m²

$k = 0.4$ m $\quad d = 0.04$ m

$$I = mk^2 = 96 \times (0.4)^2$$
$$= 15.36 \text{ kg.m}^2$$
$$J = \frac{\pi}{32} d^4 = \frac{\pi}{32} \times (0.04)^4$$
$$= 0.251 \times 10^{-6} \text{ m}^4$$

Total torsional stiffness of shaft, $q = q_1 + q_2$

$$= \frac{GJ}{l_1} + \frac{GJ}{l_2}$$
$$= 85 \times 10^9 \times 0.251 \times 10^{-6} \left(\frac{1}{1} + \frac{1}{0.8}\right)$$
$$= 48\ 004 \text{ N.m}$$
$$f_n = \frac{1}{2\pi}\sqrt{\frac{q}{I}}$$
$$= \frac{1}{2\pi}\sqrt{\frac{48\ 004}{15.36}}$$
$$= \underline{8.9 \text{ Hz}}$$

Example 18.22 *Determine the natural frequency of a simple pendulum (Fig. 18.37), taking the mass of the rod into consideration.*

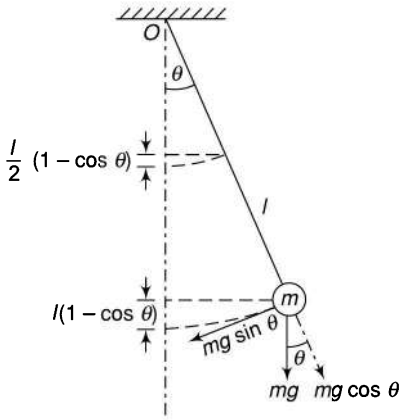

Fig. 18.37

Solution

Equilibrium Method

Taking moments about θ,

$$I_0\ddot{\theta} + mg(l\sin\theta) + m_r g\left(\frac{l}{2}\sin\theta\right) = 0$$

$$\left(ml^2 + \frac{m_r}{3}l^2\right)\ddot{\theta} + mgl\theta + m_r gl\frac{\theta}{2} = 0 \quad (\theta \text{ is small})$$

$$\left(m + \frac{m_r}{3}\right)l^2\ddot{\theta} + gl\left(m + \frac{m_r}{2}\right)\theta = 0$$

$$\ddot{\theta} + \frac{g}{l}\left(\frac{m + \frac{m_r}{2}}{m + \frac{m_r}{3}}\right)\theta = 0$$

$$f_n = \frac{1}{2\pi}\sqrt{\frac{g}{l}\frac{m + (m_r/2)}{m + (m_r/3)}}$$

Energy Method At any instant,

$$\frac{d}{dt}(KE + PE) = 0$$

or

$$\frac{d}{dt}\left[\frac{1}{2}I_0\dot{\theta}^2 + \left\{\begin{matrix} mgl(1-\cos\theta) \\ +m_r g\frac{1}{2}(1-\cos\theta) \end{matrix}\right\}\right] = 0$$

or

$$\frac{d}{dt}\left[\begin{matrix} \frac{1}{2}\left(m + \frac{m_r}{3}\right)l^2\dot{\theta}^2 + gl \\ \left(m + \frac{m_r}{3}\right)(1-\cos\theta) \end{matrix}\right] = 0$$

or

$$\frac{1}{2}\left(m+\frac{m_r}{3}\right)l^2(2\dot{\theta}\ddot{\theta})+gl$$

$$\left(m+\frac{m_r}{3}\right)\sin\theta\dot{\theta}=0$$

or

$$\left(m+\frac{m_r}{3}\right)l\ddot{\theta}+g\left(m+\frac{m_r}{3}\right)\theta=0...$$

(θ is small)

or

$$\ddot{\theta}+\frac{g}{l}\left(\frac{m+\frac{m_r}{2}}{m+\frac{m_r}{3}}\right)\theta=0$$

$$f_n=\frac{1}{2\pi}\sqrt{\frac{g}{l}\frac{m+\frac{m_r}{2}}{m+\frac{m_r}{3}}}$$

If the mass of the rod is neglected,

$$f_n=\frac{1}{2\pi}\sqrt{\frac{g}{l}}$$

Example 18.23 *Find the natural frequency of the oscillation in the cases shown in Fig. 18.38(a) and (b). The roller rolls on the surface without slipping.*

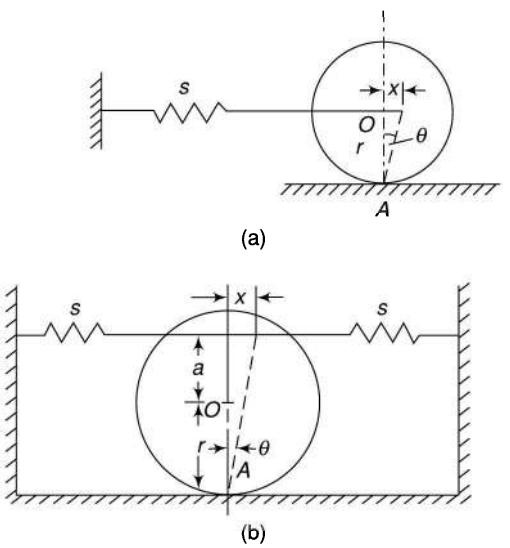

Fig. 18.38

Solution

(a) *Equilibrium (Newton's Method)*

Taking moments about the instantaneous centre A, considering small oscillations of the disc,

$$I_a\ddot{\theta}+(sx)r=0$$

or $(I_0+mr^2)\ddot{\theta}+(s\,\theta\,r)\,r=0$

or $$\left(\frac{1}{2}mr^2+mr^2\right)\ddot{\theta}+sr^2\theta=0$$

or $$\ddot{\theta}+\frac{sr^2}{\frac{3}{2}mr^2}\theta=0$$

or $$\ddot{\theta}+\frac{2s}{3m}\theta=0$$

$$f_n=\frac{1}{2\pi}\sqrt{\frac{2s}{3m}}\text{ Hz}$$

Energy Method

$$\frac{d}{dt}(KE+PE)=0$$

$$\frac{d}{dt}\left[\frac{1}{2}I_a\dot{\theta}^2+\frac{1}{2}sx^2\right]=0$$

$$\frac{d}{dt}\left[\frac{1}{2}\left(\frac{3}{2}mr^2\right)\dot{\theta}^2+\frac{1}{2}s(\theta r)^2\right]=0$$

$$\frac{d}{dt}\left[\frac{3}{4}mr^2\dot{\theta}^2+\frac{1}{2}sr^2\theta^2\right]=0$$

$$\frac{3}{4}mr^2\times2\dot{\theta}\ddot{\theta}+\frac{1}{2}sr^2\times2\theta\dot{\theta}=0$$

$$\ddot{\theta}+\frac{2s}{3m}\theta=0$$

i.e., the same equation as before.

(b) *Newton's Method*

Taking moments about A.

$I_a\ddot{\theta}+2(sx)(r+a)=0$ (there are two springs)

$(I_0+mr^2)\ddot{\theta}+2s\,[(r+a)\theta](r+a)=0$

or $$\left(\frac{1}{2}mr^2+mr^2\right)\ddot{\theta}+2s(r+a)^2\theta=0$$

or $$\frac{3}{2}mr^2\ddot{\theta} + 2s(r+a)^2\theta = 0$$

$$\ddot{\theta} + \frac{4}{3}\frac{s(r+a)^2}{mr^2}\theta = 0$$

$$f_n = \frac{1}{2\pi}\sqrt{\frac{4s(r+a)^2}{3mr^2}} \text{ Hz}$$

Energy Method

$$\frac{d}{dt}(KE + PE) = 0$$

$$\frac{d}{dt}\left[\frac{1}{2}\left(\frac{3}{2}mr^2\right)\dot{\theta}^2 + 2\times\frac{1}{2}sx^2\right] = 0$$

$$\frac{d}{dt}\left[\frac{3}{4}mr^2\dot{\theta}^2 + s\{(r+a)\theta\}^2\right] = 0$$

$$\frac{3}{4}mr^2 \times 2\dot{\theta}\ddot{\theta} + S(r+a)^2 2\theta\dot{\theta} = 0$$

$$\ddot{\theta} + \frac{4}{3}\frac{s(r+a)^2}{mr^2}\theta = 0$$

i.e., the same equation.

Example 18.24 *Find the equation of motion and the natural frequency of the systems shown in Fig. 18.39(a) and (b).*

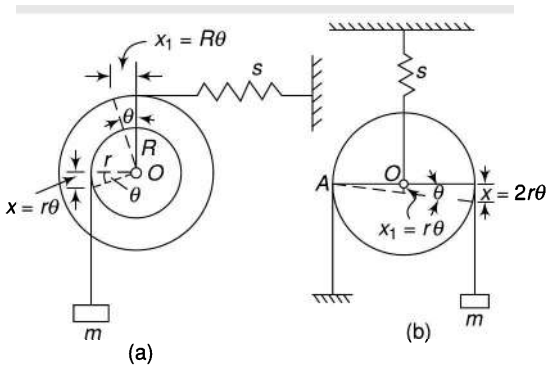

Fig. 18.39

Solution

(a) *Equilibrium Method*

Let I_0 = combined *MOI* of disc about *O*.

$$x = r\,\theta$$

$$\dot{x} = r\dot{\theta}$$

$$\ddot{x} = r\ddot{\theta}$$

$$x_1 = R\,\theta$$

Taking moments about *O*,

$$I_a\ddot{\theta} + (m\ddot{x})r + (sx_1)\,R = 0$$

$$I_0\ddot{\theta} + mr\ddot{\theta}r + sR^2\,\theta = 0$$

$$(I_0 + mr^2)\,\ddot{\theta} + sR^2\,\theta = 0$$

$$\ddot{\theta} + \left(\frac{sR^2}{I_0 + mr^2}\right)\theta = 0$$

$$f_n = \frac{1}{2\pi}\sqrt{\frac{sR^2}{I_0 + mr^2}} \text{ Hz}$$

Energy Method

$$\frac{d}{dt}(KE + PE) = 0$$

$$\frac{d}{dt}\left[\left(\frac{1}{2}I_0\dot{\theta}^2 + \frac{1}{2}m\dot{x}^2\right) + \left(\frac{1}{2}sx_1^2\right)\right] = 0$$

$$\frac{d}{dt}\left[\frac{1}{2}I_0\dot{\theta}^2 + \frac{1}{2}m(r\dot{\theta})^2 + \frac{1}{2}s(R\theta)^2\right] = 0$$

$$\frac{1}{2}\frac{d}{dt}[I_0\dot{\theta}^2 + mr^2\dot{\theta}^2 + sR^2\theta^2] = 0$$

$$(I_0 + mr^2) \times 2\dot{\theta}\ddot{\theta} + sR^2 \times 2\,\theta\dot{\theta} = 0$$

$$\ddot{\theta} + \left(\frac{sR^2}{I_0 + mr^2}\right)\theta = 0$$

i.e., the same equation and hence the same frequency.

(b) *Equilibrium Method*

$$x = 2r\theta$$

$$\dot{x} = 2r\dot{\theta}$$

$$\ddot{x} = 2r\ddot{\theta}$$

$$x_1 = r\theta$$

Taking moments about *A*,

$$(I_0 + m_0r^2)\,\ddot{\theta} + (m\ddot{x})2r + (sx_1)\,r = 0$$

$$(I_0 + m_0r^2)\,\ddot{\theta} + m(2r\ddot{\theta})2r + s(r\theta)r = 0$$

$$(I_0\,\theta + m_0r^2 + 4mr^2)\,\ddot{\theta} + sr^2\theta = 0$$

Energy Method

$$\frac{d}{dt}(KE + PE) = 0$$

$$\frac{d}{dt}\left[\left\{\begin{matrix}\frac{1}{2}(I_0+m_0r^2)\\ \dot{\theta}^2+\frac{1}{2}m\dot{x}^2\end{matrix}\right\}+\frac{1}{2}sx_1^2\right]=0$$

$$\frac{d}{dt}\left[\begin{matrix}\frac{1}{2}(I_0+m_0r^2)\dot{\theta}^2+\frac{1}{2}m\\ (2r\dot{\theta})^2+\frac{1}{2}s(r\theta)^2\end{matrix}\right]=0$$

$$\frac{d}{dt}\left[\begin{matrix}\frac{1}{2}(I_0+m_0r)^2\dot{\theta}^2\\ +2mr^2\dot{\theta}^2+\frac{sr^2}{2}\theta^2\end{matrix}\right]=0$$

$$\left[\begin{matrix}\frac{1}{2}(I_0+m_0r)^2 2\dot{\theta}\ddot{\theta}+2mr^2\\ \times 2\dot{\theta}\ddot{\theta}+\frac{sr^2}{2}\times 2\theta\dot{\theta}\end{matrix}\right]=0$$

$$(I_0+m_0r^2+4mr^2)\,\ddot{\theta}+sr^2\theta=0$$

(the same equation)

or

$$\ddot{\theta}+\frac{sr^2}{I_0+m_0r^2+4mr^2}\theta=0$$

$$f_n=\frac{1}{2\pi}\sqrt{\frac{sr^2}{I_0+m_0r^2+4mr^2}}$$

18.23 FREE TORSIONAL VIBRATIONS (TWO-ROTOR SYSTEM)

If a shaft held in bearings carries a rotor at each end, it can vibrate torsionally such that the two rotors move in the opposite directions. Thus some length of the shaft is twisted in one direction while the rest is twisted in the other. The section which does not undergo any twist is called the nodal section. The shaft behaves as if clamped at the nodal section and the two sections vibrate as two separate shafts with equal frequencies (Fig. 18.40).

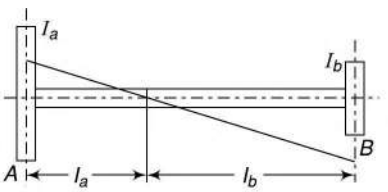

Fig. 18.40

Let

l_a and l_b = lengths of two portions of the shaft

I_a and I_b = *MOI* of rotors *A* and *B* respectively

q_a and q_b = torsional stiffness of lengths l_a and l_b of the shaft respectively

f_{na} and f_{nb} = natural frequencies of torsional vibrations of rotors *A* and *B* respectively

Then

$$f_{na}=f_{nb}$$

$$\therefore \quad \frac{1}{2\pi}\sqrt{\frac{q_a}{I_a}}=\frac{1}{2\pi}\sqrt{\frac{q_b}{I_b}}$$

or

$$\frac{q_a}{I_a}=\frac{q_b}{I_b}$$

or

$$\frac{GJ}{l_aI_a}=\frac{GJ}{l_bI_b}$$

or

$$\frac{l_a}{l_b}=\frac{I_b}{I_b} \text{ or } I_al_a=I_bl_b \tag{18.63}$$

Thus the node divides the length of the shaft in the inverse ratio of moment of inertias of the two rotors. Also

$$\frac{\text{Amplitude of rotor } A}{\text{Amplitude of rotor } B} = \frac{A_a}{A_b} = \frac{l_a}{l_b}$$

18.24 FREE TORSIONAL VIBRATIONS (THREE-ROTOR SYSTEM)

Consider a three-rotor system [Fig. 18.41(a)] in which the two rotors A and B are fixed to the ends of the shaft, and the rotor C is in between. Let the rotors A and B rotate in the same direction and C in the opposite direction and the node points lie at D and E as shown in [Fig. 18.41 (b)].

Let I_a, I_b and I_c be the mass moments of inertia of rotors A, B and C respectively. l_1, l_2, l_a and l_c are the distances as indicated in the diagram.

Now,

$$f_{na} = f_{nb} = f_{nc}$$

or $$\frac{1}{2\pi}\sqrt{\frac{q_a}{I_a}} = \frac{1}{2\pi}\sqrt{\frac{q_b}{I_b}} = \frac{1}{2\pi}\sqrt{\frac{q_c}{I_c}}$$

or $$\frac{q_a}{I_a} = \frac{q_b}{I_b} = \frac{q_c}{I_c}$$

The torque required to produce unit twist of C is the sum of torques required to produce a unit twist in each of the lengths l_{c1} and l_{c2}.

$$\therefore \quad \frac{GJ}{l_a I_a} = \left(\frac{GJ}{l_{c1}} + \frac{GJ}{l_{c2}}\right)\frac{1}{I_c} = \frac{GJ}{l_b I_b}$$

or $$\frac{1}{l_a I_a} = \left(\frac{1}{l_1 - l_a} + \frac{1}{l_2 - l_b}\right)\frac{1}{I_c} - \frac{1}{l_b I_b} \qquad (18.64)$$

As $l_a I_a = l_b I_b$ length l_b can be expressed in terms of l_b and a quadratic equation in l_b can be obtained.

- One set of values given by the quadratic equation gives the position of two nodes and the frequency thus obtained is known as *two-node frequency*.
- In the other set of values, one gives the position of a single node and the other is beyond the physical limits of the equation. The frequency so obtained is known as *single-node frequency* or *fundamental frequency.*

If A and C rotate in the same direction and B rotates in the opposite direction, a single node is obtained between B and C [Fig. 18.41(c)]. (l_a does not give the actual node point.)

Similarly, if B and C rotate in the same direction

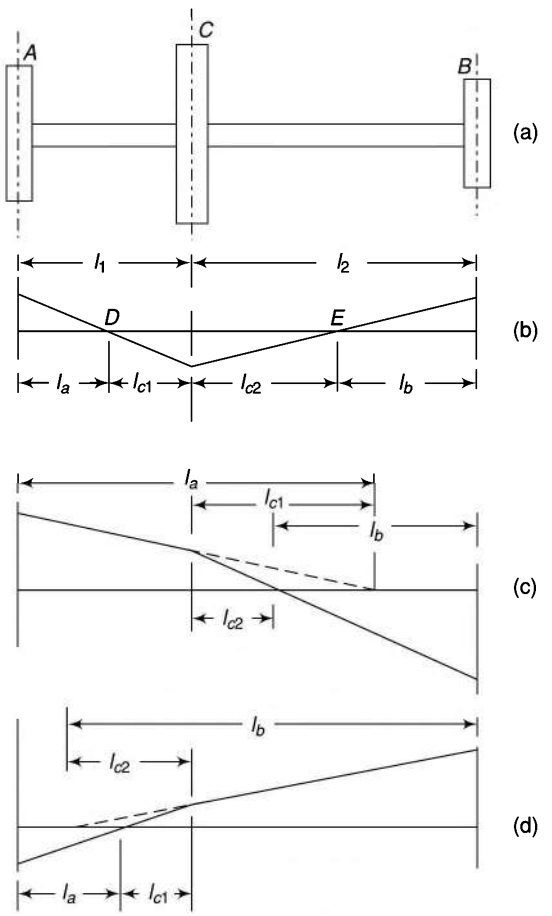

Fig. 18.41

and A in the opposite direction, a single node is obtained between A and C [Fig. 18.41(d)]. (l_b does not give the actual node point.)

A_a, A_b and A_c be the amplitudes of rotors A, B and C respectively.

Then

$$\frac{A_a}{A_c} = \frac{l_a}{l_{c1}} \quad \text{and} \quad \frac{A_b}{A_c} = \frac{l_b}{l_{c2}}$$

In general, the possible number of node points and frequencies is one less than the number of rotors in torsional vibrating system.

18.25 TORSIONALLY EQUIVALENT SHAFT

Sometimes, rotors are fixed to a shaft of various diameters at different sections. The most convenient manner of finding the frequency of such a system is by replacing the shaft with a torsionally equivalent shaft having a suitable diameter. A torsionally equivalent shaft is one which has the same torsional stiffness as that of the stepped shaft so that it twists to the same extent under a given torque as the stepped shaft would.

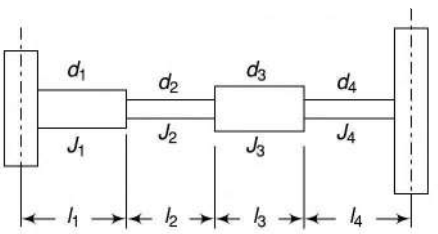

Fig. 18.42

Let θ be the total twist in the shaft under an applied torque T, and θ_1, θ_2, θ_3 and θ_4 be the twists in sections l_1, l_2, l_3 and l_4 respectively (Fig.18.42).

$$\theta = \theta_1 + \theta_2 + \theta_3 + \theta_4$$

$$= \frac{Tl_1}{GJ_1} + \frac{Tl_2}{GJ_2} + \frac{Tl_3}{GJ_3} + \frac{Tl_4}{GJ_4}$$

Let d and l be the diameter and the length respectively of the torsionally equivalent shaft.

Then

$$\frac{Tl}{GJ} = \frac{Tl_1}{GJ_1} + \frac{Tl_2}{GJ_2} + \frac{Tl_3}{GJ_3} + \frac{Tl_4}{GJ_4}$$

or

$$\frac{l}{J} = \frac{l_1}{J_1} + \frac{l_2}{J_2} + \frac{l_3}{J_3} + \frac{l_4}{J_4}$$

or

$$\frac{l}{\frac{\pi}{32}d^4} = \frac{l_1}{\frac{\pi}{32}d_1^4} + \frac{l_2}{\frac{\pi}{32}d_2^4} + \frac{l_3}{\frac{\pi}{32}d_3^4} + \frac{l_4}{\frac{\pi}{32}d_4^4}$$

or

$$\frac{l}{d^4} = \frac{l_1}{d_1^4} + \frac{l_2}{d_2^4} + \frac{l_3}{d_3^4} + \frac{l_4}{d_4^4}$$

or

$$l = l_1\left(\frac{d}{d_1}\right)^4 + l_2\left(\frac{d}{d_2}\right)^4 + l_3\left(\frac{d}{d_3}\right)^4 + l_4\left(\frac{d}{d_4}\right)^4$$

The diameter d is usually chosen as one of the existing diameters of the stepped shaft.

Example 18.25 *The shaft shown in Fig. 18.43 carries two masses. The mass A is 300 kg with a radius of gyration of 0.75 m and the mass B is 500 kg with a radius of gyration of 0.9 m. Determine the frequency of the torsional vibrations. It is desired to have the node at the mid-section of the shaft of 120-mm diameter by changing the diameter of the section having a 90-mm diameter. What will be the new diameter?*

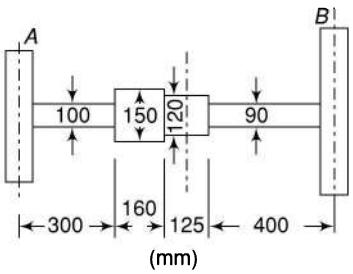

Fig. 18.43

Solution

(a) Reducing the shaft to a torsionally equivalent shaft of 100 mm diameter.

$$l = 300\left(\frac{100}{100}\right)^4 + 160\left(\frac{100}{150}\right)^4$$

$$+125\left(\frac{100}{120}\right)^4 + 400\left(\frac{100}{90}\right)^4$$

= 300 + 31.6 + 60.2 + 609.7

= 1001.5 mm or 1.0015 m

To locate the node point,

$$I_a\, l_a = I_b\, l_b$$

or

$$m_a k_a^2 l_a = m_b k_b^2 l_b$$

or

$$300 \times (0.75)^2\, l_a = 500 \times (0.9)^2\, (1.0015 - l_a)$$

or

$$l_a = 0.707 \text{ m}$$

$$f_n = \frac{1}{2\pi}\sqrt{\frac{GJ}{I_a l_a}}$$

$$= \frac{1}{2\pi}\sqrt{\frac{84\times10^9 \times \frac{\pi}{32}(0.1)^4}{300\times(0.75)^2\times0.707}} = \underline{13.2 \text{ Hz}}$$

(b) If the node point is to be at the mid-section of the shaft with a 120-mm diameter

$$l_a = 300 + 31.6 + \frac{60.2}{2} = 361.7 \text{ mm}$$

or 0.3617 m

$$m_a k_a^2 l_a = m_b k_b^2 l_b$$

$$300 \times (0.75)^2 \times 0.3617 = 500\,(0.9)^2 \times l_b$$

or

$$l_b = 0.1507 \text{ m}$$

Let d be the new diameter of the last section of the shaft.

Then

$$l_b = \frac{1}{2}\times\left[125\left(\frac{100}{120}\right)^4\right] + 400\left(\frac{100}{d}\right)^4$$

or

$$150.7 = \frac{60.2}{2} + 400\left(\frac{100}{d}\right)^4$$

$d = \underline{135 \text{ mm}}$

Example 18.26 *A torsional system is shown in Fig. 18.44(a). Find the frequencies of torsional vibrations and the positions of the nodes. Also, find the amplitudes of vibrations. G = 84×10^9 N/m²*

Solution Let the engine, propeller and the flywheel be represented by the rotors A, B and C respectively. Reducing the system to torsionally equivalent shaft of 40 mm diameter,

$$l_1 = 2\left(\frac{40}{45}\right)^4 = 1.247 \text{ m}$$

$$I_a\, l_a = I_b\, l_b$$

$$30 l_a = 50 l_b \qquad \text{or} \qquad l_b = 0.6 l_a$$

Also,

$$\frac{1}{I_a l_a} = \frac{1}{I_c}\left(\frac{1}{l_1 - l_a} + \frac{1}{l_2 - l_a}\right)$$

$$\frac{1}{30 l_a} = \frac{1}{90}\left(\frac{1}{1.247 - l_a} + \frac{1}{4 - 0.6 l_a}\right)$$

On solving,

l_a = 4.821 m and 0.913 m

l_b = 2.893 m and 0.548 m

For two-node frequency [Fig.18.44(c)],

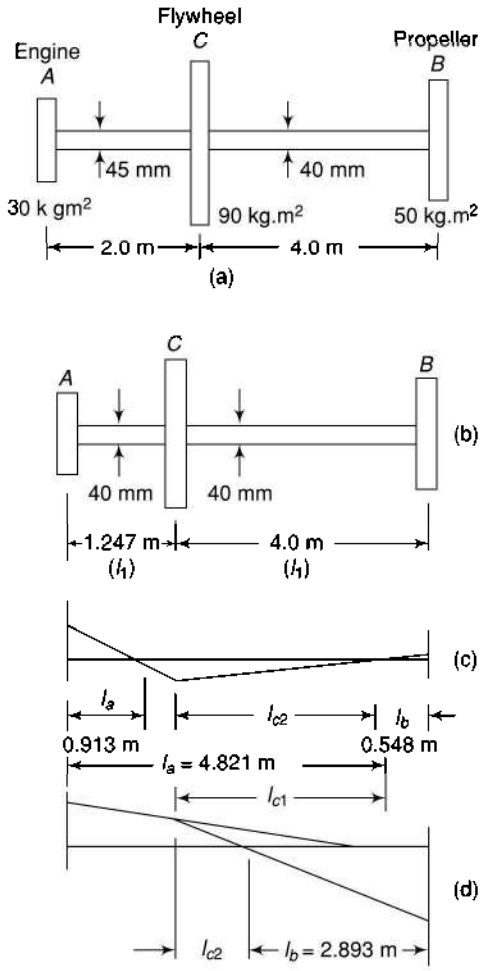

Fig. 18.44

$l_a = 0.913$ m and $l_b = 0.548$ m

However,

$$\text{actual, } l_a = 0.913 \times \left(\frac{40}{45}\right)^4 = 1.462 \text{ m}$$

$$f_n = \frac{1}{2\pi}\sqrt{\frac{GJ}{I_a l_a}}$$

$$= \frac{1}{2\pi}\sqrt{\frac{84\times10^9 \times \frac{\pi}{32}(0.04)^4}{30\times0.913}} = \underline{4.41 \text{ Hz}}$$

Amplitudes

$$\frac{A_c}{A_a} = \frac{l_{c1}}{l_a} \quad \text{or} \quad A_c = 1\times\frac{1.247-0.913}{0.913} = \underline{0.366 \text{ rad}}$$

(assuming $A_a = 1$ rad.)

$$\frac{A_b}{A_c} = \frac{l_b}{l_{c2}} \quad \text{or} \quad A_b = 0.366\times\frac{0.548}{4.0-0.548} = \underline{0.058 \text{ rad}}$$

For single-node vibration or for fundamental frequency [Fig.18.44 (d)]

$l_a = 4.821$ m and $l_b = 2.893$ m

$$f_n = \frac{1}{2\pi}\sqrt{\frac{84\times10^9\times\frac{\pi}{32}(0.04)^4}{30\times0.821}} = \underline{1.92 \text{ Hz}}$$

The node occurs at a distance of 2.893 m from B.

$$A_c = 1\times\frac{4.821-1.247}{4.821} = \underline{0.741 \text{ rad}}$$

$$A_b = 0.741\times\frac{2.893}{4-2.893} = \underline{1.937 \text{ rad}}$$

Example 18.27 *The following data refer to the transmission gear of a motor ship [Fig. 18.45(a)]:*

Moment of inertia of flywheel = *4800 kg.m²*
Moment of inertia of propeller = *3200 kg.m²*
Modulus of rigidity of shaft material = *80 × 10⁹ N/m²*
Equivalent MOI per cylinder = *400 kg.m²*

Assuming the diameter of the torsionally equivalent crankshaft to be 320 mm and treating the arrangement as a three-rotor system, determine the frequency of free torsional vibrations.

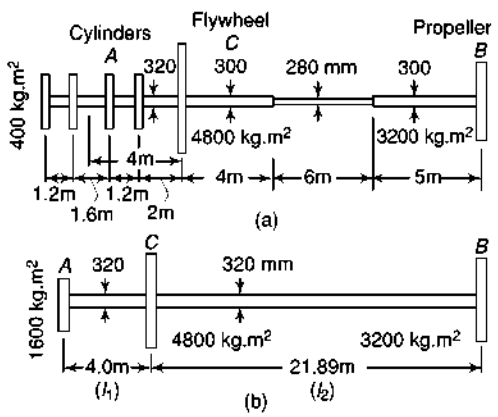

Fig. 18.45

Solution Replace the four cylinders by a single rotor at the centre of their combined mass [Fig. 18.45(b)].

The length of the torsionally equivalent shaft between the flywheel and the propeller,

$$l_2 = 4\left(\frac{320}{300}\right)^4 + 6\left(\frac{320}{280}\right)^4 + 5\left(\frac{320}{300}\right)^4$$

$= 5.178 + 10.236 + 6.473$

$= 21.89$ m

$I_a\, l_a = I_b\, l_b$

$(400 \times 4)\, l_a = 3200\, l_b$

$l_a = 2l_b$

$$\frac{1}{I_b l_b} = \frac{1}{l_c}\left(\frac{1}{l_1 - l_a} + \frac{1}{l_2 - l_b}\right)$$

$$\frac{1}{3200 l_b} = \frac{1}{4800}\left(\frac{1}{4 - 2l_b} + \frac{1}{21.89 - l_b}\right)$$

On solving,

$l_b = 14.76$ m and 1.48 m

$l_a = 29.52$ m and 2.96 m

$$f_{n1} = \frac{1}{2\pi}\sqrt{\frac{GJ}{I_b l_b}}$$

$$= \frac{1}{2\pi}\sqrt{\frac{84 \times 10^9 \times \frac{\pi}{32}(0.32)^4}{3200 \times 14.76}} = \underline{6.65 \text{ Hz}}$$

(Single-node)

$$f_{n2} = 6.65 \times \sqrt{\frac{14.76}{1.48}} = \underline{21 \text{ Hz}}$$ (two-node)

18.26 FREE TORSIONAL VIBRATIONS OF GEARED SYSTEM

Figure 18.46(a) shows a geared system. Shaft 1 carries a rotor A on one end and a pinion on the other (at C). Shaft 2 carries a gear meshing with the pinion at one end and a rotor B on the other. The system may be replaced by an equivalent shaft system. Assume that

- the inertia of the gears (at C) and shafts is negligible
- the load is within elastic limits of gear teeth, i.e., they are rigid
- no backlash or slip occurs in the gear drive

With these assumptions, the system reduces to a two-rotor system as shown in Fig. 18.46(b).

The system b will be equivalent to the system a if

(i) the kinetic energy of system b is equal to that of a, and

(ii) the strain energy of system b is equal to that of a.

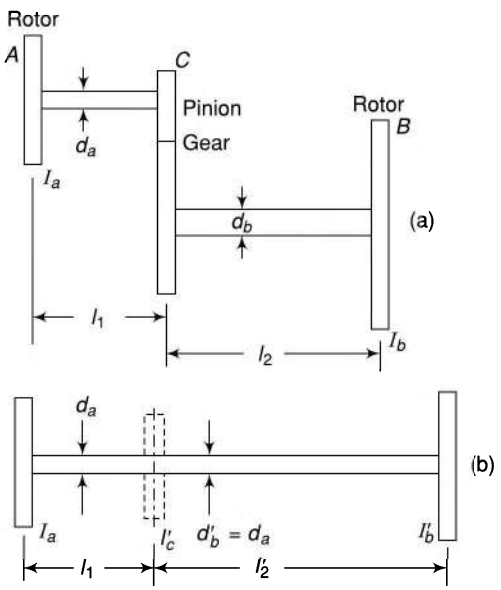

Fig. 18.46

Equating the kinetic energies

KE of original system = KE of section l_1 + KE of section l_2

KE of equivalent system = KE of section l_1 + KE of section l_2'

KE of section l_2' = KE of section l_2

$$\frac{1}{2} I'_b\, \omega_b'^2 = \frac{1}{2} I_b \omega_b^2$$

$$\frac{1}{2} I'_b\, \omega_a^2 = \frac{1}{2} I_b \omega_b^2 \qquad (\omega'_b = \omega_a)$$

or

$$I_b' = I_b\left(\frac{\omega_b}{\omega_a}\right)^2 = \frac{I_b}{G_r^2} \qquad G_r = \frac{\omega_a}{\omega_b}$$

Equating the strain energies

SE of section l'_2 = *SE* of section l_2

$$\frac{1}{2}T_b'\theta_b' = \frac{1}{2}T_b\theta_b$$

$$\frac{J_b'G}{l_2'}\theta_b'\theta_b' = \frac{J_bG}{l_2}\theta_b\theta_b \qquad \theta = \frac{Tl}{JG}$$

$$l_2' = \left(\frac{\theta_b'}{\theta_b}\right)^2 l_2\left(\frac{J_b'}{J_b}\right)$$

$$= \left(\frac{\omega_b'}{\omega_b}\right)^2 l_2\left(\frac{d_b'}{d_b}\right)^4 \qquad (\theta = \omega t)$$

$$= \left(\frac{\omega_a}{\omega_b}\right)^2 l_2\left(\frac{d_b'}{d_b}\right)^4 \qquad (\omega'_b = \omega_a)$$

$$= G_r^2 l_2\left(\frac{d_b'}{d_b}\right)^4 \qquad (18.65)$$

Assuming the diameter of the equivalent shaft of to be equal to that of shaft 1,

$$l_2' = G_r^2 l_2\left(\frac{d_a}{d_b}\right)^4$$

Length of equivalent shaft

$$= l_1 + G_r^2 l_2\left(\frac{d_a}{d_b}\right)^4 \qquad (18.66)$$

In case the inertia of the gearing is not negligible, an additional rotor has to be considered at a distance l_1 from the rotor *A*. The mass moment of inertia of the rotor is given by

$$I_c' = I_{ca} + \frac{I_{cb}}{G_r^2} \qquad (18.67)$$

where

I_{ca} = *MOI* of gear

I_{cb} = *MOI* of pinion

In this way, the system will act as a three-rotor system.

Example 18.28 *A reciprocating IC engine is coupled to a centrifugal pump through a pair of gears. The shaft from the flywheel of the engine to the gear wheel has a 48-mm diameter and is 800 mm long. The shaft from the pinion to the pump has 32-mm diameter and is 280 mm long. The pump speed is four times the engine speed. Moments of inertia of the flywheel, gear-wheel, pinion and pump impeller are 1000 kg.m², 14 kg.m², 5 kg.m² and 18 kg.m² respectively. Find the natural frequency of the torsional oscillations of the system. G = 80 GN/m².*

Solution Let rotors A and B in Fig. 18.46 represent the engine flywheel and the centrifugal pump respectively. As the pump speed is four times the engine speed (the pinion is supported on the pump shaft and the gear on the engine shaft), therefore,

$$G_r = \frac{1}{4} = 0.25$$

Also,

$d_a = 48$ mm $\quad l_1 = 800$ mm $\quad I_a = 1000$ kg.m²

$d_b = 32$ mm $\quad l_2 = 280$ mm $\quad I_b = 18$ kg.m²

$I_{ca} = 14$ kg.m² $\quad I_{cb} = 5$ kg.m² $\quad G = 80$ GN/m²

$$I_b' = \frac{I_b}{G_r^2} = \frac{18}{(0.25)^2} = 288 \text{ kg.m}^2$$

$$I_c' = I_{ca} + \frac{I_{cb}}{G_r^2} = 14 + \frac{5}{(0.25)^2} = 94 \text{ kg.m}^2$$

Thus the system becomes a three-rotor one.

$$l_2' = (0.25)^2 \times 280 \times \left(\frac{48}{32}\right)^4 = 88.6 \text{ mm}$$

$$= 0.0886 \text{ m}$$

Now,

$$I_a l_a = I'_b l'_b$$

or

$$1000 l_a = 288\, l'_b$$

or

$$l'_b = 3.47 l_a$$

Also

$$\frac{1}{I_a l_a} = \frac{1}{I_c'}\left[\frac{1}{l_1 - l_a} + \frac{1}{l_2' - l_b'}\right]$$

$$\frac{1}{1000 l_a} = \frac{1}{94}\left[\frac{1}{0.8 - l_a} + \frac{1}{0.0886 - 3.47 l_a}\right]$$

$$l_a = 0.2354 \text{ m} \quad \text{or} \quad 0.0059 \text{ m}$$

Single-node frequency,

$$f_{n1} = \frac{1}{2\pi}\sqrt{\frac{GJ}{I_a l_a}}$$

$$= \frac{1}{2\pi}\sqrt{\frac{80 \times 10^9 \times \frac{\pi}{32}(0.048)^4}{1000 \times 0.2354}} = \underline{2.12 \text{ Hz}}$$

$$f_{n2} = 2.12 \times \sqrt{\frac{0.2354}{0.0059}} = \underline{13.4 \text{ Hz}}$$

Summary

1. A body is said to vibrate if it has a to-and-fro motion. These are caused due to elastic forces.
2. Elastic vibrations in which there are no friction and external forces after the initial release of the body are known as *free* or *natural* vibrations.
3. When the energy of a vibrating system is gradually dissipated by friction and other resistances, the vibrations are said to be *damped*.
4. When a repeated force continuously acts on a system, the vibrations are said to be *forced*. The frequency of the vibrations is that of the applied force and is independent of their own natural frequency of vibrations.
5. The number of cycles of motion completed in one second is known as *frequency*. It is expressed in hertz (Hz) and is equal to one cycle per second.
6. When the frequency of the external force is the same as that of the natural frequency of the system, a state of *resonance* is said to have been reached. Resonance results in large amplitudes of vibrations which may be dangerous.
7. If a shaft is elongated and shortened so that the

same moves up and down resulting in tensile and compressive stresses in the shaft, the vibrations are said to be *longitudinal.*

8. When the shaft is bent alternately and tensile and compressive stresses due to bending result, the vibrations are said to be *transverse.*
9. When the shaft is twisted and untwisted alternately and torsional shear stresses are induced, the vibrations are known as *torsional* vibrations.
10. For a system to vibrate, it must possess inertial and restoring elements whereas it may possess some damping element responsible for dissipating the energy.
11. The number of independent coordinates required to describe a vibratory system is known as its degree of freedom.
12. The velocity vector leads the displacement vector by $\pi/2$ and the acceleration vector leads the displacement vector by π in case of free vibrations.
13. The inertia effect of the spring is equal to that of a mass, one third of the mass of the spring, concentrated at its free end.
14. Damping coefficient is defined as the damping force per unit velocity.
15. Damping factor ζ is the ratio of the existing damping in a system to that required for critical damping, i.e., $\zeta = c/c_c$.
16. The frequency of an undamped system ($\zeta = 0$) depends upon the static deflection under the weight of its mass ($\omega_n = \sqrt{g/\Delta}$.
17. The frequency of an underdamped system ($\zeta < 1$) decreases to $\omega_d (= \sqrt{1-\zeta^2}\,\omega_n)$ and the time period increases to $T_d = 2\pi/\omega_d$. The amplitudes of the vibrations decrease with time, the ratio of successive amplitudes being constant. The vibrations die out with time.
18. At critical damping $\zeta = 1$, $\omega_d = 0$ and $T_d = \infty$. The system does not vibrate and the mass moves back slowly to the equilibrium position in the shortest possible time without oscillation.
19. For an overdamped system, $\zeta > 1$, the system behaves in the same manner as for critical damping but takes longer to move back to the equilibrium position.
20. The ratio of the amplitude of the steady-state response to the static deflection under the action of force F_o is known as *magnification factor* which depends upon the ratio of frequencies, ω/ω_n, and the damping factor.
21. Transmissibility is defined as the ratio of the force transmitted to the foundation to the force applied.
22. *Critical* or *whirling* or *whipping speed* is the speed at which a rotating shaft tends to vibrate violently in the transverse direction.
23. Multifilar systems are used to determine the moment of inertia of irregular bodies such as unsymmetrical castings, spoked flywheels, connecting rods, etc., for which it is quite difficult to find their moment of inertia from their dimensions.
24. If a shaft held in bearings carries a rotor at each end, it can vibrate torsionally such that the two rotors move in the opposite directions.
25. A torsionally equivalent shaft is one which has the same torsional stiffness as that of the stepped shaft so that it twists to the same extent under a given torque as the stepped shaft would.

Exercises

1. What is meant by vibrations? How are they caused?
2. What are free, damped and forced vibrations? Explain.
3. What types of vibrations can be executed by a massless shaft, one end of which is fixed and the other end carries a heavy disc?
4. Distinguish between longitudinal, transverse and torsional vibrations.
5. What are the basic elements of a vibratory system? What is the degree of freedom?
6. Find the natural frequency of a vibratory system having a mass suspended from the free end of a massless spring. What is the effect of the inertia of the spring mass?
7. Discuss the effect of damping on vibratory systems. What is meant by under-damping, overdamping and critical damping?
8. Define the terms: damping coefficient, critical damping coefficient and damping factor.
9. Derive a relation for the displacement of mass from the equilibrium position of a damped vibratory system from first principles.
10. Show that the ratio of two successive amplitudes of oscillations is constant in a damped vibratory system.

11. What is logarithmic decrement? Derive the relation for the same.
12. What do you mean by the steady-state response of the system in case of forced vibrations?
13. Derive from first principles, a relation for the displacement of mass from the equilibrium position of a damped vibratory system with harmonic forcing.
14. Find graphically the amplitude of the vibrating mass under the action of a simple harmonic force.
15. What is meant by magnification factor in case of forced vibrations? On what factors does it depend?
16. Define the terms *vibration isolation* and *transmissibility*. Explain with the help of transmissibility vs. frequency ratio curves at various damping ratios.
17. Find the steady-state amplitude as a function of damping factor and frequency ratio as a result of forcing due to unbalance in machinery. Explain with the help of plots.
18. Discuss the forcing due to support motion.
19. How is the natural frequency of a shaft of negligible mass carrying a concentrated mass found?
20. Find the natural frequency of a uniformly loaded simply supported shaft making transverse vibrations due to elastic forces.
21. Describe Dunkerley's method to find the natural frequency of a shaft carrying several loads.
22. What do you mean by whirling of shafts? What is whirling or critical speed? Explain.
23. Find the relation for natural frequency of a torsional vibratory system consisting of a single rotor. What is the inertia effect of the mass of the shaft?
24. What are multifilar systems? Where are they used?
25. How is radius of gyration found by finding the natural frequency of vibration of the body using a bifilar system?
26. Describe a trifilar system to find the radius of gyration of a body.
27. Find the ratio of amplitudes of rotors of torsional vibrations of a two-rotor system.
28. Describe a three-rotor vibratory system and find the ratio of their amplitudes.
29. Discuss free torsional vibrations of geared system.
30. The string shown in Fig. 18.47 is under tension T. Determine the natural frequency of vibration in a plane perpendicular to the string assuming that for small displacements, T remains constant. Also, prove that the period of vibration is maximum when $a = l/2$.

$$\left(f_n = \frac{1}{2\pi}\sqrt{\frac{Tl}{m(l-a)a}} \right)$$

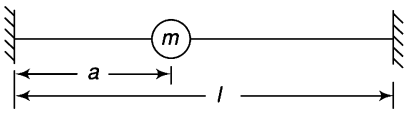

Fig. 18.47

31. In a spring-mass vibrating system, the natural frequency of vibration is reduced to half the value when a second spring is added to the first spring in series. Determine the stiffness of the second spring in terms of that of the first spring. ($s_2 = s_1/3$)
32. In a spring-mass vibrating system, the natural frequency of vibration is 3.56 Hz. When the amount of the suspended mass is increased by 5 kg, the natural frequency is lowered to 2.9 Hz. Determine the original unknown mass and the spring constant. (10 kg; 5 N/mm)
33. A vibrating system consists of a mass of 20 kg, a spring of stiffness 20 kN/m and a damper. The damping provided is only 30% of the critical value. Determine the natural frequency of the damped vibration and the ratio of two consecutive amplitudes. (30.2 rad/s; 7.21)
34. The following data relate to a damped vibrating system:
    m = 140 kg, s = 50 N/mm and ζ = 0.25
    Determine the time in which the mass would settle down to 1/80th of its initial deflection. Also, what will be the number of oscillations complete to reach this value? (0.927 s; 2.7)
35. In a single-degree damped vibrating system, the suspended mass of 4 kg makes 24 oscillations in 20 seconds. The amplitude decreases to 0.3 of the initial value after 4 oscillations. Find the stiffness of the spring, the logarithmic decrement, the damping factor and damping coefficient. (227 N/m; 0.3; 0.0478; 2.88 N/m/s)
36. A gun barrel weighs 300 kg and has a recoil spring of stiffness 250 N/mm. The barrel recoils 0.8 m on firing. Determine the
    (i) critical recoil velocity of the gun
    (ii) critical damping coefficient of the dashpot engaged at the end of the recoil stroke
    (23.1 m/s; 17.322 N/mm/s)
37. A spring mass system is excited by a force $F \sin\omega t$. On measuring, the amplitude of vibration is found to be 12 mm at resonance. However, at a frequency

0.8 times the resonant frequency, the amplitude reduces to 8 mm. Determine the damping ratio of the system. (0.142)

38. An aircraft radio transmitter weighs 26 kg and is mounted on five springs which deflect 8 mm when the transmitter is placed upon them. Neglecting damping, find the percentage of engine vibration received by the transmitter for engine speeds of 1500 rpm and 2500 rpm. (5.22%; 1.82%)
39. A machine weighing 3.5 kg vibrates in a viscous medium. A harmonic exciting force of 40 N acts on the machine and produces resonant amplitude of 18 mm with a period of 0.2 second. Determine the damping coefficient. (70.77 N/m/s)
40. The following data relate to a machine supported on four springs:
Mass of machine = 120 kg, stroke = 90 mm, mass of reciprocating parts = 2.5 kg and speed = 750 rpm.
Springs are symmetrically placed with respect to the centre of mass of the machine. Neglecting damping, find the combined stiffness of the springs so that the force transmitted to the foundation is 1/22 of the impressed force.
If under actual working conditions, the damping reduces the amplitude of the successive vibrations by 25%, determine the forces transmitted to the foundation at 750 rpm and at resonance. Also, find the amplitude of the vibrations at resonance.
(32.18 N/mm; 34.42 N; 332.87 N; 10.34 mm)
41. A 22-mm wide and 45-mm deep steel bar is freely supported at two points that are 800 mm apart and carries a load of 180 kg midway between them. Determine the natural frequency of the transverse vibration, neglecting the weight of the bar. Also find the frequency of vibration if an additional load of 180 kg is distributed uniformly along the length of the shaft. Take E = 250 GN/m^2.
(23.5 Hz; 19.2 Hz)
42. A 1.8-m long hollow shaft is supported in flexible bearings at the ends. It carries two wheels each of 60-kg mass, one at the centre of the shaft and the other at 450 mm from the centre. The external and internal diameters of the shaft are 80 mm and 50 mm respectively. Determine the lowest whirling speed of the shaft. The density of the shaft material is 7500 kg/m^3 and the modulus of elasticity is 210 GN/m^2. (1534 rpm)
43. An equilateral triangular plate of 800 mm side is suspended by three strings. Each string is 2 m long and is connected at each corner of the plate. Find the frequency of oscillation and the time period.
(0.704 Hz; 1.42s)
44. The following particulars relate to a three-cylinder oil engine coupled to a generator (Fig. 18.48):

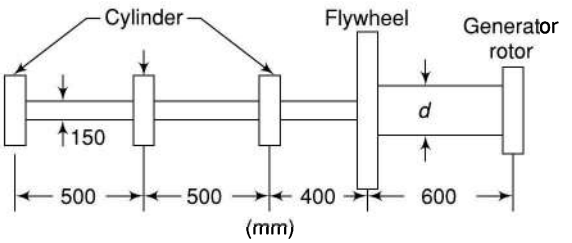

Fig. 18.48

Moment of inertia of engine flywheel	= 600 kg.m^2
Moment of inertia of generator rotor	= 120 kg.m^2
Equivalent moment of inertia for each cylinder	= 25 kg.m^2
Equivalent diameter of the crankshaft	= 150 mm
Two-node frequency of torsional vibration	= 50 Hz

Treating the arrangement as a three-rotor system and the modulus of rigidity for shaft material as 84 kN/mm^2, determine the shaft diameter d.
(162 mm)

45. A 1.2-m long shaft has a diameter of 45 mm for half the length and 60 mm for the remaining length. One end of the shaft is fixed and the other carries a rotor of 200-kg mass with a radius of gyration of 45 mm. Find the frequency of free torsional vibration neglecting the inertia of the shaft. Take G = 84 GN/m^2. (3.88 Hz)
46. Referring to Fig. 18.42, the moments of inertia of the left and right side rotors are 75 kg.m^2 and 50 kg.m^2 respectively. The lengths l_1, l_2, l_3 and l_4 are 300 mm, 400 mm, 100 mm and 260 mm and the diameters d_1, d_2, d_3 and d_4 are 150 mm, 100 mm, 190 mm and 130 mm respectively. Determine the frequency of natural torsional oscillation of the system. G = 85 GN/m^2. (35.5 Hz)
47. A centrifugal pump rotating at 400 rpm is driven by an electric motor at 1200 rpm through a single stage reduction gearing. The moments of inertia of the pump impeller and the motor are 1500 kg.m^2 and 450 kg.m^2 respectively. The lengths of the pump shaft and the motor shaft are 500 and 200 mm, and their diameters are 100 and 50 mm respectively. Neglecting the inertia of the gears, find the frequency of torsional oscillations of the system. G = 85 GN/m^2. (4.74 Hz)

19 AUTOMATIC CONTROL

Introduction

Physical systems or mechanisms are required to be adjusted or controlled so that they perform their specific duties. This is done either manually or automatically. Automatic control is desired in order to save the human operator from drudgery. It is also more efficient.

Self-actuated or automatic control of mechanisms is not a new thing. A centrifugally actuated ball governor which controls the throttle valve to maintain a constant speed of an engine is an example of an automatically controlled mechanism. In process industries where production is the outcome of continuous flow through consecutive treatments, automatic control ensures the uniformity and quality of products and reduces the time of machine watching, and thus the wage bills. Examples are paper, chemical or foodstuff industries.

In control systems, the result of the act of adjustment, i.e., closing a valve, moving a lever, pressing a button, etc., is known as *command* and the subsequent result or behaviour of the system as *response*. Automatic control of variables such as length, temperature, radius etc., that occur in industrial flow production is known as *process control.*

19.1 OPEN AND CLOSED-LOOP CONTROL (UNMONITORED AND MONITORED CONTROL)

Control in which the input command is not influenced by the behaviour of the system response (output) is called an *open-loop* or *unmonitored control.* Examples are

(i) Traffic control on the roads by lights where the timing mechanism is preset irrespective of traffic
(ii) Switching off the street lights of a town at a predetermined time by a time-switch irrespective of the fact that the sun rises at a different time each day
(iii) Switching off an electric heater by a time-switch irrespective of whether the dish has been prepared or not

A *closed-loop control system* is one in which the actual value of a controlled quantity is measured and compared continuously with the desired value. The quantity measured may be load or input. In the traffic control system mentioned above, if the flow of traffic is measured either by direct human observation or by counting impulses due to the vehicles passing over a pressure pad, and then changing the time setting accordingly, it becomes a closed-loop control.

Another example of closed-loop control can be that of a water heater. The desired temperature may be maintained by an operator with the help of a thermometer and an electric rod fitted with an on/off switch. He will observe the thermometer continuously and will switch on the heater whenever the temperature of water rises above the desired temperature and switch it off when it falls below the same. Instead of the operator, a thermostat can also serve the purpose of switching on/off the heater thus making the system fully automatic.

A differential device used to measure the actual controlled quantity and to compare it continuously with the desired value is known as an *error detector* or *deviation sensor.*

Measuring the output for comparison with the input is known as *feedback.*

19.2 AMPLIFICATION

Usually, an error detector itself does not have sufficient power output to actuate the correcting mechanism directly. The error signal has to be amplified by using a gear-box, lever system or a hydraulic/pneumatic relay.

19.3 ACTUATOR (SERVOMOTOR)

An *actuator* is an external source of power connected to the input of the controlled machine and serves to reduce the error. Thus it is a device which produces a limited angular or linear motion and may be mechanical, hydraulic or electric. A *servomotor* is usually hydraulic or electric and has a continuous output.

19.4 TRANSDUCER

A *transducer* is a converting device that converts the measurement of the quantity to be controlled into different units, e.g., angular velocity into potential difference, pressure change into angular rotation as in a bourdon tube, temperature change into *emf* as in a thermocouple, linear strain into resistance change as in strain gauge, and so on. It is also usual to convert the error signal into an electric quantity due to the relative ease with which minute electric signals can be detected, transmitted, amplified and manipulated by using solid state electronic means. However, when reliability under adverse operating conditions (high temperature, radiation, dusty atmosphere, corrosiveness, etc.) is desired, pneumatic means should be preferred.

19.5 BLOCK DIAGRAMS

A *block diagram* is a symbolic outline of a system in which various components or operations are represented by rectangles in an ordered sequence. The rectangles are connected by arrows showing the flow of the working medium or of information.

Figure 19.1 shows the block diagram of an ordinary carburettor, and Fig. 19.2 a rocket launching system and its block diagram. Figure 19.3 shows the controlling system of a turbine and its block diagram.

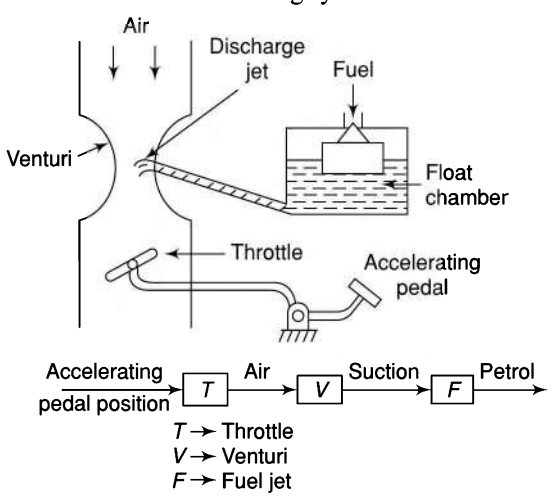

Fig. 19.1

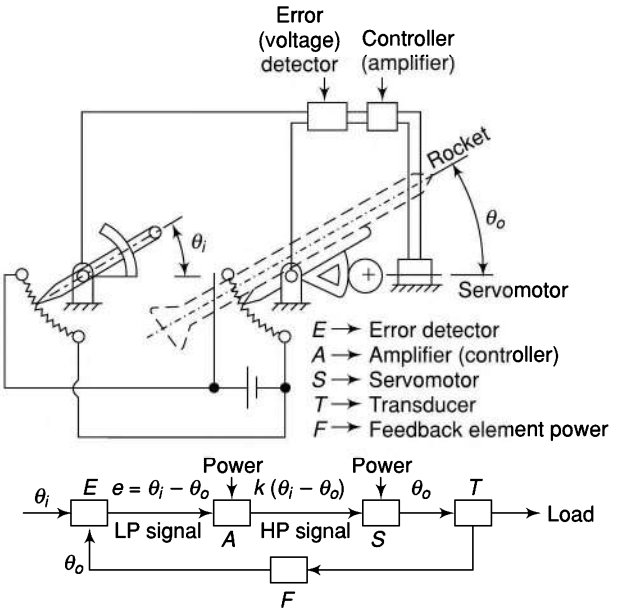

Fig. 19.2

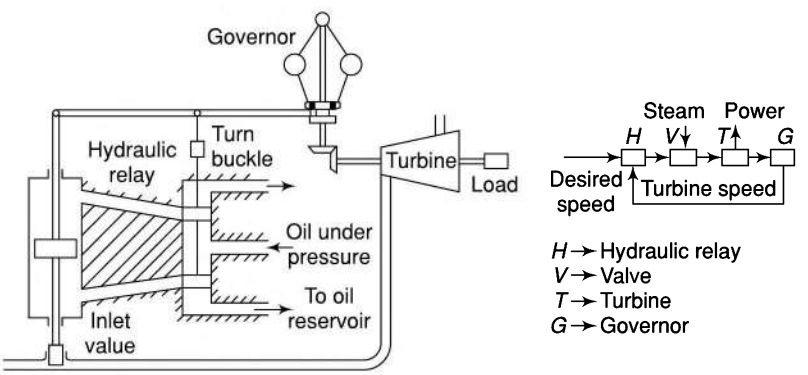

Fig. 19.3

19.6 LAG IN RESPONSE

In any system, usually, there is a *lag* or *delay in response* (output) due to some inherent cause and it becomes difficult to measure the input and output simultaneously. In a shaft transmitting torque, there is an angular lag of one end of the shaft behind the other. Inertia delays a motor attaining its required velocity after the application of a torque. In a steam turbine, if the load is suddenly reduced, there will be some lag in the closing of the steam valve by the hydraulic relay as the first movement of the piston valve will not be sufficient to open the ports. This lag increases the probability of unstable operation.

19.7 DAMPING

When a torque is applied in a system in a direction opposite to its motion, it is known as *damping*. In case of coulomb damping, the opposition is constant and thus there will be a constant difference (error) between the input and the output under steady conditions. In the viscous damping provided by a dashpot, the opposition is proportional to the relative velocity. As the relative velocity is zero in the steady state, the damping is also zero.

19.8 FIRST-ORDER SYSTEM RESPONSE

The first-order system may be linear or torsional.

Linear System

Figure 19.4 shows a system consisting of a massless spring of stiffness s. A constant input is represented by x whereas y represents the output of the system. First, the input signal x is compared with the output signal y. Then the difference $e = x - y$ is passed on to the motor which produces an output torque T proportional to e (or $= se$). The system also has a viscous resistance with damping coefficient c indicating damping force per unit velocity.

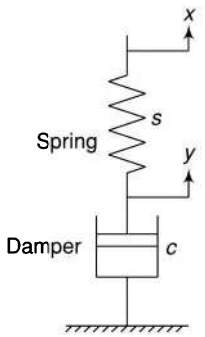

Fig. 19.4

The equation of motion is

$$c\dot{y} = se = s\,(x - y) = sx - sy$$

or

$$c\dot{y} + sy = sx \tag{19.1}$$

or

$$\dot{y} + \frac{s}{c}y = \frac{s}{c}x$$

This is a first-order differential equation. Its solution is given by complimentary function and particular integral.

Complimentary function is the solution of the equation

$$\dot{y} + \frac{s}{c}y = 0$$

and the solution is

$$y = C_1 e^{-\frac{s}{c}t}$$

where C_1 is a constant.

Particular integral can be found by using D operator, i.e.,

$$PI = \frac{(s/c)x}{D + (s/c)} = \frac{(s/c)x}{0 + (s/c)} = x$$

Therefore, the complete solution is

$$y = x + C_1 e^{-\frac{s}{c}t} \tag{19.2}$$

When $t = 0$, $y = 0$

$\therefore$

$$0 = x + C_1 \quad \text{or} \quad C_1 = -x$$

and thus

$$y = x - xe^{-\frac{s}{c}t} = x\left(1 - e^{-\frac{s}{c}t}\right) = x\left(1 - e^{-\frac{t}{T}}\right) \tag{19.3}$$

where $T = c/s$ is known as the *time constant* of the system.

Also,

$$\frac{y}{x} = 1 - e^{-\frac{t}{T}} \tag{19.4}$$

Figure 19.5 shows the graphical representation of y/x vs. t/T. As t increases y tends to reach x. When $t/T = 1$, $y/x = 1 - 0.368 = 0.632$.

$e^{-t/T}$ is known as the dynamic error which reduces with increase in t and vanishes when t is infinity. However, for practical purposes, one need not wait till t reaches infinity. Instead, an accepted value of error is specified and the *settling time* is obtained when the steady state response enters in a band around the final steady state value. The usual value of band is taken between 2 to 5 per cent.

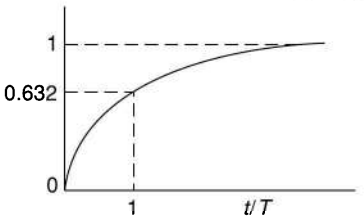

Fig. 19.5

Torsional System

Figure 19.6 shows a system consisting of a massless torsional spring of stiffness q. First the input signal θ_i is compared with the output signal θ_o. Then the difference $e = \theta_i - \theta_o$ is passed on to the motor which produces an output torque T proportional to e (or $= qe$). The system has a viscous resistance with damping coefficient c.

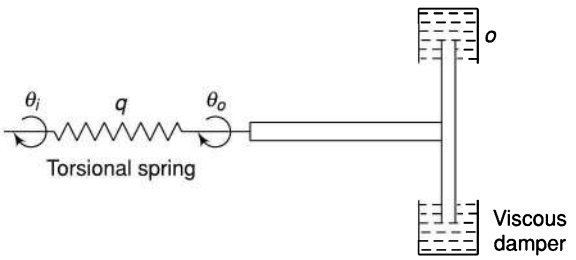

Fig. 19.6

The equation of motion is

$$c\dot{\theta}_o = qe = q\theta_i - q\theta_o \tag{19.5}$$

or

$$c\dot{\theta}_o + q\theta_o = q\theta_i \tag{19.6}$$

or

$$\dot{\theta}_o + \frac{q}{c}\theta_i = \frac{q}{c}\theta_i$$

It is a first-order differential equation. Its solution is given by complimentary function and particular integral.

The complimentary function is the solution of the equation

$$\dot{\theta}_o + \frac{q}{c}\theta_i = 0 \text{ and is } \theta_o = C_1 e^{-\frac{q}{c}t}$$

Particular integral can be found using the D operator and is given as

$$PI = \theta_i$$

Therefore, the complete solution is $\theta_o = \theta_i + C_1 e^{-\frac{q}{c}t}$

When $t = 0$, $\theta_o = 0$

$\therefore$

$$0 = \theta_i + C_1 \quad \text{or} \quad C_1 = -\theta_i$$

and

$$\theta_o = \theta_i - \theta_i e^{-\frac{q}{c}} = \theta_i\left(1 - e^{-\frac{t}{T}}\right) \tag{19.7}$$

where $T = c/q$ is the *time constant* of the system.

Example 19.1 *The time constant of a thermometer is 8 s. Suddenly it is inserted in a bath of temperature 72°C. Determine the temperature recorded by the thermometer after 5 s.*

Solution

$$y = x\left(1 - e^{-\frac{t}{T}}\right) = 72\left(1 - e^{-\frac{5}{8}}\right) = \underline{33.46°}$$

19.9 SECOND-ORDER SYSTEM RESPONSE

In the system considered in the previous section (Fig. 19.6), if the mass of the spring is also taken into account, it becomes a second-order system. Figure 19.7 shows the block diagram of such a system. First, the input signal θ_i is compared with the output signal θ_0. Then the difference $e = \theta_i - \theta_0$ is passed on to the motor which produces an output torque T proportional to e (or $= qe$). The system has a viscous resistance with damping coefficient c.

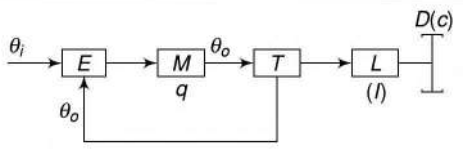

E → Error detector
M → Motor
T → Transducer
L → Load
D → Damper

Fig. 19.7

Let the combined moment of inertia of the motor and load be I.

Then, the equation of motion is

$$I\ddot{\theta}_o + c\dot{\theta}_o = qe$$
$$= q\theta_i - q\theta_0$$

or
$$I\ddot{\theta}_o + c\dot{\theta}_o + q\theta_0 = q\theta_i \tag{19.8}$$

The equation is similar to Eq. (18.25) and can also be written as

$$\ddot{\theta}_0 + \frac{c}{I}\dot{\theta}_0 + \frac{q}{I}\theta_0 = \frac{q}{I}\theta_i$$

or
$$\ddot{\theta}_0 + 2\zeta\omega_n\dot{\theta}_o + \omega_n^2\theta_o = \omega_n^2\theta_i \tag{19.9}$$

where $c = 2\zeta I\omega_n$. The response of the system will depend upon the type of the input, i.e., step displacement, step velocity (ramp displacement) or harmonic. The detailed discussion is beyond the scope of this book.

19.10 TRANSFER FUNCTION

In control systems, the relationship between the input and the output (response) is given by a differential equation of motion. If the differential equation is expressed in symbolic form by substituting D for d/dt or by the Laplace transformation, the transfer function is the operational relationship of the output and the input.

Let a system be expressed by the differential equation in symbolic form as

$$(D^2 + 2\,\zeta\,\omega_n D + \omega^2_n)\,\theta_o = \omega^2_n\,\theta_i$$

Then the transfer function is defined as

$$\frac{\theta_0}{\theta_i} = \frac{\omega_n^2}{\omega_n^2 + 2\zeta\omega_n D + D^2}$$

Example 19.2 *Determine the transfer function of a first-order torsional system.*

Solution The equation of motion is

or $c\dot{\theta}_o + q\theta_0 = q\theta_i$ (Eq. 19.6)

or $\frac{c}{q}\dot{\theta}_o + \theta_0 = \theta_i$

Using D operator which indicates the differentiating with respect to time,

$$\left(\frac{c}{q}\right)D\theta_o + \theta_0 = \theta_i$$

or the transfer function is

$$\frac{\theta_0}{\theta_i} = \frac{1}{1+(c/q)D}$$

$$= \frac{1}{1+TD}$$

where $T = c/q$ is the time period.

Example 19.3 *A scale is fixed to the end of a shaft of torsional stiffness 2 N.m/rad. A viscous damping torque of magnitude 1.6 N.m resists the motion of the pointer on a scale at an angular velocity of 2 rad/s. The shaft to which the pointer is attached gets the motion from the input shaft through a reduction gear box which has a gear ratio of 6:1. If the input shaft is suddenly rotated through one complete rotation, determine the*

(i) time taken by the pointer to reach the position within 1% of the final value

(ii) transfer function

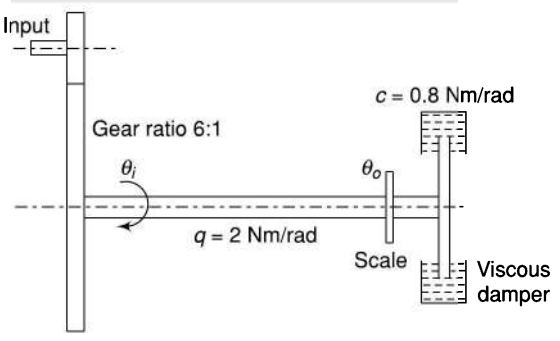

Fig. 19.8

Solution The system is shown in Fig. 19.8.

(i) Response of the torsional system is given by

$$\theta_o = \theta_i\left(1 - e^{-\frac{t}{T}}\right)$$

As the input shaft is rotated through one complete revolution and the shaft with the pointer receives motion through a gear box with ratio 6:1, the rotation of the shaft with the pointer is $\theta_i = 2\pi/6$ rad = $\pi/3$ rad.

Also, c = Damping torque /unit velocity = 1.6/2 = 0.8 N.m/rad/s

q = Torsional stiffness of the shaft = 2 N.m/rad

Time constant, $T = \frac{c}{q} = \frac{0.8}{2} = 0.4$ s.

$$\therefore\ \theta_o = \frac{\pi}{3}\left(1 - e^{-\frac{t}{0.4}}\right) = \frac{\pi}{3}(1 - e^{-2.5t})$$

The curve for the response of the pointer is shown in Fig. 19.9. It is an exponential time delay curve.

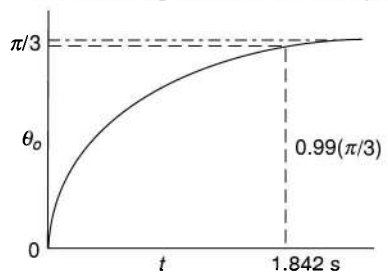

Fig. 19.9

When $\theta_o = (1 - 0.01)\theta_i = 0.99 \times (\pi/3)$

Then, $0.99 \times \frac{\pi}{3} = \frac{\pi}{3}(1 - e^{-2.5t})$

or $e^{-2.5t} = 0.01$

or $e^{2.5t} = 100$

$2.5t = \ln 100 = 4.605$

$t = \underline{1.842 \text{ s}}$

(ii) For torsional systems of the first order,

$c\dot{\theta}_o + q\theta_o = q\theta_i$

Writing using D operator,

$$\frac{c}{q}D\theta_o + \theta_o = \theta_i$$

Time constant, $T = \frac{c}{q} = \frac{0.8}{2} = 0.4$ s

Therefore, $0.4D\theta_o + \theta_o = \theta_i$

or $(0.4D+1)\theta_o = \theta_i$

or $\frac{\theta_o}{\theta_i} = \frac{1}{1+0.4D}$

As the input to the shaft is through a gear box with a reduction gear ratio of 6:1,

Therefore, overall transfer function is

$$\frac{\theta_o}{\theta_i} = \frac{1}{6} \times \frac{1}{(1+0.4D)}$$

Example 19.4 *Find the transfer function of a Hartnell governor as shown in Fig. 16.12. Assume that the load on the sleeve, the weight of the balls and the friction force are negligible as compared to the inertia forces. The viscous damping coefficient of the sleeve is c.*

In the equilibrium position when the arms holding the balls are vertical, the compression of the spring of stiffness s is x_o, the equilibrium speed is ω_o, and the radial distance of the ball centre from the spindle axis is r_o.

Solution When the balls are in the vertical position,

$$mr_o\omega_0^2 a = \frac{1}{2} s\, x_0 b$$

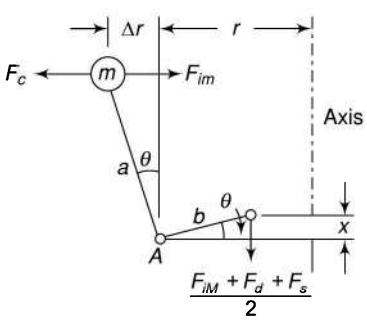

Fig. 19.10

Now, if due to a small change $\Delta\omega$ in speed, the change in radial distance of the ball is Δr and the change in displacement of the sleeve is x, then the forces acting on the bell-crank lever will be (refer Fig. 19.10)

F_c = Centrifugal force due to ball mass

$= m\,(r_o + \Delta r)\,(\omega_o + \Delta\omega)^2$

F_{im} = inertia force of the balls $= m\Delta\ddot{r} = \frac{a}{b}\ddot{x}$

F_{iM} = inertia force of the sleeve mass $= M\ddot{x}$

F_d = Damping force $= c\dot{x}$

F_s = spring force $= s\,(x_o + x)$

Taking moments about the fulcrum A (taking only one half of the governor into consideration).

$$= m(r_o + \Delta r)(\omega_0 + \Delta\omega)^2 a$$

$$= m\frac{a}{b}\ddot{x}a + \frac{1}{2}M\ddot{x}b + \frac{1}{2}c\dot{x}\,b + \frac{1}{2}s(x_0 + x)b$$

$$= m(r_o + \Delta r)[\omega_0^2 + 2\omega_o\Delta\omega + (\Delta\omega)^2]a$$

$$= m\frac{a}{b}\ddot{x}a + \frac{1}{2}M\ddot{x}b + \frac{1}{2}c\dot{x}\,b + \frac{1}{2}s(x_0 + x)b$$

Neglecting second order small terms,

$$= mr_o\omega_0^2 a + m\Delta r\omega_0^2 a + 2mr_o\omega_0\Delta\omega\, a$$

$$= m\frac{a^2}{b}\ddot{x} + \frac{1}{2}M\ddot{x}b + \frac{1}{2}c\dot{x}\,b + \frac{1}{2}s(x_0 + x)b$$

But when the balls are in vertical position,

$$mr_o\omega_0^2 a = \frac{1}{2}sx_0 b$$

Also, $\theta = \frac{\Delta r}{a} = \frac{x}{b}$

$$\therefore \quad \left(\frac{ma^2}{b} + \frac{Mb}{2}\right)\ddot{x} + \frac{1}{2}cb\dot{x} + \left(\frac{1}{2}sb - \frac{ma^2}{b}\omega_0^2\right)x = 2mr_o\,\omega_0\,\Delta\omega\, a$$

Multiplying throughout by $2b$ and using operator D,

$(2ma^2 + Mb^2)\,D^2 x + cb^2Dx + (sb^2 - 2ma^2\omega_0^2)\,x = 4m\,a.b.r_o.\omega_o\,\Delta\omega$

or

$$\left(D^2 + \frac{cb^2}{2ma^2 + Mb^2}D + \frac{sb^2 - 2ma^2\omega_0^2}{2ma^2 + Mb^2}\right)x = \frac{4mabr_o\omega_0\Delta\omega}{2ma^2 + Mb^2}$$

or

$$(D^2 + 2\zeta\omega_n D + \omega_n^2)x = \frac{4mabr_o\omega_0\Delta\omega}{2ma^2 + Mb^2}$$

where

$$2\zeta\omega_n = \frac{cb^2}{2ma^2 + Mb^2} \qquad (\zeta = \text{damping factor})$$

and

$$\omega_n = \sqrt{\frac{sb^2 - 2ma^2\omega_0^2}{2ma^2 + Mb^2}}, \text{ i.e., the natural frequency}$$

Transfer function,

$$\frac{\theta_0}{\theta_i} = \frac{\text{Displacement of the sleeve}(x)}{\text{Change in speed}(\Delta\omega)}$$

$$= \frac{4mabr_o\omega_0\,(2ma^2 + Mb^2)}{D^2 + 2\zeta\omega_n D + \omega_n^2}$$

19.11 TRANSFER FUNCTION RELATIONSHIPS

A control system can have several loops and components, each having its characteristic transfer function.

(i) Open-loop Transfer Function

An open-loop or forward-loop control system has several components having individual transfer functions such as $F_1(D)$, $F_2(D)$, $F_3(D)$, etc., as shown in Fig. 19.11.

$$TF = \frac{\theta_0}{\theta_i} = \frac{\theta_0}{\theta_3}\frac{\theta_3}{\theta_2}\frac{\theta_2}{\theta_1}\frac{\theta_1}{\theta_i} = F_4(D)\,F_3(D)\,F_2(D)\,F_1(D) = KG(D)$$

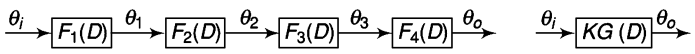

Fig. 19.11

(ii) Closed-loop Transfer Function

A closed-loop or feedback loop is shown in Fig. 19.12.

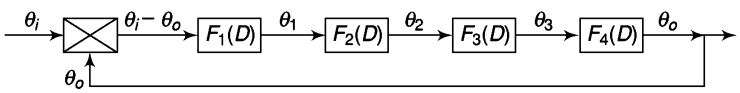

Fig. 19.12

$$\frac{\theta_0}{\theta_i - \theta_0} = KG(D)$$

or $$\theta_0 = KG(D)\theta_i - KG(D)\,\theta_0$$

or $$[1 + KG(D)]\,\theta_0 = KG(D)\theta_i$$

$\therefore$ $$TF = \frac{\theta_0}{\theta_i} = \frac{KG(D)}{1 + KG(D)} = \frac{\text{Open loop TF}}{1 + \text{Open loop TF}}$$

Summary

1. Physical systems or mechanisms are required to be adjusted or controlled either manually or automatically so that they perform their specific duties. Automatic control is desired in order to save the human operator from drudgery. It is also more efficient.
2. In control systems, the result of the act of adjustment is known as *command* and the subsequent result or behaviour of the system as *response*.
3. Control in which the input command is not influenced by the behaviour of the system response is called an *open-loop* or *unmonitored control*.
4. A *closed-loop control system* is one in which the actual value of a controlled quantity is measured and compared continuously with the desired value.
5. A differential device used to measure the actual controlled quantity and to compare it continuously with the desired value is known as an *error detector* or *deviation sensor*.
6. An error detector itself has insufficient power output to actuate the correcting mechanism directly. The error signal has to be *amplified* by using a gear-box, lever system or a hydraulic/pneumatic relay.
7. An *actuator* is an external source of power connected to the input of the controlled machine and serves to reduce the error. A *servomotor* is usually hydraulic or electric and has a continuous output.
8. A *transducer* is a converting device that converts the measurement of the quantity to be controlled into different units
9. A *block diagram* is a symbolic outline of a system in which various components or operations are represented by rectangles in an ordered sequence.
10. In any system, usually, there is a *lag* or *delay in response* (output) due to some inherent cause and it becomes difficult to measure the input and output simultaneously.
11. When a torque is applied in a system in a direction opposite to its motion, it is known as *damping*.
12. Transfer function is the operational relationship of the output and the input in control systems, when the relationship between them is expressed in a symbolic form by substituting *D* for *d/dt* or by the Laplace transformation in the differential equation of motion of the system.

Exercises

1. What do you mean by automatic control of physical systems or mechanisms? What is its importance?
2. What are the open- and closed-loop control systems? Explain by giving examples.
3. Define the terms related to control systems: command, response, actuator, transducer, lag in response and damping.
4. What is a block diagram in control systems? How is it helpful in the analysis of a system?
5. Derive a relation for the response of a first-order torsional system.
6. What is transfer function? Find the transfer function of a Hartnell governor assuming the load on the sleeve, the weight of the balls and the friction force to be negligible as compared to the inertia forces.
7. Define the open-loop and the closed-loop transfer function relationships.

Appendix I

OBJECTIVE-TYPE QUESTIONS

Chapter 1 Mechanisms and Machines

1.1 The lead screw of a lathe with nut is a
(a) rolling pair (b) screw pair (c) turning pair (d) sliding pair

1.2 In a kinematic pair, when the elements have surface contact while in motion, it is a
(a) higher pair (b) closed pair (c) lower pair (d) unclosed pair

1.3 In a kinematic chain, a ternary joint is equivalent to
(a) two binary joints (b) three binary joints (c) one binary joint

1.4 In a four-link mechanism, the sum of the shortest and the longest link is less than the sum of the other two links. It will act as a drag-crank mechanism if
(a) the longest link is fixed
(b) the shortest link is fixed
(c) any link adjacent to the shortest link is fixed

1.5 In a four-link mechanism, the sum of the shortest and the longest link is less than the sum of the other two links. It will act as a crank-rocker mechanism if
(a) the link opposite to the shortest link is fixed
(b) the shortest link is fixed
(c) any link adjacent to the shortest link is fixed

1.6 In a four-link mechanism, the sum of the shortest and the longest link is less than the sum of the other two links. It will act as a rocker-rocker mechanism if
(a) the link opposite to the shortest link is fixed
(b) the shortest link is fixed
(c) any link adjacent to the shortest link is fixed

1.7 The transmission angle is maximum when the crank angle with the fixed link is
(a) 0° (b) 90° (c) 180° (d) 270°

1.8 The transmission angle is minimum when the crank angle with the fixed link is
(a) 0° (b) 90° (c) 180° (d) 270°

1.9 Which of the following is an inversion of single-slider-crank chain?
(a) Elliptical trammel (b) Hand pump
(c) Scotch yoke (d) Oldham's coupling

1.10 Which of the following is an inversion of double-slider-crank chain?
(a) Whitworth quick return mechanism
(b) Reciprocating compressor
(c) Scotch yoke
(d) Rotary engine

1.11 Oldham's coupling is used to connect two shafts which are
(a) intersecting (b) parallel
(c) perpendicular (d) co-axial

Chapter 2 Velocity Analysis

2.1 The linear velocity of a point B on a link rotating at an angular velocity ω relative to another point A on the same link is
(a) $\omega^2 \cdot AB$ (b) $\omega \cdot AB$ (c) $\omega \cdot (AB)^2$ (d) ω/AB

2.2 The linear velocity of a point on a link relative to another point on the same link is _____ to the line joining the points.
(a) perpendicular (b) parallel (c) at 45°

2.3 The total number of instantaneous centres of a mechanism having n links is
(a) $\frac{n(n-1)}{2}$ (b) $\frac{n-1}{2}$ (c) $\frac{n(n+1)}{2}$ (d) $\frac{n+1}{2}$

2.4 According to Kennedy's theorem, the instantaneous centres of three bodies having relative motion lie on a
(a) curved path (b) straight line (c) point

2.5 The instantaneous centre of a slider moving in a linear guide lies
(a) at pin point (b) at their point of contact (c) at infinity

2.6 The instantaneous centre of a slider moving in a curved surface lies
(a) at infinity (b) at their point of contact
(c) at the centre of curvature (d) at the pin point

2.7 The fixed instantaneous centre of a mechanism
(a) varies with the configuration
(b) remains at the same place for all configurations

2.8 The instantaneous centre of rotation of a circular disc rolling on a straight path is
(a) at the centre of the disc
(b) at their point of contact
(c) at the centre of gravity of the disc
(d) at infinity

2.9 The locus of instantaneous centre of a moving body relative to a fixed body is known as the
(a) space centrode (b) body centrode
(c) moving centrode (d) none of the above

2.10 The space centrode of a circular disc rolling on a straight path is
(a) a circle (b) a parabola
(c) a straight line (d) none of the above

Chapter 3 Acceleration Analysis

3.1 The component of the acceleration directed toward the centre of rotation of a revolving body is known as _____ component.
(a) tangential (b) centripetal (c) Coriolis

3.2 At an instant, the link AB of length r has an angular velocity ω and an angular acceleration α. What is the total acceleration of AB?
(a) $[(\omega^2 \cdot r)^2 + (\alpha \cdot r)^2]^{1/2}$ (b) $[(\omega \cdot r)^2 + (\alpha \cdot r)^2]^{1/2}$
(c) $[(\omega^2 \cdot r)^2 + (\alpha^2 \cdot r)^2]^{1/2}$ (d) $[(\omega \cdot r)^2 + (\alpha^2 \cdot r)^2]^{1/2}$

3.3 At an instant, if the angular velocity of a link is clockwise then the angular acceleration will be
(a) clockwise
(b) counter-clockwise
(c) in any direction (clockwise or counter-clockwise)

3.4 Angular acceleration of a link AB is given by

(a) $\dfrac{\text{Centripetal acc.}}{\text{length } AB}$ (b) $\dfrac{\text{Tangential acc.}}{\text{length } AB}$ (c) $\dfrac{\text{Total acc.}}{\text{length } AB}$

3.5 A slider moves with uniform velocity v on a revolving link of length r with angular velocity ω. The Coriolis acceleration component of a point on the slider relative to a coincident point on the link is equal to
(a) $2r\,\omega$ parallel to the link
(b) $2\,\omega\,v$ perpendicular to the link
(c) $2r\,\omega$ perpendicular to the link
(d) $2\,\omega\,v$ parallel to the link

3.6 The Coriolis acceleration component is taken into account for a _____ mechanism.
(a) double-slider crank
(b) four-link mechanism
(c) Scotch yoke
(d) quick-return mechanism

3.7 The Coriolis acceleration component
(a) lags the sliding velocity by 90°
(b) leads the sliding velocity by 90°
(c) lags the sliding velocity by 180°
(d) leads the sliding velocity by 180°

Chapter 4 Computer-aided Analysis of Mechanisms

4.1 Analytical methods to find velocity and acceleration are the most suitable for
(a) manual calculations
(b) desk-calculator
(c) digital computer

4.2 For analytical solution of mechanisms, _____ links are considered as vectors.
(a) moving links (b) fixed links
(c) all (d) input and output

4.3 Coupler curves are the loci of a point on a _____ link.
(a) coupler (b) output (c) input (d) any

4.4 The number of coupler curves which can be drawn in a mechanism can be
(a) infinite
(b) one
(c) equal to number of links
(d) depends upon the motion of links

Chapter 5 Graphical and Computer-aided Synthesis of Mechanisms

5.1 The relative pole of a moving link is its centre of rotation relative to a _____ link.
(a) fixed link (b) moving link (c) any link

5.2 Freudenstein's equation is written in the following form:
(a) $k_1 \cos \varphi + k_2 \cos \theta + k_3 - \cos (\theta - \varphi) = 0$
(b) $k_1 \cos \varphi + k_2 \cos \theta + k_3 + \cos (\varphi - \theta) = 1$
(c) $k_1 \cos \varphi + k_2 \cos \theta + k_3 - \cos (\theta - \varphi) = 1$

5.3 Function generation means designing a mechanism in which _____ are related by a function.
(a) output and input links
(b) input and coupler links
(c) output and coupler links

Chapter 6 Lower Pairs

6.1 A pantograph consists of
(a) 4 links (b) 6 links (c) 8 links (d) 10 links

6.2 A Hart mechanism uses
(a) 4 links (b) 6 links (c) 8 links (d) 10 links

6.3 A Paucellier mechanism has
(a) 4 links (b) 6 links (c) 8 links (d) 10 links

6.4 Which of these mechanisms gives an approximately straight line?
(a) Hart (b) Watt (c) Paucellier (d) Kempe

6.5 Which of these mechanisms has six links?
(a) Tchebicheff (b) Hart (c) Paucellier (d) Watt

6.6 Which of these mechanisms use two identical mechanisms?
(a) Hart (b) Watt (c) Paucellier (d) Kempe

6.7 The Davis steering gear is not used because
(a) it has turning pairs
(b) it is costly
(c) it has sliding pairs
(d) it does not fulfill the condition of correct gearing

6.8 The Davis steering gear fulfills the condition of correct gearing at
(a) two positions (b) three positions
(c) all positions (d) one position

6.9 The Ackermann steering gear fulfills the condition of correct gearing at
(a) no position (b) one position
(c) three positions (d) all positions

6.10 A Hooke's joint is used to join two shafts which are
(a) aligned (b) intersecting (c) parallel

6.11 The maximum velocity of the driven shaft of a Hooke's joint is
(a) $\omega_1 \cos \alpha$ (b) $\omega_1/\cos \alpha$ (c) $\omega_1 \sin \alpha$ (d) $\omega_1/\sin \alpha$

6.12 The maximum velocity of the driven shaft of a Hooke's joint is at θ equal to
(a) 0° and 180° (b) 90° and 270°
(c) 90° and 180° (d) 180° and 270°

Chapter 7 Cams

7.1 The cam follower used in automobile engines is
(a) roller (b) flat-faced
(c) spherical-faced (d) knife-edged

7.2 In a radial cam, the follower moves in a direction
(a) parallel to the cam axis
(b) perpendicular to the cam axis
(c) along the cam axis

7.3 The cam follower used in air-craft engines is a _____ follower.
(a) roller (b) flat-faced
(c) spherical-faced (d) knife-edged

7.4 The reference point on the follower to lay the cam profile is known as the
(a) cam centre (b) pitch point (c) trace point (d) prime point

7.5 The circle drawn to the cam profile with the minimum radius is called the
(a) prime circle (b) cam circle (c) pitch circle (d) base circle

7.6 The size of the cam depends on
(a) pitch circle (b) prime circle (c) base circle (d) pitch curve

7.7 The angle between the axis of the follower and the normal to the pitch curve is known as the
(a) base angle (b) pressure angle
(c) pitch angle (d) prime angle

7.8 The pressure angle of the cam _____ with increase in the base circle diameter.
(a) decreases (b) increases
(c) does not change (d) may decrease or increase

7.9 The point on the cam with the maximum pressure angle is known as the
(a) cam centre (b) pitch point (c) trace point (d) prime point

7.10 The path described by the trace point is known as the
(a) pitch curve (b) pitch circle (c) prime circle (d) prime curve

7.11 The most suitable follower motion programme for a high-speed engine is
(a) uniform acceleration and deceleration
(b) uniform velocity
(c) simple harmonic motion
(d) cycloidal

Chapter 8 Friction

8.1 The efficiency of a screw jack depends on
(a) the pitch of the threads (b) the load
(c) both pitch and load (d) neither pitch nor load

8.2 The efficiency of a screw jack increases with a/an
(a) decrease in the load (b) increase in the load
(c) decrease in the pitch (d) increase in the pitch

8.3 The efficiency of a screw jack is

(a) $\eta = \dfrac{\tan \alpha}{\tan (\alpha - \varphi)}$ (b) $\eta = \dfrac{\tan (\alpha + \varphi)}{\tan \alpha}$

(c) $\eta = \dfrac{\tan \alpha}{\tan (\alpha + \varphi)}$ (d) $\eta = \dfrac{\tan (\alpha - \varphi)}{\tan \alpha}$

8.4 The efficiency of a screw jack is maximum when

(a) $\alpha = 45° - \dfrac{\varphi}{4}$ (b) $\alpha = 45° + \dfrac{\varphi}{2}$

(c) $\alpha = 45° + \dfrac{\varphi}{4}$ (d) $\alpha = 45° - \dfrac{\varphi}{2}$

8.5 The maximum efficiency of a screw jack is given by

(a) $\eta = \dfrac{1 + \sin \varphi}{1 - \sin \varphi}$ (b) $\eta = \dfrac{1 - \sin \varphi}{1 + \sin \varphi}$

(c) $\eta = \dfrac{1 - \sin \varphi}{1 + \cos \varphi}$ (d) $\eta = \dfrac{1 + \sin \varphi}{1 - \cos \varphi}$

8.6 The efficiency of a wedge is

(a) $\eta = \dfrac{\tan \alpha}{\tan (\alpha - 2\varphi)}$ (b) $\eta = \dfrac{\tan (\alpha + 2\varphi)}{\tan \alpha}$

(c) $\eta = \dfrac{\tan \alpha}{\tan (\alpha + 2\varphi)}$ (d) $\eta = \dfrac{\tan (\alpha - 2\varphi)}{\tan \alpha}$

8.7 For flat and conical pivots, the ratio of the friction torque with uniform wear to the friction torque with uniform pressure is

(a) 2/3 (b) 3/2 (c) 4/3 (d) 3/4

8.8 The frictional torque for the same diameter in a conical bearing is _____ than in a flat bearing.

(a) more (b) less

(c) equal (d) may be more or less

8.9 For a safe design, a friction clutch is designed assuming

(a) uniform pressure theory

(b) uniform wear theory

(c) any one of the two

8.10 No force is required for downward motion of a load on a screw jack if

(a) $\alpha < \varphi$ (b) $\alpha > \varphi$ (c) $\alpha > 2\varphi$ (d) $\alpha < 2\varphi$

8.11 In a multiple-friction clutch, the number of active friction surfaces is

(a) $2n$ (b) n (c) $2(n - 1)$ (d) $n - 1$

Chapter 9 Belts, Ropes and Chains

9.1 Which of the following is not a flexible type of connector?

(a) Belt (b) Rope (c) Chain (d) Gear

9.2 In an open or crossed belt drive, the velocity ratio of the two pulleys is

(a) directly proportional to their diameters

(b) directly proportional to the square of their diameters

(c) inversely proportional to their diameters

(d) inversely proportional to the square of their diameters

9.3 Due to slip, the velocity ratio of a belt drive

(a) increases (b) decreases (c) remains same

9.4 The included angle of a pulley for a V-belt is

(a) 50° – 60° (b) 30° – 40° (c) 20° – 30° (d) 40° – 50°

9.5 The crowning of pulleys is done to

(a) increase the tightness of the belt on the pulley

(b) prevent belt running off the pulley

(c) increase the torque transmitted

(d) improve the shape and strength of the pulley

9.6 For maximum power transmission by a belt drive, the maximum tension must be

(a) $2T_c$ (b) $3T_c$ (c) $4T_c$ (d) $5T_c$

9.7 For maximum power transmission, the velocity of the belt is

(a) $\dfrac{T}{\sqrt{m}}$ (b) $\dfrac{T}{\sqrt{2m}}$ (c) $\dfrac{T}{\sqrt{3m}}$ (d) $\dfrac{T}{\sqrt{4m}}$

9.8 The belt drive is designed on the basis of the angle of contact on the
(a) larger pulley (b) smaller pulley (c) any pulley

9.9 The law of belting states that the centre line of the belt when it _____ a pulley must lie in the mid-plane of that pulley.
(a) leaves (b) approaches (c) approaches as well as leaves

9.10 The ratio of tight and slack side tensions in a V-belt or rope is
(a) $e^{\mu\theta \sin \alpha}$ (b) $e^{\mu\theta/\cos \alpha}$ (c) $e^{\mu\theta \cos \alpha}$ (d) $e^{\mu\theta/\sin \alpha}$

9.11 An increase in the initial tension in the belt _____ the power transmitted.
(a) increases (b) decreases (c) does not effect

Chapter 10 Gears

10.1 Two parallel shafts can be connected by _____ gears.
(a) straight spur (b) spiral
(c) cross-helical (d) straight bevel

10.2 Two intersecting shafts can be connected by _____ gears.
(a) straight spur (b) spiral
(c) cross-helical (d) straight bevel

10.3 Two skew shafts can be connected by _____ gears.
(a) straight spur (b) spiral bevel
(c) cross-helical (d) straight bevel

10.4 The size of gears is usually specified by
(a) circular pitch (b) outside diameter
(c) pitch circle diameter (d) inside diameter

10.5 The circular pitch of spur gears is the ratio of the
(a) number of teeth to the pitch diameter
(b) pitch diameter to the number of teeth
(c) circumference of the pitch circle to the number of teeth
(d) circumference of the pitch circle to the diameter of pitch circle

10.6 The module of spur gears is the ratio of the
(a) number of teeth to the pitch diameter
(b) pitch diameter to the number of teeth
(c) circumference of the pitch circle to the number of teeth
(d) circumference of the pitch circle to the diameter of pitch circle

10.7 The pressure angle of spur gears is kept small
(a) to reduce axial thrust on the bearings
(b) to increase the force for power transmission
(c) for both (a) and (b)
(d) none of (a) and (b)

10.8 The contact ratio of gears is always
(a) more than one (b) one (c) less than one (d) zero

10.9 In case of involute gear teeth, the pressure angle is
(a) same at all points of contact
(b) maximum at the engagement of teeth
(c) minimum at the engagement of teeth
(d) zero at the pitch point

10.10 The ratio of circular pitch and the module is
(a) π (b) $1/\pi$ (c) π^2 (d) $1/\pi^2$

10.11 The path of contact in involute tooth profiles is a
(a) parabola (b) circle (c) straight line (d) curve

10.12 Interference occurs in case of
(a) cycloidal profile teeth (b) involute profile teeth
(c) in both of them

10.13 The minimum number of teeth in a rack and pinion for a 20° pair angle teeth is
(a) 20 (b) 18 (c) 22 (d) 24

10.14 The normal circular pitch in helical gears is given by
(a) $p \sin \psi$ (b) $p/\sin \psi$ (c) $p \cos \psi$ (d) $p/\cos \psi$

10.15 The maximum efficiency of spiral gears is given by
(a) $\dfrac{\cos(\theta - \varphi) + 1}{\cos(\theta + \varphi) + 1}$ (b) $\dfrac{\cos(\theta + \varphi) - 1}{\cos(\theta - \varphi) + 1}$
(c) $\dfrac{\cos(\theta + \varphi) + 1}{\cos(\theta - \varphi) - 1}$ (d) $\dfrac{\cos(\theta + \varphi) + 1}{\cos(\theta - \varphi) + 1}$

10.16 The maximum efficiency of a worm and worm wheel is given by
(a) $\dfrac{1 - \sin \varphi}{1 + \sin \varphi}$ (b) $\dfrac{1 + \sin \varphi}{1 - \sin \varphi}$ (c) $\dfrac{1 - \cos \varphi}{1 + \sin \varphi}$ (d) $\dfrac{1 - \sin \varphi}{1 + \cos \varphi}$

Chapter 11 Gear Trains

11.1 In a simple gear train, there is an odd number of idlers. The direction of rotation of the driver and the driven gears will be
(a) opposite
(b) same
(c) depends upon number of teeth of the gears

11.2 In a reverted gear train, the axes of the first and last gear are
(a) parallel (b) co-axial (c) neither parallel nor co-axial

11.3 If the axes of the first and last gear of a compound gear train are co-axial, the gear train is known as
(a) simple (b) epicyclic (c) reverted (d) compound

11.4 In a gear train, the train value is given by
(a) $\dfrac{N_1}{N_n}$ (b) $\dfrac{N_n}{N_1}$ (c) $N_1 \times N_n$ (d) $N_n - N_1$

11.5 The speed ratio of a gear train is
(a) equal to the train value
(b) reciprocal of the train value

11.6 A gear train in which axes of gears have motion are called _____ gear trains.
(a) epicyclic (b) simple (c) compound (d) reverted

11.7 In a clock mechanism, the hour and minute hands are connected by _____ gear train.
(a) simple (b) epicyclic (c) compound (d) reverted

11.8 A differential uses _____ gear train.
(a) simple (b) epicyclic (c) reverted (d) compound

Chapter 12 Static Force Analysis

12.1 A pair of action and reaction forces acting on a body are known as
(a) applied forces (b) constraint forces
(c) accelerating forces (d) inertia forces

12.2 In static equilibrium the vector sum of all the forces acting on the body and all the moments about _____ point is zero.
(a) a fixed (b) a particular (c) any arbitrary (d) a permanent

12.3 If the lines of action of three or more forces intersect at a point, it is known as the _____ point.
(a) equilibrium (b) central (c) zero (d) concurrency

12.4 A part isolated from the mechanism _____ be in equilibrium.
(a) may (b) may or may not (c) must

Chapter 13 Dynamic Force Analysis

13.1 Acceleration of the piston of a reciprocating engine is _____.
(a) $r\omega^2\left(\sin\theta + \frac{\sin 2\theta}{n}\right)$ (b) $r\omega\left(\cos\theta + \frac{\cos 2\theta}{n}\right)$
(c) $r\omega^2\left(\cos\theta + \frac{\cos 2\theta}{4\pi}\right)$ (d) $r\omega^2\left(\cos\theta + \frac{\cos 2\theta}{n}\right)$

13.2 Crank effort is the net force applied at the crankpin _____ to the crank which gives the required turning moment on the crankshaft.
(a) parallel (b) perpendicular (c) at 45° (d) 135°

13.3 In a dynamically equivalent system, a uniformly distributed mass is divided into _____ point masses.
(a) two (b) three (c) four (d) five

13.4 Any distributed mass can be replaced by two point masses to have the same dynamical properties if
(a) the sum of the two masses is equal to the total mass
(b) the combined centre of mass coincides with that of the rod
(c) the moment of inertia of two point masses about the perpendicular axis through their combined centre of mass is equal to that of the rod
(d) all of the above

13.5 The maximum fluctuation of energy is the
(a) ratio of maximum and minimum energies
(b) sum of maximum and minimum energies
(c) difference of maximum and minimum energies
(d) difference of maximum and minimum energies from mean energy

13.6 The maximum fluctuation of energy in a flywheel is equal to
(a) $I\omega(\omega_1 - \omega_2)$ (b) $I\omega^2 K$ (c) $2KE$
(d) All (e) none

Chapter 14 Balancing

14.1 Static balancing involves balancing of
(a) forces (b) couples
(c) forces as well as couples (d) masses

14.2 In case of rotating masses, the magnitude of the balancing mass is _____ when the speed of the shaft is doubled.
(a) doubled (b) halved (c) unaffected (d) quadrupled

14.3 For complete dynamic balance, at least _____ mass/masses are necessary.
(a) two (b) three (c) four (d) one

14.4 If a rotating system is dynamically balanced, it is statically
(a) balanced (b) unbalanced (c) partially balanced

14.5 The magnitude of the secondary force is _____ the primary force.
(a) more than (b) less than (c) equal to

14.6 In reciprocating engines, the primary unbalanced force
(a) cannot be balanced (b) can be fully balanced
(c) can be partially balanced

14.7 The primary unbalanced force is maximum when the angle of crank with the line of stroke is _____.
(a) 45° (b) 90° (c) 135° (d) 180°

Chapter 15 Brakes and Dynamometers

15.1 Which of the following brakes is commonly used in motor cars?
(a) Band brake (b) Shoe brake
(c) Band and block brake (d) Internal expanding shoe brake

15.2 Brakes commonly used in trains are _____ brakes.
(a) band (b) shoe
(c) band and block (d) internal expanding shoe

15.3 In a self-locking brake, the force required to apply the brake is
(a) minimum (b) zero (c) maximum

15.4 When the frictional force helps the applied force in applying the brake, the brake is
(a) self-locking (b) automatic (c) self-energising

15.5 In an internal expanding shoe brake, more than 50% of the total braking torque is supplied by
(a) leading shoe (b) trailing shoe (c) any of the two

15.6 The ratio of tensions on the tight and slack sides in a band and block brake is given by
(a) $\frac{T_n}{T_o} = \left(\frac{1 - \mu \tan\theta}{1 + \mu \tan\theta}\right)^n$ (b) $\frac{T_n}{T_o} = \left(\frac{1 + \mu \tan\theta}{1 - \mu \tan\theta}\right)^n$
(c) $\frac{T_n}{T_o} = \left(\frac{1 + \mu \tan\theta}{1 - \mu \tan\theta}\right)^{1/n}$ (d) $\frac{T_n}{T_o} = \left(\frac{1 - \mu \tan\theta}{1 - \mu \tan\theta}\right)^{1/n}$

15.7 The tractive resistance during the propulsion of a wheeled vehicle depends on
(a) road resistance (b) aerodynamic resistance
(c) gradient resistance (d) all the above.

Chapter 16 Governors

16.1 A _____ governor is a spring-loaded governor.
(a) Watt (b) Hartnell (c) Porter (d) Proell

16.2 The height of a Watt governor is
(a) g/ω^3 (b) ω^2/g (c) $g\omega^2$ (d) g/ω^2

16.3 The ratio of the height of a Porter governor to that of a Watt governor when the lengths of the links and the arms are the same is

(a) $\frac{M+m}{M}$ (b) $\frac{M+m}{m}$ (c) $\frac{M}{M+m}$ (d) $\frac{m}{M+m}$

16.4 A Hartnell governor is a/an _____ governor.

(a) dead weight (b) pendulum type
(c) inertia (d) spring-loaded

16.5 The frictional resistance at the sleeve _____ the sensitivity of the governor.

(a) does not affect (b) increases
(c) decreases (d) may increase or decrease

16.6 The governor is said to be _____ when the speed of the engine fluctuates continuously above and below the mean speed.

(a) isochronous (b) hunting
(c) insensitive (d) stable

16.7 If the controlling force of a spring-controlled governor is expressed as $a.r + b$, where r is the radius of rotation and a and b are constants, it is a/an _____ governor.

(a) isochronous (b) centrifugal
(c) dead-weight (d) inertia

16.8 In a governor if the equilibrium speed is constant for all radii of rotation of balls, the governor is said to be

(a) stable (b) unstable (c) inertia (d) isochronous

16.9 The force resisting the outward movement of balls is known as _____ of the governor.

(a) effort (b) centripetal force
(c) controlling force (d) inertia force

16.10 In a Wilson–Hartnell governor, the balls are connected by

(a) one spring (b) two springs in series
(c) two parallel springs (d) four springs

16.11 The effort of a governor is the force exerted by the governor on the

(a) balls (b) sleeve (c) upper links (d) lower links

16.12 The condition of isochronism can be realised in a _____ governor.

(a) Watt (b) Porter (c) Proell (d) Harnell

Chapter 17 Gyroscope

17.1 The magnitude of the gyroscopic couple applied to a disc of moment of inertia I, spinning with an angular velocity ω and having an angular velocity of precession ω_p is

(a) $I^2\omega\omega_p$ (b) $I\omega^2\omega_p$ (c) $I\omega\omega_p^2$ (d) $I\omega\omega_p$

17.2 The gyroscopic acceleration is given by

(a) $\frac{\delta\omega}{\delta t}$ (b) $\omega\frac{\delta\theta}{\delta t}$ (c) $r\frac{\delta\theta}{\delta t}$ (d) $r\frac{\delta\omega}{\delta t}$

17.3 If the air screw of an aeroplane rotates clockwise when viewed from the rear and the aeroplane takes a right turn, the gyrosocopic effect will

(a) tend to raise the tail and depress the nose
(b) tend to raise the nose and depress the tail
(c) tilt the aeroplane about spin axis
(d) none of above

17.4 The axis of spin, the axis of precession and the axis of gyroscopic torque are in
(a) two parallel planes (b) two perpendicular planes
(c) three perpendicular planes (d) three parallel planes

17.5 The effect of gyroscopic torque on the naval ship when it is rolling and the rotor is spinning about the longitudinal axis is
(a) to raise the bow and lower the stern
(b) to lower the bow and raise the stern
(c) to turn the ship to one side
(d) none of the above

Chapter 18 Vibrations

18.1 A reduction in amplitude of successive oscillations indicate _____ vibrations.
(a) free (b) force (c) damped (d) natural

18.2 The particles of a body move _____ its axis in longitudinal vibrations.
(a) in a circle about (b) parallel to
(c) perpendicular to (d) away from

18.3 The particles of a body move _____ its axis in torsional vibrations.
(a) in a circle about (b) parallel to
(c) perpendicular to (d) away from

18.4 In a spring-mass system, if the mass is halved and the spring stiffness is doubled, the natural frequency is
(a) halved (b) doubled (c) unchanged (d) quadrupled

18.5 In free vibrations, the velocity vector leads the displacement vector by
(a) π (b) $\pi/2$ (c) $\pi/3$ (d) $2\pi/3$

18.6 In free vibrations, the acceleration vector leads the displacement vector by
(a) π (b) $\pi/2$ (c) $\pi/3$ (d) $2\pi/3$

18.7 The amplitude ratio of two successive oscillations of a damped vibratory system is
(a) more than one (b) less than one
(c) equal to one (d) variable

18.8 An over-damped system
(a) does not vibrate at all
(b) vibrates with frequency more than the natural frequency of system
(c) vibrates with frequency less than the natural frequency of system
(d) vibrates with frequency equal than the natural frequency of system

18.9 The ratio of the amplitude of the steady-state response of forced vibrations to the static deflection under the action of a static force is known as
(a) damping ratio (b) damping factor
(c) transmissibility (d) magnification factor

18.10 The frequency of damped vibrations is always _____ the natural frequency.
(a) equal to (b) more than (c) less than (d) double

18.11 If ω/ω_n is more than $\sqrt{2}$ in a vibration isolation system then for all values of the damping factor, the transmissibility is
(a) less than $\sqrt{2}$ (b) more than $\sqrt{2}$
(c) less than unity (d) more than unity

18.12 Resonance is a phenomenon in which the frequency of the exciting force is _____ to the natural frequency of the system.
(a) double (b) half (c) equal (d) thrice

18.13 At resonance, the amplitude of vibration is
(a) very large (b) small
(c) zero (d) depends upon frequency

18.14 At a certain speed, revolving shafts tend to vibrate violently in transverse directions. The speed is known as
(a) whirling speed (b) critical speed (c) whipping speed
(d) all of these (e) none of these

18.15 The critical speed of a rotating shaft with a mass at the centre is _____ the natural frequency of transverse vibration of the system.
(a) equal (b) less than
(c) more than (d) dependent upon

18.16 A torsional vibratory system having two rotors connected by a shaft has
(a) one node (b) two nodes (c) three nodes (d) no node

18.17 A torsional vibratory system having three rotors connected by a shaft has
(a) one node (b) two nodes (c) three nodes (d) no node

Chapter 19 Automatic Control

19.1 A block diagram is a symbolic outline of a system in which various components or operations are represented by _____ in an ordered sequence.
(a) circles (b) rectangles
(c) triangles (d) parallelograms

19.2 In a first-order system, the response is given by _____.
(a) $y = \left(e^{-\frac{t}{T}} - 1\right)$ (b) $y = x - e^{-\frac{t}{T}}$
(c) $y = x\left(1 - e^{-\frac{t}{T}}\right)$ (d) $y = x\left(1 - xe^{-\frac{t}{T}}\right)$

19.3 The transfer function is the operational relationship of the output and the
(a) command (b) response (c) input (d) error

ANSWERS

Chapter 1

1.1 (b)	1.2 (c)	1.3 (a)	1.4 (b)	1.5 (c)	1.6 (a)
1.7 (c)	1.8 (a)	1.9 (b)	1.10 (c)	1.11 (b)	

Chapter 2

2.1 (b)	2.2 (a)	2.3 (a)	2.4 (b)	2.5 (c)	2.6 (c)
2.7 (b)	2.8 (b)	2.9 (a)	2.10 (c)		

Chapter 3

3.1 (b)	3.2 (a)	3.3 (c)	3.4 (b)	3.5 (b)	3.6 (d)
3.7 (b)					

Chapter 4

4.1 (c)	4.2 (c)	4.3 (a)	4.4 (a)

Chapter 5

5.1 (b)	5.2 (a)	5.3 (a)

Chapter 6

6.1 (a)	6.2 (b)	6.3 (c)	6.4 (b)	6.5 (b)	6.6 (d)
6.7 (c)	6.8 (c)	6.9 (c)	6.10 (b)	6.11 (b)	6.12 (a)

Chapter 7

7.1 (c)	7.2 (b)	7.3 (a)	7.4 (c)	7.5 (d)	7.6 (c)
7.7 (b)	7.8 (a)	7.9 (b)	7.10 (a)	7.11 (d)	

Chapter 8

8.1 (a)	8.2 (d)	8.3 (c)	8.4 (d)	8.5 (b)	8.6 (c)
8.7 (d)	8.8 (a)	8.9 (b)	8.10 (b)	8.11 (d)	

Chapter 9

9.1 (d)	9.2 (c)	9.3 (b)	9.4 (b)	9.5 (b)	9.6 (b)
9.7 (c)	9.8 (b)	9.9 (b)	9.10 (d)	9.11 (a)	

Chapter 10

10.1 (a)	10.2 (d)	10.3 (c)	10.4 (c)	10.5 (c)	10.6 (b)
10.7 (c)	10.8 (a)	10.9 (a)	10.10 (a)	10.11 (c)	10.12 (b)
10.13 (b)	10.14 (c)	10.15 (d)	10.16 (a)		

Chapter 11

11.1 (b)	11.2 (b)	11.3 (c)	11.4 (b)	11.5 (b)	11.6 (a)
11.7 (d)	11.8 (b)				

Chapter 12

12.1 (b)	12.2 (c)	12.3 (d)	12.4 (c)

Chapter 13

13.1 (b)	13.2 (b)	13.3 (a)	13.4 (c)	13.5 (c)	13.6 (d)

Chapter 14

14.1 (a)	14.2 (c)	14.3 (a)	14.4 (a)	14.5 (b)	14.6 (c)
14.7 (d)					

Chapter 15

15.1 (d)	15.2 (b)	15.3 (b)	15.4 (c)	15.5 (a)	15.6 (b)
15.7 (d)					

Chapter 16

16.1 (b)	16.2 (d)	16.3 (b)	16.4 (d)	16.5 (c)	16.6 (b)
16.7 (a)	16.8 (d)	16.9 (c)	16.10 (c)	16.11 (b)	16.12 (d)

Chapter 17

17.1 (d)	17.2 (b)	17.3 (a)	17.4 (c)	17.5 (d)

Chapter 18

18.1 (c)	18.2 (b)	18.3 (a)	18.4 (b)	18.5 (b)	18.6 (a)
18.7 (b)	18.8 (a)	18.9 (d)	18.10 (c)	18.11 (c)	18.12 (c)
18.13 (a)	18.14 (d)	18.15 (a)	18.16 (a)	18.17 (b)	

Chapter 19

19.1 (b)	19.2 (c)	19.3 (c)

Appendix II

IMPORTANT RELATIONS AND RESULTS

1. For degree of freedom of mechanisms,
   - ∞ *Kutzback's* criterion, $F = 3(N-1) - 2P_1 - 1P_2$
   - ∞ *Gruebler's* criterion, $F = 3(N-1) - 2P_1$
   - ∞ *Author's* criterion, $F = N - (2L+1)$ and $P_1 = N + (L-1)$
2. The number of Instantaneous-centres in a mechanism, $N = n(n-1)/2$
3. The angle of the output link of a four-link mechanism, $\varphi = 2\tan^{-1}\left[\dfrac{-B \pm \sqrt{B^2 - 4AC}}{2A}\right]$

   where $2k = a^2 - b^2 + c^2 + d^2$, $A = k - a(d-c)\cos\theta - cd$
   $B = -2ac\sin\theta$ and $C = k - a(d+c)\cos\theta + cd$
4. The angle of the coupler link of four-link mechanism, $\beta = 2\tan^{-1}\left[\dfrac{-E \pm \sqrt{E^2 - 4DF}}{2D}\right]$

   where $2k' = a^2 + b^2 - c^2 + d^2$, $D = k' - a(d+b)\cos\theta + bd$
   $E = 2ab\sin\theta$ and $F = k' - a(d-b)\cos\theta - bd$
5. The angular velocities of the output and coupler links of a four-link mechanism,

   $$\omega_c = \frac{a\omega_\alpha \sin(\beta-\theta)}{c\sin(\beta-\varphi)} \text{ and } \omega_b = -\frac{a\omega_\alpha \sin(\varphi-\theta)}{b\sin(\varphi-\beta)}$$
6. The angular accelerations of the output and coupler links of a four-link mechanism,

   $$a_c = \frac{a\alpha_a \sin(\beta-\theta) - a\omega_a^2\cos(\beta-\theta) - b\omega_b^2 + c\omega_c^2\cos(\beta-\varphi)}{c\sin(\beta-\varphi)}$$

   and $$a_b = \frac{a\alpha_a \sin(\varphi-\theta) - a\omega_a^2\cos(\varphi-\theta) - b\omega_b^2\cos(\varphi-\beta) + c\omega_c^2}{b\sin(\beta-\varphi)}$$
7. The displacement of the slider of a slider-crank mechanism, $d = \dfrac{-C_1 \pm \sqrt{C_1^2 - 4C_2}}{2}$

   where $C_1 = -2a\cos\theta$ and $C_2 = a^2 - b^2 + e^2 - 2ae\sin\theta$
8. The angle of the coupler link of a slider-crank mechanism, $\beta = \sin^{-1}\dfrac{e - a\sin\theta}{b}$
9. The velocities of the slider and the coupler of a slider-crank mechanism,

   $$\dot{d} = \frac{a\omega_a \sin(\beta-\theta)}{\cos\beta} \text{ and } \omega_b = \frac{a\omega_a\cos\theta}{b\cos\beta}$$

10. The accelerations of the slider and the coupler link of a slider-crank mechanism,

$$\ddot{d} = \frac{a\alpha_a \sin(\beta-\theta) - a\omega_a^2 \cos(\beta-\theta) - b\omega_b^2}{\cos\beta}$$

and $$\alpha_b = \frac{a\alpha_a \cos\theta - a\omega_a^2 \sin\theta - b\omega_b^2 \sin\beta}{b\cos\beta}$$

11. *Freudenstein's* equation is

$$\frac{d}{a}\cos\varphi - \frac{d}{c}\cos\theta + \frac{a^2-b^2+c^2+d^2}{2ac} = \cos(\theta-\varphi) = \cos(\varphi-\theta)$$

12. For n accuracy positions in the range $x_o \le x \le x_{n+1}$, the Chebychev spacing given by

$$x_i = \frac{x_{n+1}+x_o}{2} - \frac{x_{n+1}-x_o}{2}\cos\frac{(2i-1)\pi}{2n} \text{ where i = 1, 2, 3 ....}n$$

13. In a simple harmonic motion of follower,

$$v_{\max} = \frac{h}{2}\frac{\pi\omega}{\varphi} \text{ at } \theta = \frac{\varphi}{2} \quad \text{and} \quad f_{\max} = \frac{h}{2}\left(\frac{\pi\omega}{\varphi}\right)^2 \text{ at } \theta = 0^\circ$$

14. In constant acceleration and deceleration of follower,

$$f = \frac{4h\omega^2}{\varphi^2} \text{ and } v_{\max} = \frac{2h\omega}{\varphi} \text{ at } \theta = \varphi/2$$

15. In constant velocity of the follower, $v = \dfrac{h\omega}{\varphi}$

16. In cycloidal motion, $v_{\max} = \dfrac{2h\omega}{\varphi}$ at $\theta = \dfrac{\varphi}{2}$ and $f_{\max} = \dfrac{2h\pi\omega^2}{\varphi^2}$ at $\theta = \dfrac{\varphi}{4}$

17. When a body slides up the plane, $\eta = \dfrac{\cot(\alpha+\theta) - \cot\theta}{\cot\alpha - \cot\theta}$

    If the direction of the applied force is horizontal, $\eta = \dfrac{\tan\alpha}{\tan(\alpha+\varphi)}$

18. When the body moves down the plane, $\eta = \dfrac{\cot\alpha - \cot\theta}{\cot(\varphi-\alpha) + \cot\theta}$

    If the direction of the applied force is horizontal, $\eta = \dfrac{\tan(\varphi-\alpha)}{\tan\alpha}$

19. For flat collars, friction torque is

$$T = \frac{2\mu F(R_o^3 - R_i^3)}{3(R_o^2 - R_i^2)} \text{ with uniform pressure theory}$$

$$= \frac{\mu F}{2}(R_o^2 + R_i^2) \text{ with uniform wear theory}$$

20. For conical collars, friction torque = $\dfrac{\text{friction torque for flat collares}}{\sin\alpha}$

21. When the belt is on the point of slipping on the pulleys, $\dfrac{T_1}{T_2} = e^{\mu\theta}$ for flat belt drive, and $\dfrac{T_1}{T_2} = e^{\mu\theta/\sin\alpha}$ for V-belt drive

22. Power transmitted in belts, $P = (T_1 - T_2)\ v$

23. Initial tension in the belt, $T_o = \dfrac{T_1 + T_2}{2}$

24. Path of contact in gears $= \left[\sqrt{R_a^2 - R^2 \cos^2 \varphi} - R \sin \varphi\right] + \left[\sqrt{r_a^2 - r^2 \cos^2 \varphi} - r \sin \varphi\right]$

25. Arc of contact $= \dfrac{\text{Path of contact}}{\cos \varphi}$

26. The minimum number of teeth on the wheel, $T = \dfrac{2a_w}{\sqrt{1 + \dfrac{1}{G}\left(\dfrac{1}{G} + 2\right)\sin^2 \varphi - 1}}$

27. Maximum efficiency of worm gear, $\eta_{\max} = \dfrac{1 - \sin \varphi}{1 + \sin \varphi}$

28. Inertia force on the piston, $F_b = mf = mr\omega^2 \left(\cos \theta + \dfrac{\cos 2\theta}{n}\right)$

29. Turning moment on the piston $= Fr\left(\sin \theta + \dfrac{\sin 2\theta}{2\sqrt{n^2 - \sin^2 \theta}}\right)$

30. In flywheels, maximum fluctuation of energy, $e = \dfrac{1}{2} I(\omega_1^2 - \omega_2^2) = I\omega^2 K$

    and coefficient of fluctuation of speed, $K = \dfrac{e}{I\omega^2} = \dfrac{e}{2E}$

31. In a reciprocating engine,

    Primary accelerating force $= mr\omega^2 \cos\theta$

    Secondary accelerating force $= mr\omega^2 \cos(2\theta)/n$

32. In a block brake, if the angle of contact is more than 40°, $\mu' = \mu\left(\dfrac{4 \sin(\theta/2)}{\theta + \sin \theta}\right)$

33. In a band and block brake, $\dfrac{T_n}{T_o} = \left(\dfrac{1 + \mu \tan \theta}{1 - \mu \tan \theta}\right)^n$

34. In a Watt governor, height of governor, $h = \dfrac{895}{N^2}$ m

35. In a Hartnell governor, stiffness of spring, $s = 2\left(\dfrac{a}{b}\right)^2 \left(\dfrac{F_2 - F_1}{r_2 - r_1}\right)$

36. In a Wilson–Hartnell governor, $\dfrac{F_2 - F_1}{r_2 - r_1} = 4s + \dfrac{S_a}{2}\left(\dfrac{b}{a}\dfrac{y}{x}\right)^2$

37. Damping factor in a vibrating system, $\zeta = c/c_c$

38. The frequency of an undamped system ($\zeta = 0$), $\omega_n = \sqrt{g/\Delta}$

39. In an underdamped system ($\zeta < 1$), $\omega_d = \sqrt{1 - \zeta^2}\,\omega_n$ and $T_d = 2\neq/\omega_d$

40. At critical damping $\xi = 1$, $\omega_d = 0$ and $T_d = \infty$

41. Transfer function,

    ∞ In open loop, $TF = \dfrac{\theta_0}{\theta_i} = F_4(D)\, F_3(D)\, F_1(D) = KG(D)$

    ∞ In closed loop, $TF = \dfrac{\theta_0}{\theta_i} = \dfrac{KG(D)}{1 + KG(D)} = \dfrac{\text{Open loop TF}}{1 + \text{Open loop TF}}$

INDEX

Absolute motion *38*
Absorption dynamometer *549*
Accelerating force
  primary *490*
  secondary *490*
Acceleration *79*
  centripetal *80*
  Coriolis component *97*
  image *84*
  of intermediate points *83*
  of offset points *83*
  of piston *437, 438*
  radial *80*
  tangential *80*
Ackermann steering gear *194, 196*
Actuator *678*
Addendum *339*
Addendum circle *339*
Addendum coefficient *356*
Adsorbed film *286*
Amplification *678*
Analysis of mechanisms *1, 124*
Andrew variable stroke engine *53*
Angle
  of action *213, 341*
  of ascent *213*
  of dwell *213*
  of descent *213*
  of friction *25*
  helix *364*
  lead *370*
  of obliquity *340*
  pressure *340*
  repose *252*
Angular acceleration *597, 599*
  of connecting rod *439*
  of links *83*
Angular velocity of links *43*
Angular velocity of
  precession *599*
Angular velocity ratio theorem *68*
Anti-friction bearings *284*
Applied forces *410*
Arc of approach *341*
Arc of contact *341, 350*
Arc of recess *341*
Automatic control *677*
  closed-loop *677*
  monitored *677*
  open-loop *677*
  unmonitored *677*
Automobile steering gears
  Ackeramann *194, 196*
  Davis *194*
  types *194*
Automotive propulsion *553*

Balancing *477*
  dynamic *480*
  field *524*
  In different planes *481*
  machines *520*
    static *520*
    dynamic *521*
  of in-line engines *497*
    two-cylinder *498*
    four-cylinder *499*
    six-cylinder *500*
  of linkages *488*
  of locomotives *492*
  of radial engines *515*
  of reciprocating mass *490*
  of V-engines *509*
  of V-8 engines *513, 514*
  of V-12 engines *513, 514*
  of W–engines *513*
  secondary *496*
  static *477*
Ball bearings *284*
Ball's point *121*
Band brake *536*
Band and block brake *541*
Base circle
  cam *212*
  gear *346*
Bearings
  anti-friction *284*
  ball *284*
  collar *267*
  footstep *267*
  Mitchell thrust *290*
  pivot *267*
  roller *285*
  thrust on *441*
Belt
  action on pulleys *298*
  centrifugal effect on *315*
  creep in *324*
  crossed drive *298*
  flat *310*
  initial tension in *320*
  law of (belting) *304*
  length of crossed *306*
  length of open *304*
  material *301*
  maximum power transmitted *316*
  open drive *298*
  power transmitted *312*
  ratio of friction tensions *310*
  slip *299*
  V *311*
  velocity ratio *299, 324*
Bevel gears *334, 372*
  epicyclic *397*
  spiral *334*
  straight *334*

zerol *334*
Block diagrams *678*
Bobillier construction *118*
Bobillier theorem *118*
Body centrode *74*
Body guidance *175*
Brakes *530*
band *536*
band and block *541*
block *530*
effect of (braking) *547*
internal expanding shoe *544*
self energised *531*
self locking *531*
shoe *530*
types *530*
Braking effect *547*

Cam
angle of action *208*
angle of ascent *213*
angle of decent *213*
angle of dwell *213*
barrel *210*
base circle *212*
circular arc *233, 234*
conjugate *210*
convex *233, 234*
cylindrical *209*
disc *209*
drum *210*
eccentric *240*
elastic *243*
flat *208*
globoidal *210*
gravity *211*
high speed *215*
jump *241, 245*
pitch curve *212*
pitch circle *213*
pitch point *213*
positive drive *211*
pre-loaded *211*
pressure angle *212*
prime circle *213*
profile, layout of *222*
radial *209*
rigid eccentric *240*
spiral *209*
spherical *210*
spring surge in *245*
tangent *231*
trace point *212*
types *208*
unbalance in *245*
undercutting *215*
wedge *208*
wind up in *245*
with specified contours *231*
Centre of curvature *114*
Centre distance of
helical gears *364*
worm gears *370*
Centrifugal governors *559*
Centrifugal clutch *275*
Centripetal acceleration *80*
Centrode
body *74*
moving *74*
fixed *74*
space *74*
Chain *327*
block *328*
classification *328*
conveyor *328*
hoisting *328*
inverted tooth *329*
length of *326*
power transmission *328*
roller *328*
silent *329*
speed ratio *327*
sprocket *326*
Chebychev spacing *168*
Circular-arc cams 233, *234*
Circular pitch *338, 364*
Clearance *339*
Closed pair *4*
Clutches *273*
centrifugal *275*
cone *275*
disc *274*
multi plate *274*
single plate *274*
Coefficient of
fluctuation of energy *460*
fluctuation of speed *460*
friction *250*
Coincident points *62*
Collar *267*
Conical *268, 270*
flat *268, 269*
frustrum of cone *270*
Collar bearing *267*
Complex numbers *63, 111*
Compound epicyclic gear *399*
Computer-aided analysis of
four link mechanism *124*
slider crank mechanism *136*
Computer-aided synthesis *144*
Constraint forces *410*
Constrained motion
completely *2*
incompletely *2*
successfully *2*
types *2*
Cone clutch *275*
Cone pulley *307*
Configuration diagram *38*
Conical collar *268, 270*
Conjugates *115*
Conjugate point *115, 119*
Connecting rod
angular acceleration of *439*
angular velocity of *439*
force (thrust) along *441*
inertia of *446*
Contact length *340*
Contact ratio *341, 351*
Control, automatic *679*
Convex cams *233, 234*
Coriolis acceleration
component *97*
Correction couple *448*
Coupler *18*
Coupler curves *140*
Cramer's rule *160*
Crank-crank mechanism *19*
Crank effort *441*
Crank effort diagrams *458*
Crank-lever mechanism *20*
Crank-rocker mechanism *20*
Crank and slotted lever
mechanism *28*
Critical speed *657*
Crowning of pulleys *301*
Cubic of stationary curvature *120*
Cycloidal motion *220*
Cycloidal profile teeth *343*

D'Alembert's principle *434*
Damped vibrations *629*
Damping *680*

Damping coefficient *629*
Damping factor *630*
Damping ratio *630*
Davis steering gear *194*
Dead angle *288*
Dead centre position *288*
Dedendum *339*
Dedendum circle *339*
Degree of freedom *5*
Deltoid linkage *20*
Differentials *405*
Differential gear *406*
Direct and reverse cranks *515*
Double lever mechanism *20*
Double Hooke's joint *204*
Double parallelogram linkage *10*
Double rocker mechanism *20*
Double slider crank chain *30*
Drag crank mechanism *19*
Dunkerley's method *655*
Dynamic balancing *480*
Dynamic force analysis *434*
Dynamically equivalent
  system *445*
Dynamics *1*
Dynamometers *530, 549*
  absorption *549*
  belt transmission *551*
  Bevis-Gibson torsion *553*
  epicyclic train *552*
  prony brake *550*
  rope brake *550*
  transmission *549*
  types *549*

Eccentric cam *240*
Effective driving force *440*
Efficiency of
  helical gears *365*
  spiral gears *365*
  worm gears *371*
Elastic cam system *243*
Element *3*
Elliptical trammel *30*
Equilibrium of members with
  two forces *411*
  two forces and a torque *412*
  three forces *411*
  four forces *412*
Energy method *655*
Engine indicator *189*
  Crosby *190*
  Dobbie mclnnes *192*
  Simplex *190*
  Thomson *191*
Epicyclic gear *381*
  bevel *397*
  compound *399*
Epicyclic train dynamometer *552*
Equilibrium of
  two-force member *411*
  three-force member *411*
  four-force member *412*
Equilibrium method *618*
Equivalent mechanism *14*
Equivalent offset inertia force *435*
Error detector *677*
Euler-Savary equation *116*

Feedback *677*
Ferguson's paradox *408*
Film friction *249, 289*
Field balancing *524*
First order system response *680*
Fluctuation of energy *460*
  coefficient of *460*
  maximum *460*
Fluctuation of speed *459*
  coefficient *460*
  maximum *460*
Flywheels *460*
Flywheel rims *469*
Follower
  displacement
    programming *213*
  flat faced *212*
  knife edge *211*
  mushroom *212*
  offset *212*
  oscillating *212*
  radial *212*
  reciprocating *212*
  roller *211*
  spherical faced *212*
  types *211*
Follower motions *216*
  constant accel, and decel. *218*
  constant velocity *219*
  cycloidal *220*
  SHM *216*
Footstep bearing *267*
Force analysis
  dynamic *434*
  static *410*
Forced vibrations
  damped *638*
  harmonic *637*
  periodic *637*
  step input 63
Forces
  constraint *410*
  applied *410*
Forcing due to
  unbalance *646*
  support motion *648*
Forms of teeth *343*
Four-bar chain *18*
Four-link mechanism *41, 81, 124, 148, 151, 435*
Free-body diagrams *413*
Free longitudinal vibrations *618*
Free torsional vibrations *666, 667*
  of geared system *671*
Friction
  angle of *251*
  axis *286*
  boundary *249, 285*
  circle *286*
  clutches *273*
  coefficient of *250*
  dry *249*
  film *249, 289*
  greasy *249, 285*
  in mechanisms *428*
  kinds *249*
  laws of *250*
  limiting angle of *251*
  rolling *249, 284*
  skin *249*
  solid *249*
  tension *310*
  wheels *332*
Freudenstein's equation *159*
Function generation *144, 148, 151, 159*
Fundamental frequency *667*

Gear ratio *338*
Gear box
  sliding *400*
  pre-selective *401*
Gears
  bevel *334, 372*

classification *333*
conjugate *343*
contact ratio *341, 351*
crossed helical *335, 336*
differential *405*
double helical *333*
epicyclic *381*
for intersecting shafts *334*
for parallel shafts *333*
for scew shafts *334*
helical *333, 336, 362*
Herringbone *333*
Humpage *409*
hypoid *337*
Interchangeable *348*
Interference in involute *354*
law of (gearing) *342*
mitre *334*
non-standard *348*
pairs of teeth in contact *351*
pressure angle *340*
spur *333*
spiral *335, 362*
rack and pinion *360*
worm *336*
zerol bevel *334*
Gear teeth
bottom land *340*
comparison of teeth forms *362*
cycloidal *343*
face *340*
face width *340*
flank *340*
forms of *343*
involute *343, 345*
left-handed *362*
minimum number of *355*
right-handed *362*
space width *339*
top land *340*
Gear trains
automotive transmission *400*
bevel epicyclic *397*
compound *379*
compound epicyclic *399*
epicyclic *381*
planetary *381*
reverted *380*
simple *378*
sun and planet *394*
torques in *390*
Geared system *671*
Governor *559*
Centrifugal *559*
coefficient of insensitiveness *590*
controlling force *589*
effort of *583*
Hartnell *569*
Hartung *574*
height of *560*
hunting *582*
inertia *560, 580*
isochronous *583*
Pickering *578*
Porter *562*
Proell *566*
power of *585*
radial spring *575*
sensitiveness of *582*
spring-controlled gravity *579*
stability of *583*
types *559*
Watt *560*
Wilson-Hartnell *575*
Graphical differentiation *111*
Graphical methods of synthesis *144*
Grass-Hopper mechanism *185*
Grashof's law *20*
Gruebler's criterion *8*
Gyroscope *597*
Gyroscopic couple *599*
Gyroscopic effect on
aeroplanes *601*
naval ships *602*
Gyroscopic torque *599*

Hammer-blow *492*
Hand pump *29*
Harmonic forcing *637*
Hartmann construction *115*
Hart mechanism *183*
Hartnell governor *569*
Hartung governor *574*
Height of governor *560*
Helical gears *333, 336, 362*
centre distance of *364*
crossed *335, 336*
double *333*
efficiency of *365*
forces in *365*
helix angle *364*
herringbone *333*
spur *333*
velocity ratio *364*
Helical pair *5*
Helix angle *364*
Herringbone gear *333*
Higher pair *4*
High speed cam *215*
Hooke's joint *197*
acceleration of driven shaft *201*
double *204*
polar velocity diagram *200*
velocity ratio *199*
Humpage reduction gear *409*
Hypoid gears *337*

Inclined plane *251*
Indexing mechanisms *33*
Indicators, engine *189*
Inertia effect *624*
Inertia force *449*
Inertia governor *560, 580*
Inertia of connecting rod *446*
Initial tension *320*
Instantaneous centre *64*
Interchangeable gears *348*
Intermediate pulley *302*
Internal expanding shoe brake *544*
Interference in gears *354*
Inversion method of synthesis *151*
Inverted slider-crank mechanism *57*
Inversions of mechanisms *27*
Involute profile teeth *343, 345*

Joints *5*

Kempe's mechanism *188*
Kennedy's theorem *65*
Kinematics *1*
Kinematics chain *6*
Kinematic derivatives *214*
Kinematics link *3*
Kinematics pair *3*
classification *6*
types *3*
Kinetics *1*
Klein's construction *112*
Kutzback's criterion *8*

Lag in response *679*
Law of
  belting *304*
  gearing *342*
Laws of friction *250*
Lazy tongs *189*
Lead *370*
Lead angle *370*
Least square technique *161*
Limiting angle of friction *251*
Line of action *340*
Line of centres *338*
Linear system *780*
Link *3*
Linkage *7*
Logarithmic decrement *633*
Longitudinal vibrations *616*
  damping coefficient *629*
  damping factor *630*
  energy method *622*
  equilibrium method *618*
  inertia effect of mass *624*
  magnification factor *641*
  Rayleigh's method *623*
Loose and fast pulley *303*
Lower pairs *4*

Machine *1*
Magnification factor *641*
Mechanical advantage *23*
Mechanism
  crank-crank *19*
  crank-lever *20*
  crank-rocker *20*
  double-crank *19*
  double-lever *20*
  double-rocker *20*
  drag-crank *19*
  of zero order *7*
  oscillating-oscillating *20*
  rotary-oscillating *20*
  rocker-rocker *20*
  rotary-rotary *19*
Mechanisms *1, 7*
  classification *7*
  degree of freedom *8*
  mobility *7*
Mitchell thrust bearing *290*
Motion
  absolute *38*
  of a link *40*
  relative *38*
Motion generation *144*
Multifilar systems *661*
  bifilar suspension *661*
  trifilar system *662*
Multiplate clutch *274*

Natural frequency *615*
Non standard gears *348*
Number synthesis *8*

Oldham's coupling *31*
Oscillating cylinder engine *28*
Oscillating-oscillating
  converter *20*

Pair *3*
Pantograph *180*
Parallel-crank four bar linkage 20
Parallel linkages *188*
Parallel ruler *188*
Path generation *144*
Path of approach *340*
Path of contact *340*
Path of recess *340*
Paucellier mechanism *181*
Periodic forcing *637*
Physical derivatives *214*
Pickering governor *578*
Pinion *333, 338*
Piston
  acceleration *437, 438*
  effort *440*
  velocity *437, 438*
  Pitch
  axial *370*
  circle *213, 337*
  circular *338, 364*
  curve *212*
  cylinder *337*
  diametral *338*
  diameter *338*
  line *338*
  module *338*
  normal circular *364*
  point *213, 338*
  surface *338*
Pivots *267, 271*
  conical *268, 272*
  flat *268, 272*
Pivot bearing *267*
Planetary gear train *381*
Polar velocity diagram *200*
Pole *144*
Porter governor *562*
Pre-selective gear box *401*
Prime circle *213*
Principle of virtual work *426*
Pressure angle *212, 340*
Primary accelerating force *490*
Proell governor *566*
Pulleys
  cone *307*
  crowning of *301*
  guide *303*
  idler *302*
  intermediate *302*
  loose and fast *303*
  stepped *307*
  types *302*

Quadric-cycle mechanism *41*
Quick return mechanisms
  crank and slotted lever *28*
  Whitworth quick return *27*

Rack *333*
Rayleigh's method *623*
Redundant chain *7*
Redundant degree of freedom *10*
Redundant link *10*
Relative motion *38*
Relative pole *146*
Relative pole method *148*
Relative velocity method *383*
Resistance
  aerodynamic *554*
  frictional *554*
  gradient *554*
  road *553*
  rolling *553*
  tractive *554*
Resistant body *3*
Resonance *641*
Rigid body *3*
Rigid-body guidance *175*
Rigid disc at an angle *612*
Robert mechanism *207*
Rocker-rocker mechanism *20*
Roller bearing *285*
Rolling pair *5*
Rolling friction *249, 284*

Root circle *339*
Rope drive *296, 297, 311*
Rope material *301*
Rotary engine *27, 28*
Rotary-oscillating converter *20*
Rubbing velocity *43*

Scotch yoke *31*
Scott-Russel mechanism *185*
Screw jack *261*
Screw pair *5*
Screw threads *255*
Secondary accelerating force *490*
Secondary balancing *496*
Servomotor *678*
Sewing machine mechanism *73*
Shaking force *490*
Shaking couple *490*
Simple conical governor *560*
Simple harmonic motion *216*
Single plate clutch *274*
Slider-crank mechanism *44, 85, 136, 151, 288, 437*
Sliding gear box *400*
Sliding pair *4*
Slip *299*
Snap action mechanisms *32*
Space centrode *74*
Speed ratio *327*
Spherical pair *5*
Spiral gears *362*
Spring surge *245*
Sprocket *326*
Spur gears
  addendum *339*
  addendum circle *339*
  addendum coefficient *356*
  angle of action *213, 341*
  angle of obliquity *340*
  arc of approach *341*
  arc of contact *341*
  arc of recess *341*
  backlash *340*
  base circle *346*
  circular pitch *338, 364*
  clearance *339*
  contact length *340*
  contact ratio *341, 351*
  cycloidal tooth profile *343*
  dedendum *339*
  dedendum circle *339*
  diametral pitch *338*
  face *340*
  face width *340*
  flank *340*
  forms of teeth *343*
  gear ratio *338*
  interference in *354*
  involute tooth profile *343, 345*
  line of action *340*
  line of centres *338*
  minimum number of teeth *355*
  module *338*
  path of approach *340*
  path of contact *340*
  path of recess *340*
  pinion *333, 338*
  pitch *338*
  pitch circle *337*
  pitch diameter *338*
  pitch line rack *338*
  pitch point *338*
  pitch surface *338*
  pressure angle *340*
  pressure line *340*
  rack *338*
  rack and pinion *333, 360*
  top land *340*
  tooth thickness *340*
  velocity of sliding *343*
  undercutting *361*
Square threads *256*
Stability of automobile *605*
Stability of two-wheel vehicle *610*
Static balancing *477*
Static equilibrium *410*
Static force analysis *410*
Statics *1*
Steering gears
  Ackermann *194, 196*
  Davis *194*
Straight line mechanisms *181*
Structure *7*
Sun and planet gear *394*
Superposition of loads *414*
Superstructure *7*
Swaying couple *493*
Synthesis of mechanisms *144*

Tangential acceleration *80*
Tchebicheff mechanism *187*
Thrust
  along connecting rod *441*
  on bearings *441*
  on sides of cylinder *441*
Torsional system *681*
Torsionally equivalent shaft *668*
Torsional vibrations *659*
  geared system of *671*
  inertia effect of mass *660*
  three-rotor system *667*
  two-rotor system *666*
Trace point *212*
Tractive force *492*
Tractive resistance *554*
Transducer *678*
Transfer function *682*
  open loop *685*
  closed loop *685*
Transmission angle *23*
Transmissibility *644*
Transverse vibrations *650*
  Dunkerley's method *655*
  energy method *655*
  shaft carrying several loads *654*
  single concentrated load *650*
  uniformly-loaded shaft *651*
Turn buckle *260*
Turning pair *4*
Turning-moment diagrams *458*
Turning moment on crankshaft *441*

Unbalance *245*
Unclosed pair *4*
Undercutting
  cam *215*
  gear *361*
Uniform pressure theory *268*
Uniform wear theory *268*
Universal drafting machine *189*
Universal joint *197*

V-belt *311*
Vector approach *62, 111*
Velocity
  Angular *43*
  from displacement curve *111*
  image *42*
  of piston *437, 438*
  of rubbing *43*
  of sliding *343*

ratio *339, 364*
Vibrations *615*
cycle *615*
damped *615, 229*
degree of freedom *617*
free *615*
frequency of *615*
forced *615*
forced damped *638*
isolation *644*
logarithmic decrement *633*
longitudinal *616*
magnification factor *641*
natural *615*
of three-rotor system *667*
of two-rotor system *666*
period of *615*
resonance in *615*
torsional *616*
transmissibility of *644*
transverse *616*
types *616*
Virtual work *426*
V-threads *259*

Watt governor *560*
Watt mechanism *186*
Wedge *264*
Whipping speed *657*
Whirling of shaft *657*
Whirling speed *657*
Whitworth quick return mechanism *27*
Wilson-Hartnell governor *575*
Wind up *245*
Worm gears
axial pitch of *372*
centre distance *372*
efficiency of *373*
lead *372*
lead angle *372*
velocity ratio *372*