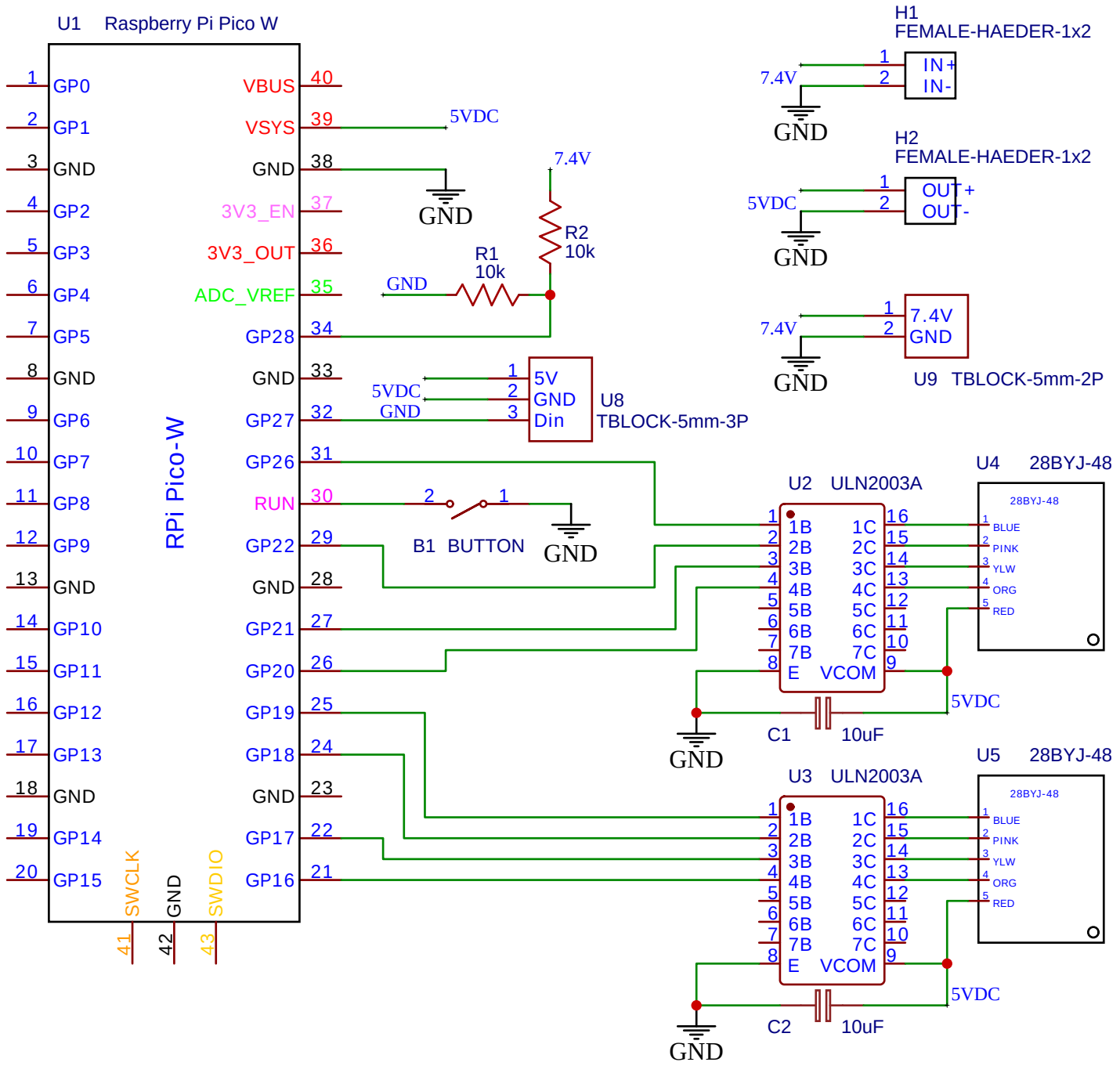

TITLE: MiniMiniRobotlar		REV: 0.1
METU	Company: Xor ve Otesi	Sheet: 1/1
	Date: 2023-04-30 Drawn By: Emir Bahadir Unsal	