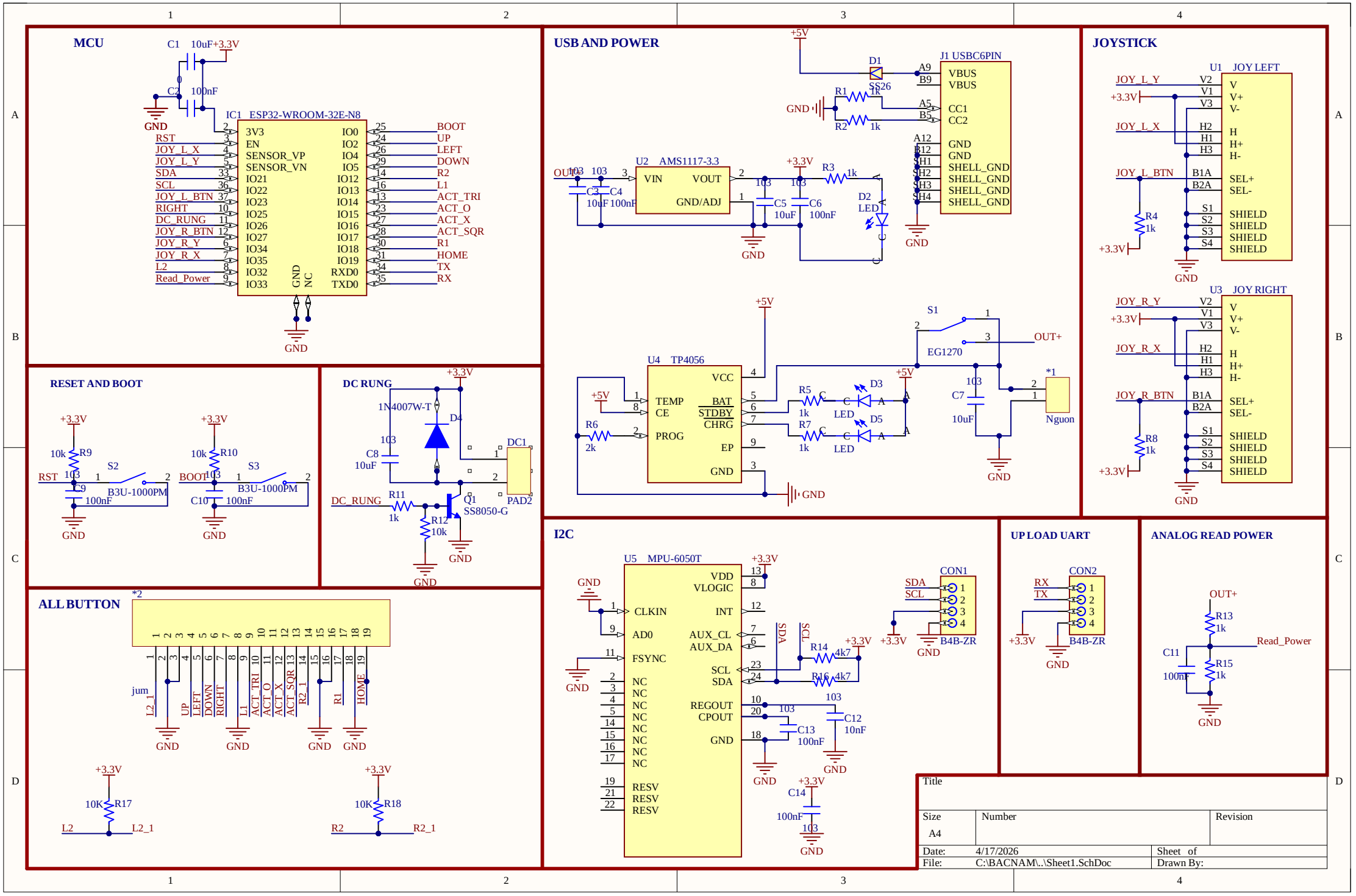
MCU
C1 10uF +3.3V
C2 100nF
GND
IC1 ESP32-WROOM-32E-N8
3V3
EN
SENSOR_VP
SENSOR_VN
IO21
IO22
IO23
IO25
IO26
IO27
IO34
IO35
IO32
IO33
GND
NC
IO0
IO2
IO4
IO5
IO12
IO13
IO14
IO15
IO16
IO17
IO18
IO19
RXD0
TXD0
RST
JOY_L_X
JOY_L_Y
SDA
SCL
JOY_L_BTN
RIGHT
DC_RUNG
JOY_R_BTN
JOY_R_Y
JOY_R_X
L2
Read_Power
BOOT
UP
LEFT
DOWN
R2
L1
ACT_TRI
ACT_O
ACT_X
ACT_SQR
R1
HOME
TX
RX
USB AND POWER
+5V
D1 SS26
J1 USBC6PIN
A9 B9 VBUS
A5 B5 CC1 CC2
A12 B12 GND
A1 B1 GND
A4 B4 SHELL_GND
R1 1k
R2 1k
U2 AMS1117-3.3
VIN
VOUT
GND/ADJ
OUT
C3 10uF
C4 100nF
C5 10uF
C6 100nF
+3.3V
R3 1k
D2 LED
JOYSTICK
U1 JOY LEFT
V V+ V-
H H+ H-
SEL+ SEL-
SHIELD
R4 1k
U3 JOY RIGHT
R8 1k
RESET AND BOOT
R9 10k
R10 10k
S2 B3U-1000PM
S3 B3U-1000PM
C9 100nF
C10 100nF
DC RUNG
1N4007W-T D4
C8 10uF
DC1
PAD2
R11 1k
R12 10k
Q1 SS8050-G
U4 TP4056
VCC
TEMP
CE
BAT
STDBY
CHRG
PROG
EP
R6 2k
R5 1k
R7 1k
D3 LED
D5 LED
S1 EG1270
OUT+
C7 10uF
*1
Nguon
ALL BUTTON
*2
jum
L2_1
R2_1
R17 10K
R18 10K
I2C
U5 MPU-6050T
VDD
VLOGIC
CLKIN
AD0
FSYNC
INT
AUX_CL
AUX_DA
SCL
SDA
REGOUT
CPOUT
RESV
R14 4k7
R16 4k7
C12 10nF
C13 100nF
C14 100nF
CON1
B4B-ZR
UP LOAD UART
CON2
ANALOG READ POWER
R13 1k
R15 1k
C11 100nF
Read_Power
Title
Size A4
Number
Revision
Date: 4/17/2026
File: C:\BACNAM\..\Sheet1.SchDoc
Sheet of
Drawn By:

IC1
J1
*1
R16
R17
J2
R12
R14
C14
J3
R11
C8
D5
U4
R6
U5
Q1
R7
R5
C12
C13
J5
U3
U1
R8
R4
J4
R13
R15
C9
D3
D4
D2
R10
C10
R3
S3
S1
S2

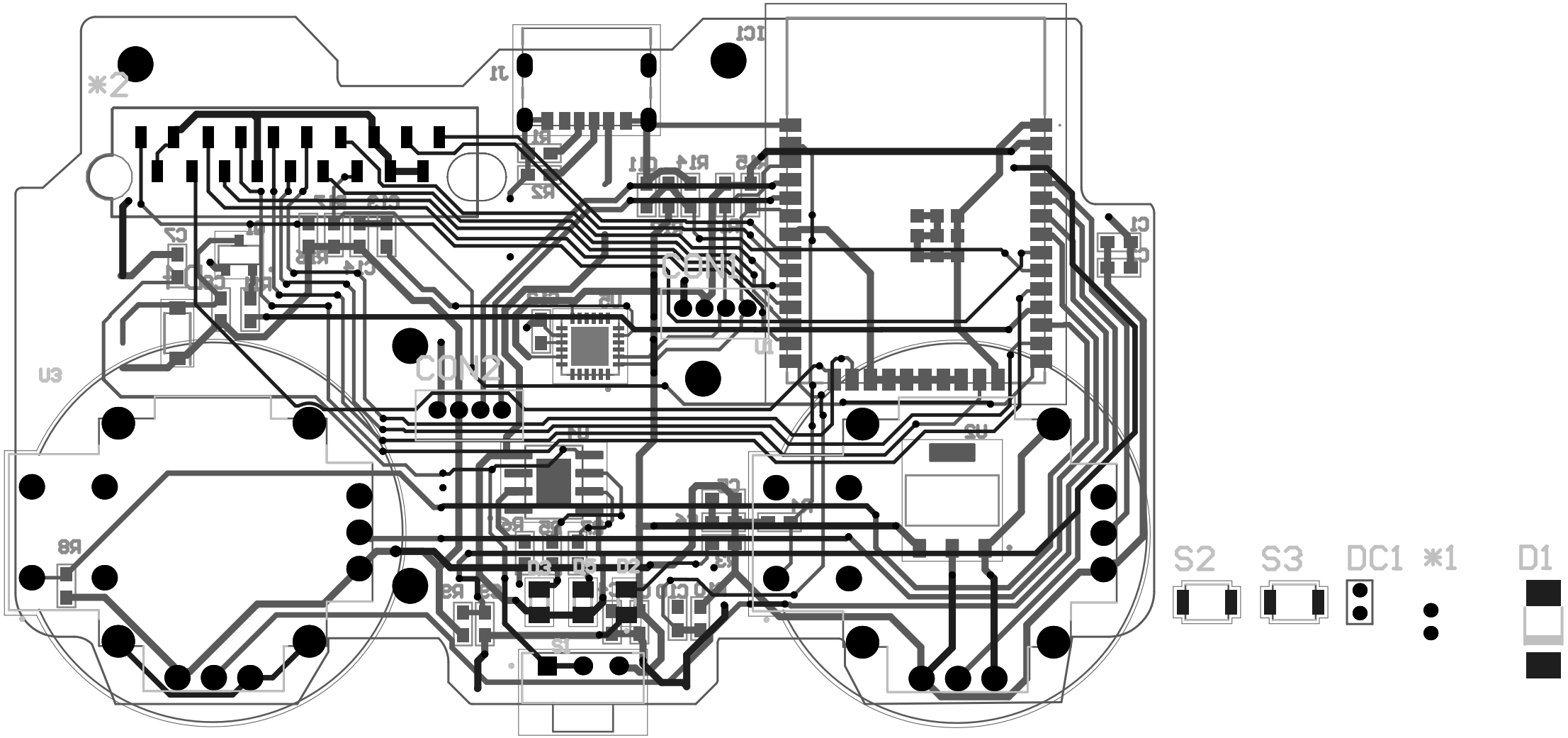
CON2
CON1
S2
S3
DC1
*1
D1

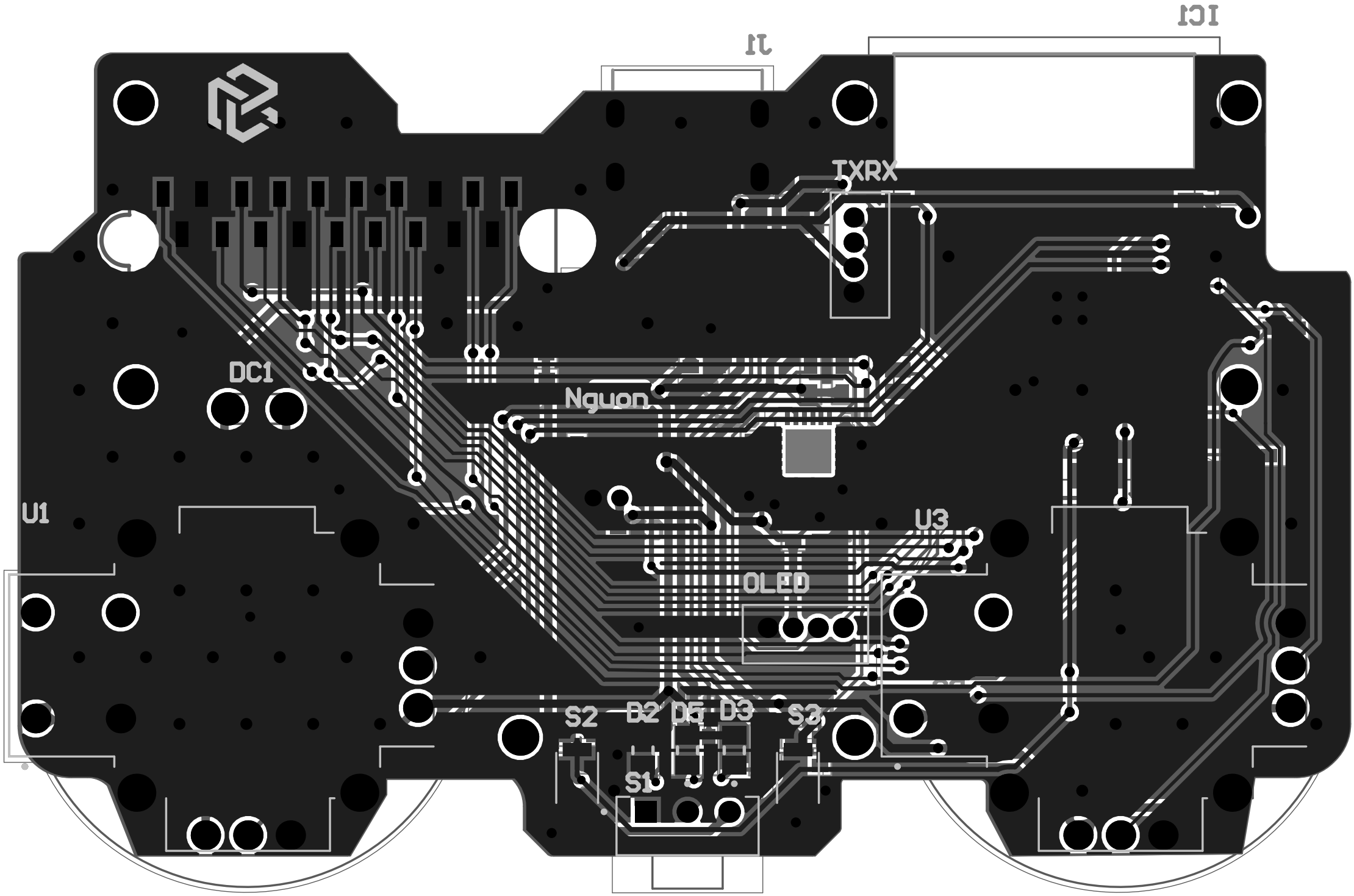
J1
IC1
TXRX
DC1
Nguon
U1
U3
OLED
S2
D2
D5
D3
S3
S1

Comment	Description	Designator	Footprint	LibRef	Quantity
Nguon		*1	PCBComponent_1	Component_1	1
jum		*2	jum	jum	1
10uF	Cap SMD	C1, C3, C5, C7, C8	0603	CM	5
100nF	Cap SMD	C2, C4, C6, C9, C10, C11, C13, C14	0603	CM	8
10nF	Cap SMD	C12	0603	CM	1
B4B-ZR	Connector Header Surface Mount 4 position 0.059 (1.50mm)	CON1, CON2	B4B-ZR	B4B-ZR	2
SS26	Schottkydiod 2 A 60 V DO-214AA%3DSMB | Vishay SS26 @ Schottkydioder (Schottkydiod 2 A 60 V DO-214AA%3DSMB Dioder / SmÃ¥signals Schottky-dioder)	D1	SS26	SS26	1
LED	LED Uni-Color Green 4-Pin Chip 0805 T/R	D2, D3, D5	LEDC2012X70N	597-3305-607F	3
1N4007W-T	Diode Standard 1000 V 1A Surface Mount SOD-123F	D4	SODFL3818X130N	1N4007W-T	1
PAD2		DC1	PAD2	PAD2	1
ESP32-WROOM-32E-N8	Bluetooth, WiFi 802.11b/g/n, Bluetooth v4.2 +EDR, Class 1, 2 and 3 Transceiver Module 2.4GHz ~ 2.5GHz PCB Trace Surface Mount	IC1	ESP32WROOM32EN8	ESP32-WROOM-32E-N8	1
USBC6PIN	Type C USB Charging Connector	J1	GCT_USB4970-00-A_REVA	USB4970-00-A_REVA	1
SS8050-G	Bipolar (BJT) Transistor NPN 25 V 1.5 A 100MHz 300 mW Surface Mount SOT-23-3	Q1	TRANS_SS8050-G	SS8050-G	1
1k	Resistor 1/4W	R1, R2, R3, R4, R5, R7, R8, R11, R13, R15	0603	R	10
2k	Resistor 1/4W	R6	0603	R	1
10k	Resistor 1/4W	R9, R10, R12, R17, R18	0603	R	5
4k7	Resistor 1/4W	R14, R16	0603	R	2
EG1270	Slide Switch, EG Series, SPDT, Non-Shorting, ON-ON, 300mA DC, 6VDC, R/A, PC | E-Switch EG1270	S1	SW_EG1270	EG1270	1
B3U-1000PM	Top, w/o Boss 1k Reel | Omron Electronic Components B3U-1000PM	S2, S3	SW_B3U-1000PM	B3U-1000PM	2
JOY LEFT	Thumb Joystick	U1	XDCR_COM-09032	COM-09032	1
AMS1117-3.3	1A LOW DROPOUT VOLTAGE REGULATOR	U2	SOT229P700X180-4N	AMS1117-5.0	1
JOY RIGHT	Thumb Joystick	U3	XDCR_COM-09032	COM-09032	1
TP4056	Complete single cell Li-Ion battery with a constant current / constant voltage linear charger	U4	SOP127P600X175-9N	TP4056	1
MPU-6050T	3-Axis Gyro+3-Axis Accelerometer	U5	QFN50P400X400X95-24N	MPU-6050T	1