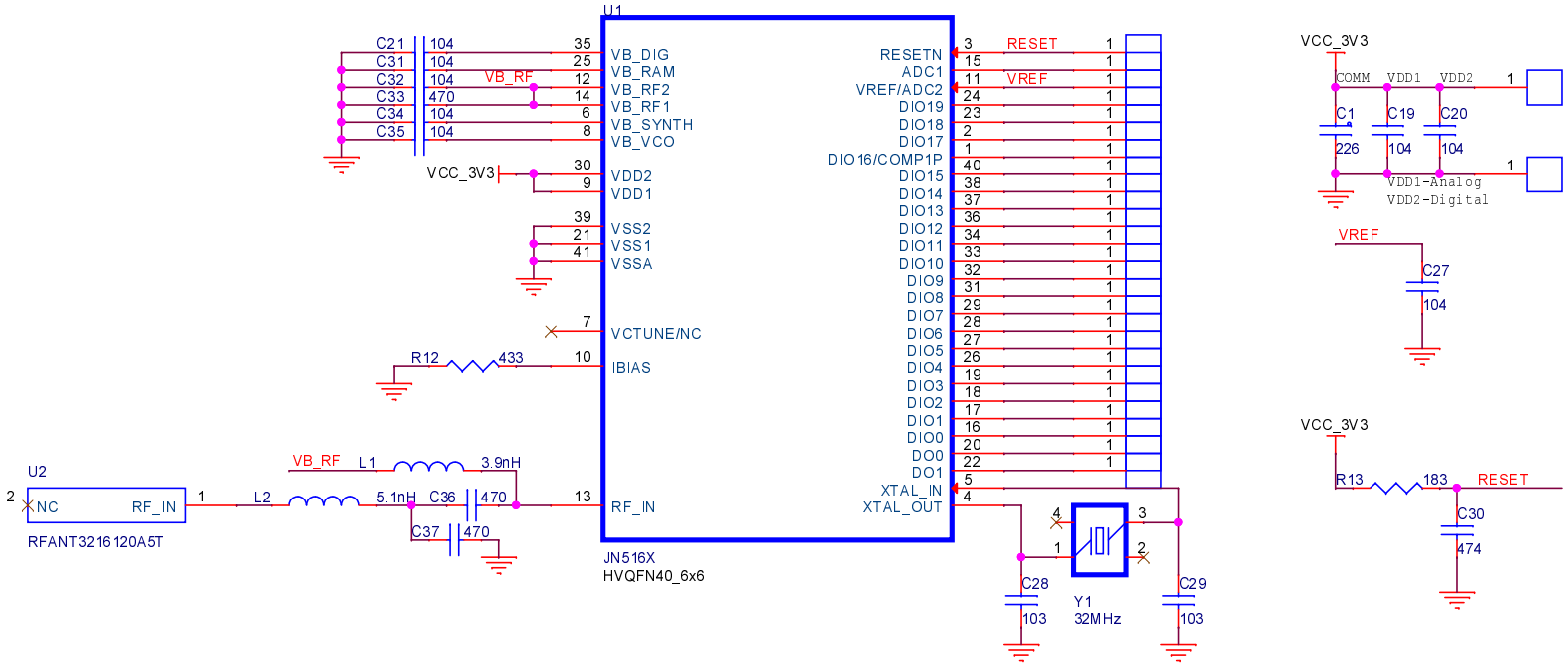

Title <Title>		
Size A4	Document Number <Doc>	Rev <RevCod
Date: Sunday, May 21, 2017	Sheet 1 of 1	