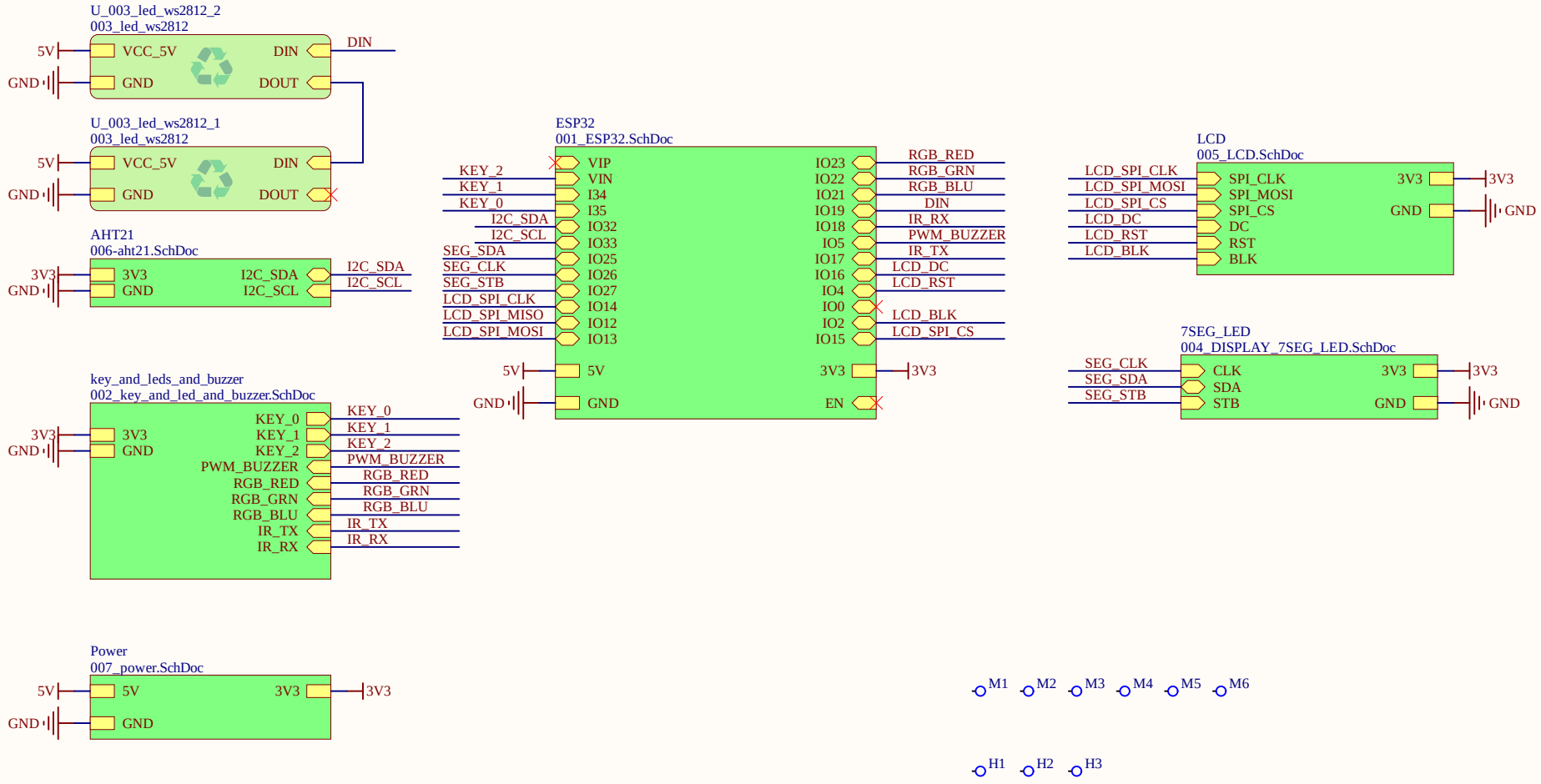

Title			*Altium Limited* *L3, 12a Rodborough Rd* *Frenchs Forest* *NSW* *Australia 2086*
Size: A4	Number:	Revision:	
Date: 2021/8/31	Time: 19:46:36	Sheet 1 of 8	
File: D:\workspace\AD_WS\wifi_clock\100_WiFi_clock.SchDoc			

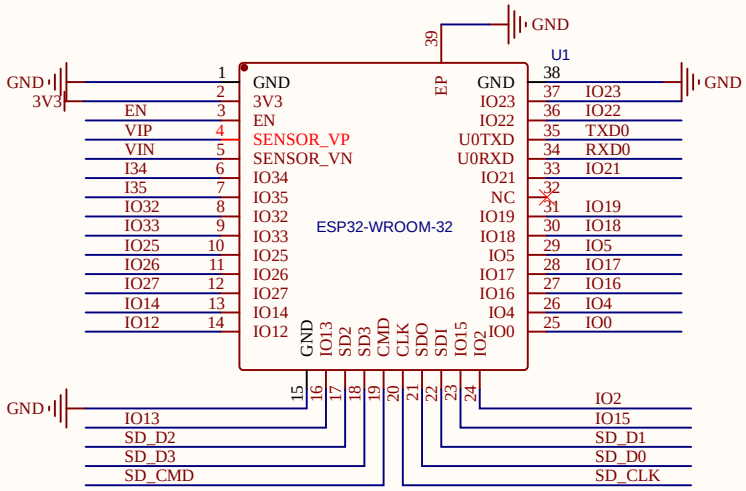

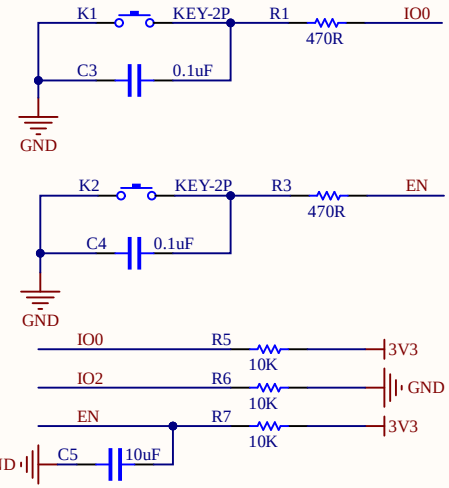

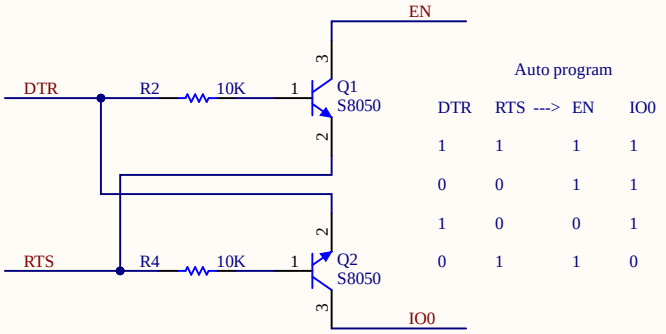

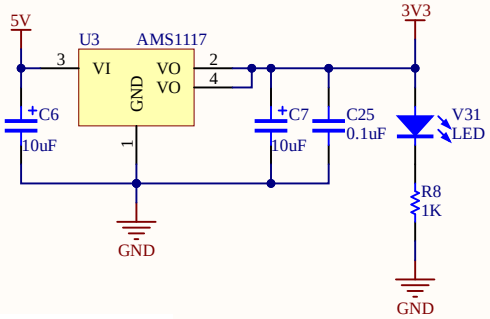

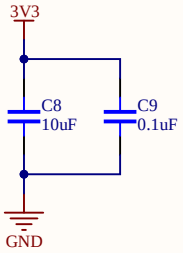

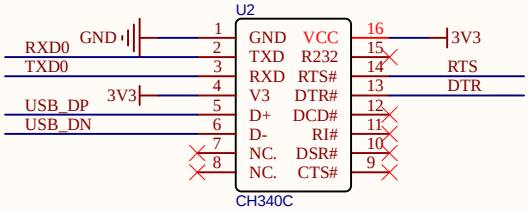

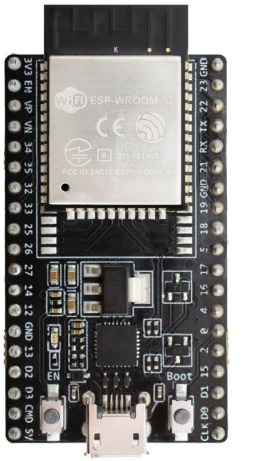

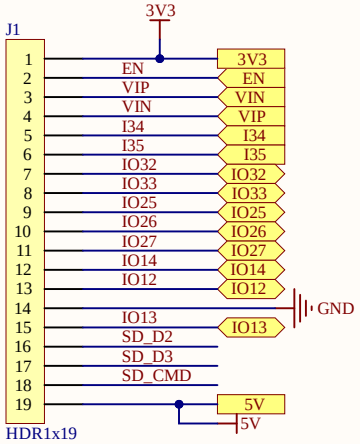

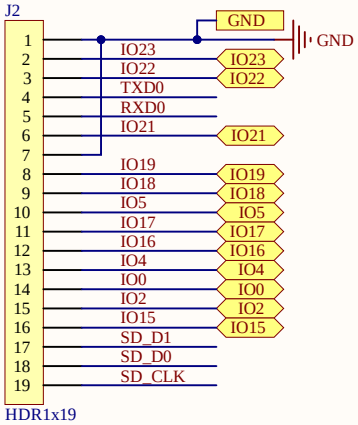

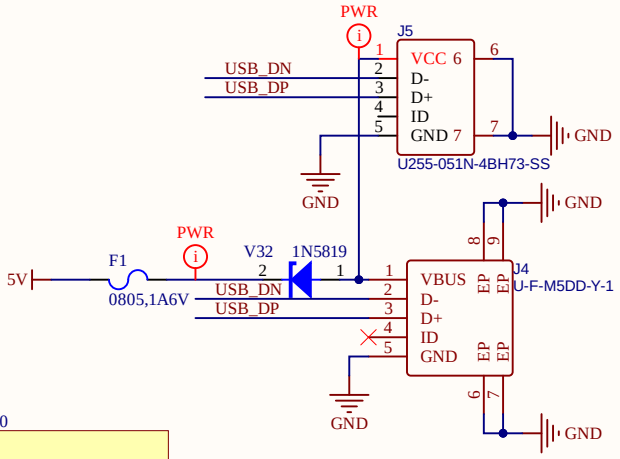

Title			*Altium Limited* *L3, 12a Rodborough Rd* *Frenchs Forest* *NSW* *Australia 2086*
Size: A4	Number:	Revision:	
Date: 2021/8/31	Time: 19:46:36	Sheet 2 of 8	
File: D:\workspace\AD_WS\wifi_clock\001_ESP32.SchDoc			

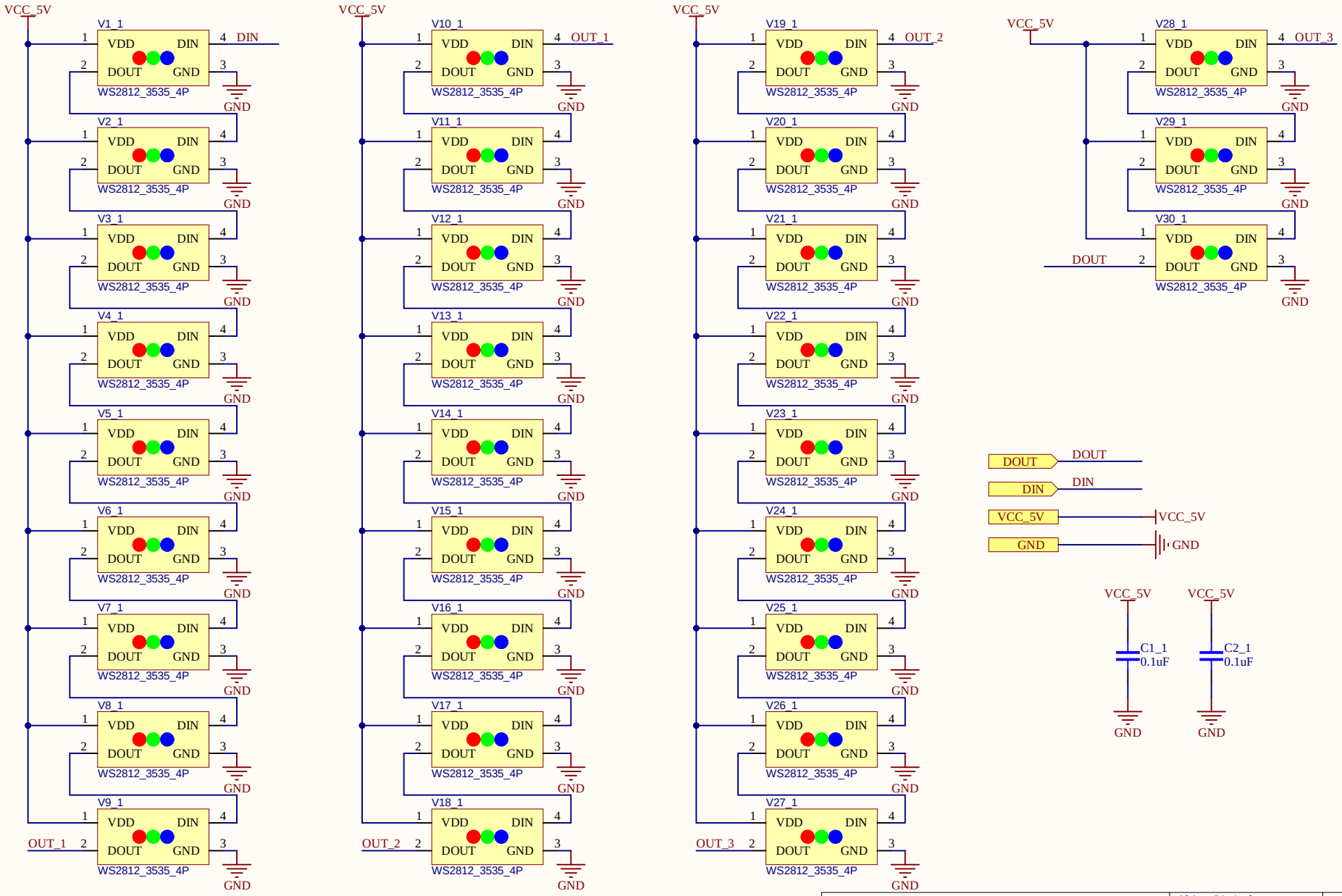

Title			Altium Limited L3, 12a Rodborough Rd Frenchs Forest NSW Australia 2086
Size: A4	Number:	Revision:	
Date: 2021/8/31 Time: 19:46:37	Sheet 3 of 8		
File: D:\workspace\AD_WS\wifi_clock\003_led_ws2812.SchDoc			

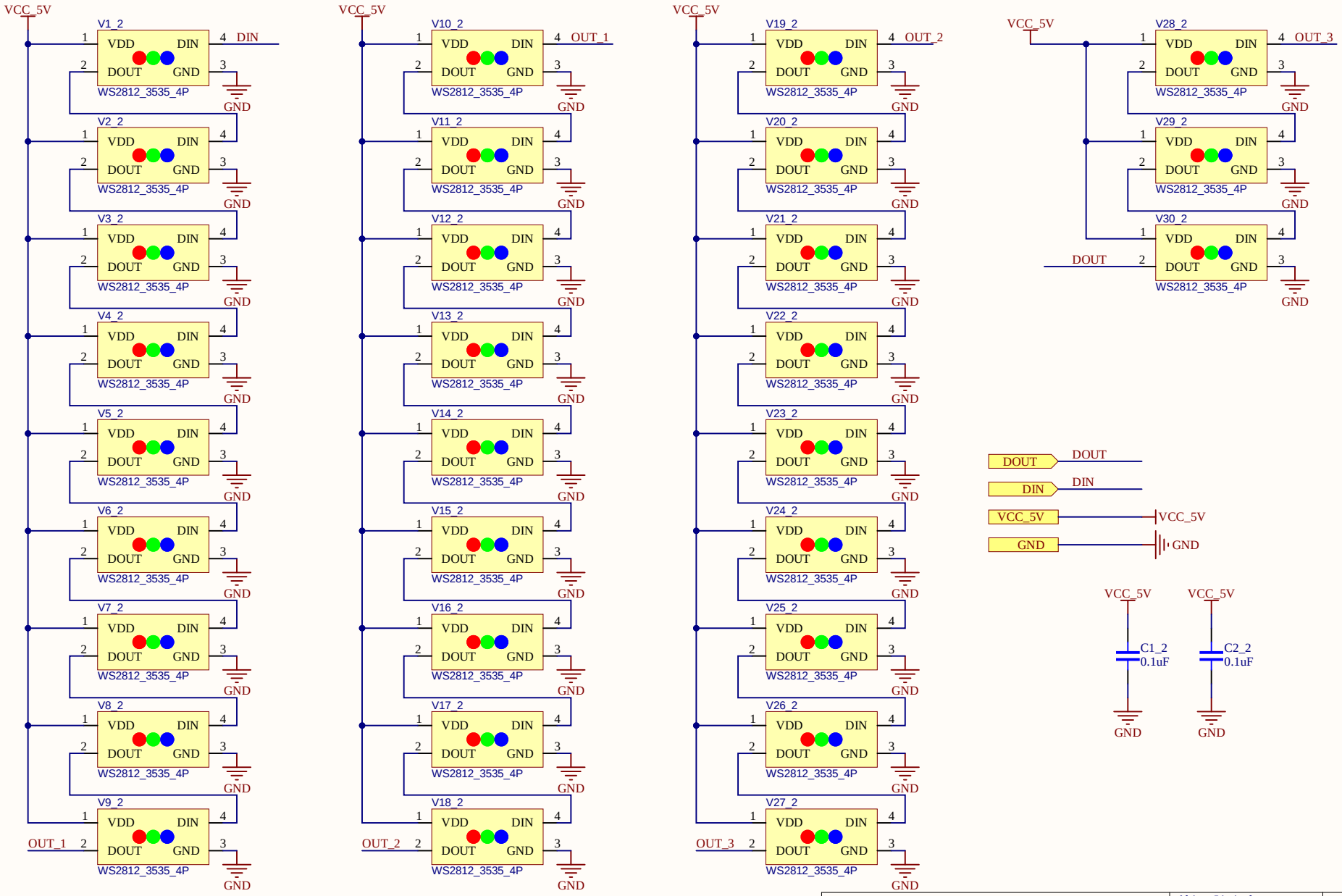

Title			Altium Limited L3, 12a Rodborough Rd Frenchs Forest NSW Australia 2086
Size: A4	Number:	Revision:	
Date: 2021/8/31	Time: 19:46:37	Sheet 3 of 8	
File: D:\workspace\AD_WS\wifi_clock\003_led_ws2812.SchDoc			

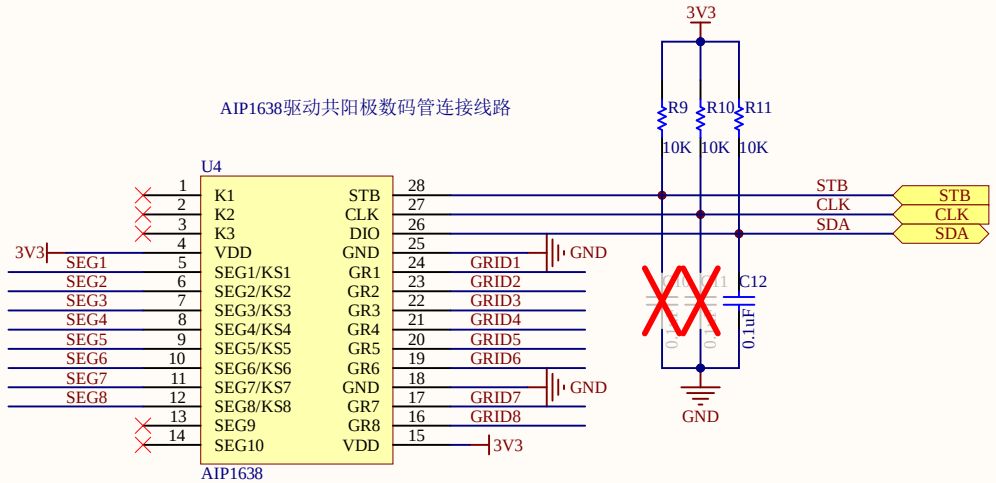

Title			Altium Limited L3, 12a Rodborough Rd Frenchs Forest NSW Australia 2086
Size: A4	Number:	Revision:	
Date: 2021/8/31	Time: 19:46:37	Sheet 4 of 8	
File: D:\workspace\AD_WS\wifi_clock\004_DISPLAY_7SEG_LED.SchDoc			

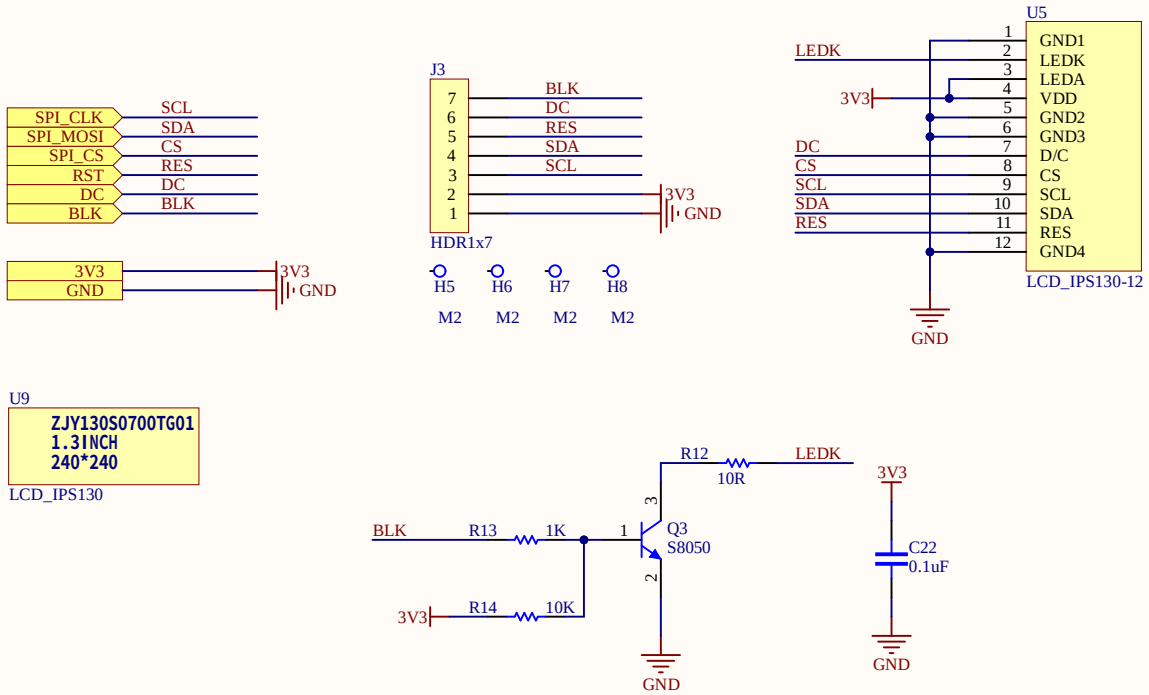

Title			*Altium Limited* *L3, 12a Rodborough Rd* *Frenchs Forest* *NSW* *Australia 2086*
Size: A4	Number:	Revision:	
Date: 2021/8/31	Time: 19:46:37	Sheet 5 of 8	
File: D:\workspace\AD_WS\wifi_clock\005_LCD.SchDoc			

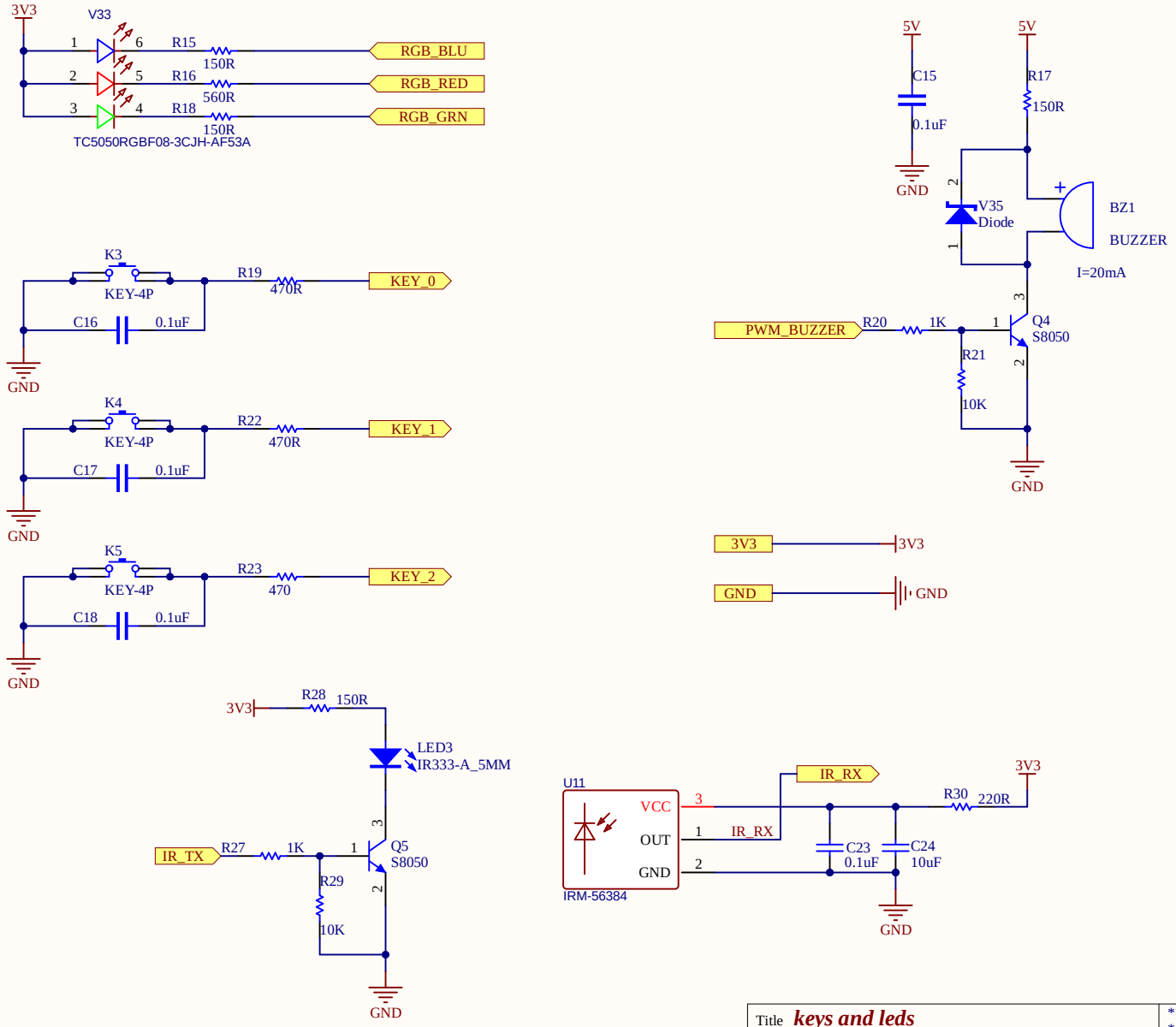

Title	***keys and leds***		
Size: A4	Number: *	Revision: 0.1	
Date: 2021/8/31	Time: 19:46:37	Sheet 6 of 8	
File: D:\workspace\AD_WS\wifi_clock\002_key_and_led_and_buzzer.SchDoc			

Altium

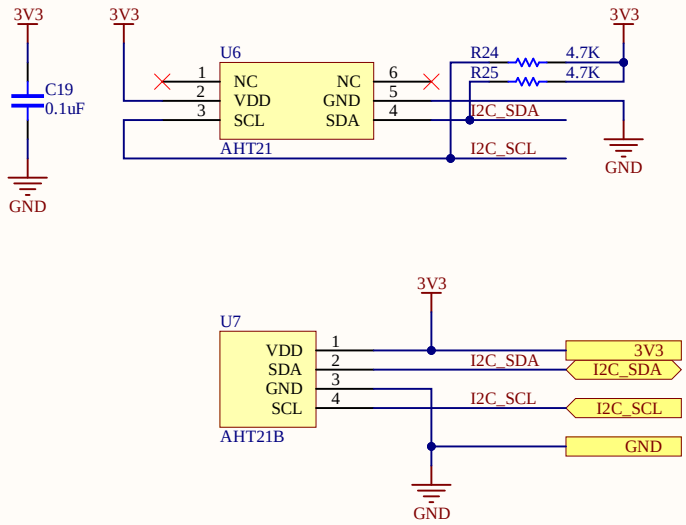

Title	***Temperature and Humidity***		*NEUI*
Size: A4	Number: 001	Revision: V0.1	
Date: 2021/8/31	Time: 19:46:37	Sheet 7 of 8	
File: D:\workspace\AD_WS\wifi_clock\006-aht21.SchDoc			

Todo:

锂电池供电电路
充电电路
放电电路

DC-DC代替LDO

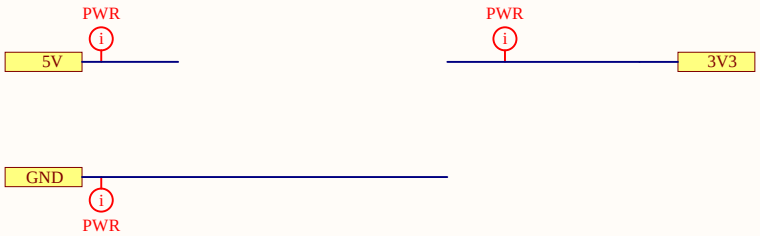

Title			Altium Limited L3, 12a Rodborough Rd Frenchs Forest NSW Australia 2086
Size: A4	Number:	Revision:	
Date: 2021/8/31 Time: 19:46:37		Sheet 8 of 8	
File: D:\workspace\AD_WS\wifi_clock\007_power.SchDoc			

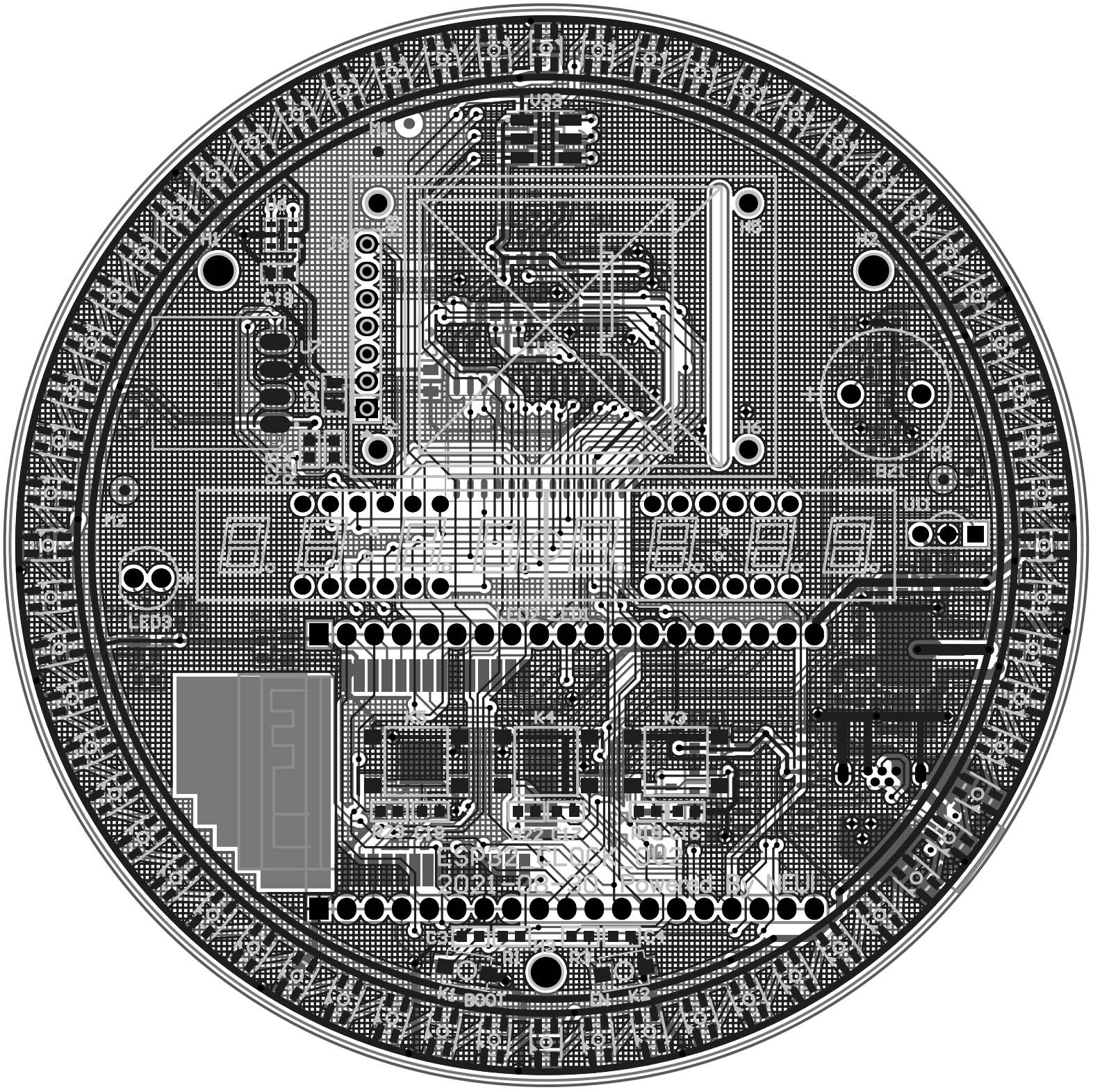
ESP32 CLOCK NO.1
2021-08-10 Powered by NEU

Comment	Description	Designator	Footprint	LibRef	Quantity
BUZZER	Buzzer	BZ1	BUZZER-D12.0X8.5-6.5-0.8	BUZZER	1
0.1uF	Capacitor	C1_1, C1_2, C2_1, C2_2, C3, C4, C9, C12, C13, C15, C16, C17, C18, C19, C23, C25	C0603	CAP, CAP_1	16
10uF	Capacitor	C5, C8, C14, C24	C0805	CAP, CAP_1	4
10uF	Tantalum Capacitor	C6, C7	CASE-A_3216_1206	CAP-TANTALUM	2
0.1uF	Capacitor	C22	C0805	CAP	1
0805,1A6V		F1	F0805	FUSE	1
MH	Mounting Hole	H1, H2, H3	MH-3.1_noplat	MH	3
M2	Mounting Hole	H5, H6, H7, H8	MH-2.2_noplat	MH	4
HDR1x19	Connector	J1, J2	PIN-19-2.54-1.0	HDR1x19	2
HDR1x7	Connector	J3	PIN-7-2.54-1.0	HDR1x7	1
U-F-M5DD-Y-1		J4	MICRO-USB-SMD_MICRO-QTZB5.0	U-F-M5DD-Y-1	1
U255-051N-4BH73-SS		J5	MICRO-USB-TH_U255-051N-4BH73	USB_7P	1
KEY-2P	Key	K1, K2	KEY-SMD_L4.0-W2.9-LS5.0	KEY-2P	2
KEY-4P	Key	K3, K4, K5	KEY_SMD_4P-L6-W6	KEY-4P	3
LED-7SEGx4_CLK	LED Display	LED1, LED2	LED-7SEGx4-0R28INCH-12P	LED-8SEGx4_CLK	2
IR333-A_5MM	LED	LED3	LED-D5	LED	1
	Mark	M1	MARK	MARK	1
MARK	Mark	M2, M3, M4, M5, M6	MARK	MARK	5
S8050	NPN General Purpose Amplifier	Q1, Q2, Q3, Q4, Q5	SOT-23	NPN	5
470R	Resistor	R1, R3, R19, R22	0603	Res1	4
10K	Resistor	R2, R4, R5, R6, R7, R9, R10, R11, R14, R21, R29	0603	Res1	11
1K	Resistor	R8, R13, R20, R27	0603	Res1	4
10R	Resistor	R12	0603	Res1	1
150R	Resistor	R15, R17, R18, R28	0603	Res1	4
560R	Resistor	R16	0603	Res1	1
470	Resistor	R23	0603	Res1	1
4.7K	Resistor	R24, R25	0603	Res1	2
220R	Resistor	R30	0603	Res1	1
ESP32-WROOM-32		U1	ESP32-WROOM-32	ESP32-WROOM-32	1
CH340C		U2	SOP-16_150MIL	CH340C	1
AMS1117	IC	U3	SOT-223	AMS1117	1
AIP1638	LED驱动	U4	SOP-28_300mil	TM1638_[C19187]	1
LCD_IPS130-12	LCD	U5	FPC_SOLDER_0R7_12P	LCD_IPS130-12	1
AHT21	IC	U6	SENSOR-SMD_L3.0-W3.0-P1.00-BL	AHT21	1
AHT21B	IC	U7	AHT21B	AHT21B	1
LCD_IPS130	LCD	U9	LCD_1.30INCH_ZJY130S0700TG01	LCD_IPS130	1
ESP32-DevKitC	LCD	U10	ESP32-DevKitC	ESP32-DevKitC	1
IRM-56384	IC	U11	TH_IR_RX	IR_RX	1
WS2812_3535_4P	V	V1_1, V1_2, V2_1, V2_2, V3_1, V3_2, V4_1, V4_2, V5_1, V5_2, V6_1, V6_2, V7_1, V7_2, V8_1, V8_2, V9_1, V9_2, V10_1, V10_2, V11_1, V11_2, V12_1, V12_2, V13_1, V13_2, V14_1, V14_2, V15_1, V15_2, V16_1, V16_2, V17_1, V17_2, V18_1, V18_2, V19_1, V19_2, V20_1, V20_2, V21_1, V21_2, V22_1, V22_2, V23_1, V23_2, V24_1, V24_2, V25_1, V25_2, V26_1, V26_2, V27_1, V27_2, V28_1, V28_2, V29_1, V29_2, V30_1, V30_2	LED-SMD_4P-3528	LED_RGB_4P_WS2812	60
LED	LED	V31	LED-0603	LED	1
1N5819	Zener Diode	V32	SOD-123	Diode	1
TC5050RGBF08-3CJH-AF53A	V	V33	LED-SMD_6P-5050	LED_RGB_6P_1P	1
Diode	Zener Diode	V35	SOD-123	Diode_1	1