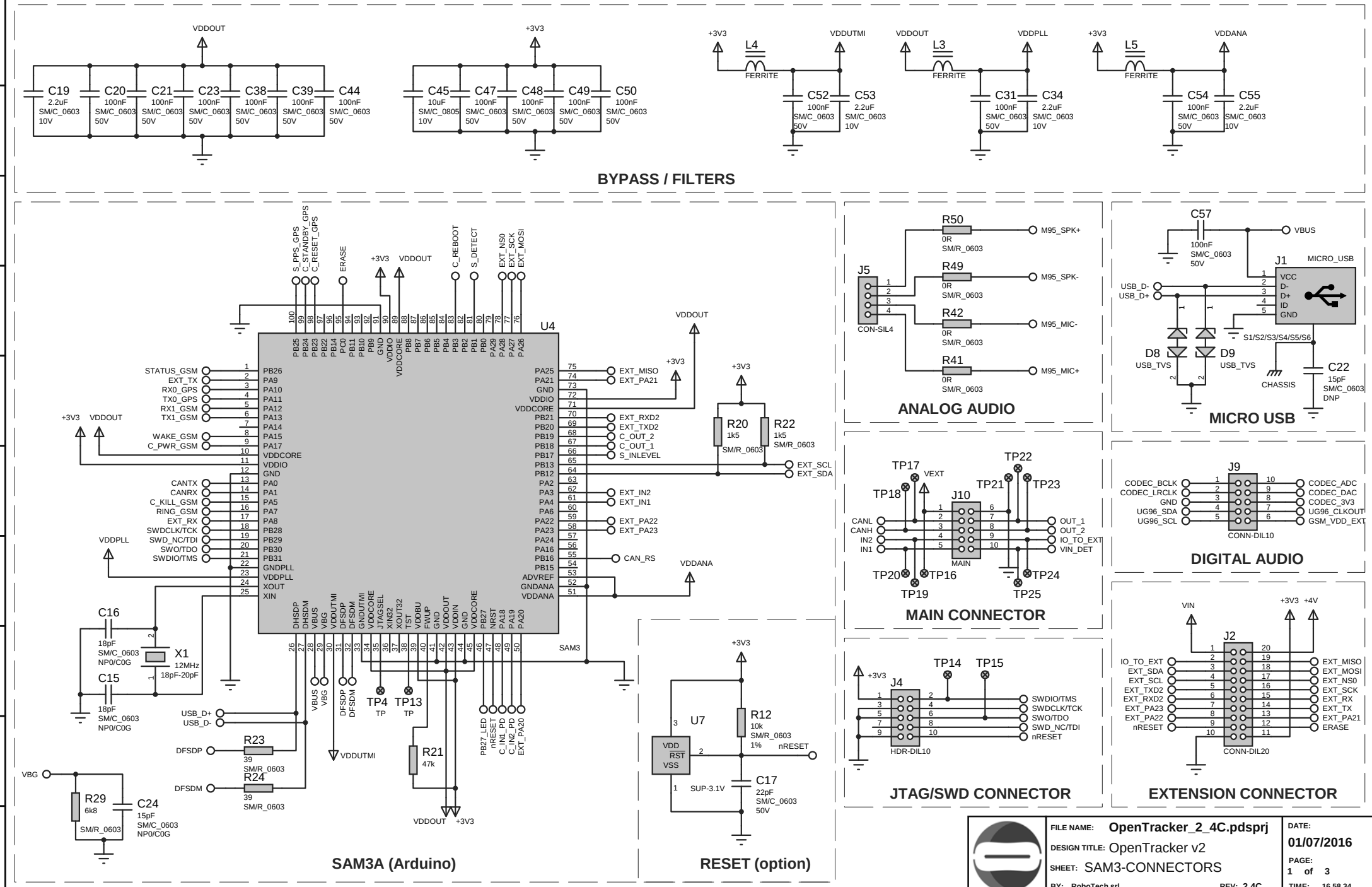
BYPASS / FILTERS
VDDOUT
+3V3
C19 2.2uF SM/C_0603 10V
C20 100nF SM/C_0603 50V
C21 100nF SM/C_0603 50V
C23 100nF SM/C_0603 50V
C38 100nF SM/C_0603 50V
C39 100nF SM/C_0603 50V
C44 100nF SM/C_0603 50V
C45 10uF SM/C_0805 10V
C47 100nF SM/C_0603 50V
C48 100nF SM/C_0603 50V
C49 100nF SM/C_0603 50V
C50 100nF SM/C_0603 50V
L4 FERRITE
VDDUTMI
C52 100nF SM/C_0603 50V
C53 2.2uF SM/C_0603 10V
L3 FERRITE
VDDPLL
C31 100nF SM/C_0603 50V
C34 2.2uF SM/C_0603 10V
L5 FERRITE
VDDANA
C54 100nF SM/C_0603 50V
C55 2.2uF SM/C_0603 10V
U4
SAM3
STATUS_GSM
EXT_TX
RX0_GPS
TX0_GPS
RX1_GSM
TX1_GSM
WAKE_GSM
C_PWR_GSM
CANTX
CANRX
C_KILL_GSM
RING_GSM
EXT_RX
SWDCLK/TCK
SWD_NC/TDI
SWO/TDO
SWDIO/TMS
EXT_MISO
EXT_PA21
EXT_RXD2
EXT_TXD2
C_OUT_2
C_OUT_1
S_INLEVEL
EXT_SCL
EXT_SDA
EXT_IN2
EXT_IN1
EXT_PA22
EXT_PA23
CAN_RS
R20 1k5 SM/R_0603
R22 1k5 SM/R_0603
C16 18pF SM/C_0603 NP0/C0G
X1 12MHz 18pF-20pF
C15 18pF SM/C_0603 NP0/C0G
USB_D+
USB_D-
DFSDP
DFSDM
R23 39 SM/R_0603
R24 39 SM/R_0603
VBG
R29 6k8 SM/R_0603
C24 15pF SM/C_0603 NP0/C0G
TP4 TP
TP13 TP
R21 47k
VDDUTMI
PB27_LED
nRESET
C_IN1_PD
C_IN2_PD
EXT_PA20
SAM3A (Arduino)
U7
VDD
RST
VSS
SUP-3.1V
R12 10k SM/R_0603 1%
nRESET
C17 22pF SM/C_0603 50V
RESET (option)
R50 0R SM/R_0603
R49 0R SM/R_0603
R42 0R SM/R_0603
R41 0R SM/R_0603
M95_SPK+
M95_SPK-
M95_MIC-
M95_MIC+
J5
CON-SIL4
ANALOG AUDIO
C57 100nF SM/C_0603 50V
VBUS
J1
MICRO_USB
VCC
D-
D+
ID
GND
S1/S2/S3/S4/S5/S6
D8 USB_TVS
D9 USB_TVS
CHASSIS
C22 15pF SM/C_0603 DNP
MICRO USB
TP17
TP18
TP20
TP19
TP16
TP22
TP21
TP23
TP24
TP25
VEXT
J10
MAIN
CANL
CANH
IN2
IN1
OUT_1
OUT_2
IO_TO_EXT
VIN_DET
MAIN CONNECTOR
J9
CONN-DIL10
CODEC_BCLK
CODEC_LRCLK
GND
UG96_SDA
UG96_SCL
CODEC_ADC
CODEC_DAC
CODEC_3V3
UG96_CLKOUT
GSM_VDD_EXT
DIGITAL AUDIO
J4
HDR-DIL10
TP14
TP15
SWDIO/TMS
SWDCLK/TCK
SWO/TDO
SWD_NC/TDI
nRESET
JTAG/SWD CONNECTOR
VIN
+3V3
+4V
J2
CONN-DIL20
IO_TO_EXT
EXT_SDA
EXT_SCL
EXT_TXD2
EXT_RXD2
EXT_PA23
EXT_PA22
nRESET
EXT_MISO
EXT_MOSI
EXT_NS0
EXT_SCK
EXT_RX
EXT_TX
EXT_PA21
ERASE
EXTENSION CONNECTOR
FILE NAME: OpenTracker_2_4C.pdsprj
DESIGN TITLE: OpenTracker v2
SHEET: SAM3-CONNECTORS
BY: RoboTech srl
REV: 2.4C
DATE: 01/07/2016
PAGE: 1 of 3
TIME: 16.58.34

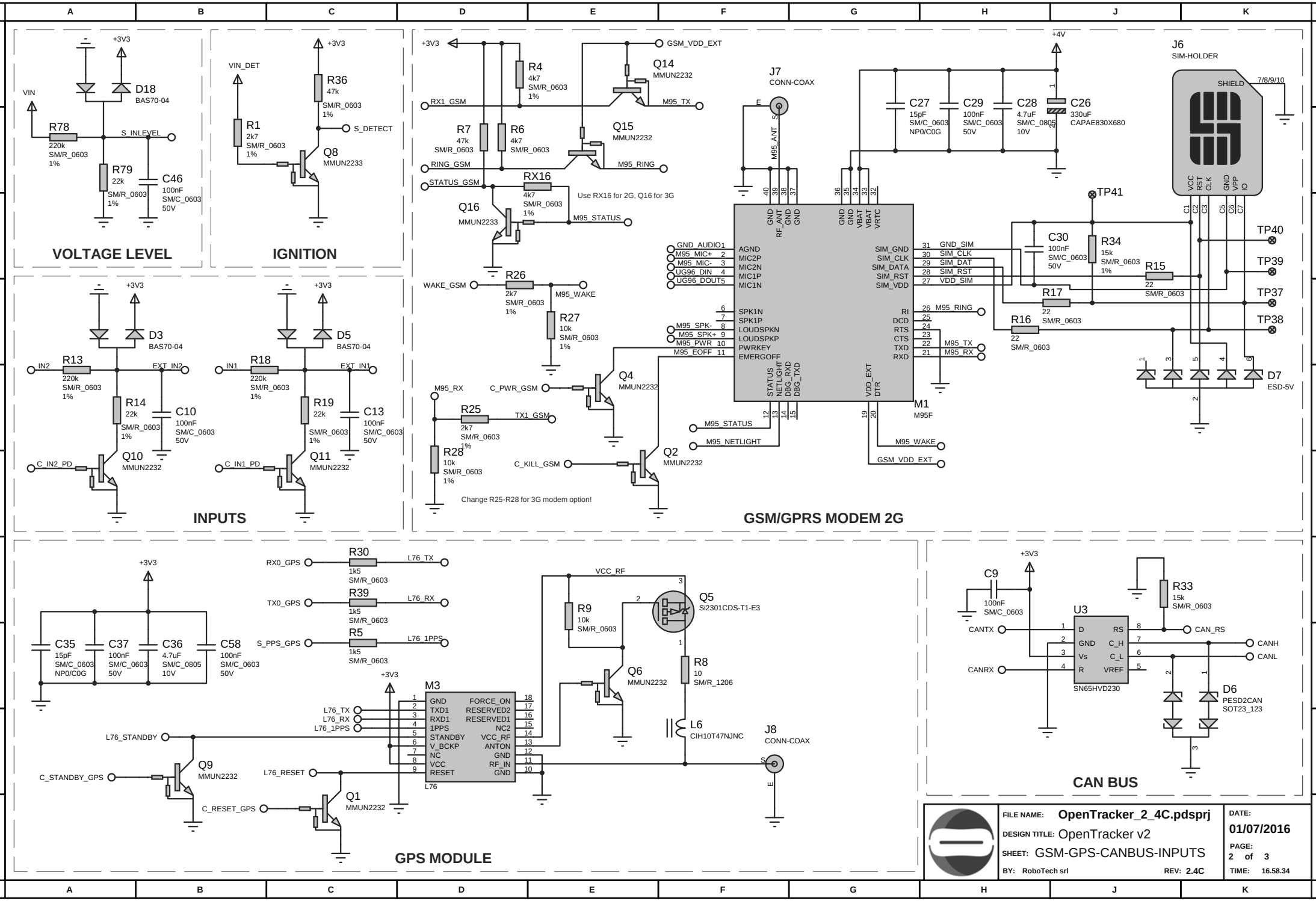
VOLTAGE LEVEL
+3V3
VIN
D18
BAS70-04
R78
220k
SM/R_0603
1%
S_INLEVEL
R79
22k
SM/R_0603
1%
C46
100nF
SM/C_0603
50V
IGNITION
VIN_DET
R36
47k
SM/R_0603
1%
S_DETECT
R1
2k7
SM/R_0603
1%
Q8
MMUN2233
INPUTS
D3
BAS70-04
IN2
R13
220k
SM/R_0603
1%
EXT_IN2
R14
22k
SM/R_0603
1%
C10
100nF
SM/C_0603
50V
C_IN2_PD
Q10
MMUN2232
D5
BAS70-04
IN1
R18
220k
SM/R_0603
1%
EXT_IN1
R19
22k
SM/R_0603
1%
C13
100nF
SM/C_0603
50V
C_IN1_PD
Q11
MMUN2232
GSM/GPRS MODEM 2G
GSM_VDD_EXT
R4
4k7
SM/R_0603
1%
Q14
MMUN2232
RX1_GSM
M95_TX
R7
47k
SM/R_0603
R6
4k7
SM/R_0603
Q15
MMUN2232
RING_GSM
M95_RING
STATUS_GSM
RX16
4k7
SM/R_0603
1%
Use RX16 for 2G, Q16 for 3G
Q16
MMUN2233
M95_STATUS
WAKE_GSM
R26
2k7
SM/R_0603
1%
M95_WAKE
R27
10k
SM/R_0603
1%
M95_RX
C_PWR_GSM
Q4
MMUN2232
R25
2k7
SM/R_0603
1%
TX1_GSM
R28
10k
SM/R_0603
1%
C_KILL_GSM
Q2
MMUN2232
Change R25-R28 for 3G modem option!
J7
CONN-COAX
M95_ANT
+4V
C27
15pF
SM/C_0603
NP0/C0G
C29
100nF
SM/C_0603
50V
C28
4.7uF
SM/C_0805
10V
C26
330uF
CAPAE830X680
J6
SIM-HOLDER
SHIELD
7/8/9/10
VCC
RST
CLK
GND
VPP
IO
TP41
TP40
TP39
TP37
TP38
C30
100nF
SM/C_0603
50V
R34
15k
SM/R_0603
1%
R15
22
SM/R_0603
R17
22
SM/R_0603
R16
22
SM/R_0603
D7
ESD-5V
GND_AUDIO
M95_MIC+
M95_MIC-
UG96_DIN
UG96_DOUT
AGND
MIC2P
MIC2N
MIC1P
MIC1N
SPK1N
SPK1P
LOUDSPKN
LOUDSPKP
PWRKEY
EMERGOFF
M95_SPK-
M95_SPK+
M95_PWR
M95_EOFF
STATUS
NETLIGHT
DBG_RXD
DBG_TXD
VDD_EXT
DTR
SIM_GND
SIM_CLK
SIM_DATA
SIM_RST
SIM_VDD
RI
DCD
RTS
CTS
TXD
RXD
GND
RF_ANT
VBAT
VRTC
GND_SIM
SIM_CLK
SIM_DAT
SIM_RST
VDD_SIM
M95_RING
M95_TX
M95_RX
M1
M95F
M95_STATUS
M95_NETLIGHT
M95_WAKE
GSM_VDD_EXT
GPS MODULE
RX0_GPS
R30
1k5
SM/R_0603
L76_TX
TX0_GPS
R39
1k5
SM/R_0603
L76_RX
S_PPS_GPS
R5
1k5
SM/R_0603
L76_1PPS
C35
15pF
SM/C_0603
NP0/C0G
C37
100nF
SM/C_0603
50V
C36
4.7uF
SM/C_0805
10V
C58
100nF
SM/C_0603
50V
M3
GND
TXD1
RXD1
1PPS
STANDBY
V_BCKP
NC
VCC
RESET
FORCE_ON
RESERVED2
RESERVED1
NC2
VCC_RF
ANTON
GND
RF_IN
GND
L76
L76_STANDBY
C_STANDBY_GPS
Q9
MMUN2232
L76_RESET
C_RESET_GPS
Q1
MMUN2232
VCC_RF
R9
10k
SM/R_0603
Q5
Si2301CDS-T1-E3
Q6
MMUN2232
R8
10
SM/R_1206
L6
CIH10T47NJNC
J8
CONN-COAX
CAN BUS
C9
100nF
SM/C_0603
R33
15k
SM/R_0603
U3
CANTX
CANRX
D
GND
Vs
R
RS
C_H
C_L
VREF
SN65HVD230
CAN_RS
CANH
CANL
D6
PESD2CAN
SOT23_123
FILE NAME: OpenTracker_2_4C.pdsprj
DESIGN TITLE: OpenTracker v2
SHEET: GSM-GPS-CANBUS-INPUTS
BY: RoboTech srl
REV: 2.4C
DATE: 01/07/2016
PAGE: 2 of 3
TIME: 16.58.34

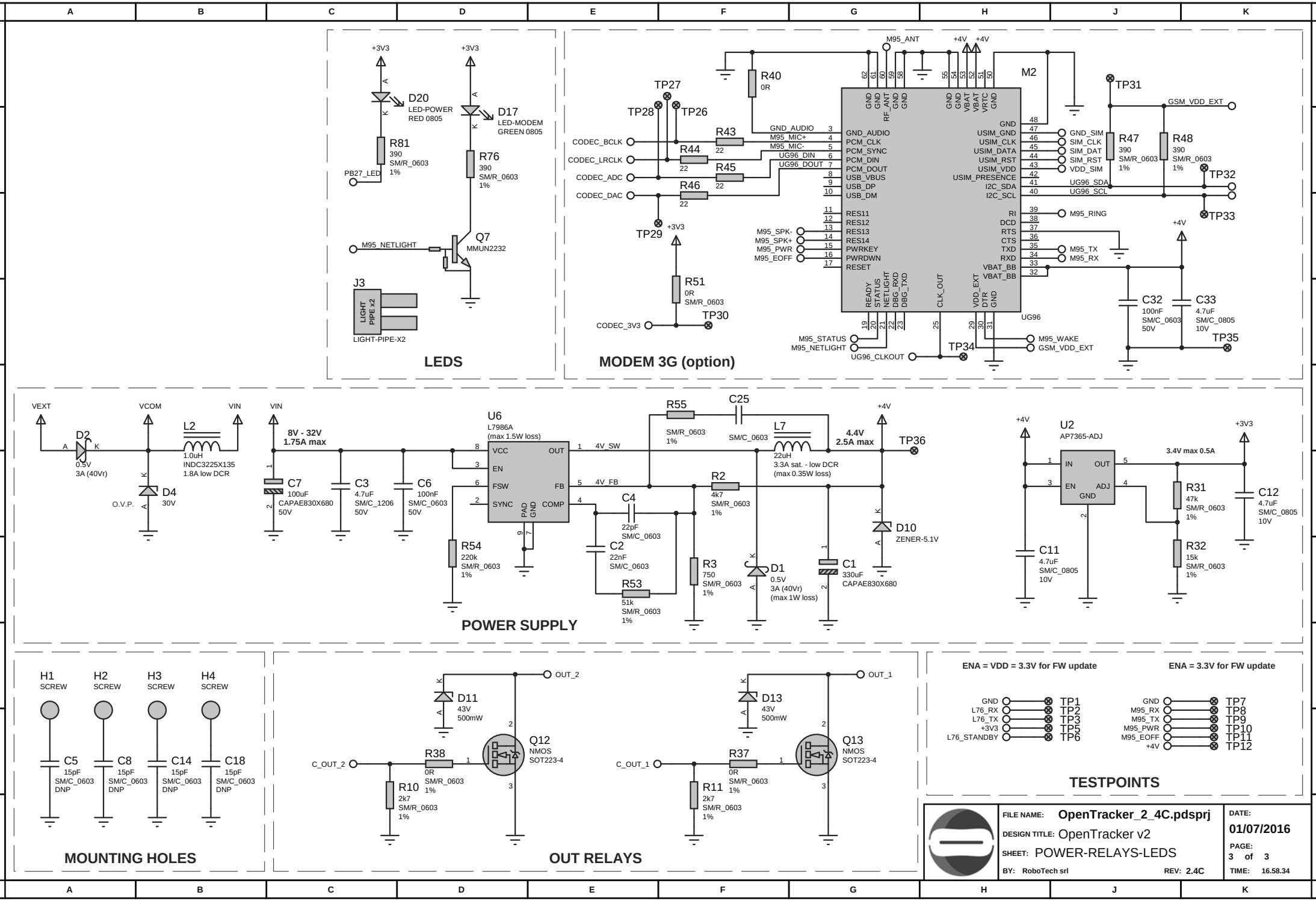
LEDS
+3V3
D20
LED-POWER
RED 0805
D17
LED-MODEM
GREEN 0805
R81
390
SM/R_0603
1%
R76
390
SM/R_0603
1%
PB27_LED
M95_NETLIGHT
Q7
MMUN2232
J3
LIGHT PIPE x2
LIGHT-PIPE-X2
MODEM 3G (option)
M95_ANT
+4V
M2
R40
0R
TP27
TP28
TP26
TP29
TP30
TP31
TP32
TP33
TP34
TP35
R43
R44
R45
R46
22
CODEC_BCLK
CODEC_LRCLK
CODEC_ADC
CODEC_DAC
GND_AUDIO
M95_MIC+
M95_MIC-
UG96_DIN
UG96_DOUT
PCM_CLK
PCM_SYNC
PCM_DIN
PCM_DOUT
USB_VBUS
USB_DP
USB_DM
RES11
RES12
RES13
RES14
PWRKEY
PWRDWN
RESET
M95_SPK-
M95_SPK+
M95_PWR
M95_EOFF
R51
0R
SM/R_0603
CODEC_3V3
GSM_VDD_EXT
GND_SIM
SIM_CLK
SIM_DAT
SIM_RST
VDD_SIM
R47
390
SM/R_0603
1%
R48
390
SM/R_0603
1%
UG96_SDA
UG96_SCL
M95_RING
M95_TX
M95_RX
C32
100nF
SM/C_0603
50V
C33
4.7uF
SM/C_0805
10V
M95_STATUS
M95_NETLIGHT
UG96_CLKOUT
M95_WAKE
GSM_VDD_EXT
UG96
POWER SUPPLY
VEXT
VCOM
VIN
D2
0.5V
3A (40Vr)
L2
1.0uH
INDC3225X135
1.8A low DCR
D4
30V
O.V.P.
8V - 32V
1.75A max
C7
100uF
CAPAE830X680
50V
C3
4.7uF
SM/C_1206
50V
C6
100nF
SM/C_0603
50V
U6
L7986A
(max 1.5W loss)
VCC
EN
FSW
SYNC
OUT
FB
COMP
PAD GND
4V_SW
4V_FB
R54
220k
SM/R_0603
1%
R55
SM/R_0603
1%
C25
SM/C_0603
L7
22uH
3.3A sat. - low DCR
(max 0.35W loss)
4.4V
2.5A max
TP36
C4
22pF
SM/C_0603
C2
22nF
SM/C_0603
R53
51k
SM/R_0603
1%
R2
4k7
SM/R_0603
1%
R3
750
SM/R_0603
1%
D1
0.5V
3A (40Vr)
(max 1W loss)
C1
330uF
CAPAE830X680
D10
ZENER-5.1V
U2
AP7365-ADJ
IN
OUT
EN
ADJ
GND
3.4V max 0.5A
+3V3
R31
47k
SM/R_0603
1%
R32
15k
SM/R_0603
1%
C12
4.7uF
SM/C_0805
10V
C11
4.7uF
SM/C_0805
10V
MOUNTING HOLES
H1
SCREW
H2
SCREW
H3
SCREW
H4
SCREW
C5
15pF
SM/C_0603
DNP
C8
15pF
SM/C_0603
DNP
C14
15pF
SM/C_0603
DNP
C18
15pF
SM/C_0603
DNP
OUT RELAYS
OUT_2
D11
43V
500mW
Q12
NMOS
SOT223-4
C_OUT_2
R38
0R
SM/R_0603
1%
R10
2k7
SM/R_0603
1%
OUT_1
D13
43V
500mW
Q13
NMOS
SOT223-4
C_OUT_1
R37
0R
SM/R_0603
1%
R11
2k7
SM/R_0603
1%
TESTPOINTS
ENA = VDD = 3.3V for FW update
ENA = 3.3V for FW update
GND
L76_RX
L76_TX
+3V3
L76_STANDBY
TP1
TP2
TP3
TP5
TP6
GND
M95_RX
M95_TX
M95_PWR
M95_EOFF
+4V
TP7
TP8
TP9
TP10
TP11
TP12
FILE NAME: OpenTracker_2_4C.pdsprj
DESIGN TITLE: OpenTracker v2
SHEET: POWER-RELAYS-LEDS
BY: RoboTech srl
REV: 2.4C
DATE: 01/07/2016
PAGE: 3 of 3
TIME: 16.58.34