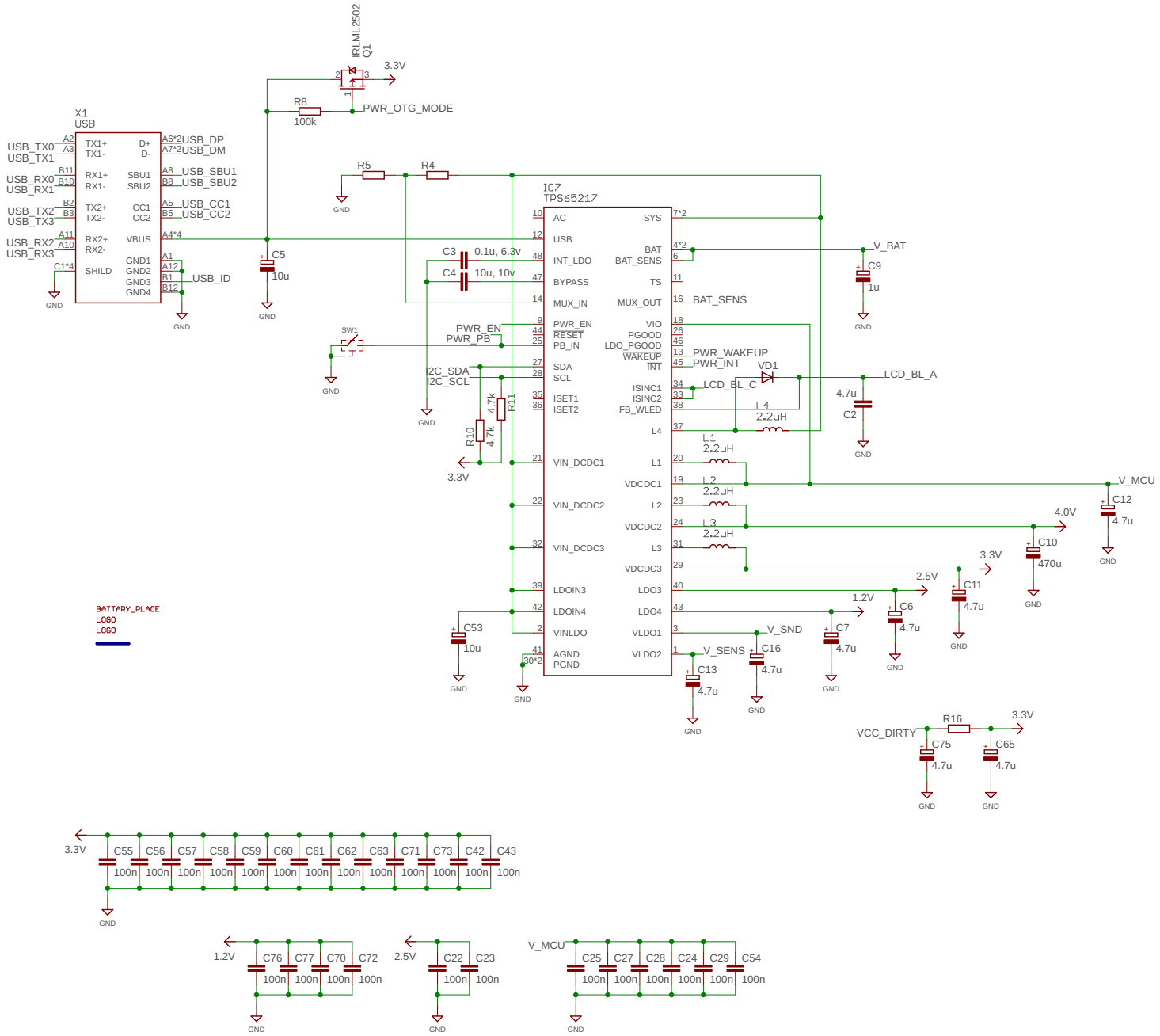
IRLML2502
Q1
3.3V
R8
100k
PWR_OTG_MODE
X1
USB
USB_TX0
USB_TX1
USB_RX0
USB_RX1
USB_TX2
USB_TX3
USB_RX2
USB_RX3
TX1+
TX1-
RX1+
RX1-
TX2+
TX2-
RX2+
RX2-
SHILD
D+
D-
SBU1
SBU2
CC1
CC2
VBUS
GND1
GND2
GND3
GND4
USB_DP
USB_DM
USB_SBU1
USB_SBU2
USB_CC1
USB_CC2
USB_ID
C5
10u
R5
R4
IC7
TPS65217
AC
USB
INT_LDO
BYPASS
MUX_IN
PWR_EN
RESET
PB_IN
SDA
SCL
ISET1
ISET2
VIN_DCDC1
VIN_DCDC2
VIN_DCDC3
LDOIN3
LDOIN4
VINLDO
AGND
PGND
SYS
BAT
BAT_SENS
TS
MUX_OUT
VIO
PGOOD
LDO_PGOOD
WAKEUP
INT
ISINC1
ISINC2
FB_WLED
L4
L1
VDCDC1
L2
VDCDC2
L3
VDCDC3
LDO3
LDO4
VLDO1
VLDO2
C3
0.1u, 6.3v
C4
10u, 10v
SW1
PWR_PB
I2C_SDA
I2C_SCL
R10
4.7k
R11
4.7k
3.3V
V_BAT
C9
1u
BAT_SENS
PWR_WAKEUP
PWR_INT
VD1
LCD_BL_A
LCD_BL_C
C2
4.7u
L4
2.2uH
L1
2.2uH
L2
2.2uH
L3
2.2uH
V_MCU
C12
4.7u
4.0V
C10
470u
3.3V
C11
4.7u
2.5V
C6
4.7u
1.2V
C7
4.7u
V_SND
C16
4.7u
V_SENS
C13
4.7u
C53
10u
BATTARY_PLACE
LOGO
LOGO
VCC_DIRTY
R16
3.3V
C75
4.7u
C65
4.7u
C55 C56 C57 C58 C59 C60 C61 C62 C63 C71 C73 C42 C43
100n
1.2V
C76 C77 C70 C72
2.5V
C22 C23
V_MCU
C25 C27 C28 C24 C29 C54
GND

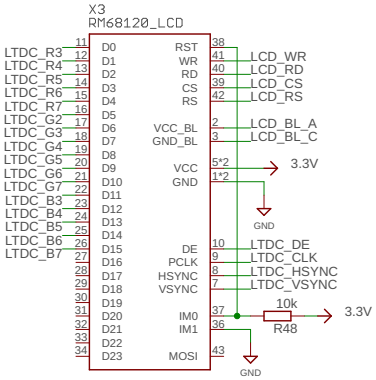
X3
RM68120_LCD
LTDC_R3
LTDC_R4
LTDC_R5
LTDC_R6
LTDC_R7
LTDC_G2
LTDC_G3
LTDC_G4
LTDC_G5
LTDC_G6
LTDC_G7
LTDC_B3
LTDC_B4
LTDC_B5
LTDC_B6
LTDC_B7
D0
D1
D2
D3
D4
D5
D6
D7
D8
D9
D10
D11
D12
D13
D14
D15
D16
D17
D18
D19
D20
D21
D22
D23
RST
WR
RD
CS
RS
VCC_BL
GND_BL
VCC
GND
DE
PCLK
HSYNC
VSYNC
IM0
IM1
MOSI
LCD_WR
LCD_RD
LCD_CS
LCD_RS
LCD_BL_A
LCD_BL_C
3.3V
GND
LTDC_DE
LTDC_CLK
LTDC_HSYNC
LTDC_VSYNC
10k
R48
3.3V
GND

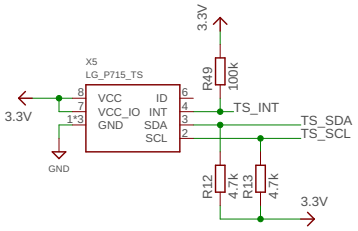
3.3V
R49
100k
X5
LG_P715_TS
VCC
VCC_IO
GND
ID
INT
SDA
SCL
TS_INT
TS_SDA
TS_SCL
3.3V
GND
R12
4.7k
R13
4.7k
3.3V

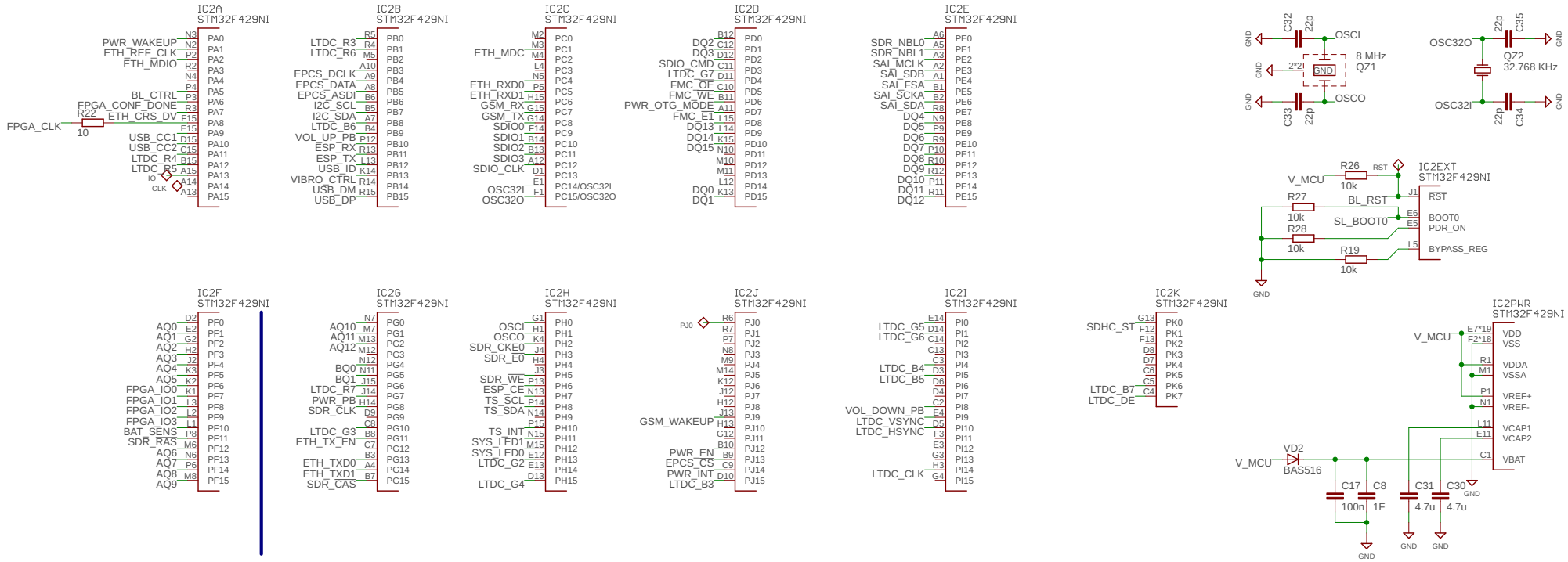
IC2A STM32F429NI
PWR_WAKEUP N3 PA0
ETH_REF_CLK N2 PA1
ETH_MDIO P2 PA2
R2 R3 PA3
N4 PA4
BL_CTRL P4 PA5
FPGA_CONF_DONE P3 PA6
FPGA_CLK R22 10 ETH_CRS_DV R3 PA7
F15 PA8
E15 PA9
USB_CC1 D15 PA10
USB_CC2 C15 PA11
LTDC_R4 B15 PA12
LTDC_R5 A15 PA13
IO A14 PA14
CLK A13 PA15
IC2B STM32F429NI
LTDC_R3 R5 PB0
LTDC_R6 R4 PB1
M5 PB2
A10 PB3
EPCS_DCLK A9 PB4
EPCS_DATA A8 PB5
EPCS_ASDI B6 PB6
I2C_SCL B5 PB7
I2C_SDA A7 PB8
LTDC_B6 B4 PB9
VOL_UP_PB P12 PB10
ESP_RX R13 PB11
ESP_TX L13 PB12
USB_ID K14 PB13
VIBRO_CTRL R14 PB14
USB_DM R15 PB15
USB_DP
IC2C STM32F429NI
M2 PC0
M3 PC1
ETH_MDC M4 PC2
L4 PC3
N5 PC4
ETH_RXD0 P5 PC5
ETH_RXD1 H15 PC6
GSM_RX G15 PC7
GSM_TX G14 PC8
SDIO0 F14 PC9
SDIO1 B14 PC10
SDIO2 B13 PC11
SDIO3 A12 PC12
SDIO_CLK D1 PC13
E1 PC14/OSC32I
OSC32I F1 PC15/OSC32O
OSC32O
IC2D STM32F429NI
B12 PD0
DQ2 C12 PD1
DQ3 D12 PD2
SDIO_CMD C11 PD3
LTDC_G7 D11 PD4
FMC_OE C10 PD5
FMC_WE B11 PD6
PWR_OTG_MODE A11 PD7
FMC_E1 L15 PD8
DQ13 L14 PD9
DQ14 K15 PD10
DQ15 N10 PD11
M10 PD12
M11 PD13
L12 PD14
DQ0 K13 PD15
DQ1
IC2E STM32F429NI
SDR_NBL0 A6 PE0
SDR_NBL1 A5 PE1
SAI_MCLK A3 PE2
SAI_SDB A2 PE3
SAI_FSA A1 PE4
SAI_SCKA B1 PE5
SAI_SDA B2 PE6
DQ4 R8 PE7
DQ5 N9 PE8
DQ6 P9 PE9
DQ7 R9 PE10
DQ8 P10 PE11
DQ9 R10 PE12
DQ10 R12 PE13
DQ11 P11 PE14
DQ12 R11 PE15
GND C32 22p OSCI
GND 2*2I GND 8 MHz QZ1
GND C33 22p OSCO
OSC32O 22p C35 GND
QZ2 32.768 KHz
OSC32I 22p C34 GND
V_MCU R26 10k RST IC2EXT STM32F429NI
R27 10k BL_RST J1 RST
SL_BOOT0 E6 BOOT0
R28 10k E5 PDR_ON
R19 10k L5 BYPASS_REG
GND
IC2F STM32F429NI
AQ0 D2 PF0
AQ1 E2 PF1
AQ2 G2 PF2
AQ3 H2 PF3
AQ4 J2 PF4
AQ5 K3 PF5
FPGA_IO0 K2 PF6
FPGA_IO1 K1 PF7
FPGA_IO2 L3 PF8
FPGA_IO3 L2 PF9
BAT_SENS L1 PF10
SDR_RAS P8 PF11
AQ6 M6 PF12
AQ7 N6 PF13
AQ8 P6 PF14
AQ9 M8 PF15
IC2G STM32F429NI
AQ10 N7 PG0
AQ11 M7 PG1
AQ12 M13 PG2
M12 PG3
N12 PG4
BQ0 N11 PG5
BQ1 J15 PG6
LTDC_R7 J14 PG7
PWR_PB H14 PG8
SDR_CLK D9 PG9
C8 PG10
LTDC_G3 B8 PG11
ETH_TX_EN C7 PG12
B3 PG13
ETH_TXD0 A4 PG14
ETH_TXD1 B7 PG15
SDR_CAS
IC2H STM32F429NI
G1 PH0
OSCI H1 PH1
OSCO K4 PH2
SDR_CKE0 J4 PH3
SDR_E0 H4 PH4
J3 PH5
SDR_WE P13 PH6
ESP_CE N13 PH7
TS_SCL P14 PH8
TS_SDA N14 PH9
P15 PH10
TS_INT N15 PH11
SYS_LED1 M15 PH12
SYS_LED0 E12 PH13
LTDC_G2 E13 PH14
D13 PH15
LTDC_G4
IC2J STM32F429NI
PJ0 R6 PJ0
R7 PJ1
P7 PJ2
N8 PJ3
M9 PJ4
M14 PJ5
K12 PJ6
J12 PJ7
H12 PJ8
J13 PJ9
GSM_WAKEUP H13 PJ10
G12 PJ11
PWR_EN B9 PJ12
EPCS_CS C9 PJ13
PWR_INT D10 PJ14
LTDC_B3 PJ15
IC2I STM32F429NI
E14 PI0
LTDC_G5 D14 PI1
LTDC_G6 C14 PI2
C13 PI3
LTDC_B4 C3 PI4
LTDC_B5 D3 PI5
D6 PI6
D4 PI7
C2 PI8
VOL_DOWN_PB E4 PI9
LTDC_VSYNC D5 PI10
LTDC_HSYNC F3 PI11
E3 PI12
G3 PI13
H3 PI14
LTDC_CLK G4 PI15
IC2K STM32F429NI
SDHC_ST G13 PK0
F12 PK1
F13 PK2
D8 PK3
D7 PK4
C6 PK5
C5 PK6
LTDC_B7 C4 PK7
LTDC_DE
IC2PWR STM32F429NI
V_MCU E7*19 F2*18 VDD VSS
R1 M1 VDDA VSSA
P1 N1 VREF+ VREF-
L11 E11 VCAP1 VCAP2
C1 VBAT
V_MCU VD2 BAS516
C17 100n C8 1F
C31 4.7u C30 4.7u
GND

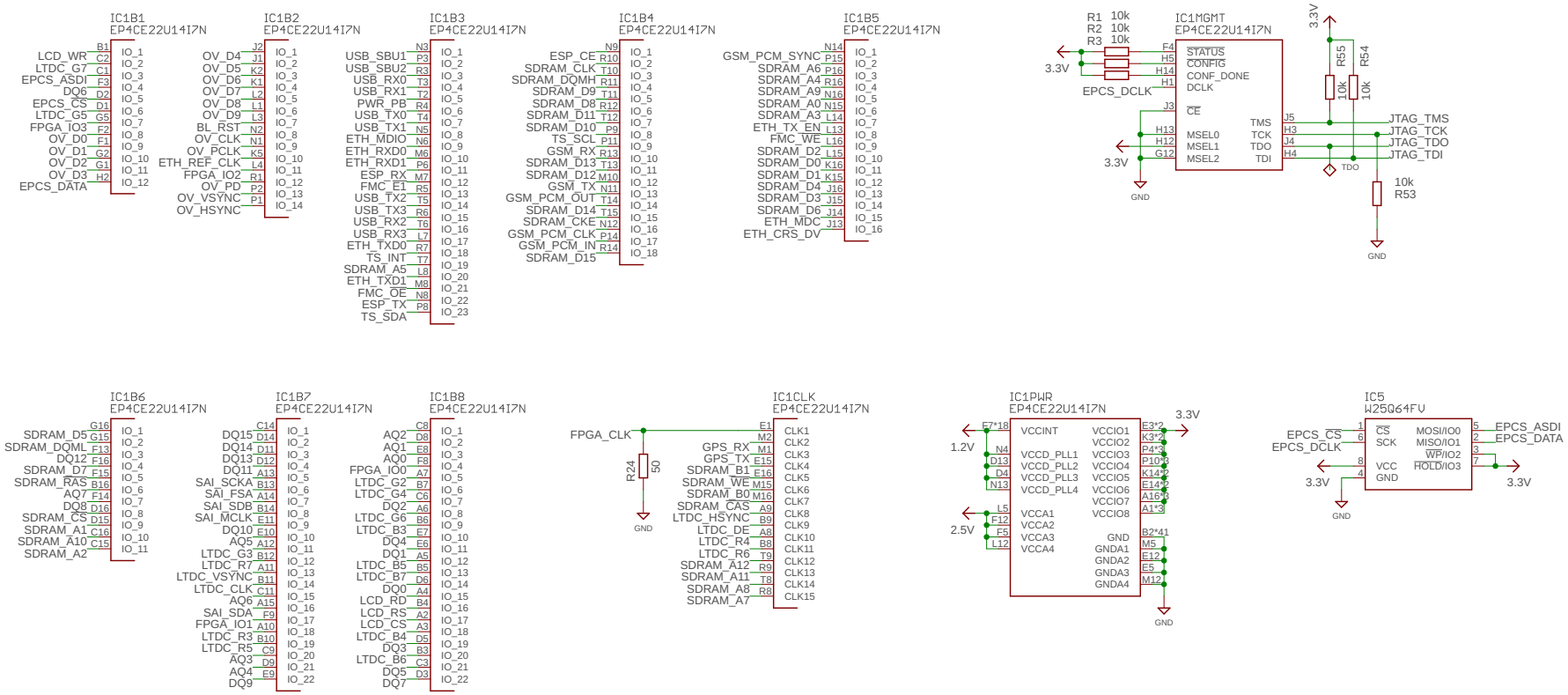
IC1B1
EP4CE22U14I7N
LCD_WR B1
LTDC_G7 C2
EPCS_ASDI C1
DQ6 F3
EPCS_CS D2
LTDC_G5 D1
FPGA_IO3 G5
OV_D0 F2
OV_D1 F1
OV_D2 G2
OV_D3 G1
EPCS_DATA H2
IC1B2
EP4CE22U14I7N
OV_D4 J2
OV_D5 J1
OV_D6 K2
OV_D7 K1
OV_D8 L2
OV_D9 L1
BL_RST L3
OV_CLK N2
OV_PCLK N1
ETH_REF_CLK K5
FPGA_IO2 L4
OV_PD R1
OV_VSYNC P2
OV_HSYNC P1
IC1B3
EP4CE22U14I7N
USB_SBU1 N3
USB_SBU2 P3
USB_RX0 R3
USB_RX1 T3
PWR_PB T2
USB_TX0 R4
USB_TX1 T4
ETH_MDIO N5
ETH_RXD0 N6
ETH_RXD1 M6
ESP_RX P6
FMC_E1 M7
USB_TX2 R5
USB_TX3 T5
USB_RX2 R6
USB_RX3 T6
ETH_TXD0 L7
TS_INT R7
SDRAM_A5 T7
ETH_TXD1 L8
FMC_OE M8
ESP_TX N8
TS_SDA P8
IC1B4
EP4CE22U14I7N
ESP_CE N9
SDRAM_CLK R10
SDRAM_DQMH T10
SDRAM_D9 R11
SDRAM_D8 T11
SDRAM_D11 R12
SDRAM_D10 T12
TS_SCL P9
GSM_RX P11
SDRAM_D13 R13
SDRAM_D12 T13
GSM_TX M10
GSM_PCM_OUT N11
SDRAM_D14 T14
SDRAM_CKE T15
GSM_PCM_CLK N12
GSM_PCM_IN P14
SDRAM_D15 R14
IC1B5
EP4CE22U14I7N
GSM_PCM_SYNC N14
SDRAM_A6 P15
SDRAM_A4 P16
SDRAM_A9 R16
SDRAM_A0 N16
SDRAM_A3 N15
ETH_TX_EN L14
FMC_WE L13
SDRAM_D2 L16
SDRAM_D0 L15
SDRAM_D1 K16
SDRAM_D4 K15
SDRAM_D3 J16
SDRAM_D6 J15
ETH_MDC J14
ETH_CRS_DV J13
R1 10k
R2 10k
R3 10k
3.3V
EPCS_DCLK
IC1MGMT
EP4CE22U14I7N
STATUS F4
CONFIG H5
CONF_DONE H14
DCLK H1
CE J3
MSEL0 H13
MSEL1 H12
MSEL2 G12
TMS J5
TCK H3
TDO J4
TDI H4
3.3V
GND
R55 10k
R54 10k
JTAG_TMS
JTAG_TCK
JTAG_TDO
JTAG_TDI
TDO
10k
R53
GND
IC1B6
EP4CE22U14I7N
SDRAM_D5 G16
SDRAM_DQML G15
DQ12 F13
SDRAM_D7 F16
SDRAM_RAS F15
AQ7 B16
DQ8 F14
SDRAM_CS D16
SDRAM_A1 D15
SDRAM_A10 C16
SDRAM_A2 C15
IC1B7
EP4CE22U14I7N
DQ15 C14
DQ14 D14
DQ13 D11
DQ11 D12
SAI_SCKA A13
SAI_FSA B13
SAI_SDB A14
SAI_MCLK B14
DQ10 E11
AQ5 E10
LTDC_G3 A12
LTDC_R7 B12
LTDC_VSYNC A11
LTDC_CLK B11
AQ6 C11
SAI_SDA A15
FPGA_IO1 F9
LTDC_R3 A10
LTDC_R5 B10
AQ3 C9
AQ4 D9
DQ9 E9
IC1B8
EP4CE22U14I7N
AQ2 C8
AQ1 D8
AQ0 E8
FPGA_IO0 F8
LTDC_G2 A7
LTDC_G4 B7
DQ2 C6
LTDC_G6 A6
LTDC_B3 B6
DQ4 E7
DQ1 E6
LTDC_B5 A5
LTDC_B7 B5
DQ0 D6
LCD_RD A4
LCD_RS B4
LCD_CS A2
LTDC_B4 A3
DQ3 D5
LTDC_B6 B3
DQ5 C3
DQ7 D3
FPGA_CLK
R24 50
GND
IC1CLK
EP4CE22U14I7N
E1 CLK1
M2 CLK2
GPS_RX M1 CLK3
GPS_TX E15 CLK4
SDRAM_B1 E16 CLK5
SDRAM_WE M15 CLK6
SDRAM_B0 M16 CLK7
SDRAM_CAS A9 CLK8
LTDC_HSYNC B9 CLK9
LTDC_DE A8 CLK10
LTDC_R4 B8 CLK11
LTDC_R6 T9 CLK12
SDRAM_A12 R9 CLK13
SDRAM_A11 T8 CLK14
SDRAM_A8 R8 CLK15
SDRAM_A7
IC1PWR
EP4CE22U14I7N
1.2V
2.5V
VCCINT
VCCD_PLL1
VCCD_PLL2
VCCD_PLL3
VCCD_PLL4
VCCA1
VCCA2
VCCA3
VCCA4
VCCIO1
VCCIO2
VCCIO3
VCCIO4
VCCIO5
VCCIO6
VCCIO7
VCCIO8
GND
GNDA1
GNDA2
GNDA3
GNDA4
3.3V
GND
IC5
W25Q64FV
EPCS_CS
EPCS_DCLK
CS
SCK
VCC
GND
MOSI/IO0
MISO/IO1
WP/IO2
HOLD/IO3
EPCS_ASDI
EPCS_DATA
3.3V
GND

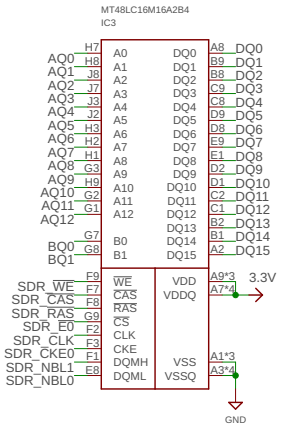
MT48LC16M16A2B4
IC3
H7 A0 DQ0 A8 DQ0
AQ0 H8 A1 DQ1 B9 DQ1
AQ1 J8 A2 DQ2 B8 DQ2
AQ2 J7 A3 DQ3 C9 DQ3
AQ3 J3 A4 DQ4 C8 DQ4
AQ4 J2 A5 DQ5 D9 DQ5
AQ5 H3 A6 DQ6 D8 DQ6
AQ6 H2 A7 DQ7 E9 DQ7
AQ7 H1 A8 DQ8 E1 DQ8
AQ8 G3 A9 DQ9 D2 DQ9
AQ9 H9 A10 DQ10 D1 DQ10
AQ10 G2 A11 DQ11 C2 DQ11
AQ11 G1 A12 DQ12 C1 DQ12
AQ12 DQ13 B2 DQ13
G7 B0 DQ14 B1 DQ14
BQ0 G8 B1 DQ15 A2 DQ15
F9 WE VDD A9*3 3.3V
SDR_WE F7 CAS VDDQ A7*4
SDR_CAS F8 RAS
SDR_RAS G9 CS
SDR_E0 F2 CLK
SDR_CLK F3 CKE
SDR_CKE0 F1 DQMH VSS A1*3
SDR_NBL1 E8 DQML VSSQ A3*4
SDR_NBL0
GND

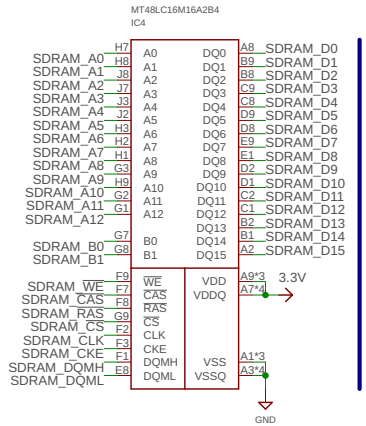
MT48LC16M16A2B4
IC4
H7 A0 DQ0 A8 SDRAM_D0
SDRAM_A0 H8 A1 DQ1 B9 SDRAM_D1
SDRAM_A1 J8 A2 DQ2 B8 SDRAM_D2
SDRAM_A2 J7 A3 DQ3 C9 SDRAM_D3
SDRAM_A3 J3 A4 DQ4 C8 SDRAM_D4
SDRAM_A4 J2 A5 DQ5 D9 SDRAM_D5
SDRAM_A5 H3 A6 DQ6 D8 SDRAM_D6
SDRAM_A6 H2 A7 DQ7 E9 SDRAM_D7
SDRAM_A7 H1 A8 DQ8 E1 SDRAM_D8
SDRAM_A8 G3 A9 DQ9 D2 SDRAM_D9
SDRAM_A9 H9 A10 DQ10 D1 SDRAM_D10
SDRAM_A10 G2 A11 DQ11 C2 SDRAM_D11
SDRAM_A11 G1 A12 DQ12 C1 SDRAM_D12
SDRAM_A12 DQ13 B2 SDRAM_D13
G7 B0 DQ14 B1 SDRAM_D14
SDRAM_B0 G8 B1 DQ15 A2 SDRAM_D15
SDRAM_B1
F9 WE VDD A9*3 3.3V
SDRAM_WE F7 CAS VDDQ A7*4
SDRAM_CAS F8 RAS
SDRAM_RAS G9 CS
SDRAM_CS F2 CLK
SDRAM_CLK F3 CKE
SDRAM_CKE F1 DQMH VSS A1*3
SDRAM_DQMH E8 DQML VSSQ A3*4
SDRAM_DQML
GND

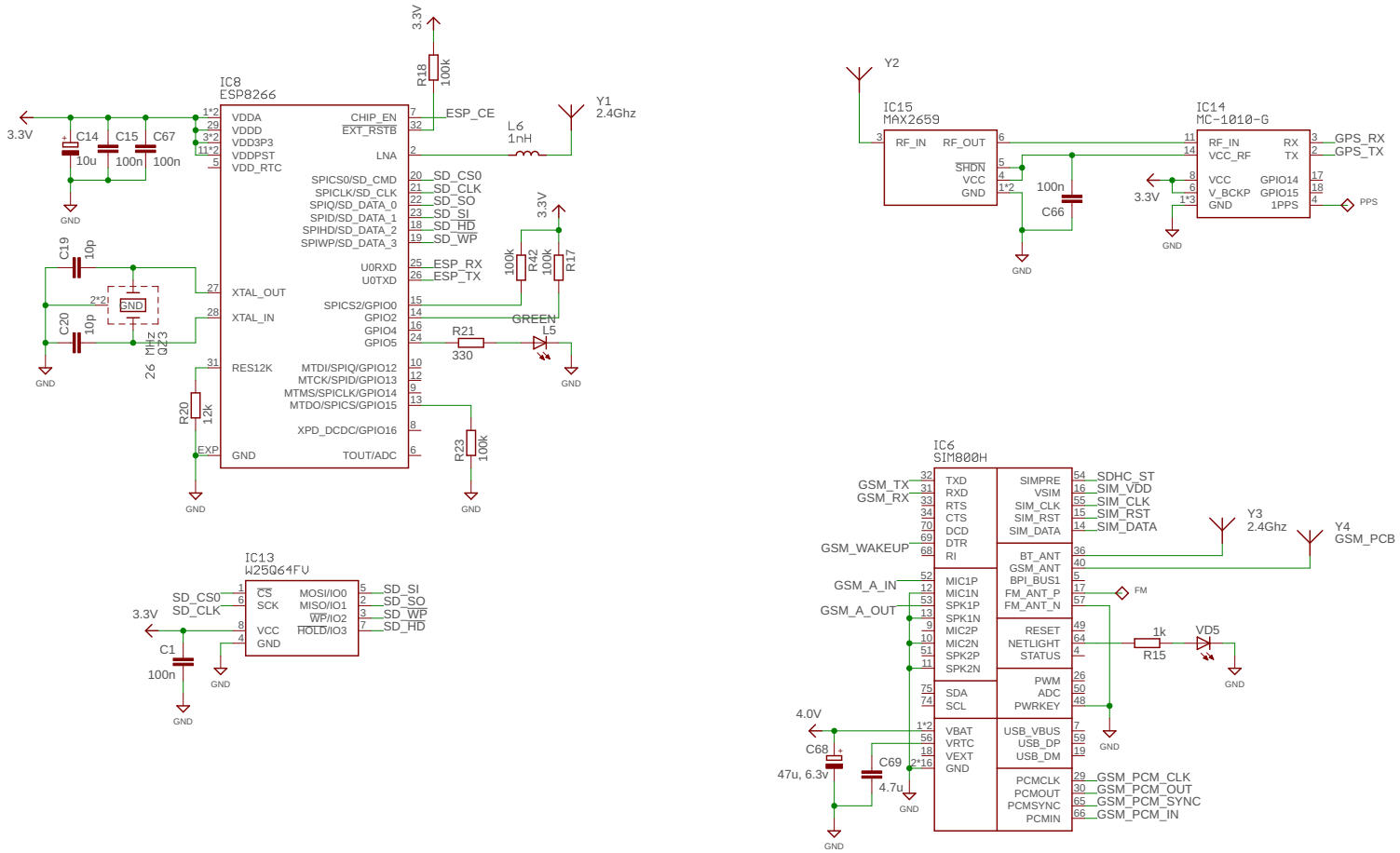
IC8
ESP8266
VDDA
VDDD
VDD3P3
VDDPST
VDD_RTC
CHIP_EN
EXT_RSTB
LNA
SPICS0/SD_CMD
SPICLK/SD_CLK
SPIQ/SD_DATA_0
SPID/SD_DATA_1
SPIHD/SD_DATA_2
SPIWP/SD_DATA_3
U0RXD
U0TXD
XTAL_OUT
XTAL_IN
SPICS2/GPIO0
GPIO2
GPIO4
GPIO5
RES12K
MTDI/SPIQ/GPIO12
MTCK/SPID/GPIO13
MTMS/SPICLK/GPIO14
MTDO/SPICS/GPIO15
XPD_DCDC/GPIO16
GND
TOUT/ADC
EXP
3.3V
R18
100k
ESP_CE
L6
1nH
Y1
2.4Ghz
C14
10u
C15
100n
C67
100n
C19
10p
C20
10p
GND
R20
12k
R21
330
L5
GREEN
R42
100k
R17
100k
R23
100k
SD_CS0
SD_CLK
SD_SI
SD_SO
SD_WP
SD_HD
ESP_RX
ESP_TX
IC13
W25Q64FV
CS
SCK
MOSI/IO0
MISO/IO1
WP/IO2
HOLD/IO3
VCC
GND
C1
100n
Y2
IC15
MAX2659
RF_IN
RF_OUT
SHDN
VCC
GND
100n
C66
IC14
MC-1010-G
RF_IN
VCC_RF
RX
TX
VCC
V_BCKP
GND
GPIO14
GPIO15
1PPS
GPS_RX
GPS_TX
PPS
IC6
SIM800H
TXD
RXD
RTS
CTS
DCD
DTR
RI
GSM_TX
GSM_RX
GSM_WAKEUP
SIMPRE
VSIM
SIM_CLK
SIM_RST
SIM_DATA
SDHC_ST
SIM_VDD
SIM_CLK
SIM_RST
SIM_DATA
Y3
2.4Ghz
Y4
GSM_PCB
BT_ANT
GSM_ANT
BPI_BUS1
FM_ANT_P
FM_ANT_N
FM
MIC1P
MIC1N
SPK1P
SPK1N
MIC2P
MIC2N
SPK2P
SPK2N
GSM_A_IN
GSM_A_OUT
RESET
NETLIGHT
STATUS
1k
R15
VD5
SDA
SCL
PWM
ADC
PWRKEY
VBAT
VRTC
VEXT
GND
4.0V
C68
47u, 6.3V
C69
4.7u
USB_VBUS
USB_DP
USB_DM
PCMCLK
PCMOUT
PCMSYNC
PCMIN
GSM_PCM_CLK
GSM_PCM_OUT
GSM_PCM_SYNC
GSM_PCM_IN

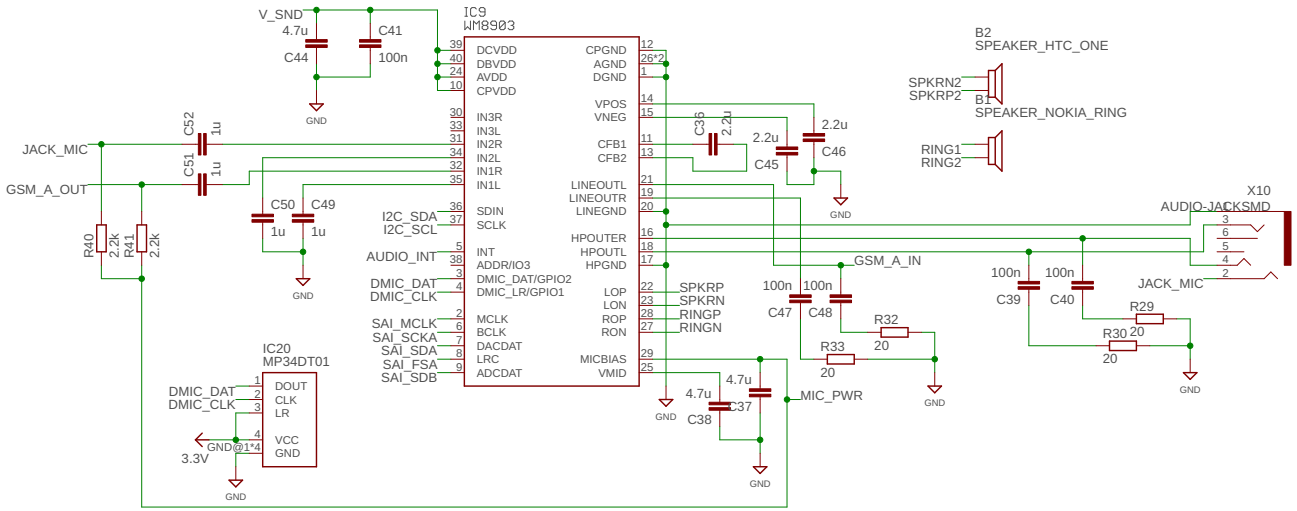
IC9
WM8903
V_SND
4.7u
C44
C41
100n
GND
DCVDD
DBVDD
AVDD
CPVDD
CPGND
AGND
DGND
VPOS
VNEG
CFB1
CFB2
LINEOUTL
LINEOUTR
LINEGND
HPOUTER
HPOUTL
HPGND
LOP
LON
ROP
RON
MICBIAS
VMID
IN3R
IN3L
IN2R
IN2L
IN1R
IN1L
SDIN
SCLK
INT
ADDR/IO3
DMIC_DAT/GPIO2
DMIC_LR/GPIO1
MCLK
BCLK
DACDAT
LRC
ADCDAT
JACK_MIC
GSM_A_OUT
C52
C51
1u
R40
R41
2.2k
C50
C49
I2C_SDA
I2C_SCL
AUDIO_INT
DMIC_DAT
DMIC_CLK
SAI_MCLK
SAI_SCKA
SAI_SDA
SAI_FSA
SAI_SDB
IC20
MP34DT01
DOUT
CLK
LR
VCC
GND
3.3V
C35
2.2u
C45
C46
SPKRP
SPKRN
RINGP
RINGN
4.7u
C37
C38
MIC_PWR
B2
SPEAKER_HTC_ONE
SPKRN2
SPKRP2
B1
SPEAKER_NOKIA_RING
RING1
RING2
GSM_A_IN
100n
C47
C48
R32
R33
20
X10
AUDIO-JACKSMD
C39
C40
R29
R30
JACK_MIC

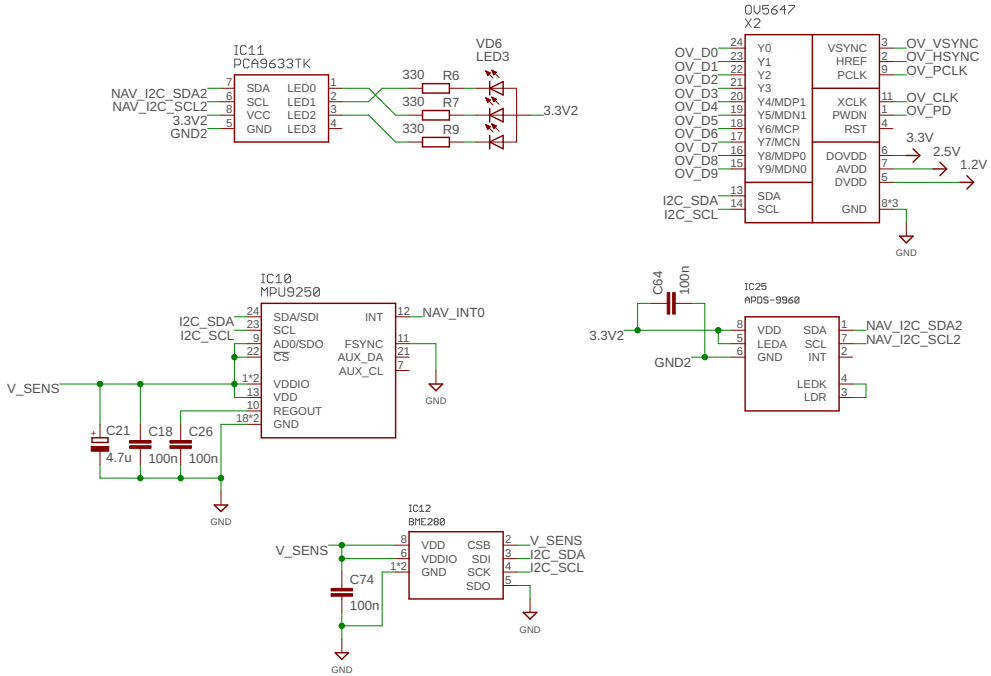
IC11
PCA9633TK
SDA
SCL
VCC
GND
LED0
LED1
LED2
LED3
NAV_I2C_SDA2
NAV_I2C_SCL2
3.3V2
GND2
330
R6
R7
R9
VD6
LED3
3.3V2
OV5647
X2
OV_D0
OV_D1
OV_D2
OV_D3
OV_D4
OV_D5
OV_D6
OV_D7
OV_D8
OV_D9
Y0
Y1
Y2
Y3
Y4/MDP1
Y5/MDN1
Y6/MCP
Y7/MCN
Y8/MDP0
Y9/MDN0
SDA
SCL
I2C_SDA
I2C_SCL
VSYNC
HREF
PCLK
XCLK
PWDN
RST
DOVDD
AVDD
DVDD
GND
OV_VSYNC
OV_HSYNC
OV_PCLK
OV_CLK
OV_PD
3.3V
2.5V
1.2V
8*3
GND
IC10
MPU9250
SDA/SDI
SCL
AD0/SDO
CS
VDDIO
VDD
REGOUT
GND
INT
FSYNC
AUX_DA
AUX_CL
I2C_SDA
I2C_SCL
NAV_INT0
V_SENS
C21
4.7u
C18
100n
C26
100n
GND
C64
100n
3.3V2
GND2
IC25
APDS-9960
VDD
LEDA
GND
SDA
SCL
INT
LEDK
LDR
NAV_I2C_SDA2
NAV_I2C_SCL2
IC12
BME280
VDD
VDDIO
GND
CSB
SDI
SCK
SDO
V_SENS
I2C_SDA
I2C_SCL
C74
100n
GND

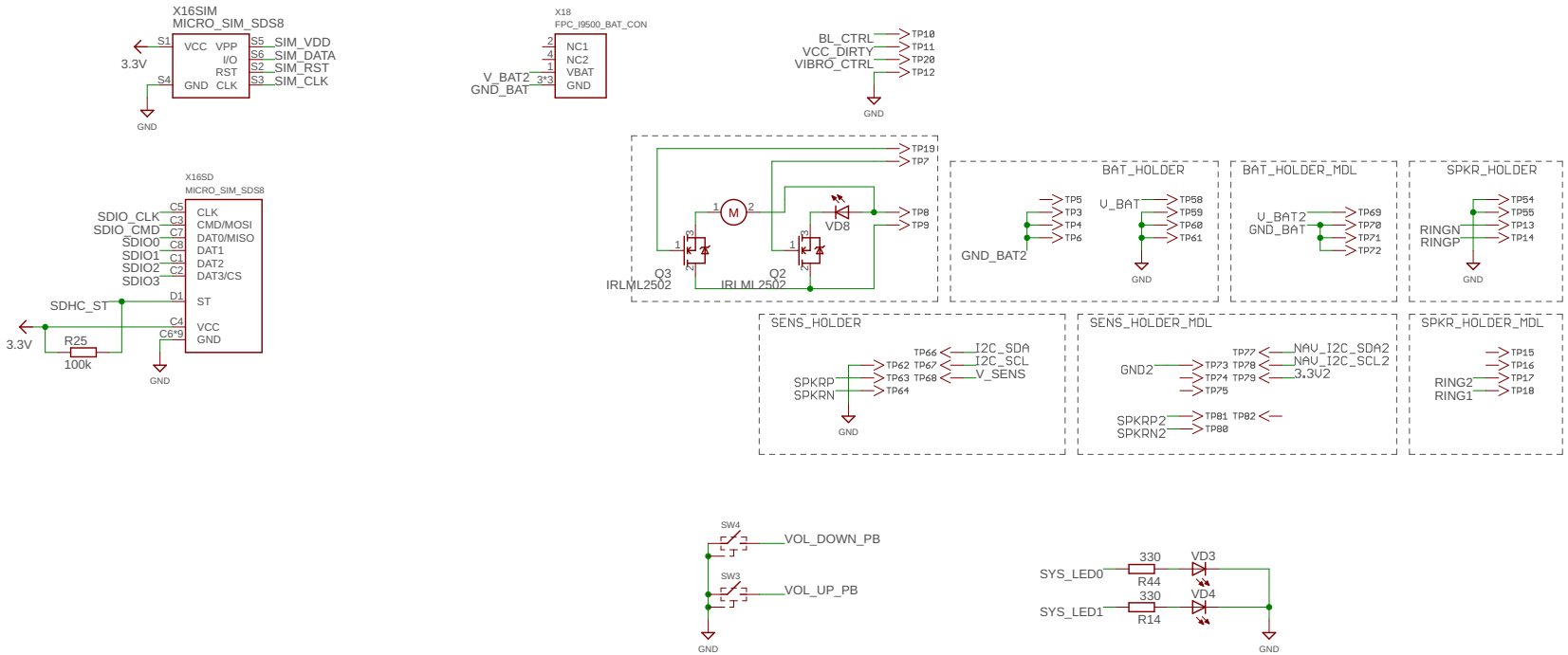
X16SIM
MICRO_SIM_SDS8
VCC
VPP
I/O
RST
GND
CLK
S1
S4
S5
S6
S2
S3
SIM_VDD
SIM_DATA
SIM_RST
SIM_CLK
3.3V
GND
X18
FPC_I9500_BAT_CON
NC1
NC2
VBAT
GND
V_BAT2
GND_BAT
BL_CTRL
VCC_DIRTY
VIBRO_CTRL
TP10
TP11
TP20
TP12
X16SD
MICRO_SIM_SDS8
CLK
CMD/MOSI
DAT0/MISO
DAT1
DAT2
DAT3/CS
ST
VCC
GND
SDIO_CLK
SDIO_CMD
SDIO0
SDIO1
SDIO2
SDIO3
SDHC_ST
R25
100k
M
VD8
Q3
IRLML2502
Q2
IRLML2502
TP19
TP7
TP8
TP9
BAT_HOLDER
GND_BAT2
V_BAT
TP5
TP3
TP4
TP6
TP58
TP59
TP60
TP61
BAT_HOLDER_MDL
V_BAT2
GND_BAT
TP69
TP70
TP71
TP72
SPKR_HOLDER
RINGN
RINGP
TP54
TP55
TP13
TP14
SENS_HOLDER
SPKRP
SPKRN
TP66
TP67
TP63
TP68
TP64
I2C_SDA
I2C_SCL
V_SENS
SENS_HOLDER_MDL
GND2
TP77
TP73
TP78
TP74
TP79
TP75
NAV_I2C_SDA2
NAV_I2C_SCL2
3.3V2
SPKRP2
SPKRN2
TP81
TP82
TP80
SPKR_HOLDER_MDL
RING2
RING1
TP15
TP16
TP17
TP18
SW4
SW3
VOL_DOWN_PB
VOL_UP_PB
SYS_LED0
SYS_LED1
330
R44
330
R14
VD3
VD4