ECOR 1047

Final Report

Design Process for New Clamp Model

Submitted by

Team XYZ, Group 29

Xuan Nguyen 101228417 (LEADER)

Yazan Zeidat 101247504

Zane Labonté-Hagar 101239002

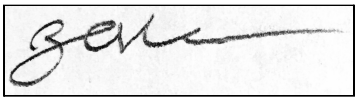

Date: February 18, 2022

Carleton University

Table of Contents

Table of Contents.....2

Introduction.....3

1.1 Team members .....……..3

1.2 Project Purpose.....3

2 Background 4

2.1 Visual communication.....4

3 Reverse Engineering (Deliverable 1 Drawings) 5-13

4 Conceptual Design (Deliverable 2 Drawings): 14-21

5 Detail Design (Deliverable 3 Drawings – Fusion 360) 22-27

6 Conclusions and Recommendations 28

7 References 29

APPENDICES 29-32

1 Introduction

1.1 Team members

Give a brief introduction of each team member and their role (or how you divided the tasks) within the team and the project (max 250 words and use third person).

Xuan Nguyen is a first-year Biomedical and Mechanical Engineering student at Carleton University. She is the group leader of Group XYZ for the ECOR 1047 project. Xuan is responsible for creating shared documents for the group to work on and then submit each deliverable on behalf of the team. She contributed to some of the different design concepts and helped create drawings for the chosen configuration.

Yazan Zeidat is a Biomedical and Mechanical Engineering student studying his first year at Carleton University. He is a member of group XYZ in the ECOR 1047 project. Some of the things that he was responsible for were the background section of the final report, taking measurements of the chosen clamp in deliverable 1, and creating sketches and technical drawings in deliverable 1 and 2.

Zane Labonté-Hagar is an Engineering Physics student at Carleton University in his first year. Some of the things that he was responsible for were brainstorming possible clamp components, CAD development, and CAD drawings.

1.2 Project Purpose

Introduce the purpose of the project and detail/describe your chosen object (max 100 words).

Our team's purpose was to design an affordable clamping device intended for anyone that needs it for work/school or for everyday household activities. The device's purpose is to hold objects tightly together via inward force/pressure, at a precise 90 degree angle. The object(s) would then be securely held in place so the user can easily operate on it. For example, two delicate wood pieces could be joined or glued together at a square angle.

2 Background

2.1 Visual Communication

In today's competitive environment, when marketing and presentations are critical ingredients for individual and business success, visual communication is a must-have ability.

Visual communication uses different techniques and tools, such as 3D modeling, sketches, and technical drawings to describe the functionalities of different objects, and deliver it in a visual way via graphs, technical drawings, charts, etc.

Modern 3D modeling allows for design depth that is not possible with rough sketches or 2D designs, such as enhanced detail control. It also allows engineers to investigate the physical characteristics of a design without being bound by physical constraints.

Sketching skills are vital for engineering students since they not only serve as a sense-making tool for solving design challenges, but they also promote reflexive geometric problem solving. Freehand sketching develops and requires students to actively construct their knowledge.[3] Finally, because the technical drawings are shown with precise body proportions, you can preserve design lines and features in real size. This is useful for achieving balance, as well as seeing how the object will seem once it has been manufactured.[2]

3 Reverse Engineering (Deliverable 1 Drawings)

Clamping Device

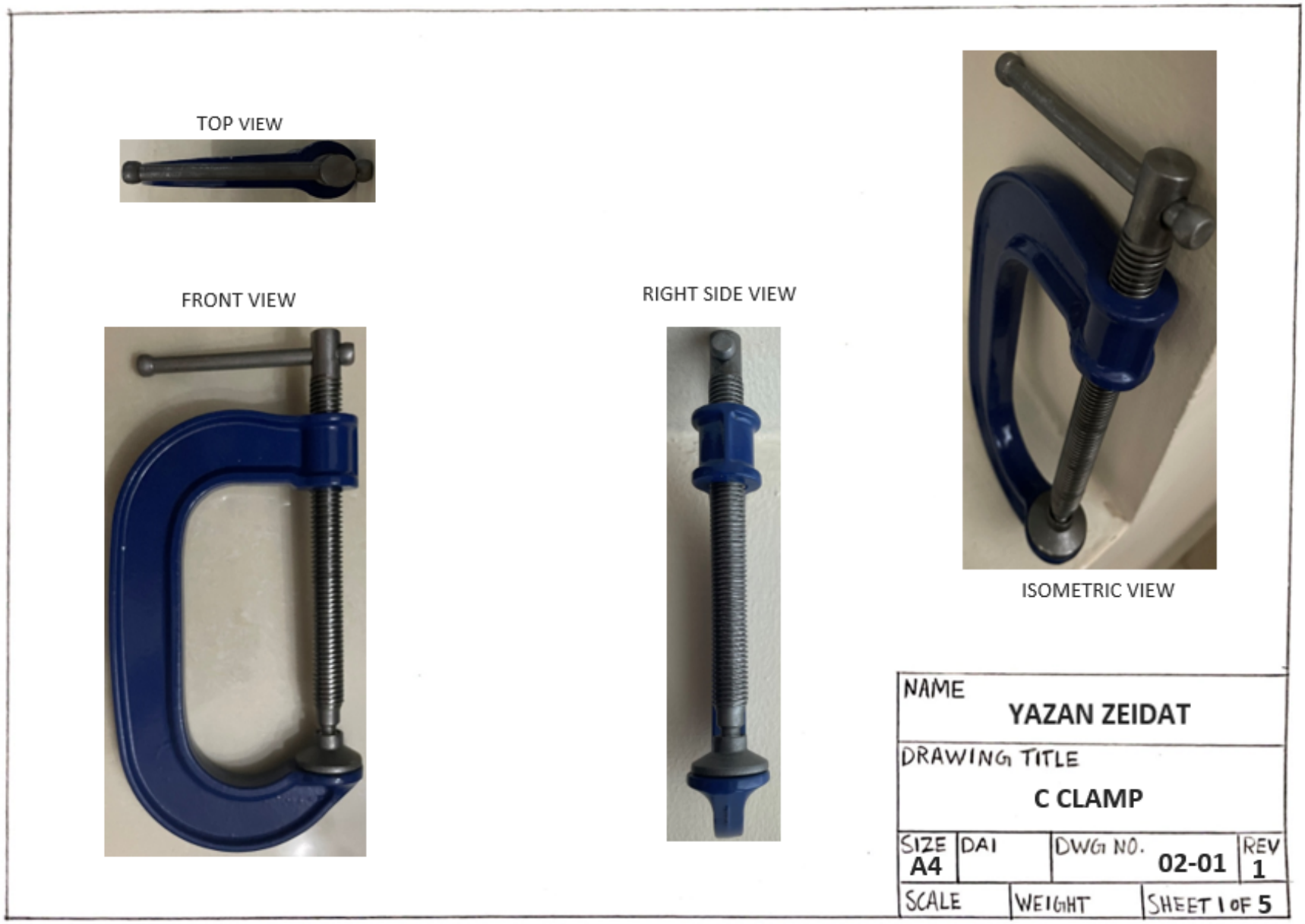

Clamping Device Components

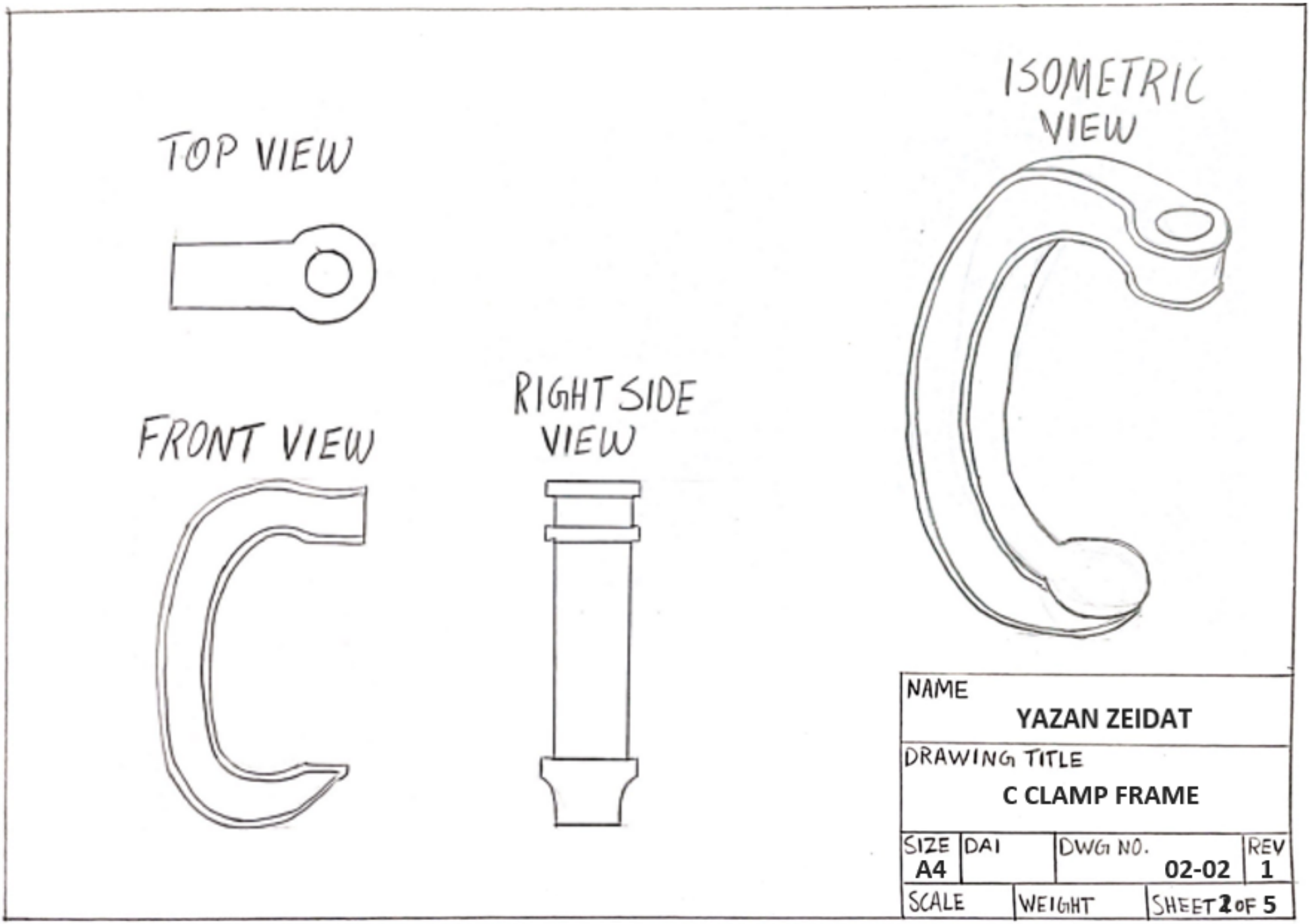

TOP VIEW

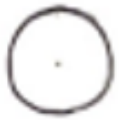

ISOMETRIC VIEW

FRONT VIEW

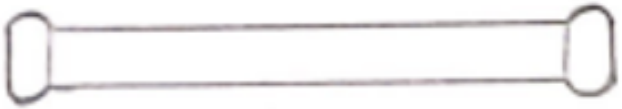

NAME YAZAN ZEIDAT			
DRAWING TITLE C CLAMP HANDLE			
SIZE A4	DAI	DWG NO. 02-03	REV 1
SCALE	WEIGHT	SHEET 3 OF 5	

TOP VIEW

FRONT VIEW

ISOMETRIC VIEW

NAME YAZAN ZEIDAT			
DRAWING TITLE C CLAMP MOVABLE JAW			
SIZE A4	DAI	DWG NO. 02-04	REV 1
SCALE	WEIGHT	SHEET 4 OF 5	

TOP VIEW

FRONT VIEW

ISOMETRIC VIEW

NAME YAZAN ZEIDAT			
DRAWING TITLE C CLAMP SCREW			
SIZE A4	DAI	DWG NO. 02-05	REV 1
SCALE	WEIGHT	SHEET 5 OF 5	

Hand-drawn, orthographic 3rd-angle projection for Clamp components:

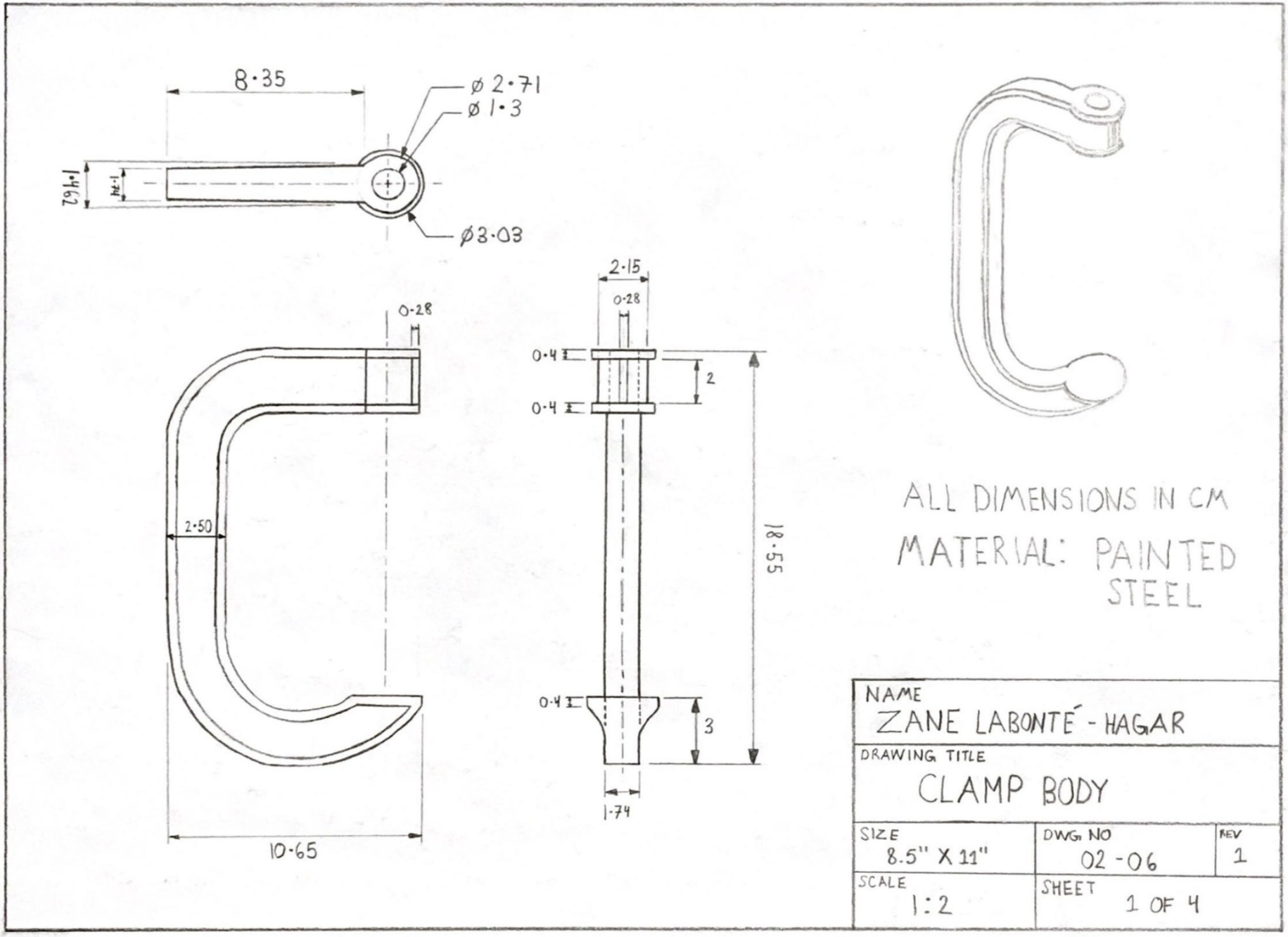

TOP VIEW

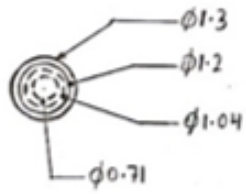

FRONT VIEW

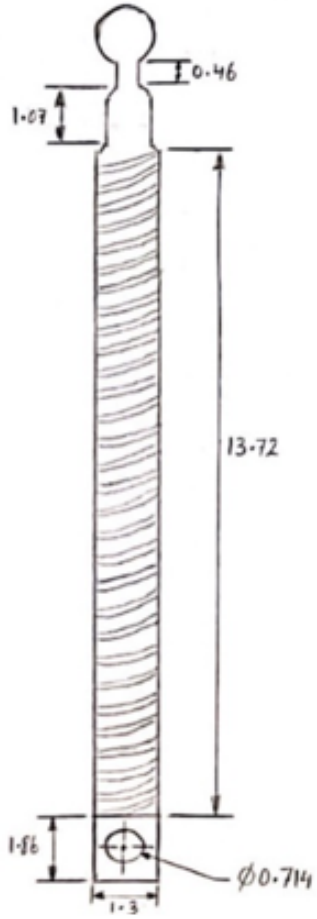

ISOMETRIC VIEW

ALL MEASUREMENTS ARE IN CM

SCREW MATERIALS: STEEL

NAME YAZAN ZEIDAT		
DRAWING TITLE C CLAMP SCREW		
SIZE A4	DWG NO 02-07	REV 1
SCALE 1:1.5	SHEET 2 OF 4	

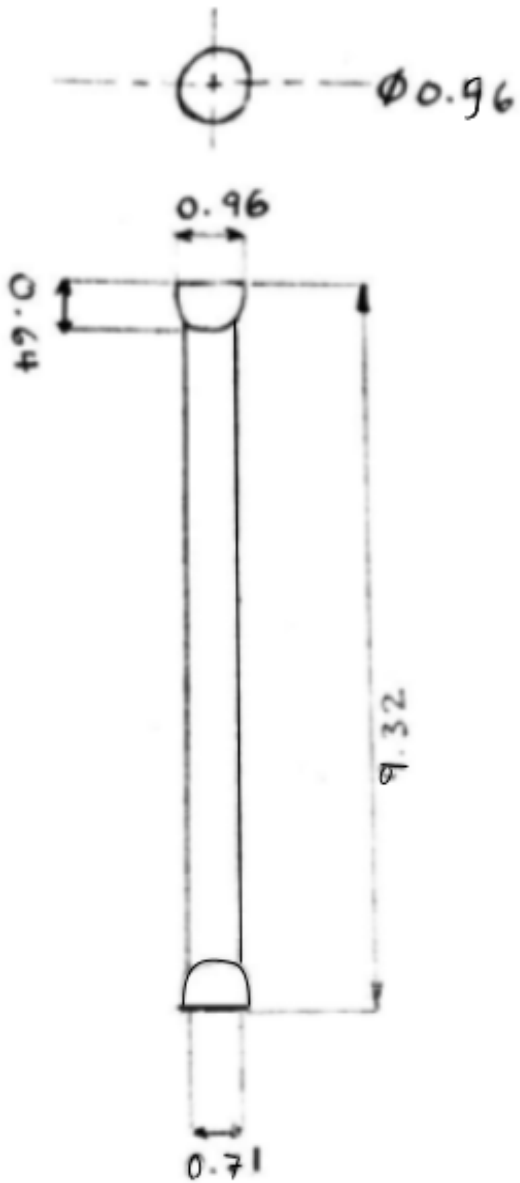

FRONT VIEW SAME AS SIDE VIEW

ALL MEASUREMENTS IN CM

MATERIAL: STEEL

NAME: XUAN NGUYEN		
TITLE: HANDLE		
SIZE A4	DWG NO. 02-08	REV 1
SCALE 1:1	SHEET 3 OF 4	

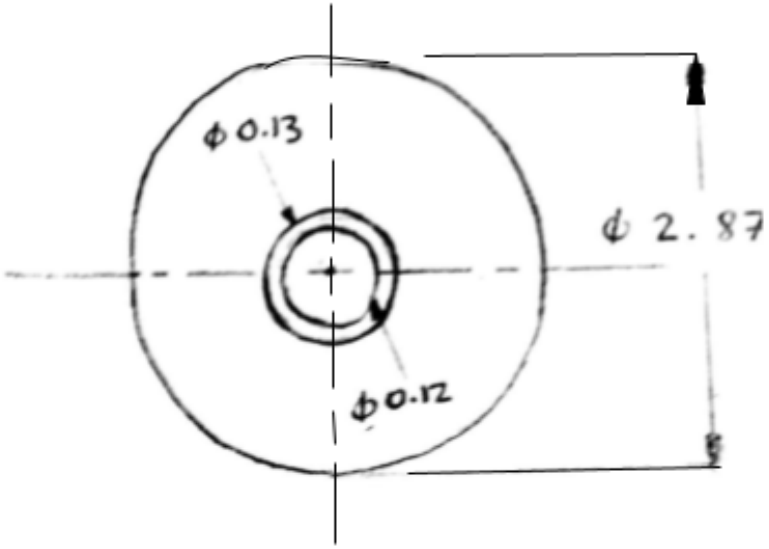

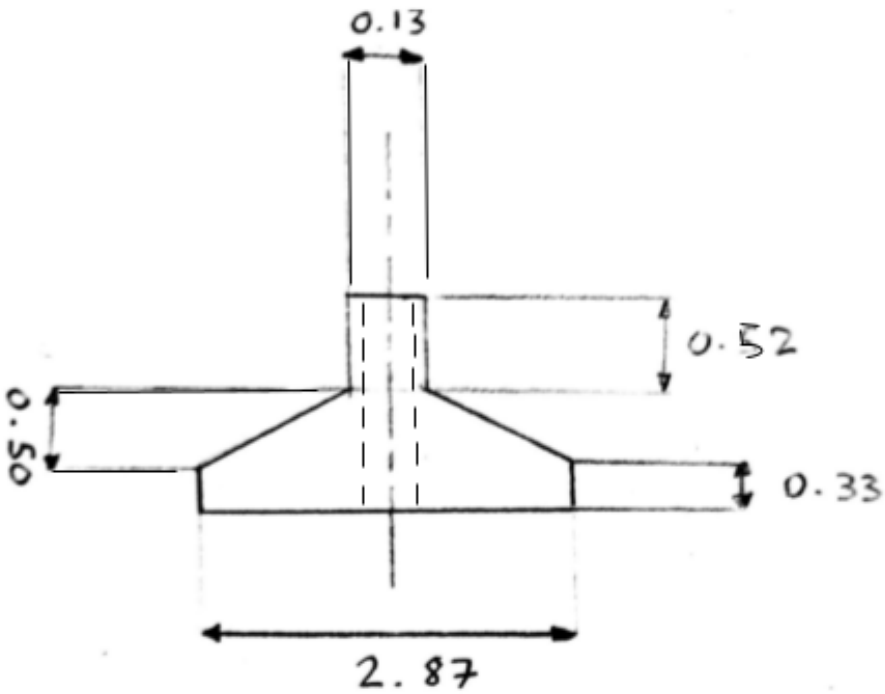

ALL MEASUREMENTS IN CM

MATERIAL: STEEL

NAME : XUAN NGUYEN		
TITLE : C-CLAMP JAW		
SIZE A4	DWG NO. 02-09	REV. 1
SCALE 2 : 1	SHEET 4 OF 4	

4 Conceptual Design (Deliverable 2 Drawings)

Concepts for each functional component

Main Frame:

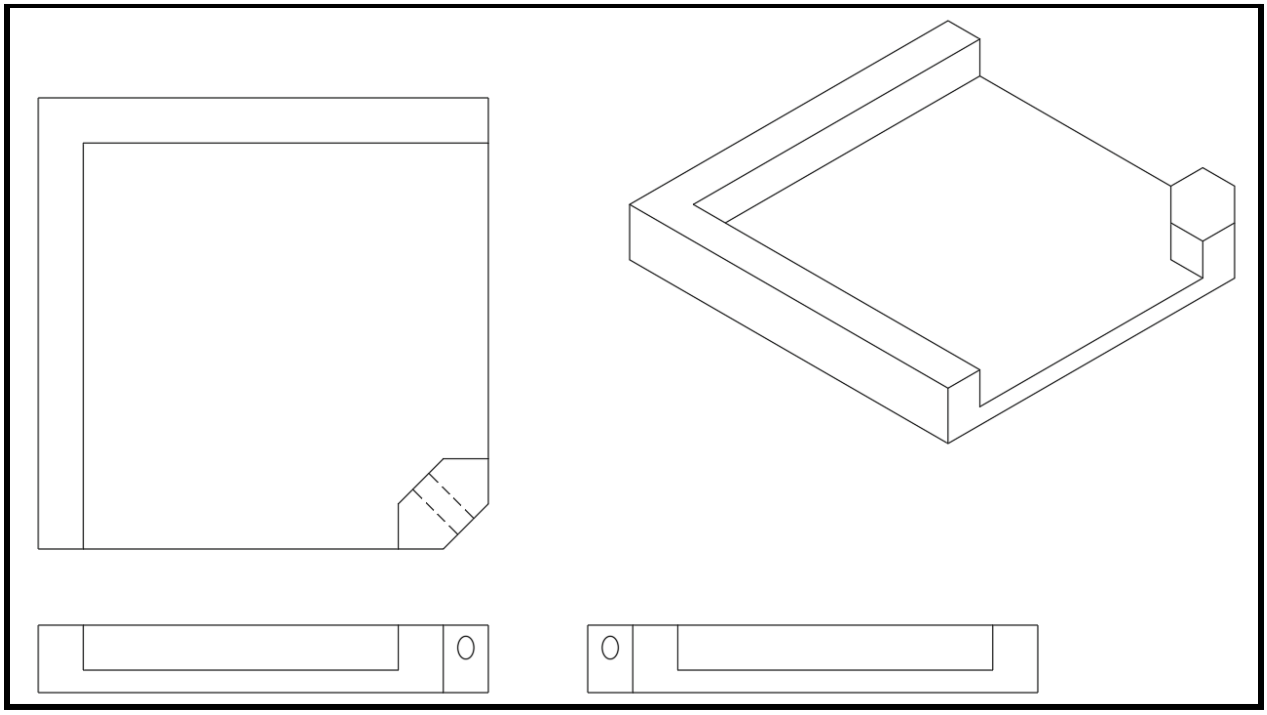

Handle/crank:

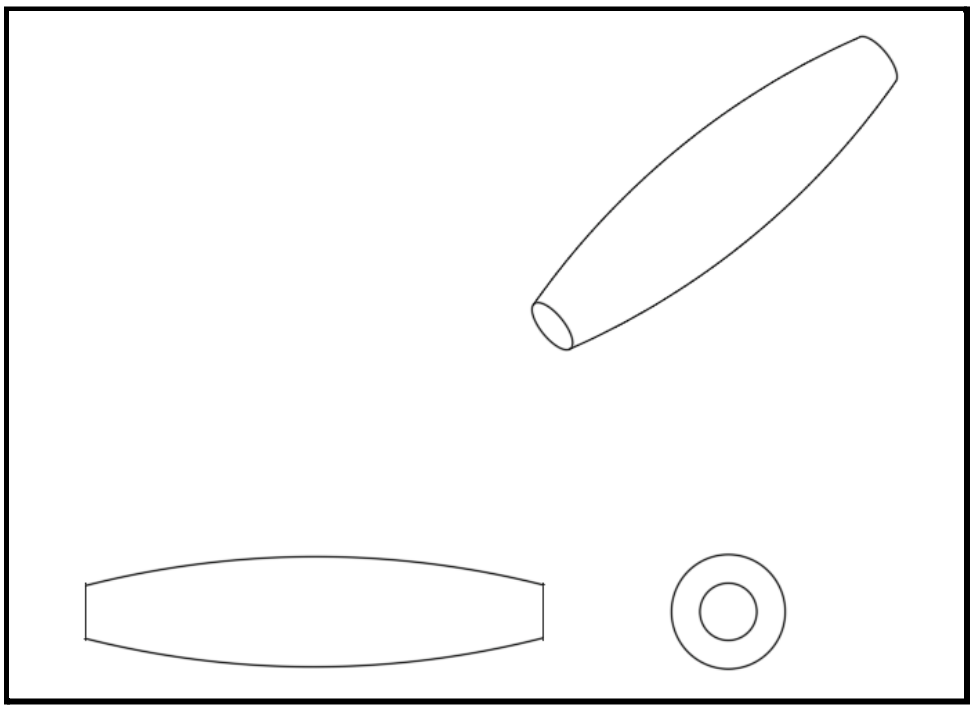

Moving arm/head/brace:

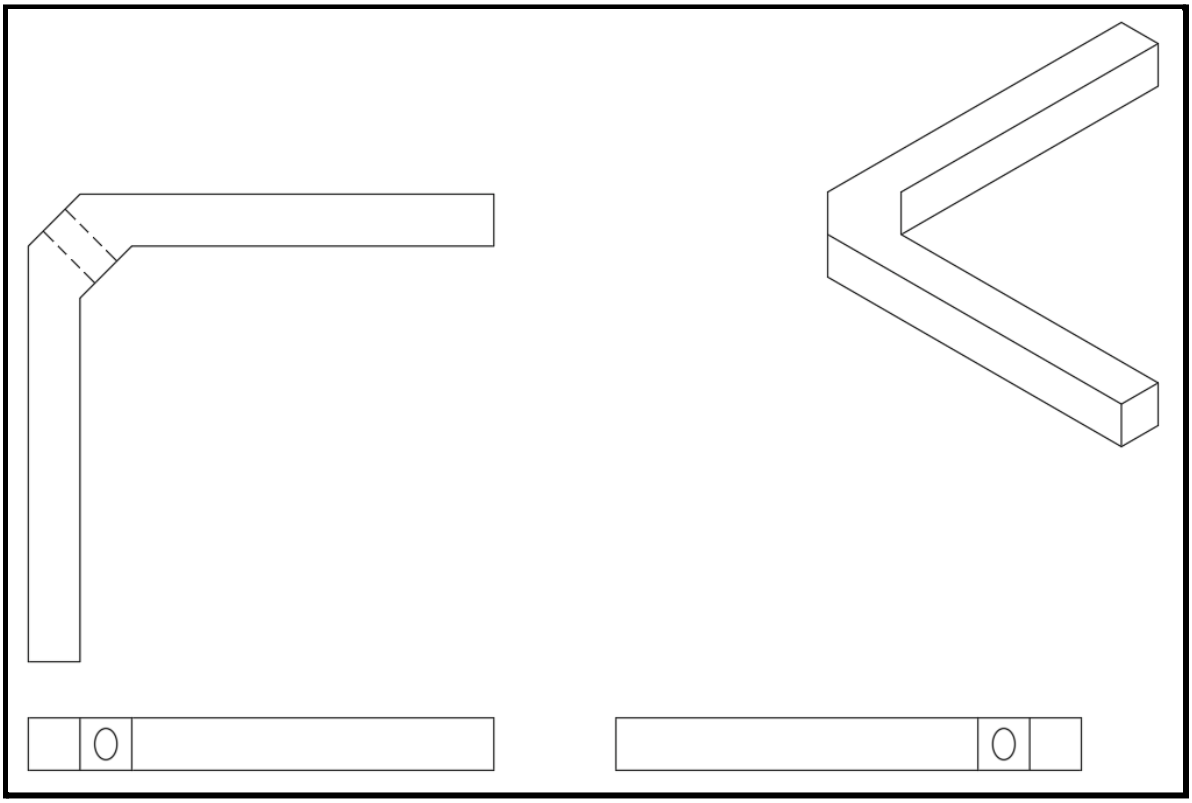

Screw:

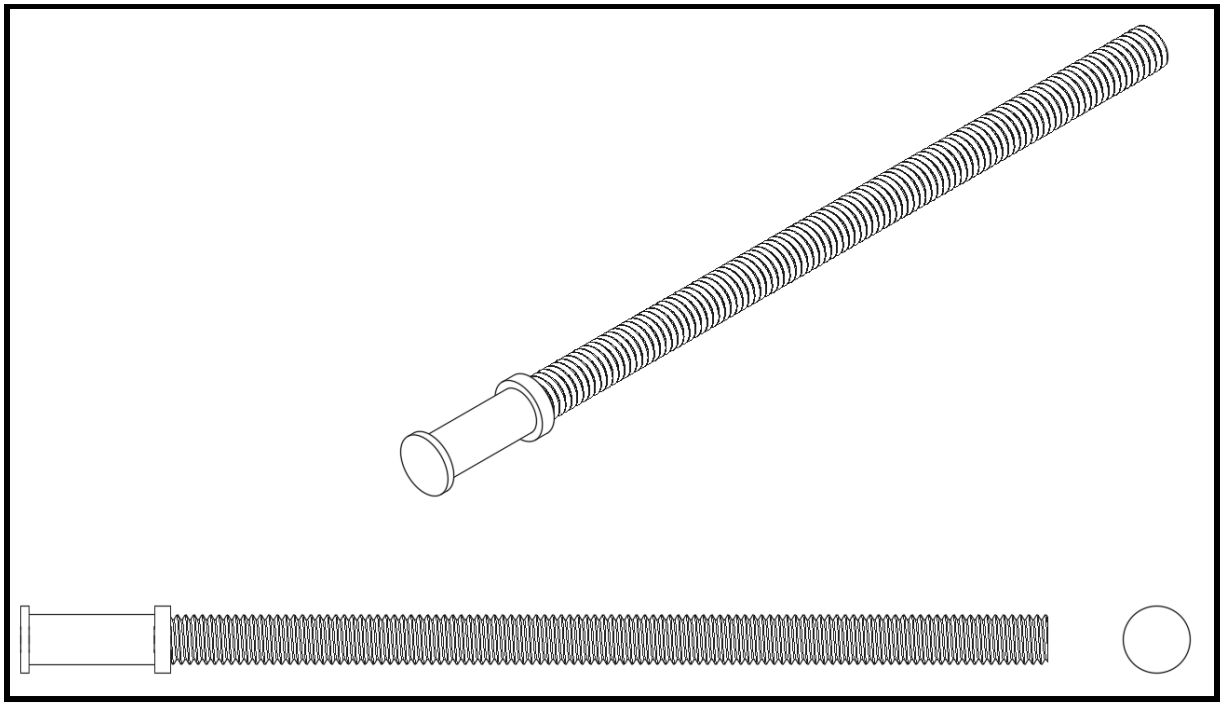

Design Configuration

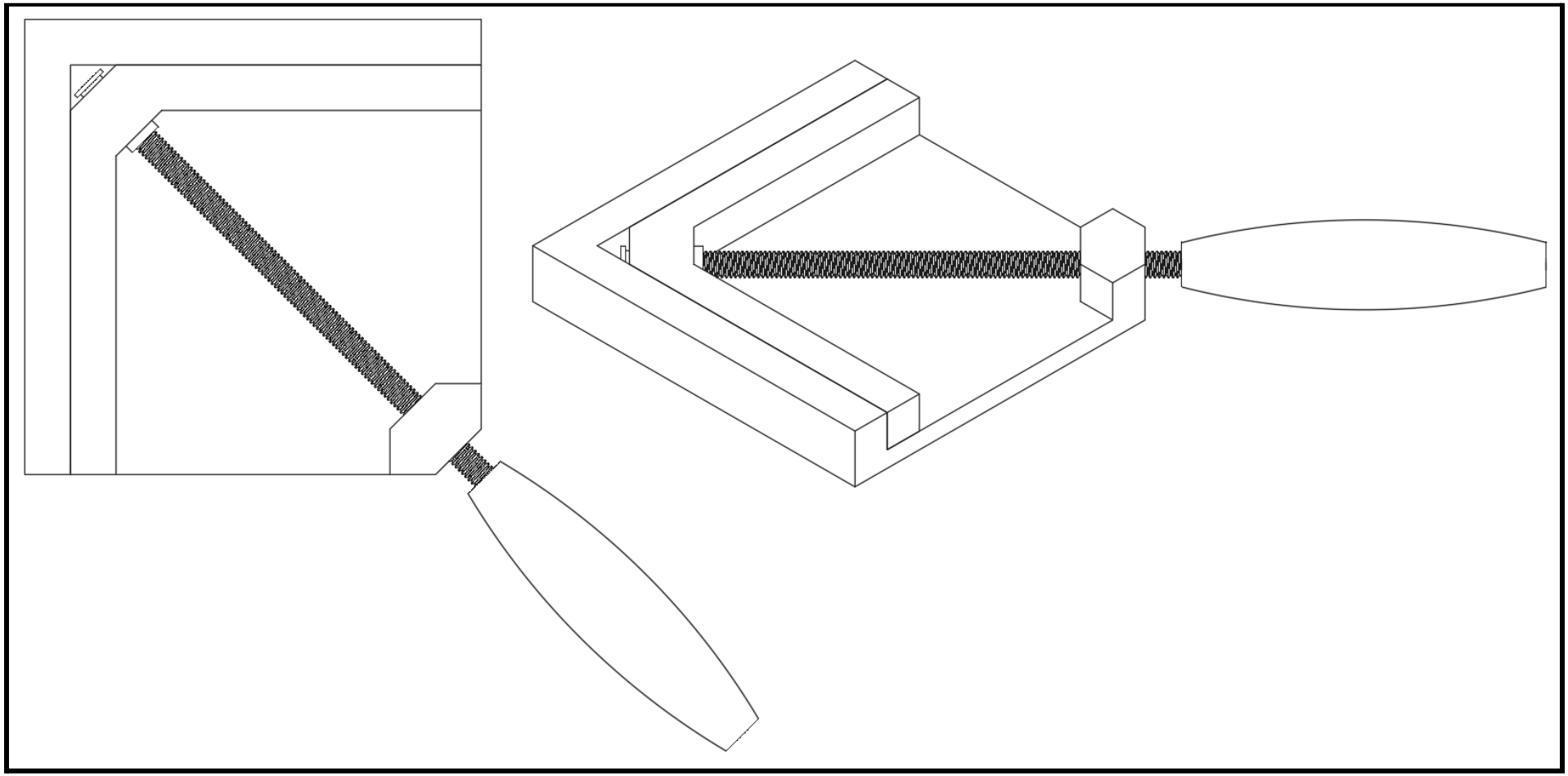

Hand-Drawn Orthographic Projection of Chosen Configuration

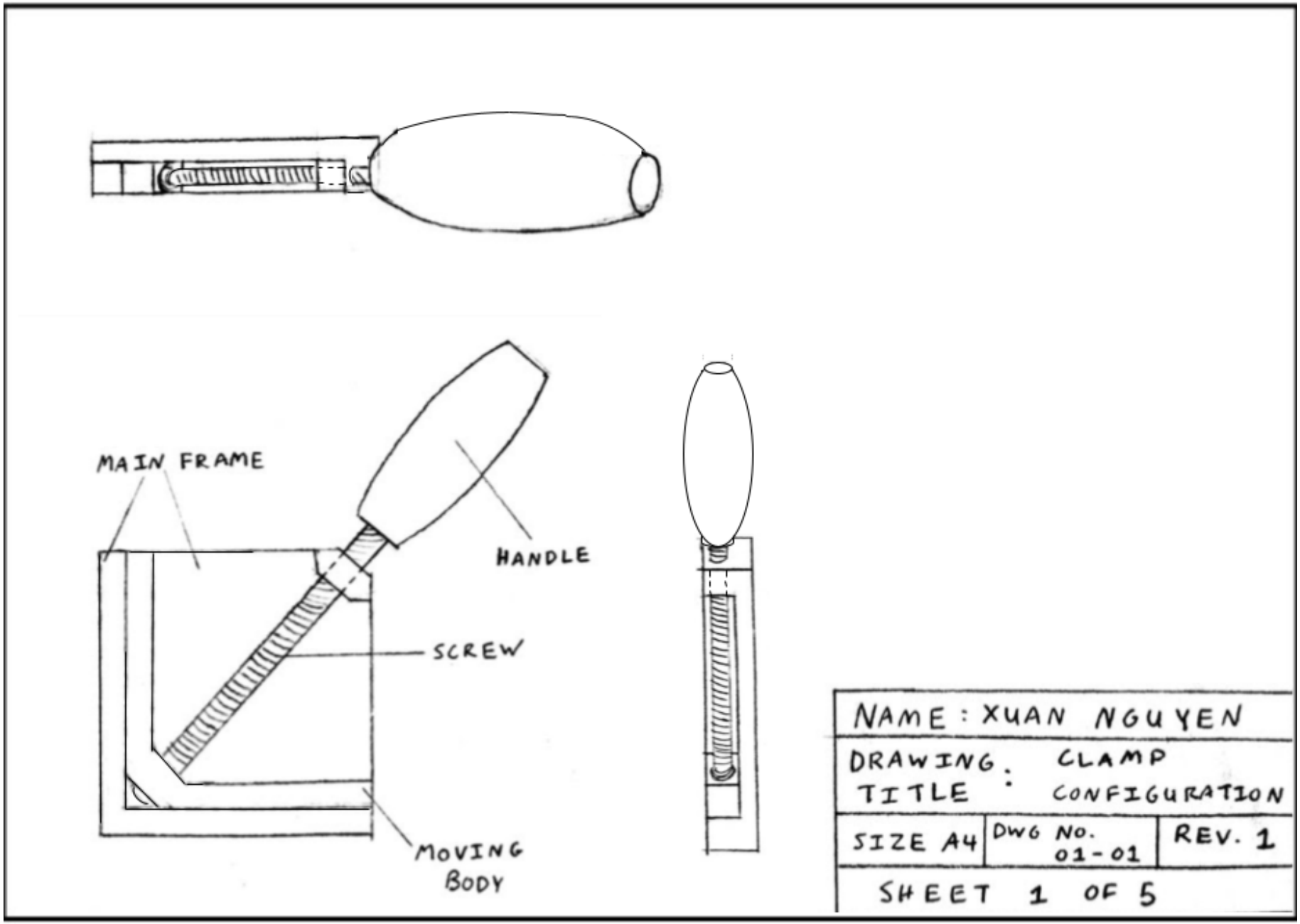

Hand-Drawn Orthographic Projection Layout of Each Component (4 components total)

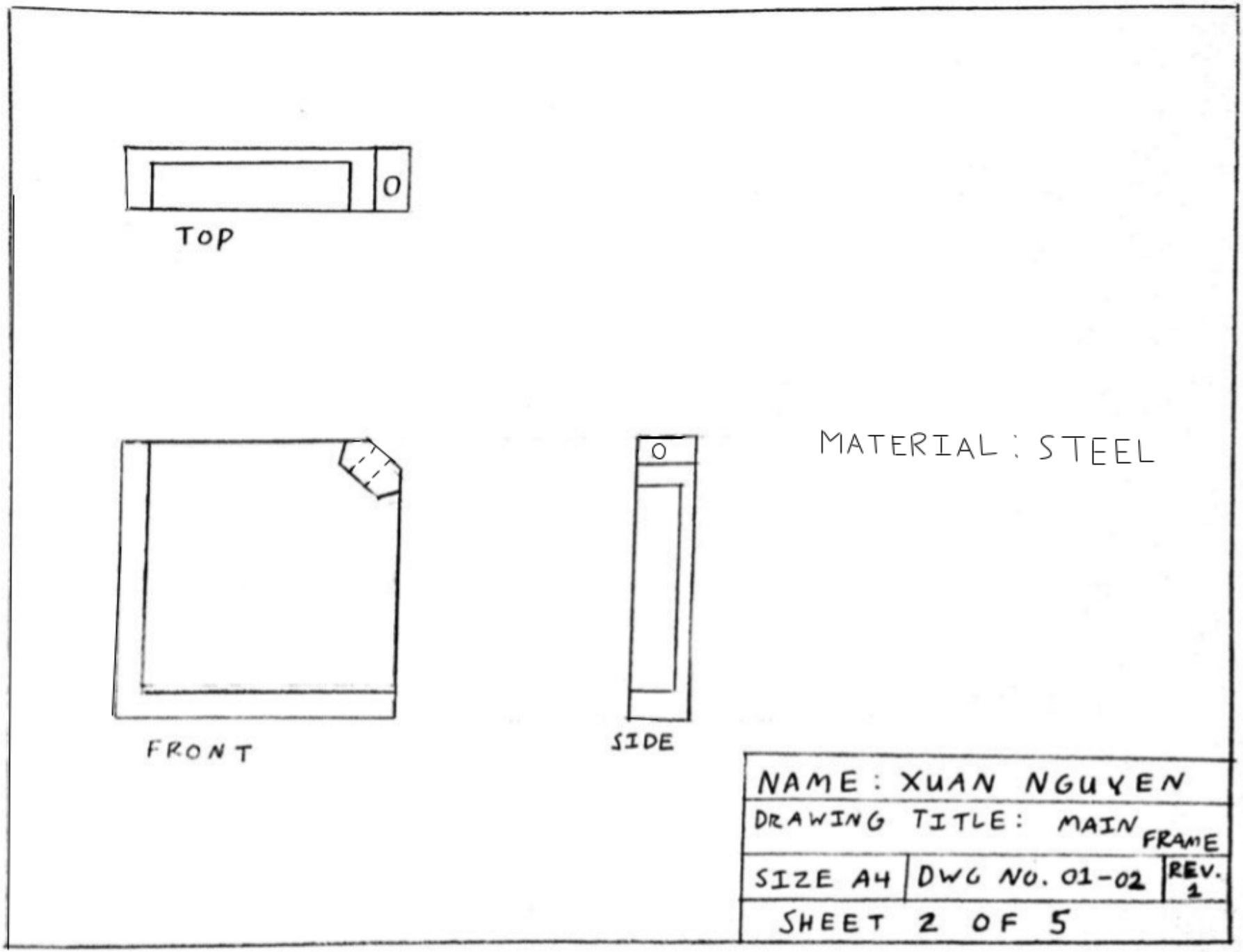

MATERIAL : WOOD

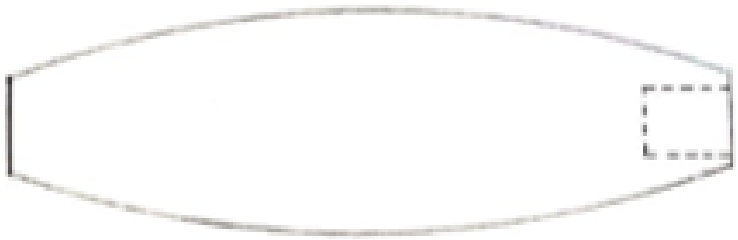

TOP / FRONT

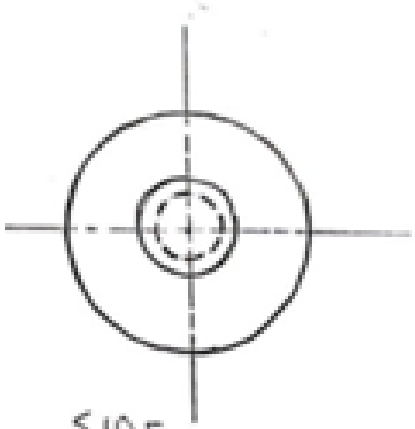

SIDE

NAME YAZAN ZEIDAT		
DRAWING TITLE HANDLE / CRANCK		
SIZE A4	DWG NO 01-03	REV 1
SHEET 3 OF 5		

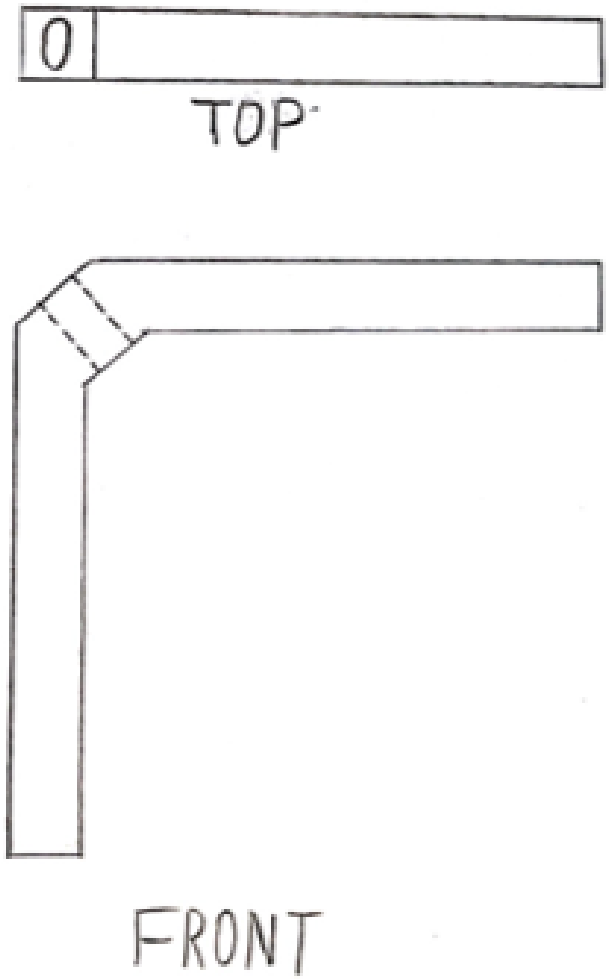

MATERIAL: STEEL

NAME YAZAN ZEIDAT		
DRAWING TITLE MOVING ARM		
SIZE A4	DWG NO 01-04	REV 1
SHEET 4 OF 5		

MATERIAL: STEEL

TOP / FRONT

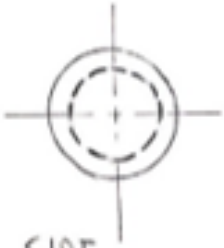

SIDE

NAME YAZAN ZEIDAT		
DRAWING TITLE SCREW		
SIZE A4	DWG NO 01-05	REV 1
SHEET		5 OF 5

5 Detail Design (Deliverable 3 Drawings - Fusion 360)

3D Isometric Rendering of Final Design

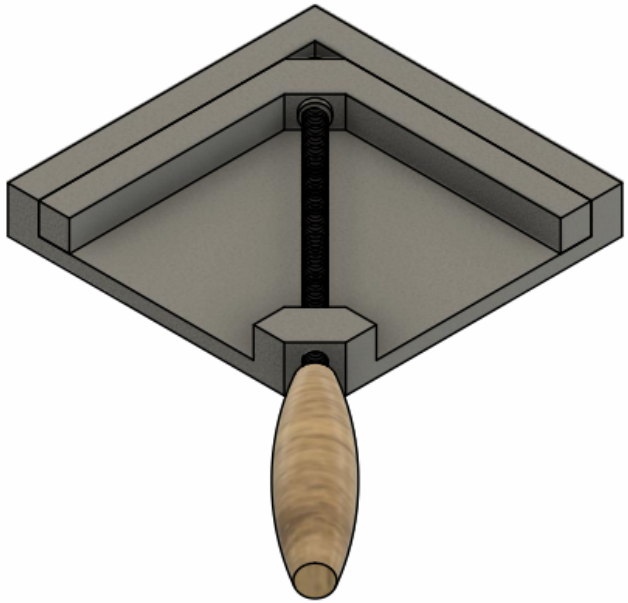

Material: Wood / Stainless Steel	Created by: Yazan Zeidat 101247504	Group: XYZ	
	Last Update: 18/02/2022	DWG No.: 01	
	Title: Isometric Views	Scale: 1:1	Size: A3
		Rev.: REV : 1	Sheet: 1/6

Orthographic 3rd-angle projection of each components (4 total)

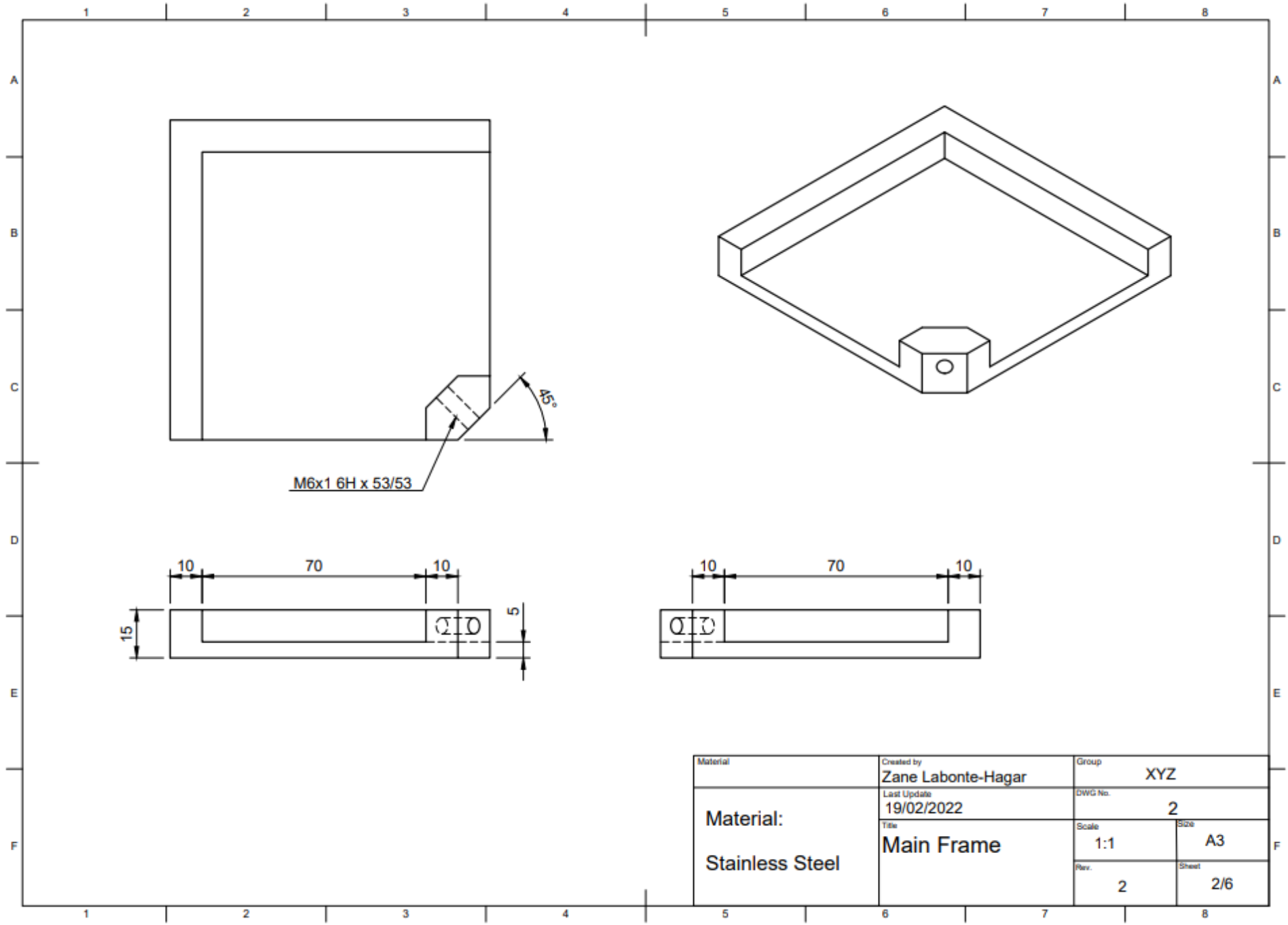

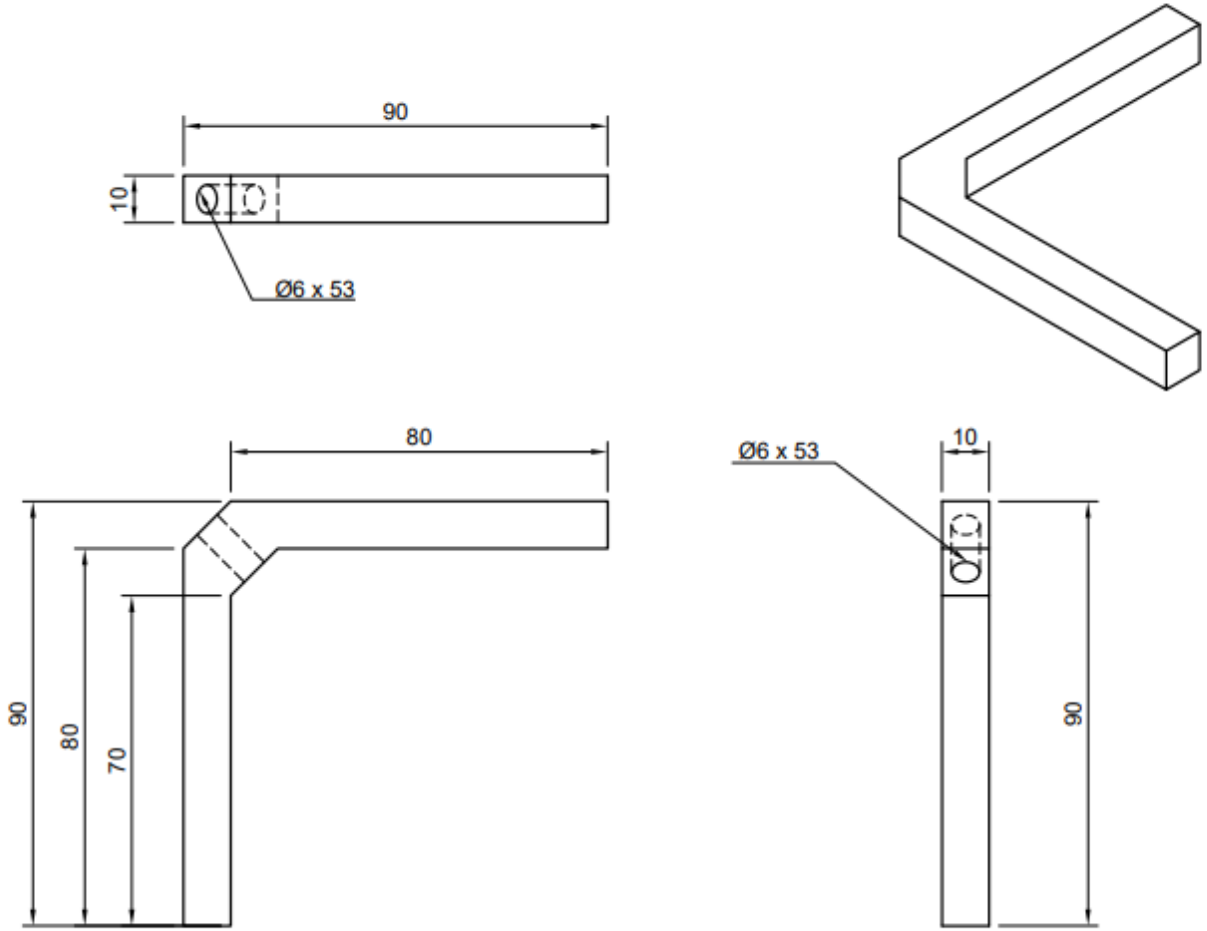

Dept.	Technical reference	Created by: Xuan Nguyen 2/18/2022	Group XYZ
Material: Stainless Steel		Size: A3	Scale: 1:1
		Title: Moving Body	DWG No. 03
			Rev. 1 / Date of issue Feb. 18, 2022 / Sheet 3/6

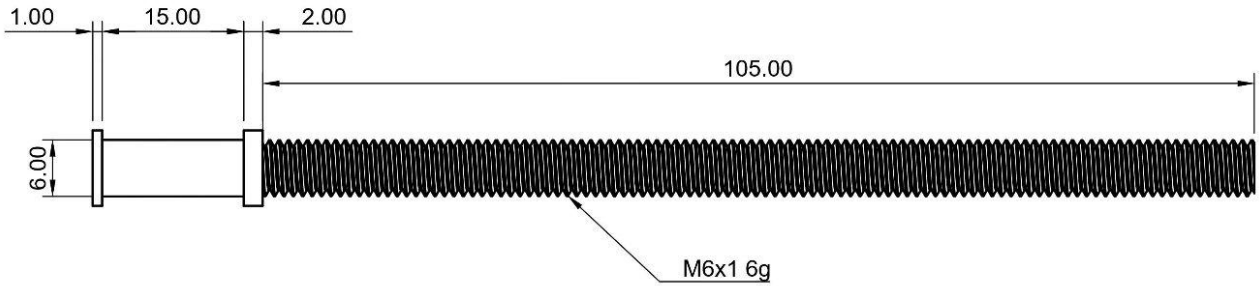

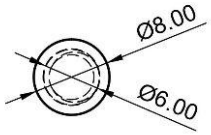

ALL DIMENSIONS IN MM

Material: Stainless Steel	Created by: Zane Labonte-Hagar	Group: XYZ	
	Last Update: 18/02/2022	DWG No.: 4	
	Title: Clamp Rod	Scale: 2:1	Size: A3
		Rev.: 2	Sheet: 4/6

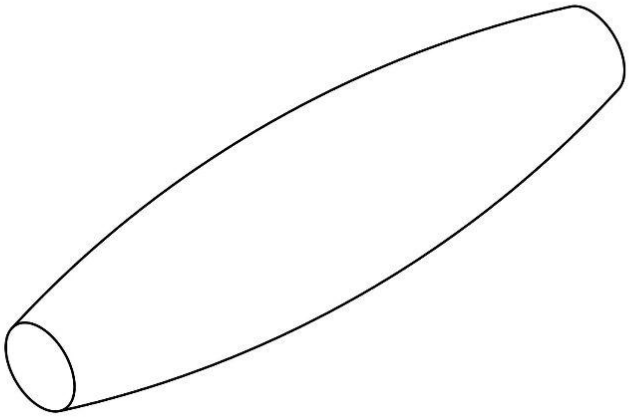

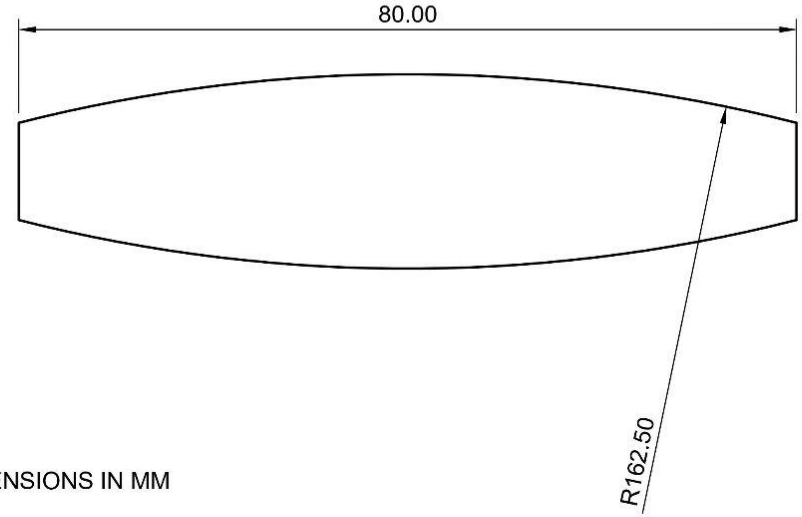

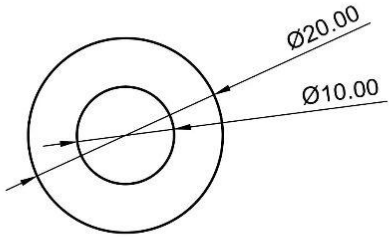

ALL DIMENSIONS IN MM

CURVE OF HANDLE DEFINED BY
LENGTH OF ROD AND RADIUS OF CURVE

Material: HARD WOOD	Created by: Zane Labonte-Hagar	Group: XYZ	
	Last Update: 14/02/2022	DWG No.: 5	
	Title: Clamp Handle	Scale: 2:1	Size: A3
		Rev.: 2	Sheet: 5/6

Assembly Drawing

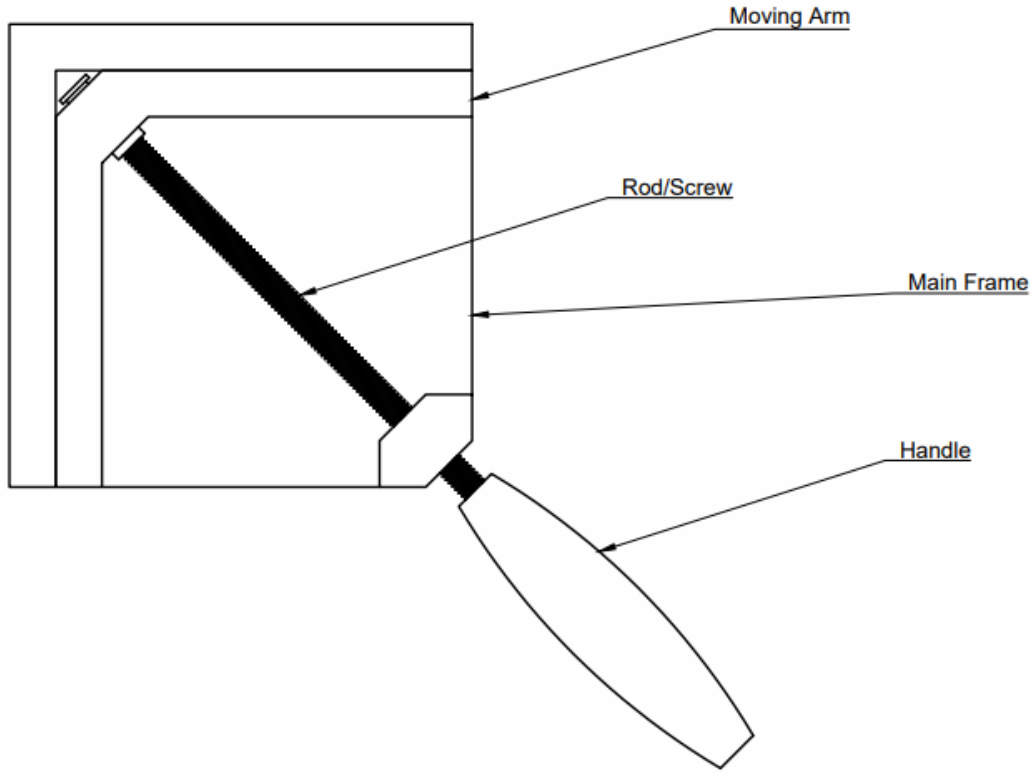

Material: Stainless steel/ Wood	Created by: Yazan Zeidat 101247504	Group: XYZ	
	Last Update: 18/02/2022	DWG No.: 06	
	Title: Clamp Assembly Drawing	Scale: 1:1	Size: A3
		Rev.: REV: 1	Sheet: 6 / 6

6 Conclusions and Recommendations

Summarize your lessons learned, team performance (team work process), and how your team would improve their visual communication style/tools in the future. (max 250 words).

One of the main lessons our team learned was the importance of communication. We came to understand this was a vital element of our team early on, and made sure to always be explanatory in our critiques and suggestions, as well as to always communicate where we were in the process of our individual work. Additionally, we learned that hand drawn designs and drawings can take longer than expected, which needs to be taken into account when planning our timeline.

Our team process was fairly efficient and productive. Generally, after the previous deliverable was finished, we had a brief meeting to fully understand the requirements of the next deliverable. At that time we would also decide on who worked on what tasks, dividing up the deliverable into individual components for us to work on. Once people had their work done, they typically share the work with the other team members to receive constructive feedback, and proceed to make any necessary changes. Our individual work was punctual and done early enough for the work to be peer reviewed and compiled into the final product in a timely manner.

In the future, we aim to improve our digital drawing comprehension in order to create CAD drawing more efficiently. Although hand drawn sketches and technical drawings are not as prevalent, we would also like to improve the general style and quality of our hand drawings, making them appear more professional and clean.

7 References

[1] E. Cyr, Lecture 1, Online Available; https://brightspace.carleton.ca/d2l/le/content/117479/viewContent/2469612/View, [Accessed: 18-February-2022]

[2] M. O. -, By, -, and M. Omotoso, “What is a technical drawing in fashion design?,” Fashion Insiders, 09-Mar-2021. [Online]. Available: https://fashioninsiders.co/toolkit/top-tips/what-is-technical-drawing/. [Accessed: 19-Feb-2022].

[3] “Sage journals: Your gateway to world-class research journals.” [Online]. Available: https://journals.sagepub.com/doi/abs/10.1177/0306419017744156?journalCode=ijja. [Accessed: 19-Feb-2022].

Appendices

Team XYZ - Group 29 - Weekly Meeting Minutes

Meeting #1 (January 17, 2022)

Name	**Student Number**	**Attendance**	**Signature**
Xuan Nguyen	101228417	Present	
Yazan Zeidat	101247504	Present	
Zane Labonté-Hagar	101239002	Present	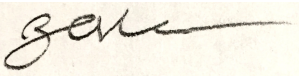

Completed this week	Planned to be completed by next week
• Reached out / got in contact with each other • Made a team group chat on Discord to discuss planning and to share files • Chosen our clamps	• Take pictures of clamps and put them in a drawing template • Take pictures of clamp components and put them in a drawing template • Finish hand-drawn orthographic projection for one of the clamps

Meeting #2 (January 24, 2022)

Name	Student Number	Attendance	Signature
Xuan Nguyen	101228417	Present	Xuan Nguyen
Yazan Zeidat	101247504	Present	
Zane Labonté-Hagar	101239002	Present	

Completed this week	Planned to be completed by next week
• Submitted Deliverable 1 • Chosen which clamp to focus on	• Design Brief for a new Clamp design • Design concepts for a component that performs a function

Meeting #3 (January 31, 2022)

Name	Student Number	Attendance	Signature
Xuan Nguyen	101228417	Present	Xuan Nguyen
Yazan Zeidat	101247504	Present	
Zane Labonté-Hagar	101239002	Present	

Completed this week	Planned to be completed by next week
● Design Brief for an improved clamping device ○ Short statement ○ 3 requirements ○ 2 constraints ● Brainstorm some design concepts	● Create 3 configurations of our design ● Build a design matrix (weighted trade study) to select the best concept ● Draw an orthographic projection of final concept ● Draw an orthographic projection for each component of final concept

Meeting #4 (February 7, 2022)

Name	Student Number	Attendance	Signature
Xuan Nguyen	101228417	Present	
Yazan Zeidat	101247504	Present	
Zane Labonté-Hagar	101239002	Present	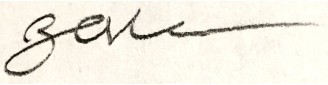

Completed this week	Planned to be completed by next week
● Submitted Deliverable 2 portfolio ○ Drawings reviewed by peers ● Created a Fusion 360 file for the chosen configuration	● Fully defined solid model of each component using Fusion 360 ● Assemble components into a combined final product. ● 3D isometric rendering of final design (two views)

Meeting #5 (February 14, 2022)

Name	Student Number	Attendance	Signature
Xuan Nguyen	101228417	Present	
Yazan Zeidat	101247504	Present	
Zane Labonté-Hagar	101239002	Present	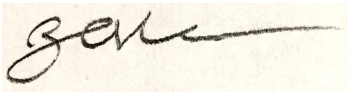

Completed this week	Planned to be completed next week
● Finished solid model of the entire clamp on Fusion 360. ● Selected two views that showcase the presentation of the design	● Orthographic 3rd-angle projection drawings for each of the components ● Assembly drawing of final product within Fusion 350