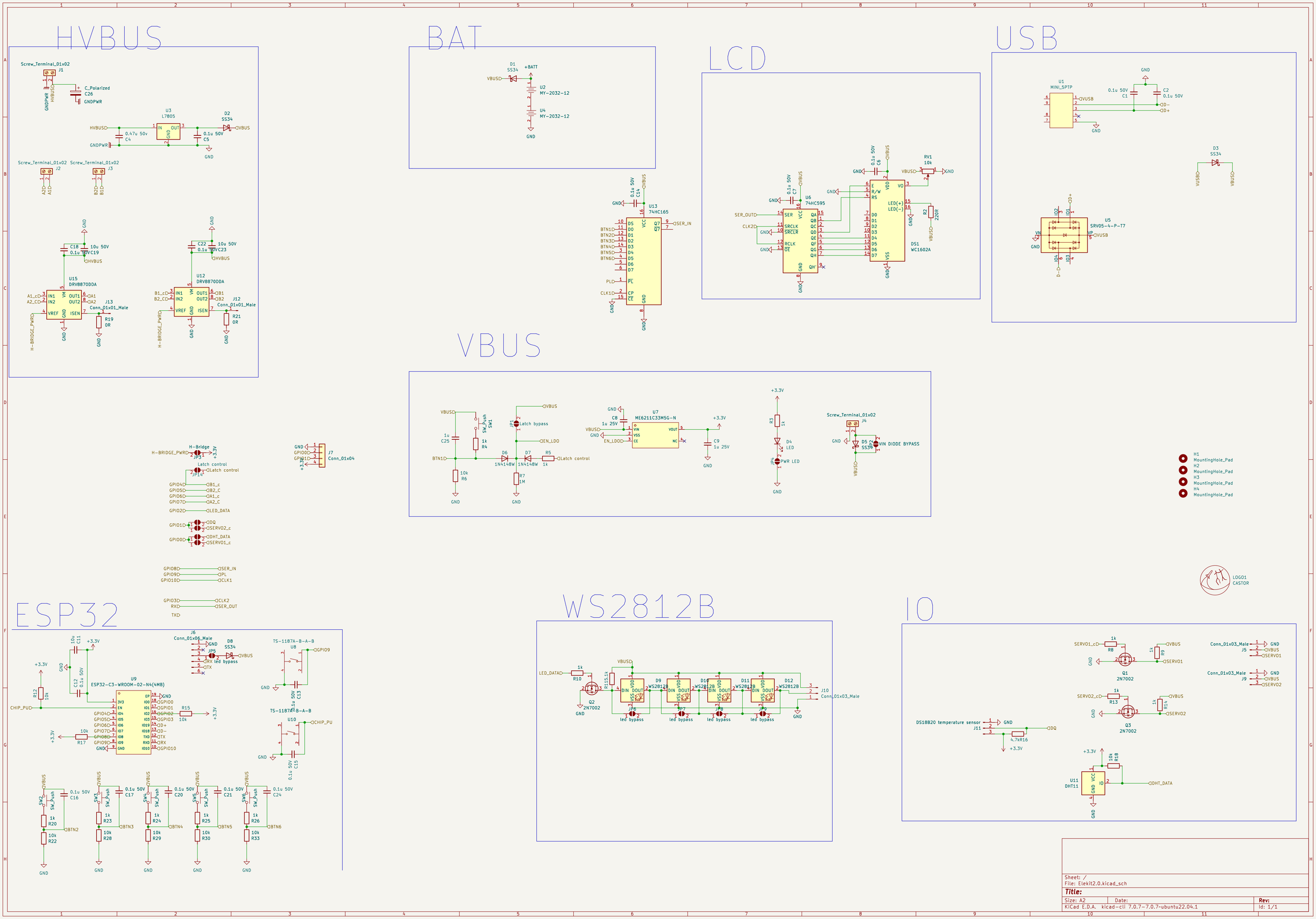

Sheet: /
File: Elekit2.0.kicad_sch

Title:

Size: A2	Date:	Rev:
KiCad E.D.A. kicad-cli 7.0.7-7.0.7-ubuntu22.04.1		Id: 1/1