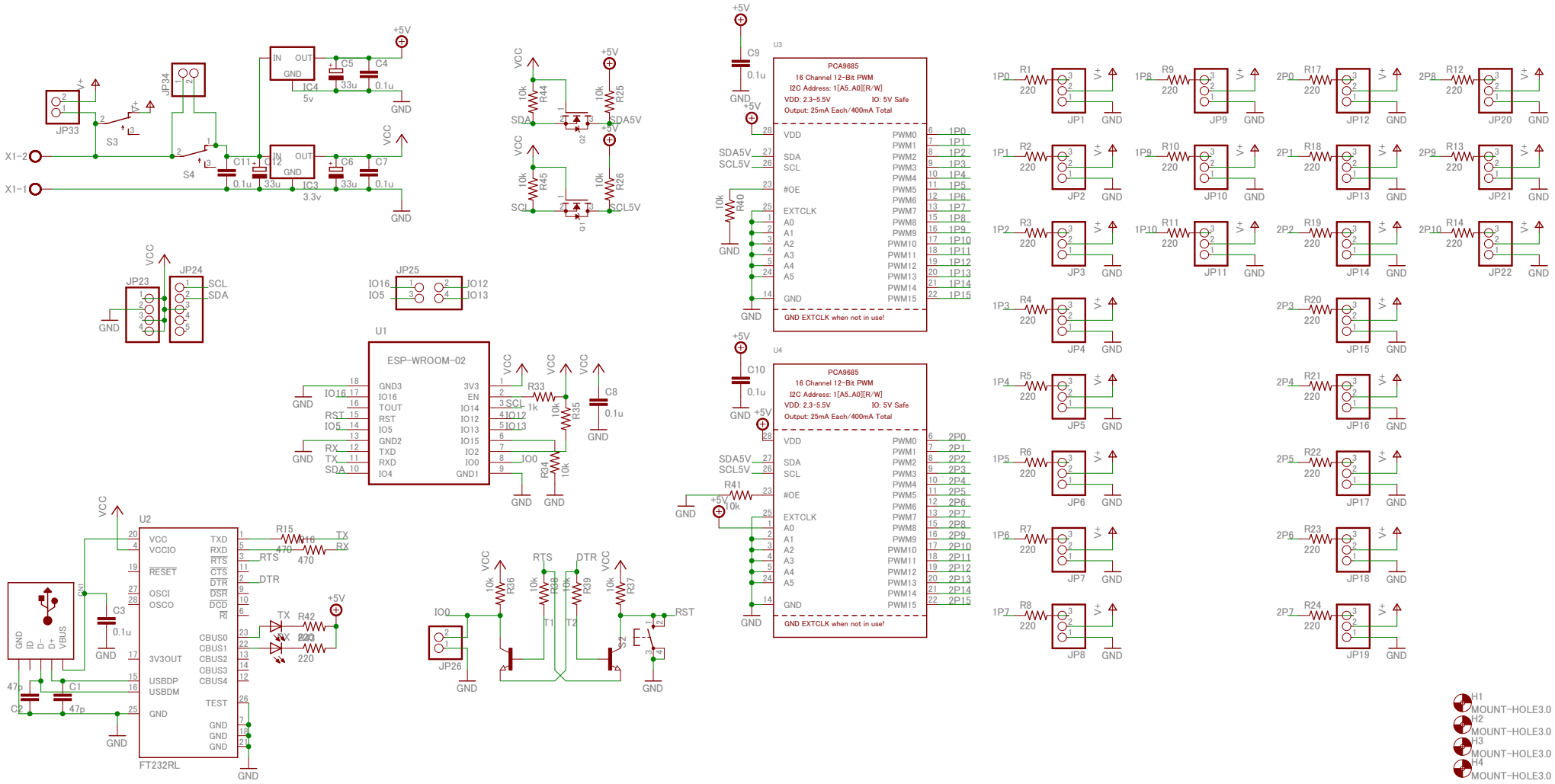

Y-modify

AX-board

AX-03r

not saved!

Sheet: 1/1