A Generic Battery Model for the Dynamic Simulation of Hybrid Electric Vehicles

Olivier Tremblay, *Member IEEE,* Louis-A. Dessaint, *Senior Member IEEE,* and Abdel-Illah Dekkiche
Electrical Engineering Department, Ecole de Technologie Superieure

***Abstract*— This paper presents an easy-to-use battery model applied to dynamic simulation software. The simulation model uses only the battery State-Of-Charge (SOC) as a state variable in order to avoid the algebraic loop problem. It is shown that this model, composed of a controlled voltage source in series with a resistance, can accurately represent four types of battery chemistries. The model's parameters can easily be extracted from the manufacturer's discharge curve, which allows for an easy use of the model. A method is described to extract the model's parameters and to approximate the internal resistance. The model is validated by superimposing the results with the manufacturer's discharge curves. Finally, the battery model is included in the SimPowerSystems (SPS) simulation software and is used in the Hybrid Electric Vehicle (HEV) demo. The results for the battery and for the DC-DC converter are analysed and they show that the model can accurately represent the general behaviour of the battery.**

I. Introduction

The near-future technologies related to hybrid electric vehicles (HEV) are the most promising alternatives to cope with the reduction of greenhouse gases in the car industry. In particular, plug-in HEV and vehicle-to-grid (V2G) concepts will have a tremendous impact not only on the reduction of greenhouse gases but also on electricity distribution systems. Above all, these new technologies will heavily depend on battery packs. It is therefore important to develop accurate battery models that can conveniently be used with simulators of power systems and on-board power electronic systems.

There are basically three types of battery models reported in the literature, specifically: experimental, electrochemical and electric circuit-based. Experimental and electrochemical models are not well suited to represent cell dynamics for the purpose of state-of-charge (SOC) estimations of battery packs. However, electric circuit-based models can be useful to represent electrical characteristics of batteries. The most simple electric model consists of an ideal voltage source in series with an internal resistance [1]. This model, however, does not take into account the battery SOC. An other model is based on an open circuit voltage in series with resistance and parallel RC circuits with the so-called Warburg impedance [2]. The identification of all the parameters of this model is based on a rather complicated technique called impedance spectroscopy [3]. Shepherd developed an equation to describe the electrochemical behaviour of a battery directly in terms of terminal voltage, open circuit voltage, internal resistance, discharge current and state-of-charge [4], and this model is applied for discharge as well as for charge. The Shepherd model is interesting but causes an algebraic loop problem in the closed-loop simulation of modular models. Battery models with only SOC as a state variable are discussed in [5] [6]. These models are very similar to Shepherd's but don't produce an algebraic loop.

In this paper, a model using only SOC as a state variable is chosen in order to accurately reproduce the manufacturer's curves for the four major types of battery chemistries. These four types are: Lead-Acid, Lithium-Ion (Li-Ion), Nickel-Cadmium (NiCd) and Nickel-Metal-Hydride (NiMH). The paper is divided into three sections. In the first section, the proposed model and its parameters are described. Furthermore, a method is presented to show how to determine the model parameters from the manufacturer's discharge curves of the battery. In the second section, discharge curves are obtained by simulation and validated with the manufacturer's datasheets. The third section contains an example of an application where the battery model integrated to the SimPowerSystems (SPS) is used in the complete simulation of an HEV power train. The paper ends with a conclusion.

II. The Battery Model

The battery is modelled using a simple controlled voltage source in series with a constant resistance, as shown in Fig.
1. This model assumes the same characteristics for the charge and the discharge cycles. The open voltage source is calculated with a non-linear equation based on the actual SOC of the battery.

A. The Battery Model

The controlled voltage source is described by equation (1):

$$E = E_0 - K\frac{Q}{Q - \int idt} + Aexp(-B \cdot \int idt) \quad (1)$$

$$V_{batt} = E - R \cdot i \quad (2)$$

where

E = no-load voltage (V)
E_0 = battery constant voltage (V)
K = polarisation voltage (V)
Q = battery capacity (Ah)

O. Tremblay, L.-A. Dessaint and A. Dekkiche are members of the Groupe de Recherche en Electronique de Puissance et Commande Industrielle (GREPCI), Ecole de Technologie Superieure, Universite du Quebec, Montreal, QC H3C 1K3, Canada (e-mail: olivier.tremblay.1@ens.etsmtl.ca; dessaint@ele.etsmtl.ca; adekkiche@gmail.com).

0-7803-9761-4/07/$20.00 ©2007 IEEE

Authorized licensed use limited to: Xi'an Jiaotong-Liverpool University. Downloaded on January 30,2026 at 06:56:12 UTC from IEEE Xplore. Restrictions apply.

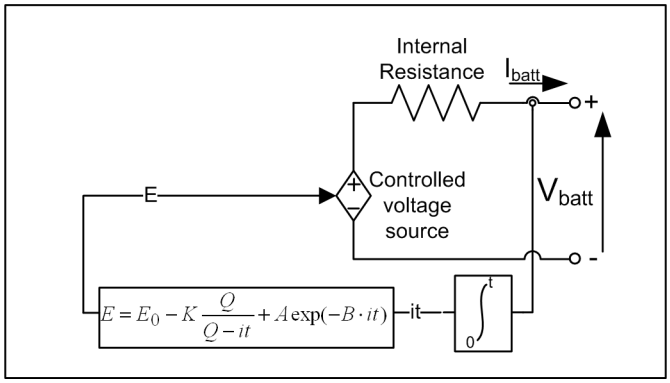

Fig. 1. Non-Linear battery model

$\int idt$ = actual battery charge (Ah)
A = exponential zone amplitude (V)
B = exponential zone time constant inverse $(Ah)^{-1}$
V_{batt} = battery voltage (V)
R = internal resistance (Ω)
i = battery current (A)

The original Shepherd model has a non-linear term equal to $K\frac{Q}{Q-\int idt}i$. This term represents a non-linear voltage that changes with the amplitude of the current and the actual charge of the battery. So when the battery is almost completely discharged and no current is flowing, the battery voltage increases to nearly E_0. As soon as a current circulates again, the voltage falls abruptly. This behaviour is representative of a real battery but the mathematical model which makes it possible to represent this phenomenon causes an algebraic loop and simulation instability.

The proposed model (equation 1) represents a non-linear voltage which depends uniquely on the actual battery charge. This means that when the battery is almost completely discharged and that no current is flowing, the voltage will be nearly 0. This model yields accurate results and also represents the behaviour of the battery.

The proposed model is based on specific assumptions and has limitations:

1) Model assumptions:

- The internal resistance is supposed constant during the charge and discharge cycles and doesn't vary with the amplitude of the current.
- The model's parameters are deduced from the discharge characteristics and assumed to be the same for charging.
- The capacity of the battery doesn't change with the amplitude of the current (No Peukert effect).
- The temperature doesn't affect the model's behaviour.
- The Self-Discharge of the battery is not represented.
- The battery has no memory effect.

2) Model limitations:

- The minimum No-Load battery voltage is 0 V and the maximum battery voltage is not limited.
- The minimum capacity of the battery is 0 Ah and the maximum capacity is not limited. Therefore, the maximum SOC can be greater than 100% if the battery is overcharged.

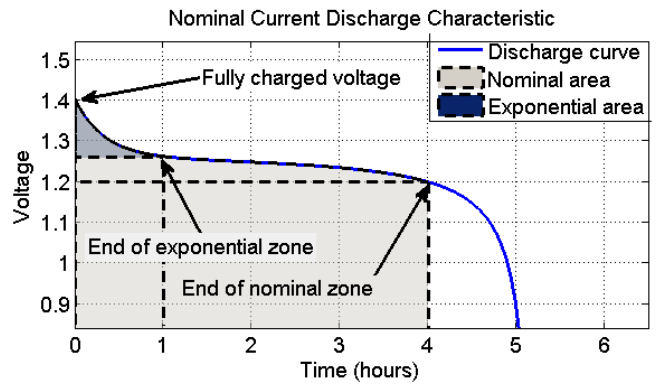

Fig. 2. Typical discharge curve

B. Extracting Model Parameters

The model can accurately represent the behaviour of many battery types, provided the parameters are well determined. The main feature of this battery model is that the parameters can easily be deduced from a manufacturer's discharge curve. Fig. 2 shows a typical discharge characteristic, for a 1.2V 6.5 Ah Nickel-Metal-Hydrid cell. The discharge curve is for a constant current of 1.3A (0.2 C rate[1]).

1) Internal resistance approximation: Internal resistance is very important in order to adequately represent the voltage drop caused by a current variation in the battery. The internal impedance is generally specified in the manufacturer's datasheet. Tests have determined that the internal impedance provided by the manufacturer doesn't allow, for the proposed model, to accurately represent the potential difference caused by the variation of the current. For example, the resistance described on the datasheet of the Panasonic HHR650D3 NiMH battery is $2m\Omega$ but it was found that the resistance that best fits the three current curves (Fig. 3[2]) is $4.6m\Omega$.

It is therefore proposed to establish an analytical relation linking the internal resistance of the model to the nominal voltage and the rated capacity of the battery. Internal resistance affects the output voltage of the battery, thus the efficiency. Let us examine how the efficiency (η) varies with the capacity and the nominal voltage of the battery:

$$\eta = 1 - \frac{I_{nom} \cdot R \cdot I_{nom}}{V_{nom} \cdot I_{nom}} \tag{3}$$

The rated current is the one used for the nominal discharge curve, i.e.:

$$I_{nom} = Q_{nom} \cdot 0.2/1hr \tag{4}$$

So,

$$\eta = 1 - \frac{0.2 \cdot R \cdot Q_{nom}}{V_{nom}} \tag{5}$$

[1]The 'C rate' is the current used to discharge the battery. It is defined by the nominal capacity of the battery divided by one hour.

[2]Directly extracted from the Panasonic HHR650D3 NiMH datasheet

Authorized licensed use limited to: Xi'an Jiaotong-Liverpool University. Downloaded on January 30,2026 at 06:56:12 UTC from IEEE Xplore. Restrictions apply.

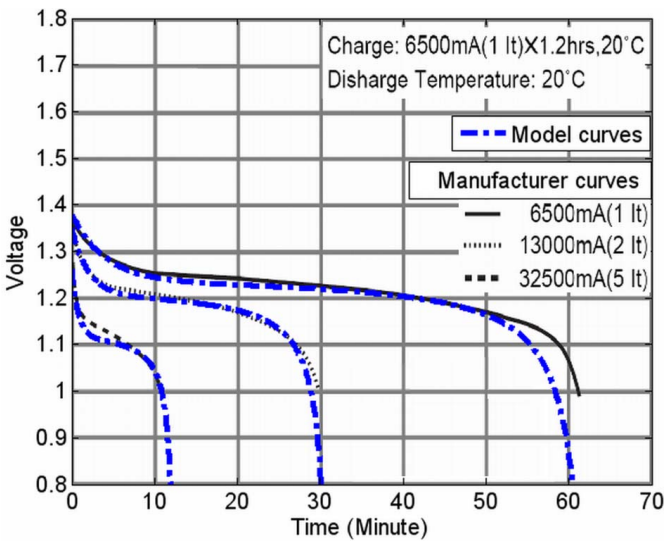

Fig. 3. Discharge curve for the NiNM Panasonic HHR650D3 battery

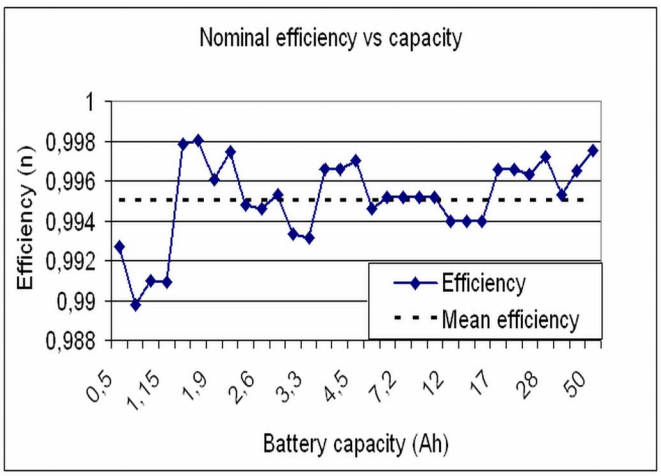

Fig. 4. Efficiency at nominal current vs battery capacity

More than 30 empirical tests based on various nominal capacities have established the internal resistance necessary so that the model's discharge curves fit those of the manufacturer. With these resistance values, the efficiency (for a standardized cell of 1.2 volts) was calculated and the results are presented in Fig. 4.

Fig. 4 shows that the average efficiency of 99.5%, for a 1.2 volts cell, is an excellent approximation making it possible to deduce internal resistance:

$$R = V_{nom} \cdot \frac{1-\eta}{0.2 \cdot Q_{nom}} \tag{6}$$

This method is a starting point to establish the internal resistance when no other information is available.

2) Model parameters: The three necessary points used to extract the model parameters are (Fig. 2): the fully charged voltage, the end of the exponential zone (voltage and charge) and the end of the nominal zone (voltage and charge). The exponential part ($Aexp(-B \cdot it)$) is calculated with the first two points as follows:

A: voltage drop during the exponential zone (V)
$A = E_{Full} - E_{Exp}$
$\Rightarrow A = 1.4V - 1.25V = 0.15V$

3/(B): Charge at the end of exponential zone (Ah)
$B = \frac{3}{Q_{Exp}}$
$\Rightarrow B = \frac{3}{1.3A \cdot 1h} = 2.308(Ah)^{-1}$

The other parameters are calculated using equation (1). The polarisation voltage K can be deduced from the fully charged voltage (E_{Full}) and the third point (End of nominal zone: Q_{Nom} and E_{Nom}):

$K = \frac{(E_{Full} - E_{Nom} + A(exp(-B \cdot Q_{Nom}) - 1)) \cdot (Q - Q_{Nom})}{Q_{Nom}}$

$\Rightarrow K = \frac{(1.4 - 1.2 + 0.15(exp(-2.31 \cdot 5.2) - 1)) \cdot (6.5 - 5.2)}{5.2}$
$\Rightarrow K = 0.0125(V)$

Then, the voltage constant E_0 is deduced from the fully charged voltage:

$E_0 = E_{Full} + K + Ri - A$
$\Rightarrow E_0 = 1.4 + 0.0125 + 0.0046 \cdot 1.3 - 0.15 = 1.268(V)$

This approach is very general and can be applied to other battery types to obtain the model parameters. Obviously, these parameters are approximate and depend on the precision of the points obtained on the discharge curve.

3) Model parameters for most popular battery types: The same approach can be used to extract parameters for Lead-Acid, Nickel-Cadmium and Lithium-Ion batteries. The parameters found for common battery cells are presented in Table I.

TABLE I
BATTERY PARAMETERS

Type / Parameters	**Lead-Acid** 12V 1.2Ah	**Nickel-Cadmium** 1.2V 1.3Ah	**Lithium--Ion** 3.6V 1Ah	**Nickel-Metal-Hydrid** 1.2V 6.5Ah
$E_0(V)$	12.6463	1.2505	3.7348	1.2848
R (Ω)	0.25	0.023	0.09	0.0046
K (V)	0.33	0.00852	0.00876	0.01875
A (V)	0.66	0.144	0.468	0.144
B $(Ah)^{-1}$	2884.61	5.7692	3.5294	2.3077

III. THE MODEL VALIDATION

The proposed model can therefore represent several types of discharge curves. It is now important to validate whether the obtained parameters properly represent the real behaviour of a battery. There are several methods which can be used to validate the model. Of course, it is possible to validate the model by using other simulation models but the software containing these models is very rare and the parameters they require

Authorized licensed use limited to: Xi'an Jiaotong-Liverpool University. Downloaded on January 30,2026 at 06:56:12 UTC from IEEE Xplore. Restrictions apply.

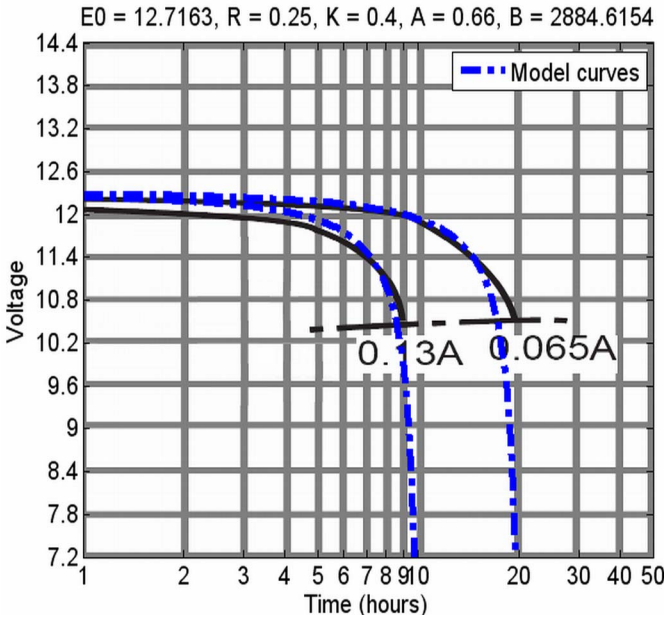

Fig. 5. Lead-Acid battery 12V 1.2Ah

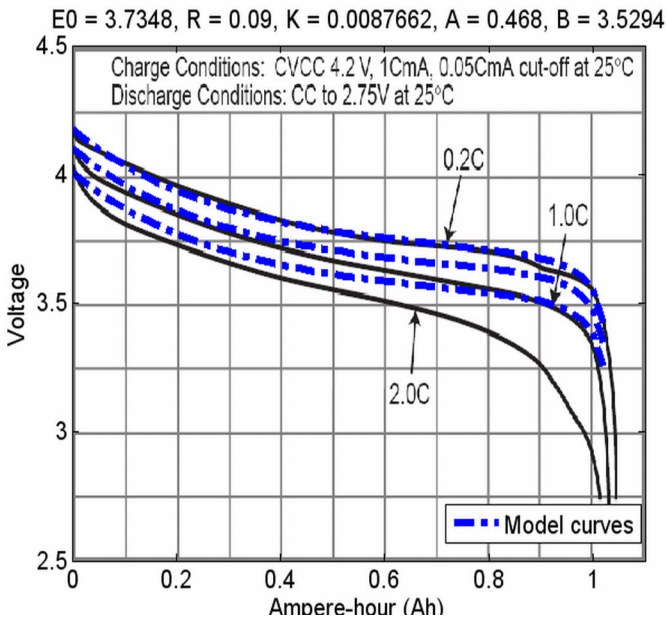

Fig. 7. Lithium-Ion battery 3.6V 1Ah

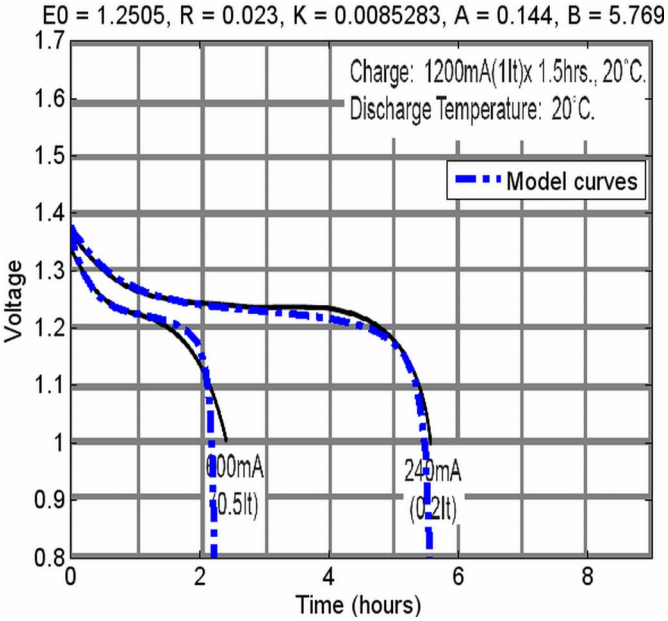

Fig. 6. Nickel-Cadmium battery 1.2V 1.3Ah

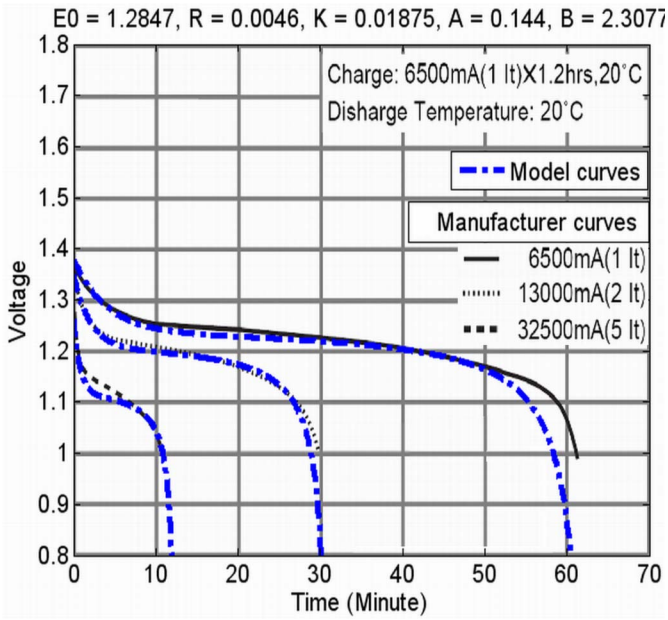

Fig. 8. Nickel-Metal-Hydrid battery 1.2V 6.5Ah

are sometimes difficult to obtain. The suggested validation approach consists of comparing directly (by superposition) the obtained discharge curves using the model with those of the manufacturers.

Figures 5 to 8 show the results for the batteries: Lead-Acid, Li-Ion, NiCd and NiMH. The results are quasi superimposed, which shows that the obtained parameters of this model can represent these batteries correctly, independently of the discharge current used.

IV. Application to Hybrid Electric Vehicle

The model is now integrated in the Matlab-Simulink SimPowerSystems library. A user-friendly interface allows the user to enter standardized parameters, and then the model's required parameters are calculated automatically according to a similar method to that presented in section II-B. The user can then visualize the discharge curve obtained with the parameters and compare it with that of the manufacturer. There are four sets of preset parameters making it possible to represent the behaviour of the batteries determined in section II-B.3. Of course if desired, it is possible to refine the parameters for a particular battery.

The model is now used in the SPS simulation of a complete HEV power train (Fig. 9). This demo is based on the series/parallel architecture such as for the Toyota Prius THS-

Authorized licensed use limited to: Xi'an Jiaotong-Liverpool University. Downloaded on January 30,2026 at 06:56:12 UTC from IEEE Xplore. Restrictions apply.

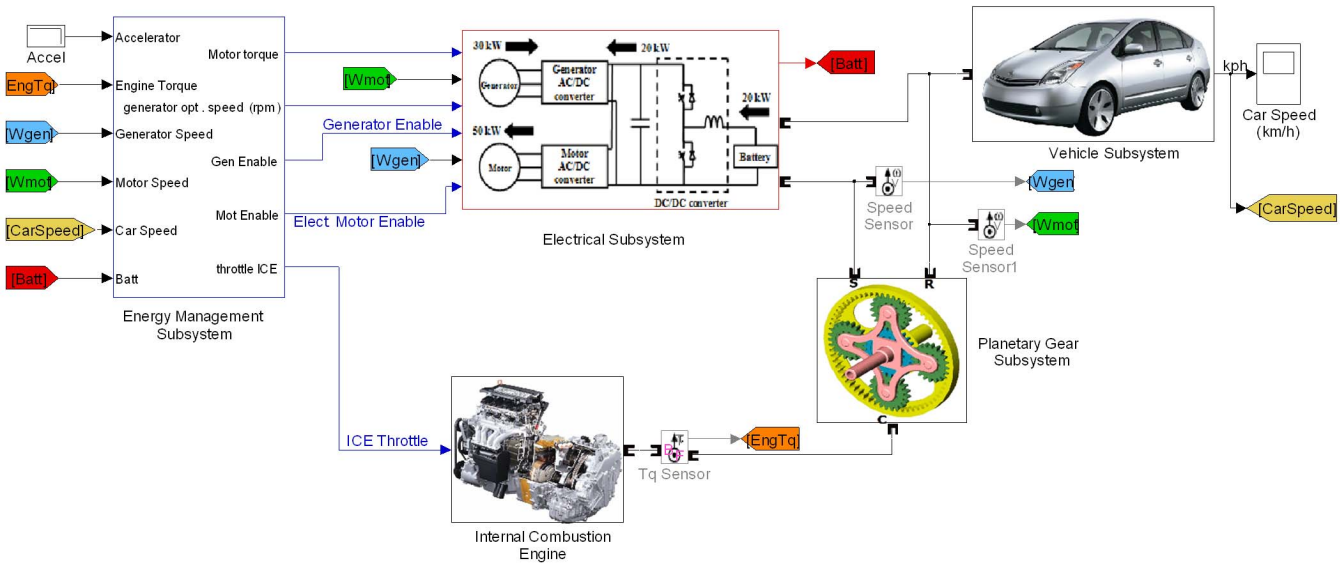

Fig. 9. Hybrid Electric Vehicle simulation model

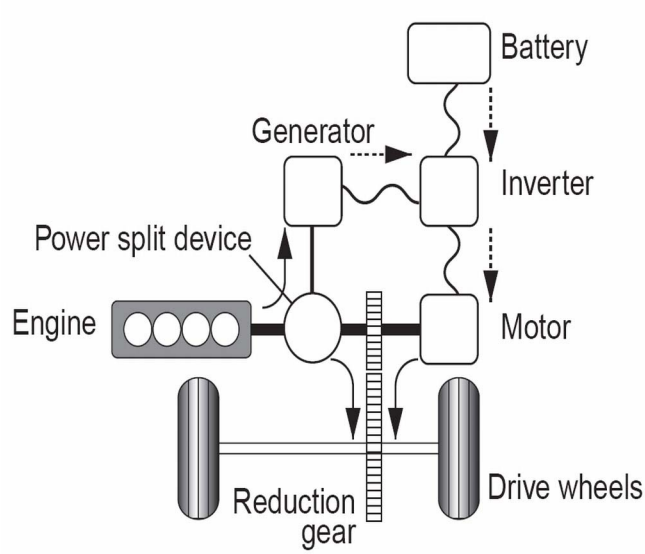

Fig. 10. Series/parallel hybrid system

II. Fig. 10[3] shows a simplified representation of this system.

More particularly, the section concerning the battery (type: NiMH 200V 6.5Ah similar to the one used in the Toyota Prius THS-II) and the DC-DC converter will be studied. The purpose of the DC-DC converter is to interface the 200V battery voltage to the 500V DC bus voltage for the two inverters which will supply the two permanent magnet synchronous machines, as shown in Fig. 11.

Dynamic simulation is a principal stage in the design of systems such as for the hybrid electric car. The improvement

[3]This figure was obtained from the "Special Reports" document on the Toyota website.

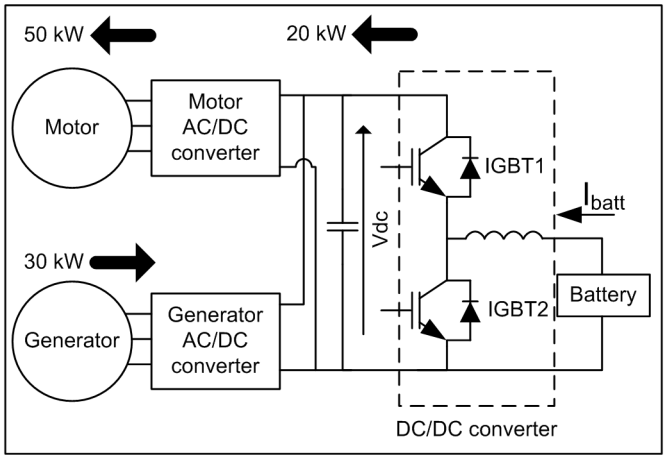

Fig. 11. HEV vehicle electrical system

of the energy management system (EMS) as well as the dimensioning of the components can be obtained with good exactitude with this simulation. For example, so as not to exceed the maximum power of the battery, it is possible to directly control the electric motor in order to limit its current. These current peaks can be determined with precision by dynamic simulation. In this case, the effect of the voltage variation caused by the current's change in the battery can be studied and its impact on the DC-DC converter (which must maintain the DC bus voltage at 500Vdc) can be analysed. Obviously the results in Fig. 12 show only one small part of the entire system. The complete simulation model of the vehicle will be the subject of a subsequent article.

Fig. 12 shows the results for a simulation of 14s. At time t = 0, the vehicle is completely stopped and the accelerator is suddenly pushed to 70%. The vehicle starts in an electric mode until the power required by the vehicle reaches 15 kW

Authorized licensed use limited to: Xi'an Jiaotong-Liverpool University. Downloaded on January 30,2026 at 06:56:12 UTC from IEEE Xplore. Restrictions apply.

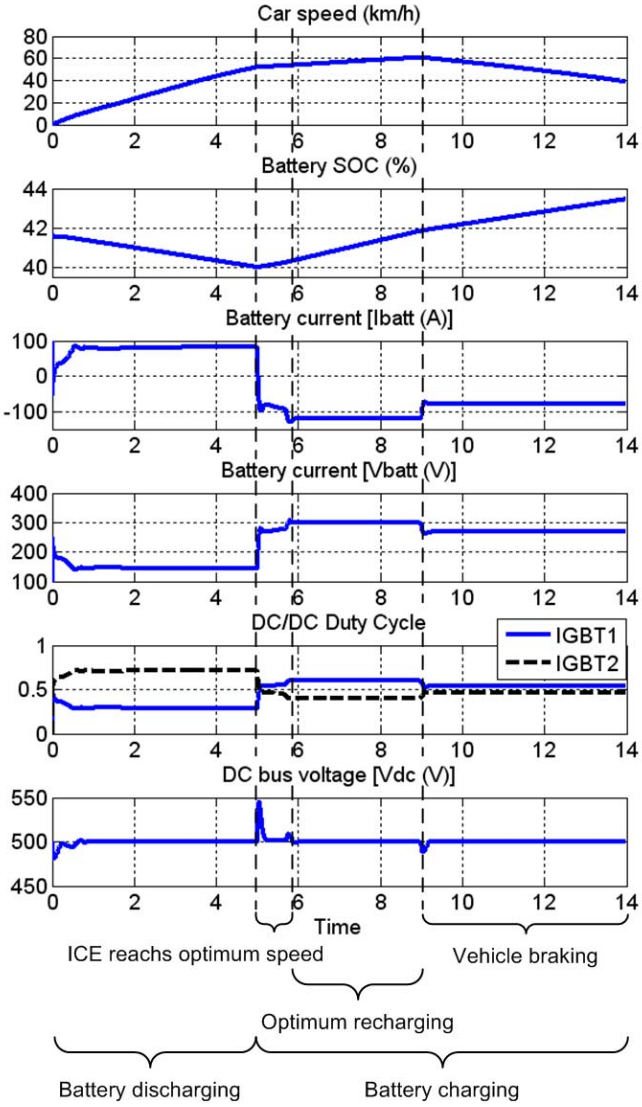

Fig. 12. Battery and DC-DC converter simulation results

(at t = 0.8s). Thereafter, the internal combustion engine (ICE) is started in order to deliver the power (electrical via the generator and mechanical via the planetary gear). When the SOC of the battery goes under 40% (at t = 5s), the electric motor is turned off in order to quickly recharge the battery. At this time, the ICE power is increased in order to recharge the battery in addition to propelling the vehicle. The EMS then increases the ICE's speed (via the generator) in order to obtain the optimal efficiency for this power. Therefore, during a short time, part of the ICE's power is used to accelerate the ICE-generator unit (t = 5s to t = 5.8s). Thereafter, the optimal battery recharge is carried out using the ICE. At time t = 9s, the brake is pushed to 70%. This turns off the ICE and the electric motor is re-activated in order to transfer the braking's energy to the battery.

Note that during this simulation, the DC bus voltage is very well regulated by the converter. Indeed, voltage peaks of less than 10% are observed (at t = 5s for example) while the battery voltage varies by almost 100% (caused by the complete inversion of the direction of the current at the beginning of the recharge).

Simulation using the battery model thus makes it possible to analyse very complex phenomena. In this case, the battery's model parameters are not exactly the same as those of the Prius battery but it is nevertheless possible to study, with good precision, phenomena caused by the battery. Moreover, this model helps to develop the EMS, which controls all the converters as well as the ICE, in order not to exceed the maximum battery power. Finally, it is possible to control the charge and the discharge of the battery with precision. This model is thus the central point of the components of the hybrid car since all the other systems which revolve around the battery, depend on this one.

V. Conclusion

The modelling of a battery is a very complex procedure and requires a thorough knowledge of electrochemistry. The simulation of complete systems, as with the hybrid car, doesn't require such a high level of precision. It is important to know the general behaviour of a battery (for example, it is important to represent the fact that the voltage available depends on the SOC and the current). The proposed model is simple and requires few parameters (only three points on the discharge curve are necessary). Above all, it was shown that the model can accurately represent the discharge curves of the manufacturers. Finally, the model is inserted in a simulation model based on the Toyota Prius THS-II vehicle. The battery model can be used to refine the EMS in order not to exceed the limits of the battery. The results obtained show that the use of this battery model makes it possible to properly represent the transient states. It is thus possible to analyse them in order to fine-tune the various control devices.

References

[1] Durr Matthias, Cruden Andrew, Gair Sinclair, McDonald J.R, "Dynamic model of a lead acid battery for use in a domestic fuel cell system," Journal of Power Sources, Volume 161, n 2, October 27, 2006, pp 1400-1411

[2] E. Kuhn, C. Forgez, P. Lagonotte, G. Friedrich, "Modelling Ni-mH battery using Cauer and Foster structures," Journal of Power Sources, v 158, n 2 SPEC. ISS., Aug 25, 2006, pp 1490-1497

[3] P. Mauracher, E. Karden, "Dynamic modelling of lead/acid batteries using impedance spectroscopy for parameter identification," Journal of Power Sources, v 67, n 1-2, July/August, 1997, pp 69-84

[4] C. M. Shepherd, "Design of Primary and Secondary Cells - Part 2. An equation describing battery discharge," Journal of Electrochemical Society, Volume 112, Jul. 1965 Page(s): 657-664

[5] Gregory L. Plett, "Extended Kalman filtering for battery management systems of LiPB-based HEV battery packs - Part 2. Modeling and identification," Journal of Power Sources, v 134, n 2, Aug 12, 2004, pp 262-276

[6] Wiegman, Herman Lucas Norbert, "Battery state estimation and control for power buffering applications," Ph.D., The University of Wisconsin - Madison, 1999, 216 pages; AAT 9956303

Authorized licensed use limited to: Xi'an Jiaotong-Liverpool University. Downloaded on January 30,2026 at 06:56:12 UTC from IEEE Xplore. Restrictions apply.