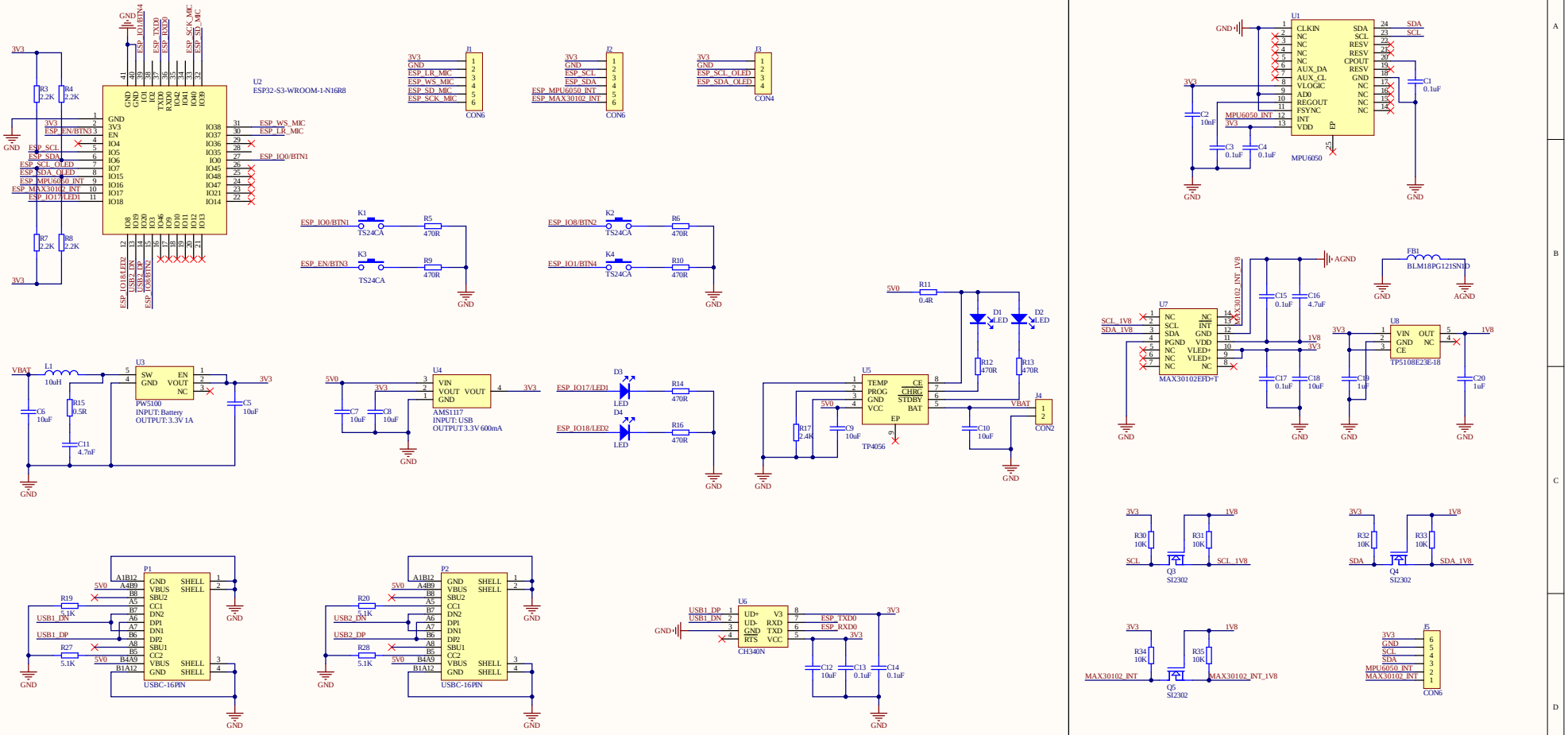

Title	ZYCare Hardware	
Size A3	Number	Revision 1.0
Date: 7/07/2025		Sheet of
File: C:\Users\..\smartwatch.SchDoc		Drawn By: TrWyFowrd

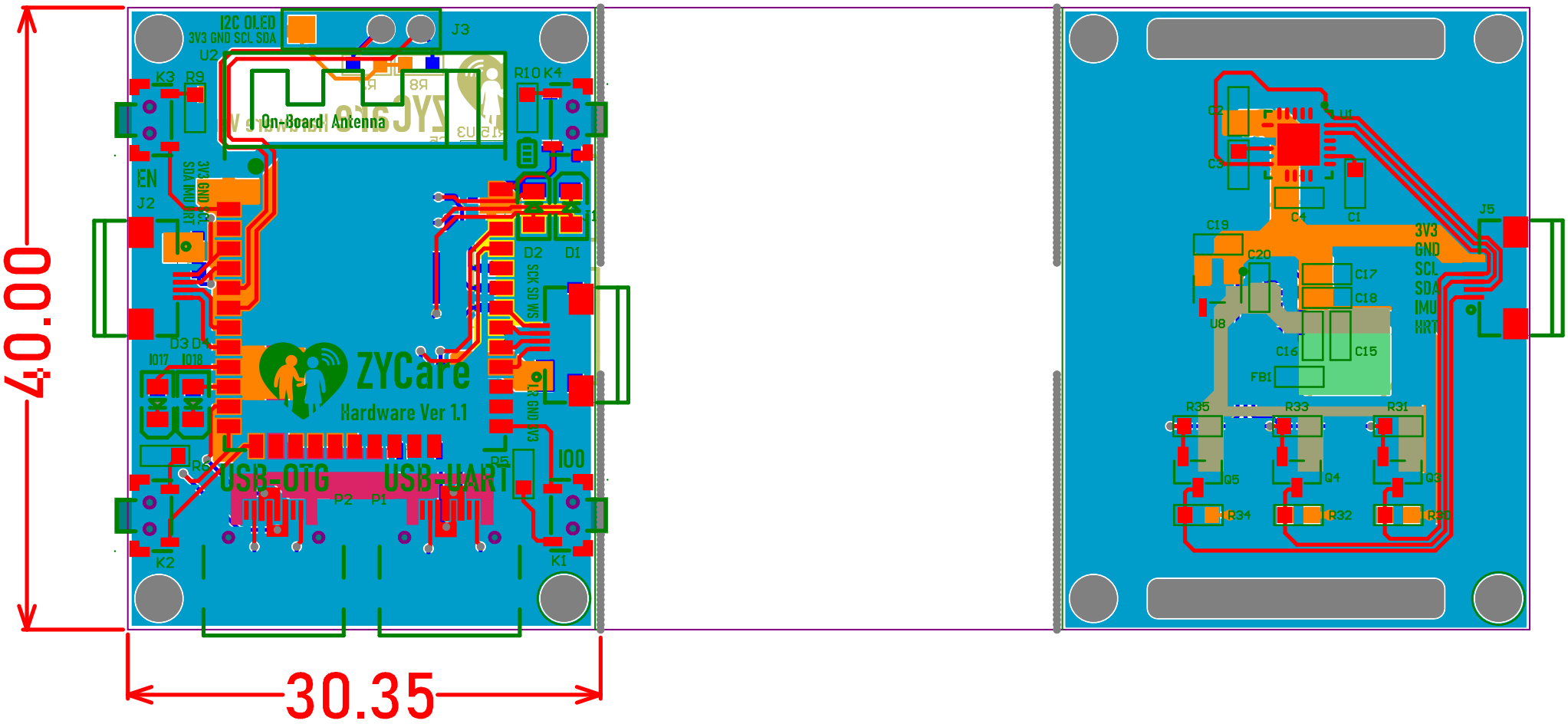
40.00
30.35
I2C OLED
3V3 GND SCL SDA
U2
J3
K3
R9
R10
K4
On-Board Antenna
EN
J2
3V3 GND SCL
SDA IMU HRT
D2
D1
SCK SD WS
D3
D4
IO17
IO18
ZYCare
Hardware Ver 1.1
LX GND 3V3
IO0
R6
R5
USB-OTG
USB-UART
P2
P1
K2
K1
C2
C3
U1
C4
C1
C19
C20
C17
C18
U8
C16
C15
FB1
J5
3V3
GND
SCL
SDA
IMU
HRT
R35
R33
R31
Q5
Q4
Q3
R34
R32
R30