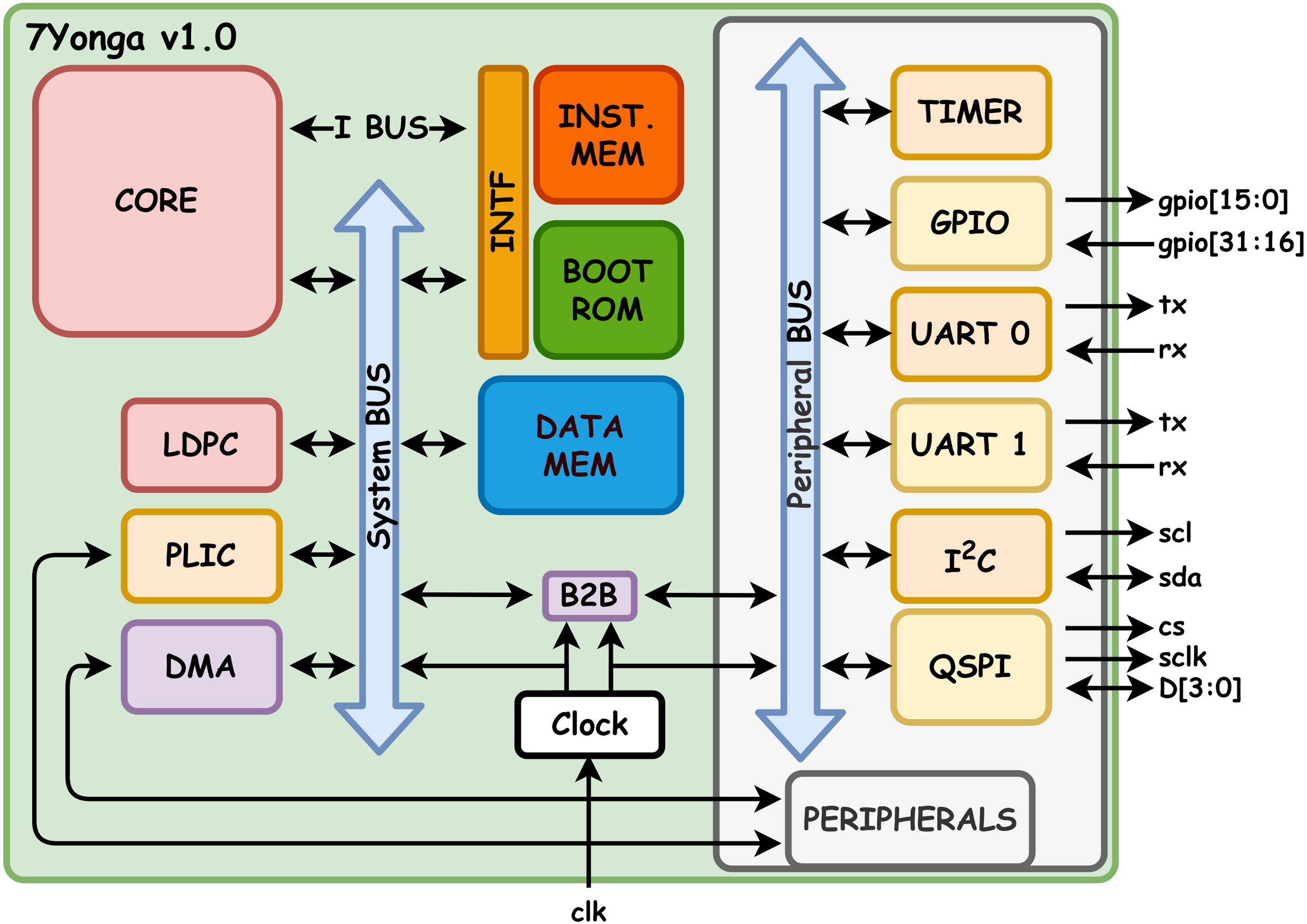
7Yonga v1.0
CORE
I BUS
INTF
INST. MEM
BOOT ROM
System BUS
LDPC
DATA MEM
PLIC
B2B
DMA
Clock
clk
Peripheral BUS
TIMER
GPIO
gpio[15:0]
gpio[31:16]
UART 0
tx
rx
UART 1
tx
rx
I2C
scl
sda
QSPI
cs
sclk
D[3:0]
PERIPHERALS

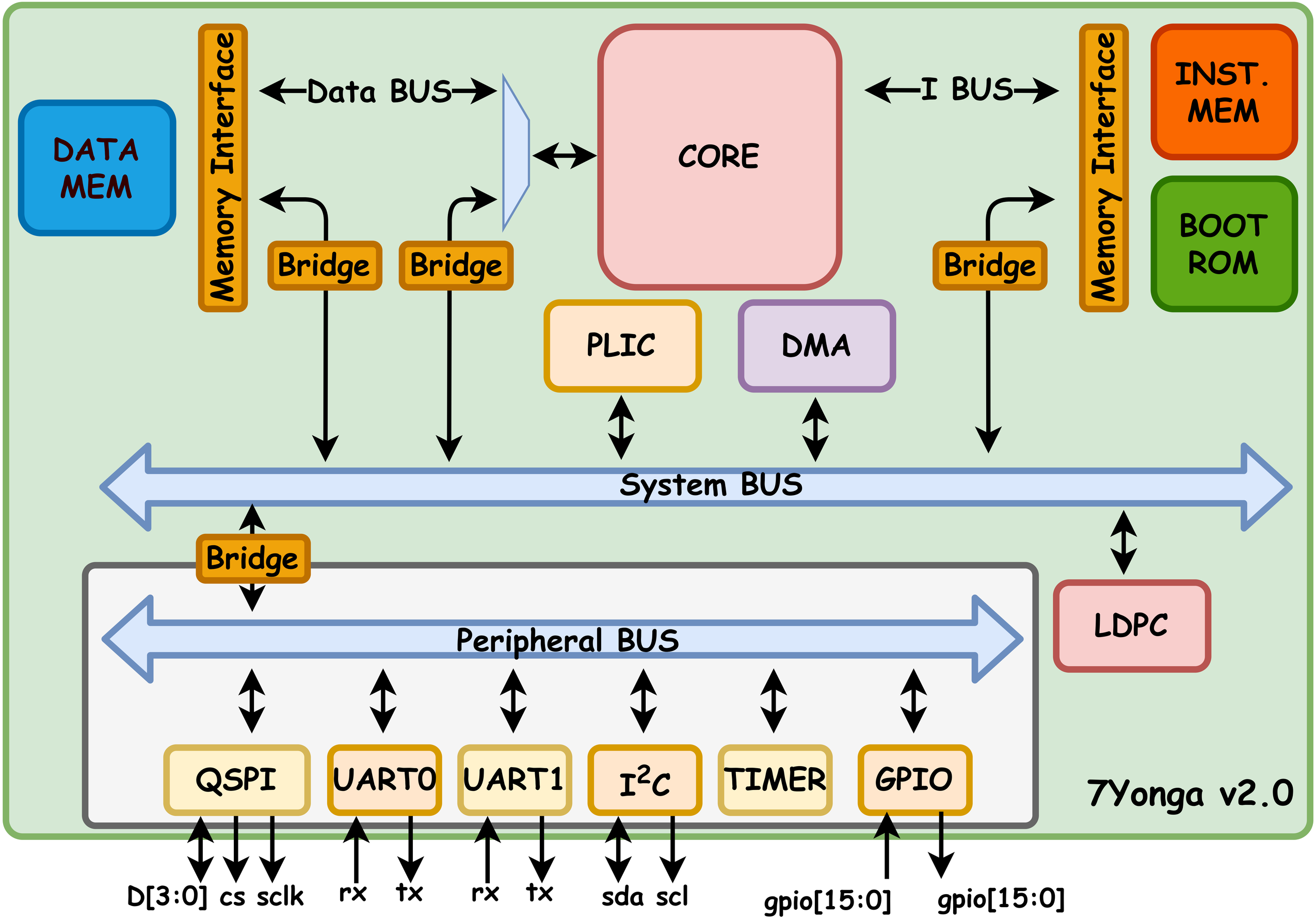
DATA MEM
Memory Interface
Data BUS
Bridge
Bridge
CORE
I BUS
Memory Interface
INST. MEM
BOOT ROM
Bridge
PLIC
DMA
System BUS
Bridge
Peripheral BUS
LDPC
QSPI
UART0
UART1
I2C
TIMER
GPIO
7Yonga v2.0
D[3:0] cs sclk
rx tx
rx tx
sda scl
gpio[15:0]
gpio[15:0]

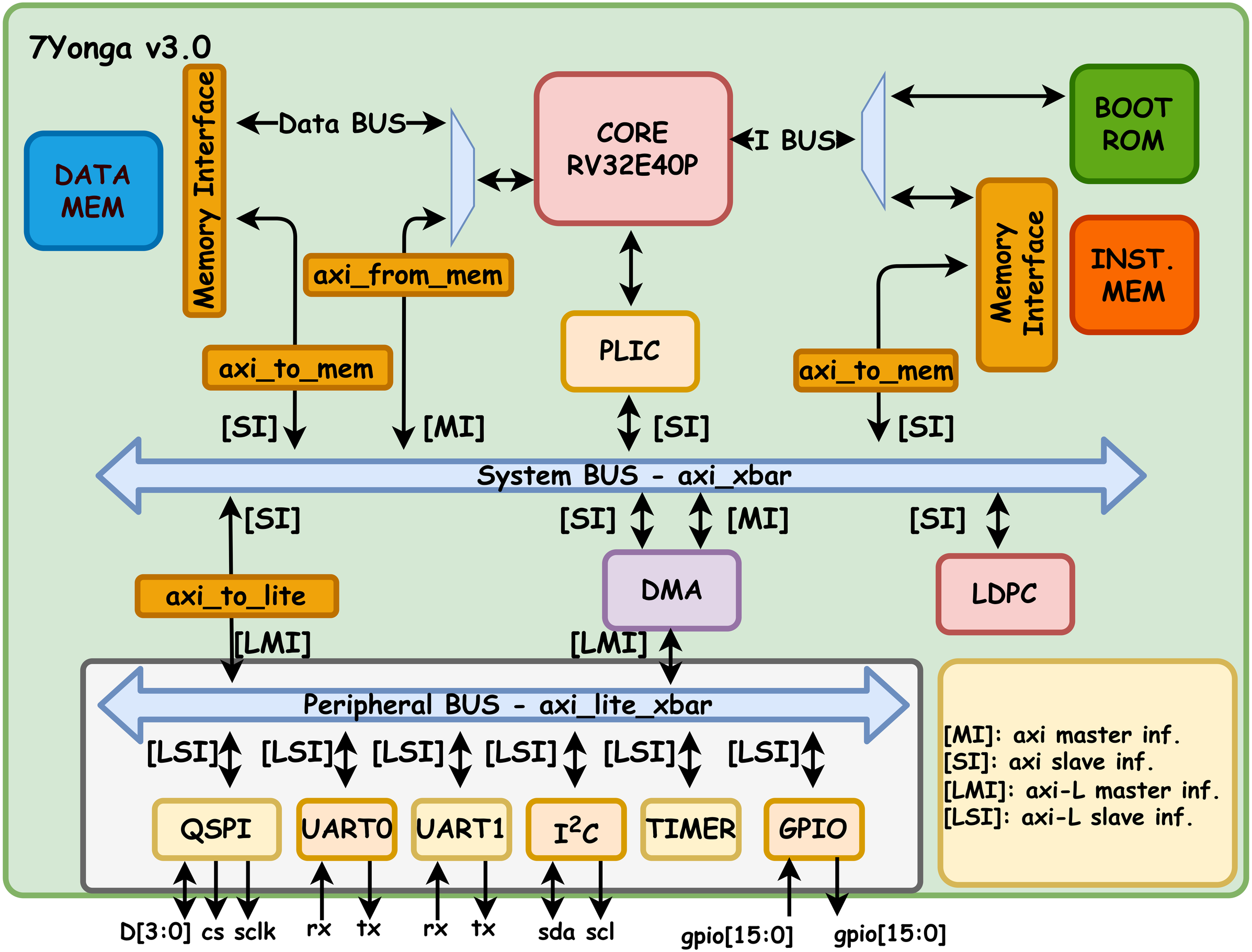
7Yonga v3.0
DATA MEM
Memory Interface
Data BUS
CORE RV32E40P
I BUS
BOOT ROM
Memory Interface
INST. MEM
axi_from_mem
axi_to_mem
PLIC
axi_to_mem
[SI]
[MI]
[SI]
[SI]
System BUS - axi_xbar
[SI]
[SI]
[MI]
[SI]
axi_to_lite
DMA
LDPC
[LMI]
[LMI]
Peripheral BUS - axi_lite_xbar
[LSI]
[LSI]
[LSI]
[LSI]
[LSI]
[LSI]
QSPI
UART0
UART1
I2C
TIMER
GPIO
D[3:0] cs sclk
rx tx
rx tx
sda scl
gpio[15:0]
gpio[15:0]
[MI]: axi master inf.
[SI]: axi slave inf.
[LMI]: axi-L master inf.
[LSI]: axi-L slave inf.