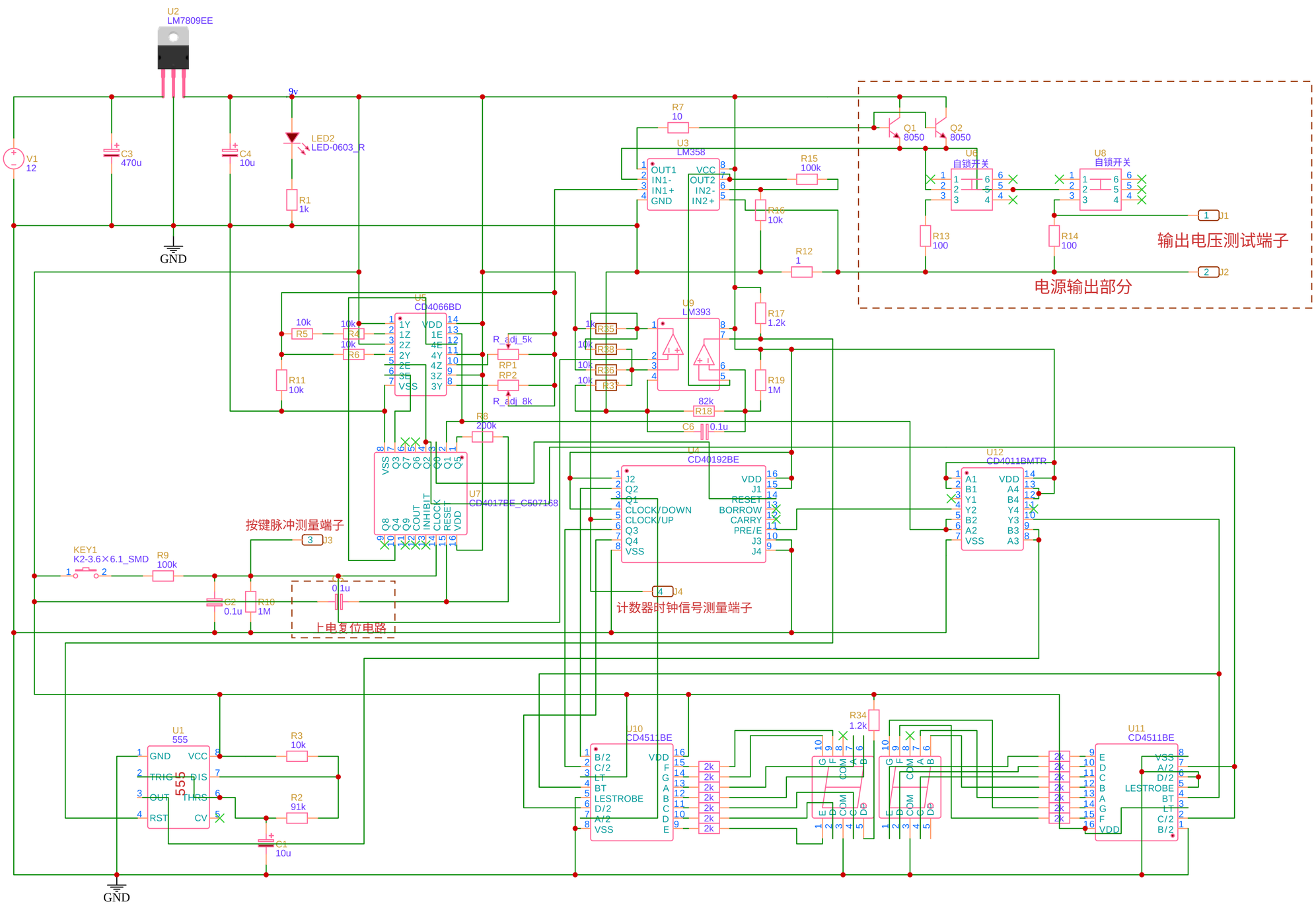
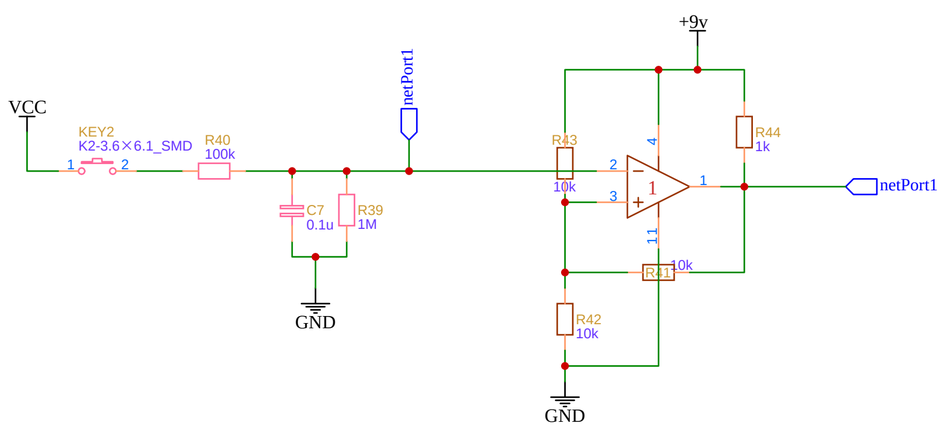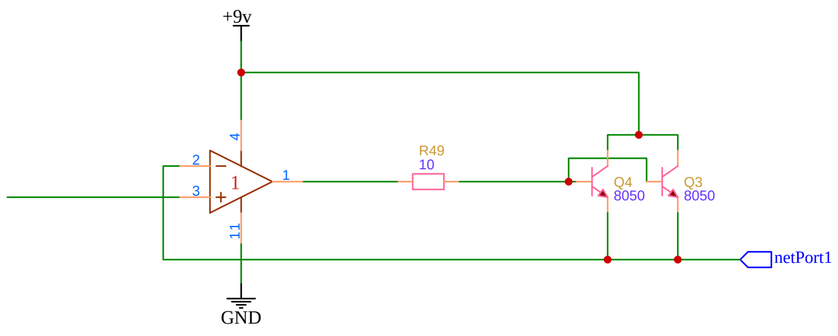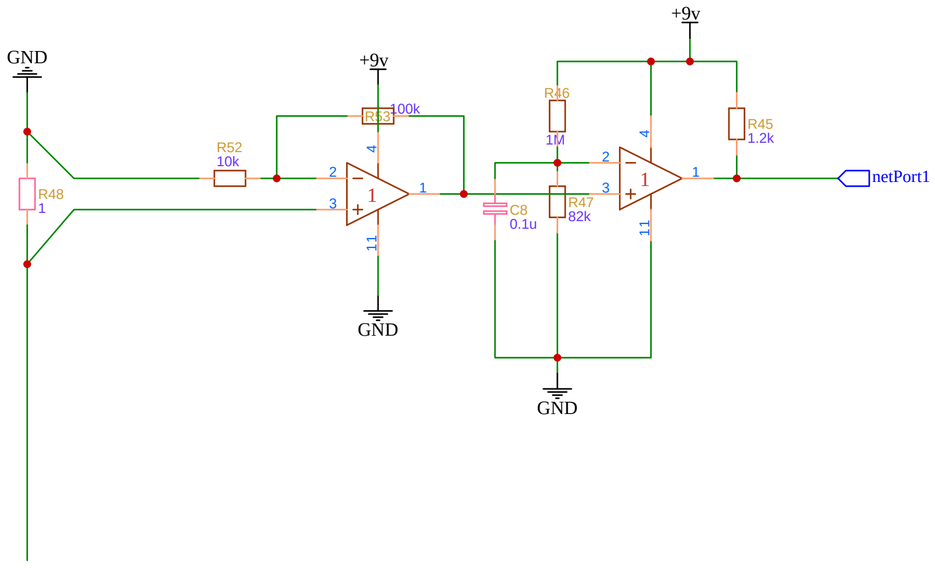
TITLE: DC_adj	REV: 1.0
立创EDA Company: Your Company	Sheet: 1/1
Date: 2021-04-24 Drawn By: YHF_1404