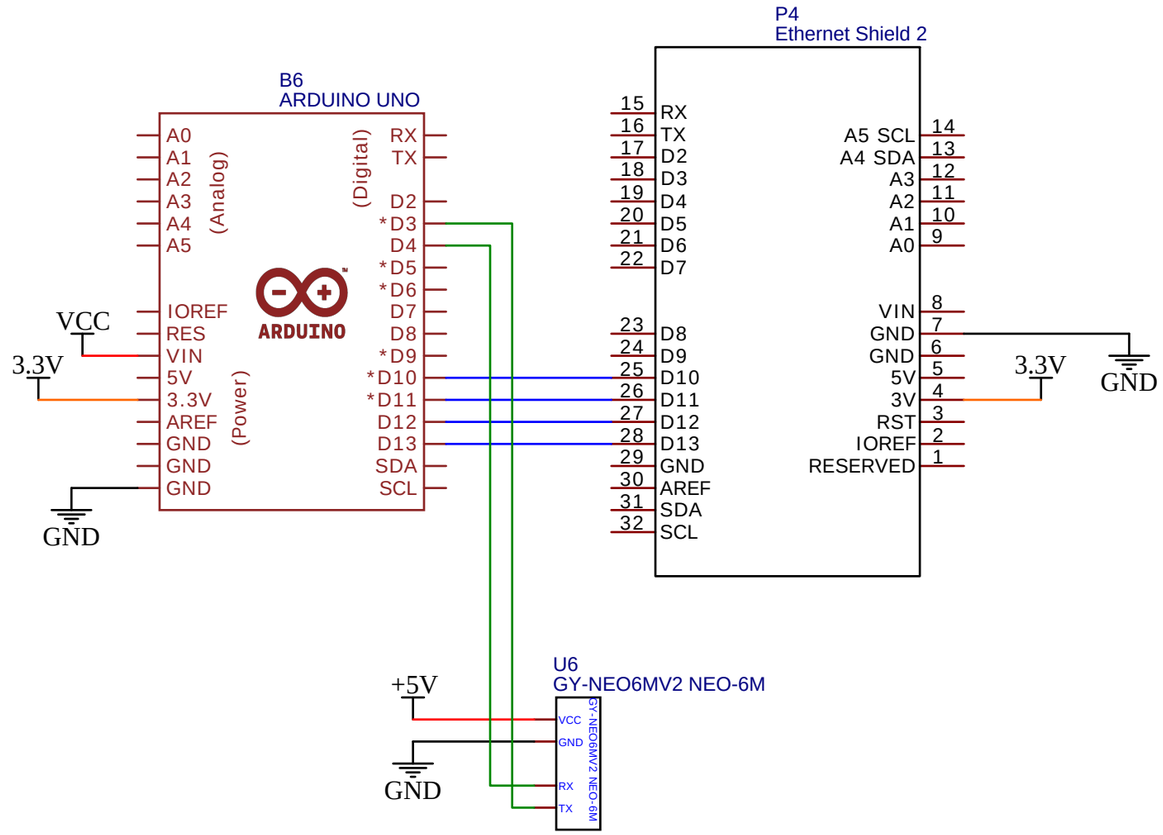

TITLE: Sheet_6		REV: 1.0
EasyEDA	Company: Your Company	Sheet: 1/1
	Date: 2022-01-31 Drawn By:	