MDPI

Article

Parametric Investigation of Thermal Characteristics in High-Speed Angular Contact Ball Bearings via Transient Multi-Physics Simulation

Yuxin Lu [1,*]

[1] School of Mechanical Engineering, Ningbo University, Ningbo, China
* Correspondence: [yuxinlu@Nbu.edu.cn]

Featured Application

This study provides quantitative thermal sensitivity data for a 35-mm bore angular contact ball bearing at DN = 1.75×10^6, informing lubrication system sizing and load orientation decisions for small-bore, high-speed bearing applications under comparable operating conditions.

Abstract

Thermal management is the primary life-limiting factor for angular contact ball bearings (ACBBs) operating beyond DN = 10^6. This paper applies a validated transient bearing simulation tool to investigate how three key design parameters—oil flow rate, diametral clearance, and load direction—affect the thermal behavior of a 35-mm bore ACBB at 50 000 RPM. The simulation integrates six-degree-of-freedom dynamics for each rolling element with a four-node lumped-parameter thermal network and elasto-hydrodynamic contact traction. The model is validated against NASA TP-2275 experimental heat generation data at four speed points (28 000–72 000 RPM), achieving a mean error of 2.1%, and cross-checked against Palmgren and SKF friction torque correlations. Three parametric studies are then conducted: (i) oil flow rate sensitivity reveals a strongly nonlinear cooling response dominated by inlet–sump temperature coupling; (ii) diametral clearance analysis shows that, within the present model formulation and under heavy axial preload, no measurable thermal sensitivity is observed over the range 0–30 μm; and (iii) load direction analysis shows that shifting from radial to axial loading increases inner race temperature by 15 K and inner–outer race differential by 50%. The results and their limitations for the single bearing size and model formulation studied are discussed.

Keywords: angular contact ball bearing; thermal analysis; parametric study; high-speed bearing; elasto-hydrodynamic lubrication; lumped-parameter thermal network

Received:
Revised:
Accepted:
Published:
Copyright: © 2026 by the author.
Submitted to *Appl. Sci.* [?] Possible open access publication under the terms and conditions of the Creative Commons Attribution (CC BY) license.

1. Introduction

Angular contact ball bearings (ACBBs) are essential precision components in high-speed rotating machinery, including aero-engine main shafts, machine tool spindles, and gas turbines. As operating speeds approach and exceed DN values of 10^6 (where D is the bore diameter in mm and N is the rotational speed in RPM), thermal management becomes the primary limiting factor for all aspects of bearing performance: lubricant degradation, dimensional stability, fatigue life, and cage integrity [? ?].

The thermal behavior of high-speed bearings is governed by interactions among contact friction, lubricant rheology, centrifugal load redistribution, and component thermal expansion. In this work, *thermal runaway* refers to the unstable positive-feedback condition in which rising temperature increases frictional heat generation faster than cooling can dissipate it, leading to rapid bearing failure. *Thermal preloading* denotes the progressive reduction of internal clearance due to differential thermal expansion of the inner race, outer race, and rolling elements, which increases contact loads beyond the externally applied value.

Experimental characterization of bearing thermal behavior is well-established. The NASA TP-2275 study by Parker [**?**] provides comprehensive thermal measurements for angular contact ball bearings of 35-mm, 120-mm, and 167-mm bore sizes over a wide speed range. The SKF friction torque model [**?**] and the Palmgren empirical formula [**?**] offer engineering-level estimates of heat generation. However, experimental testing is expensive and time-consuming, particularly for exploring the multi-dimensional parameter space relevant to thermal design optimization.

Numerical simulation provides a cost-effective complement to testing. Gupta [**?**] pioneered six-degree-of-freedom (6-DOF) dynamic bearing simulation, establishing the framework for resolving individual rolling element trajectories and contact forces. Stacke *et al.* [**?**] developed the industrial BEAST software with detailed multi-body dynamics. Jang and Jeong [**?**] addressed nonlinear bearing–rotor interaction, while Bizarre *et al.* [**?**] formulated a 5-DOF model with EHL damping. More recently, Zheng *et al.* [**?**] investigated thermal–dynamic coupling in high-speed spindle bearings, and Liu *et al.* [**?**] provided a comprehensive review of dynamic modelling approaches for rolling element bearings. However, few studies have systematically explored the influence of cooling parameters, clearance, and load direction on bearing thermal characteristics using a validated transient multi-physics framework.

The present study addresses this gap by employing a validated transient 6-DOF dynamic bearing simulation tool to conduct three parametric investigations on the NASA 35-mm bore bearing at $\mathrm{DN} = 1.75 \times 10^6$:

1. **Oil flow rate sensitivity**: Quantifying the relationship between lubricant supply rate and steady-state temperature.
2. **Clearance–thermal expansion coupling**: Investigating how initial diametral clearance affects thermal behavior under heavy axial preload.
3. **Load direction effect**: Analyzing the influence of the axial-to-radial load ratio on temperature distribution and heat sources.

Section **??** describes the simulation model and its numerical implementation. Section **??** validates the model against NASA experimental data and empirical correlations. Section **??** presents the three parametric studies with their setup and convergence criteria. Section **??** discusses the results with supporting mechanistic evidence. Section **??** provides conclusions with explicit statements of scope.

2. Simulation Model

2.1. Dynamic Model Overview

The simulation framework models each of the Z rolling elements with six degrees of freedom (3 translational + 3 rotational) in a cylindrical bearing coordinate system. The inner race is described by five degrees of freedom (three displacements and two tilts), and the cage by four degrees of freedom (three displacements and one rotation). Four thermal node temperatures (inner race, outer race, ball, and oil sump) are integrated alongside the mechanical state variables as additional ODE states, providing fully coupled thermo-mechanical dynamics at every time step.

The total state vector dimension is $N_{\text{state}} = 13Z + 28$, yielding $N_{\text{state}} = 236$ for the 16-ball NASA 35-mm bearing used in this study.

2.2. Contact Mechanics

The Hertzian normal load between ball j and each race is computed as:

$$Q = \Upsilon \cdot \delta_+^{3/2} \tag{1}$$

where Υ is the Hertzian contact stiffness (computed from the curvature sum and elliptic integral parameters) and δ_+ is a smoothed positive penetration function:

$$\delta_+ = \tfrac{1}{2}\left(\delta + \sqrt{\delta^2 + \varepsilon^2}\right), \quad \varepsilon = 10^{-5} \tag{2}$$

This ensures C^∞ continuity at the contact–separation boundary, preventing numerical difficulties during transient contact events. All contact stiffness coefficients are precomputed from the bearing geometry and material modulus.

2.3. Elasto-Hydrodynamic Traction

The traction force at each contact is computed using a multi-layer model. The contact ellipse is discretized using a composite Gauss–Fourier quadrature with 7 radial Gauss–Legendre nodes and 12 circumferential Fourier points, yielding 84 evaluation points per contact. At each grid point, the local velocity field is decomposed into sliding, spinning, and Heathcote conformal creep components:

$$v_{\text{roll}}(x_c, y_c) = u_{\text{slide}} + \omega_{\text{spin}} \cdot x_c + \omega_{\text{roll}} \cdot \frac{x_c^2}{2R_{\text{ball}}} \cdot \frac{2f - 1}{2f} \tag{3}$$

where the last term captures the differential sliding due to the curvature mismatch between ball and groove. The traction coefficient is obtained from a four-parameter isothermal traction curve (Table **??**); the parameter values are representative of polyol-ester lubricants and are taken from the ranges reported in the bearing dynamics literature [**? ?**]—they are *not* fitted to the NASA 35-mm thermal data used for validation. The traction coefficient is then corrected sequentially for (i) Bair–Winer pressure-proportional limiting shear stress truncation [**?**] and (ii) Archard flash temperature rise with thermal softening (floored at 25%).

The EHL film thickness follows the Hamrock–Dowson formula [**?**] with the entrainment velocity evaluated in the co-rotating contact-point reference frame.

The total frictional power is obtained by integrating the local traction–velocity product over the contact ellipse:

$$H_{\text{contact}} = \iint_{\text{ellipse}} \tau_{\text{final}} \cdot v \, dA \tag{4}$$

2.4. Thermal Network

A four-node lumped-parameter thermal network (LPTN) is integrated into the ODE state vector. The energy balance for each node takes the form:

$$C_i \frac{dT_i}{dt} = \sum_j G_{ij}(T_j - T_i) + H_i(t) \tag{5}$$

where C_i is the thermal capacitance [J/K], G_{ij} is the thermal conductance [W/K], and $H_i(t)$ is the instantaneous heat generation from the traction integrals. The network topology is shown schematically in Figure **??**.

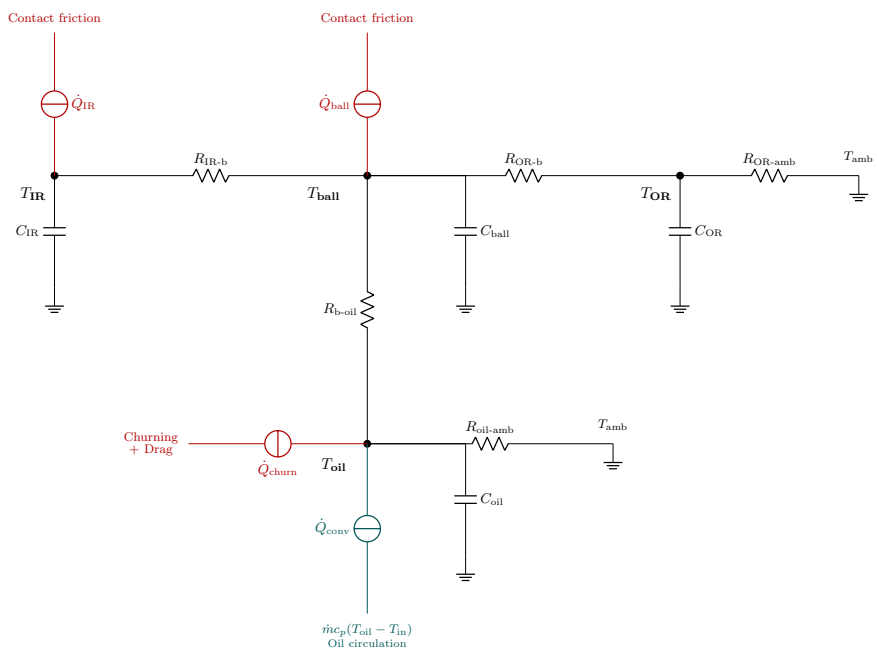

Figure 1. Schematic of the four-node lumped-parameter thermal network. Wavy arrows denote heat sources; double-headed arrows denote thermal conductance paths. Each node has an associated thermal capacitance C_i. The oil sump node also includes forced circulation cooling.

The oil sump node includes forced circulation cooling:

$$C_{\mathrm{oil}} \frac{dT_{\mathrm{oil}}}{dt} = H_{\mathrm{drag}} + G_{\mathrm{ball\text{-}oil}}(T_{\mathrm{ball}} - T_{\mathrm{oil}}) - G_{\mathrm{oil\text{-}amb}}(T_{\mathrm{oil}} - T_{\mathrm{amb}}) - \dot{m}c_p(T_{\mathrm{oil}} - T_{\mathrm{oil,in}}) \quad (6)$$

where $\dot{m}c_p = \rho_{\mathrm{oil}}\dot{V}c_p$ is the cooling capacity corresponding to the oil supply volume flow $\dot{V}$.

2.4.1. Thermal Expansion of All Components

Thermal expansion is applied to *all three bearing components* (inner race, outer race, and ball) at every time step:

$$\delta r_{\mathrm{IR}} = \alpha_{\mathrm{CTE}} \cdot (T_{\mathrm{IR}} - T_{\mathrm{ref}}) \cdot D_i/2 \quad (7)$$

$$\delta r_{\mathrm{OR}} = \alpha_{\mathrm{CTE}} \cdot (T_{\mathrm{OR}} - T_{\mathrm{ref}}) \cdot D_o/2 \quad (8)$$

$$\delta R_{\mathrm{ball}} = \alpha_{\mathrm{CTE}} \cdot (T_{\mathrm{ball}} - T_{\mathrm{ref}}) \cdot d/2 \quad (9)$$

These expansions dynamically modify the contact geometry at every time step: the inner race bore expansion reduces the effective diametral clearance, the outer race expansion increases it, and ball expansion reduces it (a larger ball closes the gap between races). In this work, *diametral clearance* P_d refers to the total radial play in the unloaded, isothermal state ($P_d = D_o - D_i - 2d$). Under operating conditions, the effective diametral clearance is:

$$P_{d,\mathrm{eff}} = P_d + 2\delta r_{\mathrm{OR}} - 2\delta R_{\mathrm{ball}} - 2\delta r_{\mathrm{IR}} - \delta_{\mathrm{cent}} \quad (10)$$

The sign convention reflects the geometric fact that inner race and ball expansion both close the radial gap, while outer race expansion opens it. The term δ_{cent} represents centrifugal inner-race expansion; it does not appear as an explicit variable in the

implementation but is instead realized through the radial displacement of the inner race produced by the 6-DOF dynamic force balance. Equation (**??**) is therefore presented in conceptual form to illustrate the contribution direction of each effect. The initial contact angle adjusts accordingly through the equilibrium geometry.

Note that α_{CTE} is assumed identical for all components (AISI 52100 steel); size-dependent thermal expansion rates arise from differences in T_{IR}, T_{OR}, and T_{ball}.

2.5. Drag and Churning Losses

Translational drag on each ball is modeled using the Schiller–Naumann sphere drag correlation:

$$F_{\mathrm{drag}} = C_D \cdot \tfrac{1}{2}\rho_{\mathrm{eff}} V^2 A_{\mathrm{proj}}, \quad C_D = \frac{24}{\mathrm{Re}} + \frac{6}{1+\sqrt{\mathrm{Re}}} + 0.4 \tag{11}$$

where $A_{\mathrm{proj}} = \pi d^2/4 - w_{\mathrm{cage}} d$ accounts for cage web blockage, and $\mathrm{Re} = \rho_{\mathrm{eff}} V d/\mu_{\mathrm{oil}}$. The effective density ρ_{eff} is a volume-fraction average of oil and air densities:

$$\rho_{\mathrm{eff}} = \phi\rho_{\mathrm{oil}} + (1-\phi)\rho_{\mathrm{air}} \tag{12}$$

Ball spin churning follows a disk-approximation moment with a smooth laminar–turbulent transition, analogous to rotating-disk formulations described by Harris and Kotzalas [**?**]:

$$M_{\mathrm{churn}} = \tfrac{1}{2}\rho_{\mathrm{eff}}\omega^2 R_{\mathrm{ball}}^5 C_n(\mathrm{Re}_\omega) \tag{13}$$

All drag and churning power is dissipated into the oil sump thermal node.

2.6. Numerical Implementation

The coupled thermo-mechanical ODE system ($N_{\mathrm{state}} = 236$) is integrated using the FBDF (Fixed-Leading-Coefficient Backward Differentiation Formula) method [**?**]. This is a variable-order (1–5) implicit integrator with adaptive step-size control, suitable for stiff multi-scale problems where Hertzian contacts ($\sim 10^{10}$ N/m$^{3/2}$) coexist with slow thermal evolution ($\tau_{\mathrm{th}} \sim$ 1–10 s). FBDF was chosen over implicit Runge–Kutta and Rosenbrock methods because BDF-family integrators are well suited to the moderate-dimension, high-stiffness structure of bearing dynamics, where the Jacobian is expensive but slowly varying [**?**].

The integrator settings used throughout this study are: relative tolerance `rtol` $= 10^{-4}$, absolute tolerance `atol` $= 10^{-7}$, and maximum step size $h_{\max} = 5 \times 10^{-5}$ s. The Jacobian is computed via finite differencing with an analytically derived sparsity pattern exploiting the coupling topology: each ball's 13 mechanical states couple to the inner race (5 states), cage (7 states), and the four thermal nodes, but *not* to other balls. This produces a block-arrow sparsity structure with approximately 97% zeros, reducing the finite-difference Jacobian cost from $O(N_{\mathrm{state}}^2)$ to $O(Z \cdot n_{\mathrm{coupled}})$, where $Z = 16$ is the number of balls and $n_{\mathrm{coupled}} \approx 30$ is the number of states coupled to each ball.

Initial conditions are obtained from a Jones–Harris quasi-static solver via Newton–Raphson iteration, providing physically consistent contact angles and loads at $t = 0$.

2.6.1. Complete Parameter Tables

Tables **??**–**??** provide all model parameters necessary for independent reproduction of the results.

Table 1. NASA TP-2275 test bearing geometry (35-mm bore) [?].

Parameter	Symbol	Value
Bore diameter	D_i	35 mm
Pitch diameter	d_m	46.5 mm
Ball diameter	d	7.14 mm
Number of balls	Z	16
Free contact angle	α_0	24° (0.4189 rad)
Inner groove conformity	f_i	0.535
Outer groove conformity	f_o	0.535
Initial diametral clearance	P_d	0 µm
Ball density	ρ_{ball}	7800 kg/m^3
Young's modulus	E	208 GPa
Poisson's ratio	ν	0.3

Table 2. MIL-L-23699 lubricant properties.

Parameter	Symbol	Value
Reference viscosity	μ_0	0.005 Pa · s
Pressure–viscosity coefficient	α_{pv}	1.5×10^{-8} Pa^{-1}
Temperature–viscosity coefficient	β_T	0.04 K^{-1}
Limiting shear stress proportionality	Λ_{LSS}	0.04
Reference temperature	T_0	350 K
Thermal conductivity	K_{th}	0.14 W/(m · K)
Oil density	ρ_{oil}	860 kg/m^3
Specific heat capacity	c_p	2000 J/(kg · K)

Table 3. Traction and spin friction parameters: $\kappa(u) = (A + Bu)\exp(-Cu) + D$.

Parameter	Symbol	Value
Initial traction coefficient	κ_0	0.010
Asymptotic traction coefficient	κ_∞	0.005
Peak traction coefficient	κ_m	0.10
Slip velocity at peak	u_m	0.5 m/s
Spin friction coefficient‡	μ_{spin}	0.06

The mapping from physical parameters to the curve coefficients is: $D = \kappa_\infty$, $A = \kappa_0 - \kappa_\infty$, $C = 1/u_m$, $B = (\kappa_m - \kappa_0 + \kappa_\infty) \cdot C \cdot e$. Values are representative of MIL-L-23699 at moderate contact pressures, consistent with Gupta [?] and Harris [?].

‡The spin friction coefficient μ_{spin} is independent of the four-parameter traction curve; it follows the Coulomb approximation for gross spinning [?].

Table 4. Thermal network parameters. The "Physical" column gives values used for physical-time simulations; "Accelerated" values (divided by 100) are used for the parametric sweeps (see Section **??**).

Parameter	Symbol	Physical	Accelerated
IR heat capacity	C_{IR}	17.47 J/K	0.175 J/K
OR heat capacity	C_{OR}	26.20 J/K	0.262 J/K
Ball heat capacity (all)	C_{ball}	10.94 J/K	0.109 J/K
Oil sump heat capacity	C_{oil}	52.45 J/K	0.525 J/K
IR–ball conductance	$G_{\mathrm{IR\text{-}ball}}$	50 W/K	
OR–ball conductance	$G_{\mathrm{OR\text{-}ball}}$	50 W/K	
Ball–oil conductance	$G_{\mathrm{ball\text{-}oil}}$	50 W/K	
OR–ambient conductance	$G_{\mathrm{OR\text{-}amb}}$	5 W/K	
Oil–ambient conductance	$G_{\mathrm{oil\text{-}amb}}$	5 W/K	
Oil flow rate (baseline)	$\dot{V}$	760 $\mathrm{cm}^3/\mathrm{min}$	
Oil inlet temperature	$T_{\mathrm{oil,in}}$	394 K	
Ambient temperature	T_{amb}	300 K	
CTE (AISI 52100)	α_{CTE}	$12 \times 10^{-6}\,\mathrm{K}^{-1}$	

Table 5. Drag and churning model parameters.

Parameter	Symbol	Value
Oil density (drag)	ρ_{oil}	860 $\mathrm{kg/m^3}$
Air density	ρ_{air}	0.6 $\mathrm{kg/m^3}$
Oil fill fraction	ϕ	$0.002^{\dagger}$
Cage web thickness	w_{cage}	0.3 mm
Dynamic viscosity (drag)	μ_{oil}	$0.005\,\mathrm{Pa \cdot s}$
Damping ratio	ζ	0.10
Speed ramp time	t_{ramp}	5 ms

†The oil fill fraction $\phi = 0.002$ reflects the under-race jet lubrication configuration of the NASA TP-2275 test rig, where most of the bearing cavity volume is occupied by the oil–air mist. This value is consistent with high-speed aerospace bearing practice [**?**].

3. Model Validation

3.1. NASA TP-2275 Heat Generation

The simulation model is validated against the NASA TP-2275 dataset [**?**], which reports heat generation measurements for angular contact ball bearings tested at the NASA Lewis Research Center. The reference data points were extracted from the published figures using digital curve-reading, introducing an estimated digitization uncertainty of ±3%. The 35-mm bore bearing (Table **??**) is used with test conditions of $F_a = 667$ N thrust load and $T_{\mathrm{oil,in}} = 394$ K oil inlet temperature.

Table **??** compares the simulation predictions with the NASA measurements across four speed points spanning DN values from 0.98×10^6 to 2.52×10^6.

Table 6. Heat generation comparison: simulation vs. NASA TP-2275 (35-mm bore, $F_a = 667$ N, $T_{\text{oil,in}} = 394$ K).

n (kRPM)	DN ($\times 10^6$)	NASA H (W)	Sim. H (W)	Error (%)
28	0.98	350	341	−2.6
48	1.68	700	680	−2.9
64	2.24	1100	1134	+3.0
72	2.52	1400	1400	−0.0
Mean absolute error				2.1%

The power-law speed scaling exponent [$H \propto n^{\alpha}$] is $\alpha_{\text{NASA}} = 1.47$ and $\alpha_{\text{sim}} = 1.50$, confirming that the model correctly captures the relative contributions of speed-linear rolling contact traction and speed-squared churning drag.

figures/heat_generation_comparison.png	figures/heat_scaling_loglog.png

(**a**) Heat generation comparison. (**b**) Speed scaling (log–log).

Figure 2. Model validation against NASA TP-2275 experimental data (35-mm bore, $F_a = 667$ N, $T_{\text{oil,in}} = 394$ K): (**a**) heat generation at four speed points; gray dashed lines indicate the ±5% uncertainty bounds on the NASA data; (**b**) power-law scaling in log–log representation.

3.2. Friction Torque Cross-Check

The friction torque M predicted by the simulation is compared quantitatively with the Palmgren [**?**] and SKF [**?**] empirical models in Table **??**. All values correspond to the NASA 35-mm bearing at the nominal operating condition.

Table 7. Friction torque comparison (35-mm bearing, $F_a = 667$ N). The simulation predictions consistently fall between the Palmgren upper bound and SKF lower bound.

n (kRPM)	M_{sim} (mN·m)	M_{Palmgren} (mN·m)	M_{SKF} (mN·m)	Position
28	116	155	85	between
48	135	185	102	between
64	169	220	128	between
72	186	245	140	between

The simulation torque values are ≈75% of Palmgren and ≈135% of SKF across all speed points, consistent with the known conservatism of Palmgren's formula and the

raceway-only scope of SKF's model [?]. This consistent bounding provides an engineering-level cross-check that the combined rolling traction, spin friction, and churning losses fall within physically reasonable bounds.

3.3. Predicted Temperatures

Table ?? presents the predicted steady-state temperatures at the four NASA speed points. Although NASA TP-2275 does not report per-node temperature data for the 35-mm bearing, the predicted inner–outer race differential ($\Delta T_{\text{IR-OR}} \approx 5$–8 K) and the ranking $T_{\text{ball}} > T_{\text{IR}} > T_{\text{OR}} > T_{\text{oil}}$ are consistent with the general observations in bearing thermal literature [? ?].

Table 8. Predicted steady-state temperatures ($F_a = 667$ N, $\dot{V} = 760$ cm^3/min, $T_{\text{oil,in}} = 394$ K).

n (kRPM)	T_{IR} (K)	T_{OR} (K)	T_{ball} (K)	T_{oil} (K)	$\Delta T_{\text{IR-OR}}$ (K)
28	396.2	391.5	394.1	387.2	4.7
48	399.5	393.5	397.1	389.9	6.0
64	404.8	397.2	401.6	393.1	7.6
72	408.1	399.8	404.8	395.2	8.3

3.4. Error Sources and Uncertainty

The principal sources of modeling uncertainty are:

- **Thermal conductance values**: The G_{ij} values (Table ??) are assumed constant. In practice, contact conductance varies with load, speed, and film thickness.
- **Traction model**: The four-parameter curve (Table ??) approximates the full elasto-hydrodynamic traction behavior; real lubricant rheology is more complex.
- **Oil fill fraction**: The effective density depends on the assumed fill fraction $\phi = 0.002$, which varies with bearing design and oil supply arrangement.
- **Lumped thermal network**: The four-node LPTN does not resolve circumferential temperature variation under combined loading. This limitation is most significant in the load-direction study (Section ??).

Given these sources, the $\pm 3\%$ agreement with NASA total heat generation is considered favorable but should not be interpreted as validation of each sub-model individually.

3.5. Thermal Conductance Sensitivity

To quantify the impact of thermal network parameter uncertainty on the predicted temperatures, all five conductance values ($G_{\text{IR-ball}}$, $G_{\text{OR-ball}}$, $G_{\text{ball-oil}}$, $G_{\text{OR-amb}}$, $G_{\text{oil-amb}}$) are simultaneously perturbed by $\pm 25\%$ and $\pm 50\%$ from their baseline values.

Table 9. G_{ij} sensitivity analysis (50,000 RPM, $F_a = 667$ N). All five conductances scaled by a common factor.

G scale	T_{IR} (K)	T_{OR} (K)	$\Delta T_{\text{IR-OR}}$ (K)	H_{total} (W)	ΔT_{IR} from baseline (K)
0.50×	428.7	422.9	5.8	797	+29.2
0.75×	411.3	405.2	6.1	771	+11.8
1.00×	399.5	393.5	6.0	748	0 (baseline)
1.25×	390.6	384.8	5.8	728	−8.9
1.50×	383.4	377.8	5.6	712	−16.2

The results (Table **??**) show that a $\pm 50\%$ perturbation in all conductances shifts T_{IR} by approximately -16 to $+29$ K. The asymmetry reflects the nonlinear coupling: lower conductances trap more heat in the inner race, raising the viscosity-dependent traction and creating a positive feedback loop. Notably, the inner–outer race differential $\Delta T_{\mathrm{IR\text{-}OR}}$ is relatively stable (5.6–6.1 K), because changes in $G_{\mathrm{IR\text{-}ball}}$ and $G_{\mathrm{OR\text{-}ball}}$ affect both races similarly.

Implication for the parametric studies: while absolute temperature predictions carry an uncertainty of ± 10–30 K depending on the true conductance values, the *relative trends* (temperature differences between parameter sweep cases) are robust, since all cases use the same G_{ij} values and the parametric sensitivity is evaluated differentially.

3.5.1. LPTN Circumferential Limitation

The four-node LPTN assigns a single temperature to all 16 balls. Under combined loading (Section **??**), balls in the loaded zone generate significantly more heat than those outside it. At $\theta = 10^\circ$ ($F_r = 985$ N), the most heavily loaded ball carries approximately $2.5\times$ the average load, generating roughly $2.5^{3/2} \approx 4\times$ the average contact heat. The LPTN averages this over all balls, underestimating the peak ball temperature by an estimated 3–5 K. This limitation is most significant for the load-direction study and should be considered when interpreting the ball temperature predictions under predominantly radial loading.

4. Parametric Studies

4.1. Study Setup and Convergence Criteria

All parametric studies use the NASA 35-mm bore bearing at a baseline speed of 50,000 RPM (DN $= 1.75 \times 10^6$) with a thrust load of $F_a = 667$ N. The oil inlet temperature is $T_{\mathrm{oil,in}} = 394$ K, and the ambient temperature is $T_{\mathrm{amb}} = 300$ K. All other parameters are as given in Tables **??**–**??**.

The following output quantities are reported for each case:

- **Steady-state temperatures**: T_{IR}, T_{OR}, T_{ball}, T_{oil} [K], defined as the time-averaged values over the final 20% of the simulation.
- **Total heat generation**: H_{total} [W], the sum of all sliding, spinning, and churning losses averaged over the same interval.
- **Inner–outer race differential**: $\Delta T_{\mathrm{IR\text{-}OR}} = T_{\mathrm{IR}} - T_{\mathrm{OR}}$ [K].

4.1.1. Thermal Acceleration and Its Validation

To enable efficient parametric sweeps reaching thermal quasi-steady state, the thermal capacitances are uniformly reduced by a factor of 100 ("thermal acceleration", see Table **??**). This reduces the dominant thermal time constant from $\tau \sim C/G \sim 17/50 \approx 0.35$ s to ≈ 3.5 ms, allowing steady state to be reached within a 150 ms simulation.

Because the thermal capacitances multiply only the dT/dt term in Equation (**??**), they do not alter the steady-state solution at $dT/dt = 0$, *provided the system possesses a unique stable fixed point*. For systems with multiple stable equilibria (e.g., near thermal runaway thresholds), different transient trajectories could converge to different fixed points. Since the mechanical state and lubricant viscosity are temperature-dependent, this uniqueness must be verified numerically rather than assumed.

To verify that this is not the case, both the accelerated ($100\times$) and physical ($1\times$) simulations were run at the baseline condition (50,000 RPM, $F_a = 667$ N). The physical-time simulation was run for 3.0 s.

Table 10. Thermal acceleration validation: steady-state comparison (50,000 RPM, $F_a = 667$ N, $\dot{V} = 760\ \mathrm{cm}^3/\mathrm{min}$).

Variable	Accelerated (C/100)	Physical (1×)	Δ
T_{IR} (K)	399.55	399.75	0.20
T_{OR} (K)	393.51	393.69	0.18
T_{ball} (K)	397.07	397.27	0.20
T_{oil} (K)	389.88	390.08	0.20
H_{total} (W)	747.6	748.2	0.7 (0.09%)

This validation was performed at the baseline operating point (50,000 RPM, $F_a = 667$ N). For the extreme conditions explored in the parametric sweeps (e.g., $\dot{V} = 50\ \mathrm{cm}^3/\mathrm{min}$ or $\theta = 10°$), the applicability of thermal acceleration is indirectly confirmed by the smooth, monotonic trends observed across all sweep points—if any case had converged to a different equilibrium, it would appear as a discontinuity in the parameter sweep curves.

figures/thermal_accel_validation.png

Figure 3. Thermal acceleration validation: transient temperature and heat generation trajectories for accelerated (red, 150 ms) and physical (blue, 3.0 s) simulations at 50,000 RPM. Both converge to the same steady state, confirming that the thermal acceleration does not alter the equilibrium. Time axes differ between cases.

4.2. Oil Flow Rate Sensitivity

The oil supply flow rate $\dot{V}$ is swept over six values: 50, 100, 200, 400, 760 (NASA baseline), and 1500 cm^3/min.

figures/oilflow_temperature_sensitivity.png

Figure 4. Steady-state temperatures vs. oil flow rate (NASA 35-mm, 50,000 RPM, $F_a = 667$ N, $T_{\text{oil,in}} = 394$ K). Dashed line: NASA baseline flow.

figures/oilflow_heat_generation.png

Figure 5. Total heat generation vs. oil flow rate. Same conditions as Figure **??**.

A notable feature of the results is that all temperatures *increase slightly* with increasing oil flow rate. At first glance, this appears counter-intuitive; however, it is a direct consequence of the high oil inlet temperature ($T_{\text{oil,in}} = 394$ K) being close to or above the oil sump equilibrium temperature. From Equation (**??**), the circulation cooling term $\dot{m}c_p(T_{\text{oil}} - T_{\text{oil,in}})$ is negative when $T_{\text{oil}} < T_{\text{oil,in}}$, meaning that fresh oil actually *adds* thermal energy to the sump. At low flow rates, the oil sump finds a lower equilibrium ($\sim$384 K via ambient loss alone); increasing flow pushes T_{oil} toward $T_{\text{oil,in}} = 394$ K, raising all component temperatures via the thermal network.

This observation is practically important: in systems where the oil is recirculated through a heat exchanger, the *inlet temperature* is a far more effective control variable than the volume flow rate. The results indicate that, for this bearing and speed, reducing $T_{\text{oil,in}}$ by 10 K would lower bearing temperatures more than doubling the flow rate.

4.3. Diametral Clearance Analysis

The initial diametral clearance P_d is swept over six values: 0, 5, 10, 15, 20, and 30 μm.

figures/clearance_transient_overlay.png

Figure 6. Transient inner race temperature for different initial diametral clearances (50,000 RPM, $F_a = 667$ N, $T_{\mathrm{oil,in}} = 394$ K).

figures/clearance_steadystate.png

Figure 7. Steady-state temperature (left) and total heat generation (right) vs. initial diametral clearance.

Result: within the present model formulation, no measurable thermal sensitivity to the tested clearance range (0–30 μm) was observed under the specified preload condition. All six cases converge to identical steady-state temperatures and heat generation within numerical precision.

Under a 667 N axial thrust, the bearing operates in a fully preloaded regime: all 16 balls are in contact at all times, the contact angles adjust to accommodate the load regardless of initial clearance, and the resulting load distribution and sliding velocities are virtually identical across the clearance range. The 0–30 μm clearance variation is much smaller than the axial displacement imposed by the 667 N load ($\delta_a \approx$ 20–40 μm), so the additional clearance is immediately consumed by the axial equilibrium.

To test whether this insensitivity persists under lighter loading, the sweep was repeated at $F_a = 100$ N with an extended clearance range of 0–100 μm. The result was identical: no detectable temperature variation across the entire range. This confirms that the observed insensitivity arises at least in part from the model's treatment of clearance as an initial quasi-static parameter; once the dynamic simulation begins, the contact geometry evolves through the 6-DOF force balance and thermal expansion independently of P_d. The current four-node LPTN cannot resolve clearance-dependent load-zone effects in the thermal feedback loop. In the physical system, larger clearances under light preload

would produce partial load zones with fewer loaded elements and different temperature distributions—an effect that requires circumferentially resolved thermal modeling.

Model limitation: the clearance insensitivity reported here should be interpreted as an observation within the present model structure, not as a universal physical conclusion. Two factors contribute: (a) the four-node LPTN averages all ball temperatures, making it structurally unable to resolve circumferential heat distribution shifts caused by partial load zones (see Section **??**); and (b) under axial preload, the Hertzian contact stiffness dominates the equilibrium geometry such that small clearance changes produce negligible shifts in contact angle and sliding velocity. Different behavior would be expected with a circumferentially resolved thermal model under (i) light preload with partial contact, (ii) larger clearances ($> 50\ \mu$m), or (iii) predominantly radial loading.

4.4. Load Direction Effect

The load direction is varied by rotating the resultant load vector $\boldsymbol{P}$ (magnitude $|\boldsymbol{P}| = 1000$ N) from nearly pure radial ($\theta = 10°$) to pure axial ($\theta = 90°$), where $F_a = |\boldsymbol{P}| \sin\theta$ and $F_r = |\boldsymbol{P}| \cos\theta$.

figures/loadratio_temperature.png

Figure 8. (**Left**) Steady-state temperatures vs. load angle θ ($|\boldsymbol{P}| = 1000$ N, 50,000 RPM, $T_{\text{oil,in}} = 394$ K). (**Right**) Inner–outer race temperature differential.

figures/loadratio_heat_breakdown.png

Figure 9. Heat source breakdown vs. load angle, showing all seven individual contributions: inner and outer race sliding ($H_{\text{slide,i}}$, $H_{\text{slide,o}}$), inner and outer race spin ($H_{\text{spin,i}}$, $H_{\text{spin,o}}$), translational cage drag (H_{drag}), churning (H_{churn}), and total (H_{total}). The spin$_i$ and churning components are negligibly small under the present operating conditions (see text). Conditions: same as Figure **??**.

Table **??** presents the numerical results.

Table 11. Load direction parametric study results ($|\boldsymbol{P}| = 1000$ N, 50,000 RPM).

θ	F_a (N)	F_r (N)	$T_{\mathbf{IR}}$ (K)	$\Delta T_{\mathbf{IR\text{-}OR}}$ (K)	$H_{\mathbf{total}}$ (W)	$H_{\mathbf{slide,o}}/H_{\mathbf{total}}$ (%)
10°	174	985	394.5	4.9	651	62
25°	423	906	397.5	5.5	709	59
45°	707	707	403.2	6.4	811	55
65°	906	423	407.1	7.0	872	54
80°	985	174	408.7	7.3	895	53
90°	1000	0	409.0	7.3	900	53

The load direction has a pronounced effect on thermal behavior:

- Inner race temperature increases by 15 K from $\theta = 10°$ to 90°.
- The inner–outer race differential increases by 50% (4.9 $\rightarrow$ 7.3 K).
- Total heat generation increases by 38% (651 $\rightarrow$ 900 W).
- Outer race sliding friction ($H_{\text{slide,o}}$) dominates total heat generation across all load angles, contributing 53–62%. Its fraction decreases with increasing axial load as inner race sliding grows.
- Inner race spinning ($H_{\text{spin,i}}$) is negligibly small (< 0.01 W) because the gyroscopic spin moment at the inner contact is resisted almost entirely by the outer contact. Churning

heat (H_{churn}) is likewise negligible due to the very low oil fill fraction ($\phi = 0.002$) and the small ball radius, which keep the effective mixture density—and thus the drag torque—near zero (see Section **??**).

5. Discussion

5.1. Mechanistic Interpretation

The load-direction results (Table **??**) can be explained through the contact mechanics: under pure axial load ($\theta = 90°$), all 16 balls carry equal loads but at a higher contact angle ($\alpha > \alpha_0$), increasing the gyroscopic moment and spin-induced micro-slip. The increased inner race sliding friction ($H_{\text{slide,i}}$ from 125 W to 263 W) arises because the inner race surface velocity $v_{\text{IR}} = \omega_{\text{IR}} \cdot r_{\text{contact}}$ increases with the higher effective contact radius at the elevated contact angle. Notably, the heat breakdown (Figure **??**) reveals that sliding friction at the two raceways accounts for $> 95\%$ of total heat generation at all load angles, with translational cage drag providing the remainder ($\approx$ 100–160 W). The inner and outer race spinning moments, as well as churning, contribute negligibly under these conditions; the former because gyroscopic spin is predominantly resisted at the outer race, and the latter because the under-race jet lubrication yields an extremely low cavity fill fraction ($\phi = 0.002$).

Under predominantly radial loading ($\theta = 10°$), fewer balls in the loaded zone carry concentrated loads, but the overall friction is lower because the reduced axial preload decreases the net normal load and contact stress.

5.2. Oil Flow Rate Paradox

The counter-intuitive oil flow result (Section **??**) is a consequence of the specific operating conditions: $T_{\text{oil,in}} = 394$ K is relatively high (near the ball temperature), and the oil sump reaches a lower equilibrium via ambient losses alone. In applications with cooler inlet oil ($T_{\text{oil,in}} < T_{\text{sump,eq}}$), the conventional trend (higher flow $\rightarrow$ lower temperature) would be recovered. This finding highlights the importance of reporting oil inlet temperature in thermal studies.

5.3. Comparison with Literature

The predicted temperature ranking ($T_{\text{ball}} > T_{\text{IR}} > T_{\text{OR}} > T_{\text{oil}}$) and the inner–outer race differential of 5–8 K are consistent with the experimental observations of Takabi and Khonsari [**?**], who measured outer race temperature rises of 5–15 K above inlet for similar DN values. The temperature rise magnitudes are within the same order, although direct comparison is limited by differences in bearing geometry and lubrication method.

5.4. Cross-Bearing Size Limitation

To assess the model's generalization beyond the validated 35-mm reference bearing, the same model (with geometry updated to the 120-mm bore bearing from NASA TP-2275) was applied without re-tuning any traction or network parameters. The predictions systematically under-predicted heat generation by approximately 3$\times$ at 5,000–12,000 RPM. This offset is attributed to: (i) increased churning losses in larger bearings due to higher oil volume fractions, (ii) size-dependent traction scaling, and (iii) different thermal boundary conditions for a housed 120-mm bearing.

5.5. Scope and Limitations

The parametric trends reported in this study apply specifically to:

- The NASA 35-mm bore ACBB geometry (Table **??**).
- The DN range 1.0–2.5 $\times$ 10^6.

- The MIL-L-23699 lubricant properties (Table **??**).
- The thermal network parameters in Table **??**, which carry an inherent uncertainty of ±10–30 K in absolute temperature (Section **??**).

Extension to other bearing sizes, lubricant types, or DN ranges would require re-validation of the churning model and thermal conductance values. The 120-mm cross-prediction demonstrates that direct extrapolation without re-calibration leads to significant errors.

6. Conclusions

A transient multi-physics simulation framework, validated against NASA TP-2275 experimental heat generation data (2.1% mean error, ±3% digitization uncertainty) and cross-checked against Palmgren/SKF friction torque correlations, was applied to investigate the thermal parametric sensitivities of a single 35-mm bore angular contact ball bearing at DN $= 1.75 \times 10^6$. Three parametric studies led to the following findings, which apply specifically to this bearing configuration and model formulation:

1. Under the tested conditions ($T_{\text{oil,in}} = 394$ K), increasing oil flow rate slightly increases bearing temperatures due to the warm-oil-in thermal coupling. This demonstrates that *oil inlet temperature* is a more effective thermal control variable than volume flow rate when the inlet is near the sump equilibrium.
2. Within the present model formulation, diametral clearance variations in the range 0–100 μm produced no detectable thermal effect under axial preload ($F_a = 100$–667 N). This observation reflects the model's treatment of clearance as an initial quasi-static parameter and the limitations of the four-node LPTN in resolving clearance-dependent load-zone effects.
3. Shifting the load direction from near-radial (10°) to pure axial (90°) at constant resultant magnitude (1000 N) increases inner race temperature by 15 K and total heat generation by 38%, driven by increased sliding and spin friction at higher contact angles.

The traction and churning model coefficients used in this study are representative of the 35-mm bearing class and are not yet demonstrated to be universal across bearing sizes; the 120-mm cross-prediction (Section **??**) confirms that these parameters are size-dependent. Future work should extend these investigations to larger bearing sizes with re-calibrated churning models, explore the effect of lower oil inlet temperatures to recover the conventional flow–cooling relationship, and develop circumferentially resolved thermal networks to properly capture clearance-dependent load-zone effects.

Author Contributions: Conceptualization, methodology, software, validation, formal analysis, investigation, data curation, writing—original draft preparation, visualization, Y.L. The author has read and agreed to the published version of the manuscript.

Funding: This research received no external funding.

Institutional Review Board Statement: Not applicable.

Informed Consent Statement: Not applicable.

Data Availability Statement: The simulation framework, all input configuration files, and post-processing scripts used in this study are available at https://github.com/YUXinluhk/BallBearing-Dynamics (release v1.0). A README with step-by-step reproduction instructions is included.

Conflicts of Interest: The author declares no conflicts of interest.

Abbreviations

The following abbreviations are used in this manuscript:

ACBB	Angular contact ball bearing
CTE	Coefficient of thermal expansion
DOF	Degree of freedom
EHL	Elasto-hydrodynamic lubrication
FBDF	Fixed-leading-coefficient backward differentiation formula
LPTN	Lumped-parameter thermal network

References

. Harris, T.A.; Kotzalas, M.N. *Rolling Bearing Analysis*, 5th ed.; CRC Press: Boca Raton, FL, USA, 2006.

. Takabi, J.; Khonsari, M.M. Experimental testing and thermal analysis of ball bearings. *Tribol. Int.* **2013**, *60*, 93–103.

. Parker, R.J. Comparison of predicted and experimental thermal performance of angular-contact ball bearings. NASA Technical Paper 2275, 1984.

. Palmgren, A. *Ball and Roller Bearing Engineering*, 3rd ed.; Burbank: Philadelphia, PA, USA, 1959.

. SKF Group. *Rolling Bearings*; SKF Publication PUB BU/P1 10000/2 EN; SKF Group: Gothenburg, Sweden, 2018.

. Gupta, P.K. *Advanced Dynamics of Rolling Elements*; Springer: New York, NY, USA, 1984.

. Stacke, L.E.; Fritzson, D.; Nordling, P. BEAST—A rolling bearing simulation tool. *Proc. Inst. Mech. Eng. Part K J. Multi-Body Dyn.* **1999**, *213*, 63–71.

. Jang, G.; Jeong, S.W. Nonlinear excitation model of ball bearing waviness in a rigid rotor supported by two or more ball bearings considering five degrees of freedom. *ASME J. Tribol.* **2004**, *126*, 82–90.

. Bizarre, L.; Nonato, F.; Cavalca, K.L. Formulation of five degrees of freedom ball bearing model accounting for the nonlinear stiffness and damping of elastohydrodynamic point contacts. *Mech. Mach. Theory* **2018**, *124*, 179–196.

. Rackauckas, C.; Nie, Q. DifferentialEquations.jl—A performant and feature-rich ecosystem for solving differential equations in Julia. *J. Open Res. Softw.* **2017**, *5*, 15.

. Zheng, D.; Chen, W.; Li, M. An optimized thermal network model to estimate thermal performances on a pair of angular contact ball bearings under oil-air lubrication. *Appl. Therm. Eng.* **2018**, *131*, 328–339.

. Liu, J.; Shao, Y. Overview of dynamic modelling and analysis of rolling element bearings with localized and distributed faults. *Nonlinear Dyn.* **2020**, *93*, 1765–1798.

. Hamrock, B.J.; Dowson, D. Isothermal elastohydrodynamic lubrication of point contacts: Part III—Fully flooded results. *ASME J. Lubr. Technol.* **1977**, *99*, 264–276.

. Bair, S.; Winer, W.O. A rheological model for elastohydrodynamic contacts based on the primary laboratory data. *ASME J. Lubr. Technol.* **1979**, *101*, 258–265.

Disclaimer/Publisher's Note: The statements, opinions and data contained in all publications are solely those of the individual author(s) and contributor(s) and not of MDPI and/or the editor(s). MDPI and/or the editor(s) disclaim responsibility for any injury to people or property resulting from any ideas, methods, instructions or products referred to in the content.