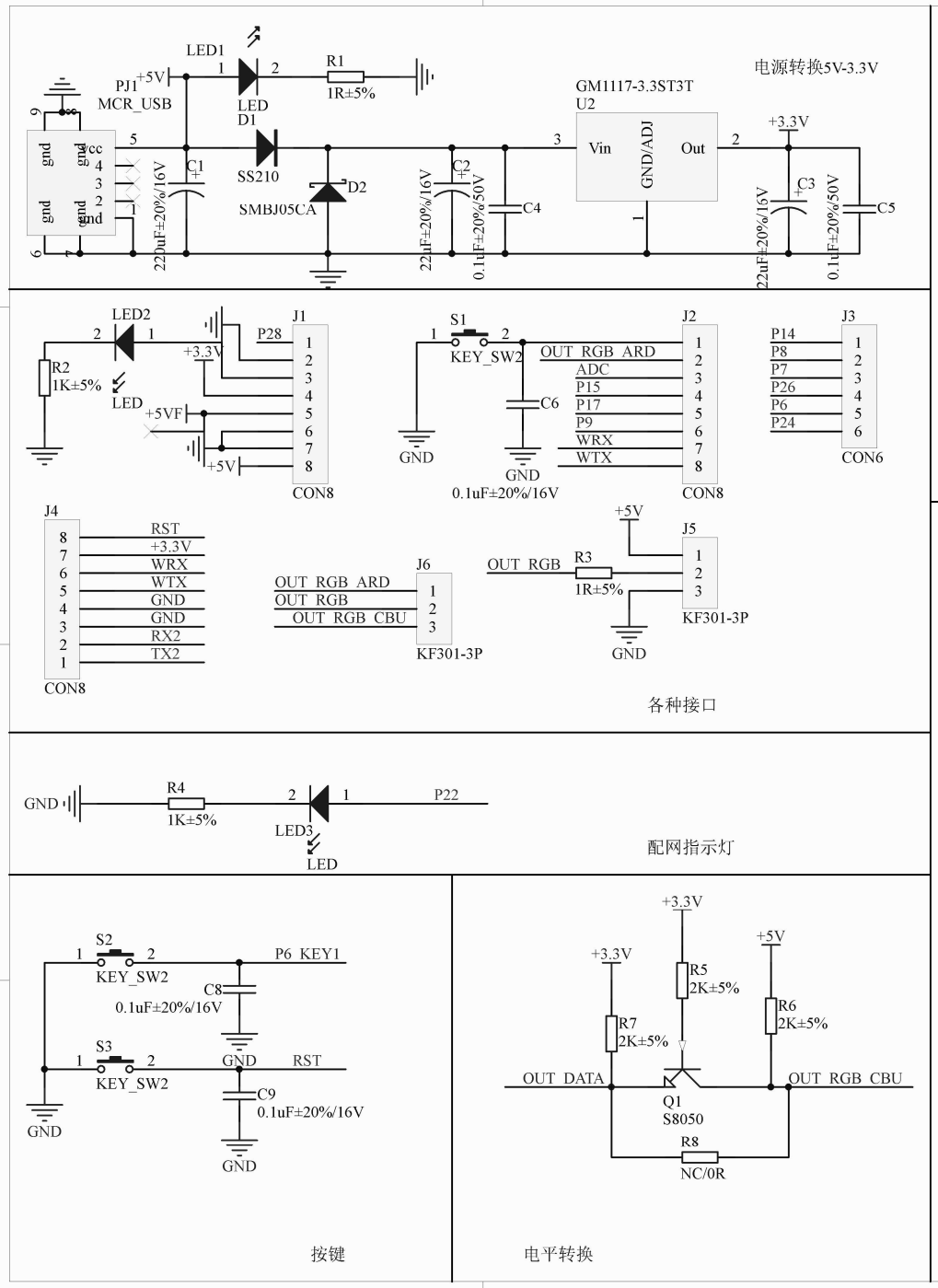

Title		
Size A4	Number	Revision
Date: 2021/5/27	Sheet of	
File: F:\兴趣爱好\涂鸦项目\涂鸦幻彩灯带(未命名).SchDoc	Drawn By:	