Missing - IMU/Encoder, Current sensor
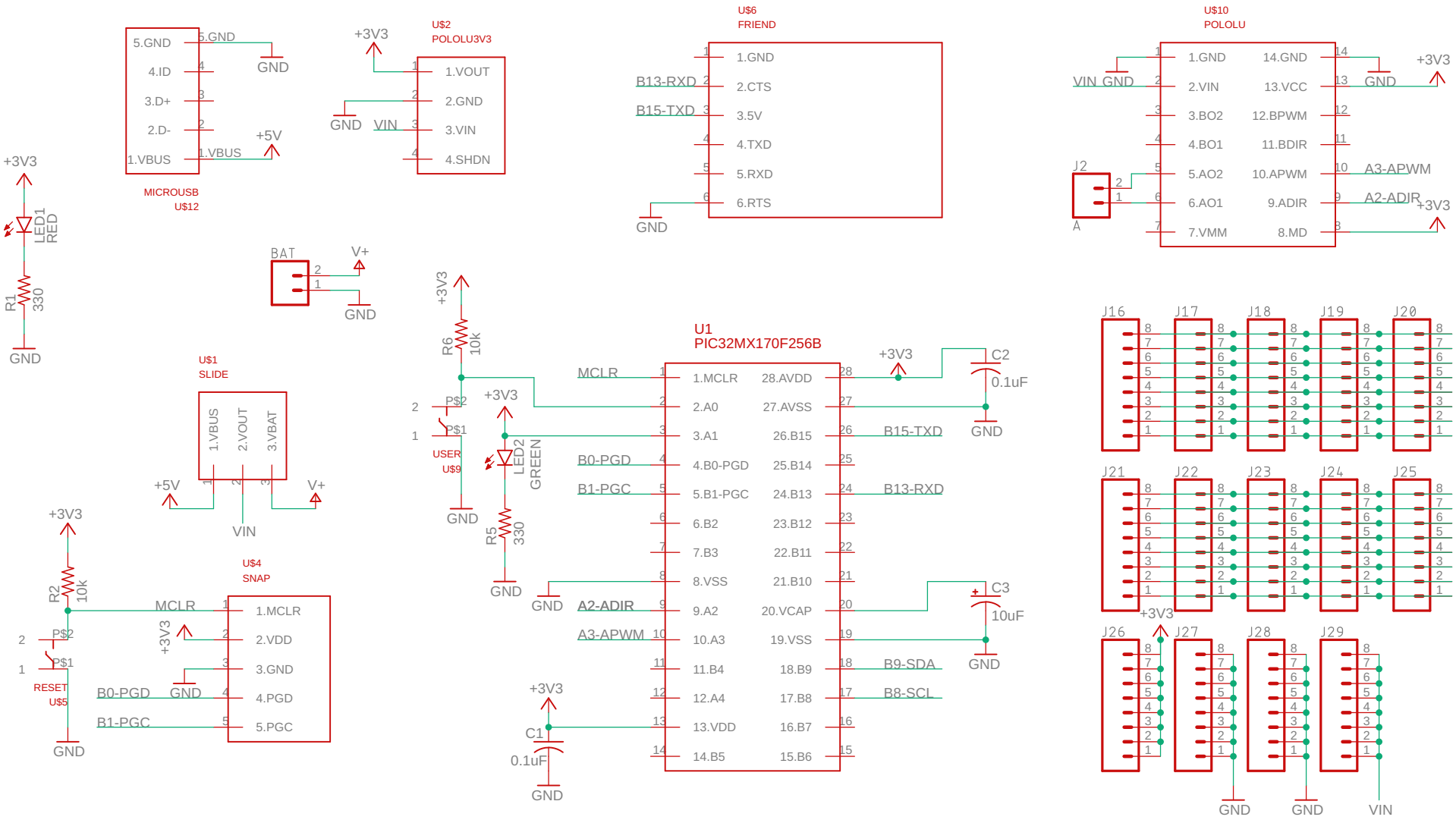
Need update - Driver