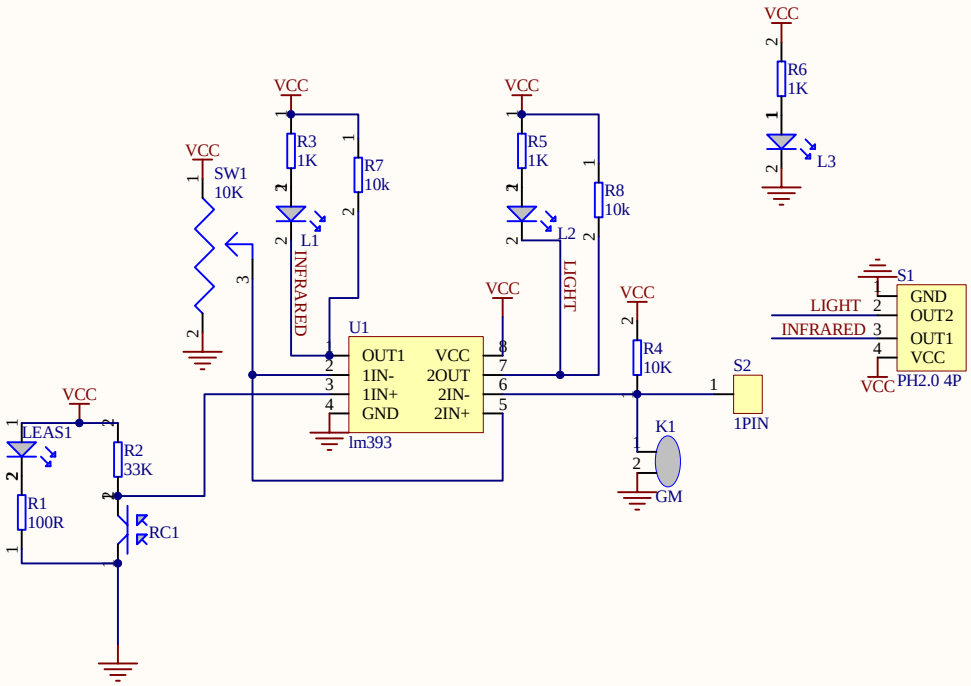

Title	**Infrared sensor v1.0**	
Size A4	Number 亚博智能	Revision
Date: 2017-8-9		Sheet of
File: D:\软件\..\infrad.SchDoc		Drawn By: