SKY130 Standard Cell Library

Design and Characterization Report

Non-Linear Delay Model (NLDM) Generation using PySpice & ngspice

Course	Digital Design II
Project	Project 1 — Standard Cell Library Design and Characterization
Process	SKY130 (SkyWater 130 nm)
Corner	TT | 25 °C | VDD = 1.8 V
Date	5th, April 2026

Group Members

- Seif-Eldien
- Yahia Kilany

GitHub Repository

https://github.com/Yahia-kilany/Standard-Cell-Library-Design-and-Characterization-SKY130

1. Introduction

This report documents the design and automated SPICE characterization of a 13-cell standard cell library using the SkyWater SKY130 130 nm open-source PDK. The primary deliverable is a set of Non-Linear Delay Model (NLDM) tables, which encode cell timing behavior as a function of input transition time and output load capacitance.

The library includes four logic gates at multiple drive strengths:

- Inverter (INVx1, INVx2, INVx4, INVx8)
- 2-input NAND (NAND2x1, NAND2x2, NAND2x4)
- 2-input NOR (NOR2x1, NOR2x2, NOR2x4)
- 3-input Minority(MIN3x1, MIN3x2, MIN3x4)

All simulations were performed under the Typical-Typical (TT) process corner at 25 °C with VDD = 1.8 V using ngspice via the PySpice Python interface.

2. Cell Design & Transistor Sizing

2.1 Sizing Methodology

The x1 base cell was sized to achieve approximately symmetric rise and fall propagation delays. The key sizing parameter is the PMOS-to-NMOS width ratio (KP), which compensates for the inherent mobility difference between holes and electrons in the SKY130 process.

The following sizing parameters were used throughout the library:

Parameter	Value	Description
W_N (x1)	0.42 µm	NMOS channel width (base)
KP	2.3728	PMOS/NMOS sizing ratio
W_P (x1)	KP × W_N ≈ 0.997 µm	PMOS channel width (base)
L_MIN	0.15 µm	Minimum gate length (SKY130)
VDD	1.8 V	Supply voltage

2.2 Drive Strength Scaling

Drive strength is achieved by linearly scaling transistor widths: an xN cell has widths N × W_N and N × W_P. Series-connected NFET stacks (NAND, NOR, MIN3) are scaled to preserve the total resistance to be equal to the resistance of the smallest NMOS transistor.

2.3 Cell-Specific Sizing Notes

- INV: Single NFET / PFET pair. KP ratio directly yields symmetric delay.
- NAND2: Series NFET stack, NFET width = 2 × N × W_N per transistor.
- NOR2: Series PFET stack, PFET width = 2 × N × W_P per transistor.
- MIN3: Pull-down has three parallel series branches (AB, AC, BC), each NMOS sized 2 × N × W_N; pull-up is the dual network with three series stages of parallel PMOS pairs, each transistor sized 2.5 × N × W_P.

See the diagrams in Appendix C.

3. SPICE Subcircuit Library

All 13 cells are defined in a single SPICE file (circuit.sp) generated by circuit_gen.py. Each cell is implemented as a .subckt block following the SKY130 primitive device naming convention. The port order for all cells is:

- [Input pins…] VGND VNB VPB VPWR Y

This matches the standard SKY130 standard-cell port convention, making the netlists compatible with the PDK's formal verification flows. The subcircuits are instantiated using PySpice's SubCircuitFactory class and printed to circuit.sp via the PySpice Circuit object.

Excerpt:

```
.subckt inv_x1 A VGND VNB VPB VPWR Y
Xmp Y A VPWR VPB sky130_fd_pr__pfet_01v8 l=0.15 w=0.9965680199999999
Xmn Y A VGND VNB sky130_fd_pr__nfet_01v8 l=0.15 w=0.42
.ends inv_x1
```

4. Characterization Methodology

4.1 Simulation Environment

Characterization was fully automated using PySpice + ngspice. For each (cell, drive strength, pin, input transition, output load) combination, a transient testbench was constructed programmatically. The simulation runs for 80 ns with a 10 ps time step.

4.2 NLDM Sweep Parameters

Parameter	Values
Input Transition (ns)	0.0100, 0.0231, 0.0531, 0.1225, 0.2823, 0.6507, 1.5000
Output Load (pF)	0.0005, 0.0013, 0.0035, 0.0094, 0.0249, 0.0662, 0.1758
Prop. Delay Threshold	50% of VDD (0.9 V)
Slew Threshold	20%–80% of VDD (0.36 V – 1.44 V)

This yields a 7 × 7 matrix for each of the four timing metrics per pin per cell variant, for a total of 13 cells × (2–3 pins) = several hundred individual SPICE simulations.

4.3 Timing Measurement

Timing values are extracted from ngspice transient waveforms by the first_crossing() and measure_delays() functions in utils.py using linear interpolation by parsing the raw data points from ngspice (all functions are negate unate with the input):

- cell_rise: Δt from Vin 50% falling, Vout 50% rising
- cell_fall: Δt from Vin 50% rising, Vout 50% falling
- rise_transition: Δt from Vout 20%, Vout 80% on a rising edge
- fall_transition: Δt from Vout 80%, Vout 20% on a falling edge

For certain combinations of input transition time and output load capacitance, negative propagation delays were observed in the INV and NAND2 characterization results. This is an artifact that arises when the input ramp is sufficiently slow relative to the cell's intrinsic drive strength, causing the output to begin switching before the input voltage reaches the 50% threshold. Consequently, when the standard Liberty 50%–50% propagation delay metric is applied, the output crossing is measured to precede the input crossing, yielding a negative value. Alternatively, it could be that the precision of the simulation is not sufficient to observe the transition. As negative delay entries carry no physical meaning in a static timing analysis context, these values were clamped to zero in the reported NLDM tables

4.4 Inactive Pin Biasing

For multi-input cells, non-characterized input pins are held at fixed bias voltages to ensure the cell can switch on every input transition:

- NAND2: inactive pin, VDD (enables pull-down path)
- NOR2: inactive pin, GND (enables pull-up path)
- MIN3: one inactive pin, GND, one inactive pin, VDD (minority logic condition)

5. Automation & Code Structure

The characterization was fully automated using PySpice as a Python interface to ngspice, The codebase is organized into four modules: *circuit_gen.py*, *utils.py*, a set of per-cell characterization scripts (*char_inv.py, char_nand2.py, char_nor2.py, char_min3.py*), and a bash script (*char_all.sh*) that launches all characterization scripts in parallel.

circuit_gen.py: gives the output *circuits.sp,* which contains the subcircuits for all 13 cells using PySpice's *SubCircuitFactory* class. Each cell is parameterized by drive strength N

utils.py: contains all shared simulation and measurement logic. The run_sweep() function iterates over every combination of input transition time and load capacitance, builds the corresponding testbench circuit, invokes ngspice via simulate(), and extracts the four timing metrics from the resulting waveforms. Timing extraction is performed by first_crossing(), which uses linear interpolation to find the precise time at which a waveform crosses a given threshold, and measure_delays(), which applies this to compute cell_rise, cell_fall, rise_transition, and fall_transition. Results are aggregated into pandas DataFrames and written to Excel workbooks via save_excel(), Each cell variant and input pin is organized into a dedicated sheet within a single Excel workbook per cell family.

Char_{cell}: Each per-cell script defines the testbench builder function for that cell, specifying the pulse source, inactive pin biasing, subcircuit instantiation, and load capacito

6. Delay vs. Load Capacity — Inverter Family

We plot the delays for the inverter family at transition time 0.1225ns vs the capacitive load, see Appendix B, and observer that:

Effect of capacitive load **:** We see that the delay scales roughly linearly with capacitance, but the log-scale x-axis makes it look like a sharp knee.

Effect of Drive Strength: We observe a decrease in delay as the size increases, For instance, notice that the INV_x8 is much faster than the INV_x1, staying below 0.2ns, while the INV_x1 nearly reaches 1ns for the cell fall and rise, as an x8 inverter has roughly 1/8th the effective output resistance allowing it to drive higher capacitive loads significantly lower delay.

Timing Symmetry: The cell rise and rise transition times are consistently higher than their fall counterparts across both cells, which is expected behavior in CMOS design. This asymmetry, while present, remains within a small margin and is primarily attributed to the difference in carrier mobility between PMOS and NMOS transistors. The relatively modest gap is a direct consequence of the simplified subcircuit models used, where only the Kp parameter is considered for the PMOS.

Transition times: The transition times mirror the behavior of the propagation delay. However, we see in the inv_x1 cell, the transitions exceed 1.25ns for higher loads, which would not be suitable for high-speed designs.

7. Analytical Comparison — RC Delay Model vs. SPICE

7.1 Elmore Delay Model

The Elmore delay model is an approximation that extends the basic RC delay formula by accounting for both the intrinsic drain capacitance of the switching transistor, delays are expressed as:

```
t_pHL = R_eff_N × (C_drain_N + C_L)
t_pLH = R_eff_P × (C_drain_P + C_L)
```

where *R_eff_N* and *R_eff_P* are the effective on-resistances of the NMOS and PMOS transistors respectively, extracted from SKY130 Tutorial 2 parameter. *C_drain* denotes the intrinsic drain capacitance (*C_d*).

7.2 Limitations Of RC Model

- Input transition insensitivity: The RC model assumes an ideal step input It cannot model how slow input transition affects the delay.

- Constant Resistance: MOSFET current does not scale linearly with V_DS, so R_eff is not a constant.

7.3 Comparison Point

The transistors are sized to have equal resistances in pull up and pull down networks as such the model cannot calculate them separately. Thus the RC model result is then compared against the corresponding average of the SPICE cell_rise and cell_fall values at the mid-point of the NLDM table. Since the Elmore model characterizes a single switching transistor path, the comparison for the NAND2, NOR2, and MIN3 gates is performed using the pin A timing results, as pin A drives the transistor closest to the output node in each respective pull-down or pull-up network.

Parameter	Value	Description
C_d	0.45 fF	Gate Capacitance of the smallest NMOS transistor C_n_d = ɣ C_g (assume ɣ= 1)
R	7.1904 Kohm	Resistance of the smallest NMOS transisitor
CL	9.4 fF	Load Capacitance
t_in	0.1225ns	Input transition

Metric	RC Model (ns)	SPICE (ns)	Error (%)
INVx1 — t_p	0.0785	0.1006	21.9
INVx2 — t_p	0.0447	0.0725	38.8
INVx4 —- t_p	0.0278	0.0511	45.5
INVx8 —- t_p	0.0193	0.0366	47.3
NAND2x1 — t_p	0.0894	0.0955	6.48
NAND2x2 — t_p	0.0556	0.0679	17.8
NAND2x4 —- t_p	0.0387	0.0496	21.9
NOR2x1 — t_p	0.0894	0.1027	12.9
NOR2x2 — t_p	0.0556	0.0736	24.4
NOR2x4 —- t_p	0.0387	0.0529	26.8
MIN3x2 — t_p	0.1253	0.1327	5.28
MIN3x2 — t_p	0.0915	0.1051	12.9
MIN3x4 —- t_p	0.0746	0.091	18

7.4 Discussion

The Elmore model underestimates the delay across all the cells and drive strengths. The error gets worse as the drive strength increases, because stronger (wider) transistors switch faster, and the model doesn't account for parameters like input rise time that start to dominate the total delay.

Among the cells, NAND2, NOR2 and MIN3 match SPICE results better, while the inverter has bigger errors. This may be because NAND2, NOR2 and MIN3 have more complex structures which increases the delay, which keeps behaviour closer to the model's assumptions.

In Conclusion, the Elmore model gives appropriate estimates, but becomes less accurate for stronger cells and faster switching.

8. Github commit history

- March 23 : Initial SPICE netlist files added for all four cell types.
- March 26: Subcircuit generator (circuit_gen.py) developed, along with a preliminary inverter delay simulation script and measurement point calibration. (Seif-Eldien)
- April 2-April 5: Full characterization infrastructure completed, including utils.py, per-cell sweep scripts (char_inv.py, char_nand2.py, char_nor2.py, char_maj3.py), parallel execution script, and final simulation runs. (Yahia Kilany)
- April 5 : Report writing (Yahia Kilany, Sief ELdeen)

Appendix A — Full NLDM Tables

This appendix contains the complete 7 × 7 NLDM matrices for all 13 cells. Tables are also available in the Excel workbooks included in the GitHub repository (results/ directory).

A.1 Inverter Family

INV_x1

cell_fall							
Transition Time \ Load Cap	0.5000 fF	1.3000 fF	3.5000 fF	9.4000 fF	24.9000 fF	66.2000 fF	175.8000 fF
0.0100 ns	0.011765194	0.016280737	0.027487811	0.056297384	0.131247334	0.330591048	0.859442813
0.0231 ns	0.016028021	0.020751301	0.032037006	0.061052809	0.136113034	0.335509389	0.864382339
0.0531 ns	0.02159991	0.028797838	0.043092899	0.072279966	0.14752634	0.347040482	0.875965447
0.1225 ns	0.027813298	0.039383601	0.061294673	0.098440602	0.173804074	0.373410035	0.902405125
0.2823 ns	0.034939455	0.052109682	0.085079496	0.142275596	0.235182142	0.434316213	0.963226613
0.6507 ns	0.040835302	0.065739831	0.114313366	0.200395951	0.343017698	0.576399879	1.10402457

1.5000 ns	0.041240627	0.076169232	0.146304293	0.272782398	0.487765188	0.844383478	1.431773643

cell_rise							
Transition Time \ Load Cap	0.5000 fF	1.3000 fF	3.5000 fF	9.4000 fF	24.9000 fF	66.2000 fF	175.8000 fF
0.0100 ns	0.010967311	0.01543225	0.02736168	0.057427947	0.135907992	0.344720444	0.898722118
0.0231 ns	0.016112559	0.02093594	0.03244127	0.062624275	0.141214996	0.350071069	0.904081845
0.0531 ns	0.022207151	0.030043264	0.044584143	0.07467937	0.153293859	0.362231834	0.916292413
0.1225 ns	0.029134335	0.041858255	0.064990186	0.102856004	0.181154027	0.390055428	0.944150592
0.2823 ns	0.037858784	0.056293055	0.092081119	0.152269691	0.246342963	0.454429612	1.008266653
0.6507 ns	0.048566536	0.074261741	0.125886856	0.218697111	0.367931687	0.604842183	1.156889047
1.5000 ns	0.061778335	0.096279078	0.168096392	0.302455863	0.533614095	0.904479744	1.503396591

rise_trans							
Transition Time \ Load Cap	0.5000 fF	1.3000 fF	3.5000 fF	9.4000 fF	24.9000 fF	66.2000 fF	175.8000 fF
0.0100 ns	0.007272673	0.013201942	0.02983617	0.073621036	0.188853522	0.496355412	1.31236093
0.0231 ns	0.011974271	0.016009208	0.030175192	0.073496982	0.188903073	0.496323512	1.312366312
0.0531 ns	0.018188827	0.023634536	0.03461398	0.073678488	0.188882977	0.496341088	1.312354428
0.1225 ns	0.028516709	0.037607012	0.052686014	0.083128454	0.18898891	0.496341191	1.31235431
0.2823 ns	0.046726388	0.060629239	0.085208386	0.12461325	0.208087546	0.496331728	1.31235854
0.6507 ns	0.0816379	0.100315143	0.138872013	0.203790061	0.301522083	0.531370626	1.312366045
1.5000 ns	0.15612821	0.17887824	0.23140368	0.33215273	0.49277774	0.73628686	1.37159697

	7	9	2	4	6	2	8

fall_trans							
Transition Time \ Load Cap	0.5000 fF	1.3000 fF	3.5000 fF	9.4000 fF	24.9000 fF	66.2000 fF	175.8000 fF
0.0100 ns	0.006042897	0.011486307	0.025380476	0.062193733	0.159644221	0.419803432	1.110485324
0.0231 ns	0.009391677	0.012412308	0.025262373	0.061981537	0.159652632	0.419836586	1.110476536
0.0531 ns	0.014935821	0.01949733	0.028911908	0.062291186	0.159650322	0.419807299	1.110485129
0.1225 ns	0.023082914	0.029480169	0.044029098	0.071083994	0.159807075	0.419815242	1.110484977
0.2823 ns	0.038561149	0.04955089	0.070705012	0.10711603	0.178430013	0.419837149	1.11047983
0.6507 ns	0.070597923	0.086256007	0.11692785	0.171860185	0.26297619	0.455911703	1.110485088
1.5000 ns	0.141374645	0.160806617	0.203465514	0.282676538	0.419638783	0.647474574	1.174164655

INV_x2

cell_fall							
Transition Time \ Load Cap	0.5000 fF	1.3000 fF	3.5000 fF	9.4000 fF	24.9000 fF	66.2000 fF	175.8000 fF
0.0100 ns	0.009958608	0.012226892	0.018030056	0.032180866	0.06850438	0.16454373	0.41916081
0.0231 ns	0.013065141	0.01660107	0.022537126	0.036923301	0.07332713	0.169484026	0.424128461
0.0531 ns	0.017587067	0.022612074	0.031748647	0.04811679	0.084714145	0.181006421	0.43574976
0.1225 ns	0.022507265	0.029318474	0.04378211	0.069080066	0.111180684	0.207466711	0.462303327
0.2823 ns	0.025672938	0.036195472	0.057809785	0.096886412	0.161633808	0.269010756	0.523525724
0.6507 ns	0.024607239	0.039864018	0.0716016	0.130008637	0.229379808	0.392502659	0.665898981
1.5000 ns	0.01145844	0.03254014	0.07788997	0.16333887	0.31170349	0.56225806	0.96700815

		6	8	5	9		

cell_rise							
Transition Time \ Load Cap	0.5000 fF	1.3000 fF	3.5000 fF	9.4000 fF	24.9000 fF	66.2000 fF	175.8000 fF
0.0100 ns	0.009639336	0.011921083	0.018142676	0.033166029	0.072374241	0.176109221	0.451027907
0.0231 ns	0.013949254	0.017377655	0.023429186	0.038719651	0.077853593	0.181610048	0.456568143
0.0531 ns	0.019498955	0.024575459	0.034277177	0.051019826	0.090208472	0.194103688	0.469130315
0.1225 ns	0.026398728	0.03420572	0.049498838	0.075930895	0.119099825	0.222773836	0.497833164
0.2823 ns	0.035661474	0.046867587	0.070132327	0.111766922	0.17853062	0.289451521	0.564041347
0.6507 ns	0.049486664	0.065013363	0.098011033	0.160252005	0.265606996	0.432864586	0.718012261
1.5000 ns	0.072062646	0.092564551	0.138068164	0.226603899	0.384338926	0.648864982	1.0616615

rise_trans							
Transition Time \ Load Cap	0.5000 fF	1.3000 fF	3.5000 fF	9.4000 fF	24.9000 fF	66.2000 fF	175.8000 fF
0.0100 ns	0.006247367	0.009097999	0.017434645	0.03823296	0.09496545	0.246406689	0.648567294
0.0231 ns	0.010767726	0.01235966	0.017378269	0.038394142	0.094879693	0.246373904	0.648576865
0.0531 ns	0.016703025	0.02016407	0.024546595	0.040987962	0.094984789	0.246412754	0.648561717
0.1225 ns	0.025285293	0.030729803	0.04039562	0.056924528	0.100166834	0.246407313	0.648568304
0.2823 ns	0.041003155	0.048337796	0.064885738	0.092472868	0.13596987	0.255704045	0.648581065
0.6507 ns	0.072056247	0.082820196	0.106913984	0.15154722	0.221132609	0.332242424	0.663051302
1.5000 ns	0.14119032	0.153551346	0.18473743	0.249605026	0.362821073	0.536843841	0.822582231

fall_trans							
Transition Time \ Load Cap	0.5000 fF	1.3000 fF	3.5000 fF	9.4000 fF	24.9000 fF	66.2000 fF	175.8000 fF
0.0100 ns	0.004737789	0.006966522	0.014203044	0.031567521	0.077899089	0.202302723	0.532928639
0.0231 ns	0.008522906	0.009774837	0.014654654	0.031220794	0.077728693	0.202319306	0.532920815
0.0531 ns	0.013379107	0.015309556	0.020181049	0.033924017	0.07789632	0.202291465	0.532924182
0.1225 ns	0.019021829	0.024166402	0.033366007	0.048935859	0.08391674	0.202320312	0.532931849
0.2823 ns	0.033403766	0.040452622	0.054206421	0.078885738	0.119553088	0.21407134	0.532936751
0.6507 ns	0.062640603	0.072183326	0.092226377	0.129341764	0.191759214	0.294054057	0.553161424
1.5000 ns	0.12799432	0.139066312	0.166000276	0.219284952	0.312764389	0.469628241	0.724212691

INVx4

cell_fall							
Transition Time \ Load Cap	0.5000 fF	1.3000 fF	3.5000 fF	9.4000 fF	24.9000 fF	66.2000 fF	175.8000 fF
0.0100 ns	0.008747864	0.009818936	0.012650043	0.01968378	0.036931018	0.081933417	0.200945227
0.0231 ns	0.01157747	0.012730708	0.016966562	0.02417495	0.041563925	0.086702147	0.205773897
0.0531 ns	0.014789135	0.01696409	0.022981766	0.033628795	0.052605992	0.097887657	0.217088158
0.1225 ns	0.016879183	0.020891468	0.029593859	0.046321741	0.074888717	0.123844144	0.243049082
0.2823 ns	0.016295758	0.022229468	0.035235278	0.060591356	0.104511259	0.177576648	0.303236859
0.6507 ns	0.007653041	0.016104837	0.03509139	0.072349472	0.138419068	0.250928409	0.433442929
1.5000 ns	0	0	0.017375354	0.070809475	0.167856507	0.336951576	0.618116157

cell_rise							
Transition Time \ Load Cap	0.5000 fF	1.3000 fF	3.5000 fF	9.4000 fF	24.9000 fF	66.2000 fF	175.8000 fF
0.0100 ns	0.008784295	0.009868533	0.012877782	0.020681758	0.040413881	0.091983406	0.227805176
0.0231 ns	0.012596467	0.014500617	0.018590893	0.026158254	0.045814844	0.097268837	0.233124728
0.0531 ns	0.01744071	0.020611287	0.026588893	0.037993701	0.058222975	0.109639408	0.245634546
0.1225 ns	0.024080537	0.028323421	0.037929364	0.055952046	0.085694617	0.138507874	0.274311533
0.2823 ns	0.033676703	0.039907945	0.053706754	0.080995229	0.12795933	0.203583299	0.340966578
0.6507 ns	0.050279404	0.058572603	0.077736647	0.116567212	0.187321278	0.306886868	0.494872917
1.5000 ns	0.082221213	0.092554312	0.117769301	0.171234693	0.272128398	0.452853095	0.750433655
rise_trans							
Transition Time \ Load Cap	0.5000 fF	1.3000 fF	3.5000 fF	9.4000 fF	24.9000 fF	66.2000 fF	175.8000 fF
0.0100 ns	0.005546623	0.006069618	0.009919308	0.020977076	0.048406674	0.123009003	0.321032028
0.0231 ns	0.010263716	0.010966451	0.013252733	0.021603923	0.048358515	0.123023494	0.321038017
0.0531 ns	0.015666255	0.016962564	0.02155397	0.027146079	0.050146971	0.122919464	0.321008481
0.1225 ns	0.023088036	0.025996927	0.032114506	0.044104476	0.063552802	0.125363621	0.321012185
0.2823 ns	0.038367586	0.042326693	0.052564843	0.071840913	0.102669925	0.155121862	0.324440055
0.6507 ns	0.070130306	0.075711034	0.089180825	0.117718574	0.168361651	0.24712161	0.385646652
1.5000 ns	0.143234771	0.148560822	0.164123315	0.2016984	0.27675611	0.405836727	0.60066717
fall_trans							

Transition Time \ Load Cap	0.5000 fF	1.3000 fF	3.5000 fF	9.4000 fF	24.9000 fF	66.2000 fF	175.8000 fF
0.0100 ns	0.003679784	0.004893125	0.008397344	0.016873588	0.037812019	0.095324353	0.249046334
0.0231 ns	0	0.008590138	0.010402813	0.016523162	0.037732526	0.095402764	0.249062876
0.0531 ns	0.011005357	0.013347489	0.015987933	0.022143504	0.03967553	0.095330852	0.249042896
0.1225 ns	0.018365959	0.020277488	0.025526383	0.035974809	0.054029215	0.099308993	0.249064675
0.2823 ns	0.03020984	0.034382531	0.042832034	0.058847964	0.086511479	0.132302105	0.256016179
0.6507 ns	0.060252767	0.065026254	0.076251717	0.099434038	0.140952987	0.211189432	0.32686352
1.5000 ns	0.129443017	0.133757196	0.146681668	0.177591773	0.236873088	0.342581962	0.517789078

INVx8

cell_fall							
Transition Time \ Load Cap	0.5000 fF	1.3000 fF	3.5000 fF	9.4000 fF	24.9000 fF	66.2000 fF	175.8000 fF
0.0100 ns	0.008254418	0.008798284	0.010217484	0.013906841	0.022923213	0.045443602	0.104538638
0.0231 ns	0.011081055	0.011477259	0.013174738	0.018178864	0.02720067	0.04991987	0.10911634
0.0531 ns	0.01338356	0.014379865	0.017234921	0.024313745	0.036930261	0.060581742	0.119924443
0.1225 ns	0.013717226	0.015648717	0.020674727	0.031315976	0.05069798	0.084067249	0.144966138
0.2823 ns	0.010539804	0.013563245	0.021085673	0.036617515	0.065725274	0.11674788	0.201137538
0.6507 ns	0	0	0.012392984	0.03497083	0.077531305	0.153747449	0.282742733
1.5000 ns	0	0	0	0.012170233	0.073403596	0.184667313	0.377540028
cell_rise							
Transition	0.5000 fF	1.3000 fF	3.5000 fF	9.4000 fF	24.9000 fF	66.2000 fF	175.8000 fF

Time \ Load Cap							
0.0100 ns	0.008361636	0.00888181	0.010341993	0.014615362	0.024908247	0.050334655	0.117326945
0.0231 ns	0.011967979	0.012739223	0.015425535	0.020076644	0.029854091	0.055305637	0.122399082
0.0531 ns	0.016288058	0.017819646	0.02194507	0.029085874	0.042201185	0.06767826	0.134789667
0.1225 ns	0.022610901	0.024933338	0.030415359	0.042015753	0.062614213	0.096548686	0.16347554
0.2823 ns	0.032676898	0.035859914	0.043639583	0.060302407	0.091599838	0.145295731	0.230824908
0.6507 ns	0.051472592	0.055676908	0.066102221	0.08895445	0.133617524	0.215153205	0.3502756
1.5000 ns	0.090117197	0.095145117	0.108156096	0.138388812	0.199813444	0.316233429	0.52232289
rise_trans							
Transition Time \ Load Cap	0.5000 fF	1.3000 fF	3.5000 fF	9.4000 fF	24.9000 fF	66.2000 fF	175.8000 fF
0.0100 ns	0.005535855	0.005542578	0.006678958	0.011586531	0.025276959	0.061915911	0.158677514
0.0231 ns	0.009730599	0.010355738	0.011328481	0.013501866	0.025320038	0.061960966	0.158703786
0.0531 ns	0.015089937	0.015916958	0.017302078	0.022275086	0.03091293	0.062342008	0.158737861
0.1225 ns	0.021080162	0.023506679	0.02679394	0.035090555	0.048317005	0.073437203	0.159289024
0.2823 ns	0.035995431	0.038813615	0.044074305	0.056258721	0.078453547	0.113718265	0.181676738
0.6507 ns	0.068011204	0.070716382	0.077507024	0.094262677	0.127904299	0.186141805	0.274690232
1.5000 ns	0.141169697	0.143637483	0.15084651	0.170433082	0.21544984	0.303917886	0.450004117
fall_trans							
Transition Time \ Load Cap	0.5000 fF	1.3000 fF	3.5000 fF	9.4000 fF	24.9000 fF	66.2000 fF	175.8000 fF

0.0100 ns	0.003375979	0.003629484	0.005208766	0.009354258	0.020764931	0.048738294	0.124780146
0.0231 ns	0	0	0.009081961	0.011691862	0.020942495	0.048712669	0.124794146
0.0531 ns	0.012122148	0.011743222	0.014190489	0.018420666	0.025389945	0.049831045	0.124868794
0.1225 ns	0.016066214	0.017749939	0.021248772	0.027936688	0.040585863	0.062037942	0.1265807
0.2823 ns	0.02929044	0.030762813	0.035463279	0.045561343	0.064510727	0.097310326	0.153791319
0.6507 ns	0.057880022	0.060163249	0.066166387	0.079896507	0.106750767	0.1558403	0.2386998
1.5000 ns	0.127394286	0.129095657	0.134502193	0.15061798	0.186741619	0.256204582	0.380288173

A.2 NAND2 Family

NAND2_x1_pin A

cell_fall							
Transition Time \ Load Cap	0.5000 fF	1.3000 fF	3.5000 fF	9.4000 fF	24.9000 fF	66.2000 fF	175.8000 fF
0.0100 ns	0.012539649	0.015858499	0.024503303	0.04665852	0.104302596	0.257644619	0.664422615
0.0231 ns	0.016446308	0.020073232	0.028829215	0.051112662	0.108866558	0.262239903	0.669040467
0.0531 ns	0.021388086	0.026766186	0.038599663	0.061654016	0.119522979	0.27300405	0.679841504
0.1225 ns	0.026134382	0.034985288	0.052970038	0.084882389	0.144209274	0.297684884	0.704561533
0.2823 ns	0.029351873	0.042360879	0.069266669	0.117909722	0.199424411	0.354855316	0.761490101
0.6507 ns	0.024677566	0.043953402	0.083674618	0.156447876	0.280189129	0.48603816	0.893568543
1.5000 ns	0	0.026153572	0.083977345	0.191426347	0.37648168	0.688618165	1.201386154
cell_rise							

Transition Time \ Load Cap	0.5000 fF	1.3000 fF	3.5000 fF	9.4000 fF	24.9000 fF	66.2000 fF	175.8000 fF
0.0100 ns	0.014126467	0.019137087	0.031189372	0.061935934	0.140851349	0.349853383	0.903919661
0.0231 ns	0.019677489	0.024036652	0.035989851	0.066812278	0.145888914	0.355024152	0.909164639
0.0531 ns	0.027422712	0.034401513	0.047646594	0.078198826	0.157544604	0.366981681	0.921283278
0.1225 ns	0.038258473	0.048830148	0.069791797	0.106120557	0.184902988	0.394455423	0.948974774
0.2823 ns	0.05369404	0.069083061	0.100982659	0.157807985	0.24997426	0.458465432	1.012832349
0.6507 ns	0.078827018	0.099958293	0.145203306	0.231044033	0.374929616	0.60925473	1.161388892
1.5000 ns	0.123592336	0.152000429	0.214124052	0.335510418	0.553235721	0.914502661	1.509349975
rise_trans							
Transition Time \ Load Cap	0.5000 fF	1.3000 fF	3.5000 fF	9.4000 fF	24.9000 fF	66.2000 fF	175.8000 fF
0.0100 ns	0.011080879	0.01715217	0.032855441	0.076475559	0.191753861	0.499227885	1.315252371
0.0231 ns	0.012610632	0.016807167	0.032592882	0.076531389	0.191770044	0.499227409	1.315238792
0.0531 ns	0.021366414	0.024300678	0.035978464	0.076537834	0.191737236	0.499231752	1.315249779
0.1225 ns	0.03151895	0.039638866	0.053419754	0.08494586	0.191767731	0.49923093	1.315250144
0.2823 ns	0.050446422	0.062148171	0.085332693	0.124654609	0.209457676	0.499235403	1.315248206
0.6507 ns	0.084603542	0.100681332	0.136006545	0.199915977	0.299509519	0.532606162	1.315242413
1.5000 ns	0.156545556	0.175922449	0.222606407	0.318268344	0.480406168	0.730461532	1.372483716
fall_trans							
Transition Time \ Load	0.5000 fF	1.3000 fF	3.5000 fF	9.4000 fF	24.9000 fF	66.2000 fF	175.8000 fF

Cap							
0.0100 ns	0.008342603	0.011911936	0.023053115	0.051094673	0.126610242	0.328282187	0.863626039
0.0231 ns	0.010697667	0.013045031	0.02288588	0.051307539	0.126691379	0.328324637	0.863617325
0.0531 ns	0.016044179	0.020392893	0.027012237	0.051840541	0.126642753	0.328270368	0.863625496
0.1225 ns	0.024078142	0.02993635	0.041115076	0.063579425	0.128389019	0.328318682	0.863608946
0.2823 ns	0.039641792	0.048232782	0.065050233	0.096685815	0.154742746	0.330729019	0.863626112
0.6507 ns	0.07221569	0.08419234	0.108677022	0.154329717	0.23434324	0.38629516	0.865820089
1.5000 ns	0.141202904	0.157095081	0.191981705	0.257517797	0.372793221	0.575019652	0.976171649

NAND2_x1_pin B

cell_fall							
Transition Time \ Load Cap	0.5000 fF	1.3000 fF	3.5000 fF	9.4000 fF	24.9000 fF	66.2000 fF	175.8000 fF
0.0100 ns	0.016126838	0.019449503	0.027757371	0.049754423	0.107370132	0.260682962	0.667457395
0.0231 ns	0.019935747	0.023409678	0.032054545	0.054263061	0.111987714	0.265336494	0.672125113
0.0531 ns	0.026479607	0.030554332	0.041000439	0.063764572	0.121629387	0.27508077	0.681909642
0.1225 ns	0.03322551	0.040231955	0.05527107	0.083844599	0.143298724	0.297034579	0.704004291
0.2823 ns	0.038378296	0.049804316	0.073309762	0.115922294	0.190374022	0.347192644	0.7546442
0.6507 ns	0.034608591	0.052679524	0.089810192	0.156294124	0.266932001	0.458464776	0.87067109
1.5000 ns	0.009657262	0.03652393	0.092677612	0.19488229	0.365415056	0.646212658	1.132484408
cell_rise							
Transition Time \ Load	0.5000 fF	1.3000 fF	3.5000 fF	9.4000 fF	24.9000 fF	66.2000 fF	175.8000 fF

Cap							
0.0100 ns	0.021148735	0.025985213	0.037663687	0.068126254	0.146862185	0.355811923	0.909881303
0.0231 ns	0.026725509	0.030966265	0.042832432	0.07337378	0.15221619	0.36123529	0.915330007
0.0531 ns	0.037629405	0.043216354	0.054800835	0.085258726	0.164205119	0.373348857	0.927515466
0.1225 ns	0.055416078	0.063492619	0.080341552	0.113451232	0.192008084	0.401117876	0.955340342
0.2823 ns	0.080326429	0.091845164	0.118288556	0.169230909	0.257440904	0.4655751	1.019468811
0.6507 ns	0.116786256	0.133569359	0.171924925	0.24963471	0.386361772	0.616779446	1.168462667
1.5000 ns	0.178282448	0.200965903	0.254022639	0.364898953	0.572416559	0.925623295	1.516928038
rise_trans							
Transition Time \ Load Cap	0.5000 fF	1.3000 fF	3.5000 fF	9.4000 fF	24.9000 fF	66.2000 fF	175.8000 fF
0.0100 ns	0.017413886	0.02324676	0.039027747	0.082533788	0.198138956	0.505746048	1.321972793
0.0231 ns	0.016883862	0.02263372	0.038661647	0.082716938	0.198056673	0.50577846	1.321970148
0.0531 ns	0.022279753	0.027078586	0.04092513	0.082645481	0.198133229	0.505763037	1.321973791
0.1225 ns	0.036064006	0.042372107	0.055273245	0.089229289	0.198140596	0.505762481	1.321973791
0.2823 ns	0.056438154	0.066990125	0.088736633	0.126704176	0.214114937	0.505773303	1.321973287
0.6507 ns	0.089335275	0.105737142	0.140765822	0.202963993	0.301530255	0.537669758	1.321969814
1.5000 ns	0.148138023	0.171886263	0.223323797	0.321241474	0.482610965	0.732305928	1.377988
fall_trans							
Transition Time \ Load Cap	0.5000 fF	1.3000 fF	3.5000 fF	9.4000 fF	24.9000 fF	66.2000 fF	175.8000 fF
0.0100 ns	0.00896643	0.01271781	0.02285051	0.05129552	0.12667497	0.32832160	0.86362054

	6	6	4	3		4	4
0.0231 ns	0.008429464	0.012702715	0.022445172	0.051173948	0.12671721	0.328314424	0.863611987
0.0531 ns	0.013236978	0.016688427	0.025213152	0.051600363	0.126602458	0.328307094	0.863625061
0.1225 ns	0.020731489	0.024978359	0.035077951	0.058588183	0.127823791	0.328322856	0.863604224
0.2823 ns	0.036689132	0.042380511	0.055582354	0.083038587	0.14432661	0.330190605	0.863619321
0.6507 ns	0.070691498	0.077688702	0.095106063	0.131338142	0.202468776	0.365427995	0.865805942
1.5000 ns	0.138476099	0.147187893	0.170807881	0.221401725	0.316613713	0.500820815	0.936152562

NAND2_x2_pin A

cell_fall							
Transition Time \ Load Cap	0.5000 fF	1.3000 fF	3.5000 fF	9.4000 fF	24.9000 fF	66.2000 fF	175.8000 fF
0.0100 ns	0.010487446	0.012179826	0.016365884	0.026640137	0.05285578	0.122500576	0.30707622
0.0231 ns	0.013296315	0.01593949	0.020444481	0.03087476	0.057290002	0.126979691	0.311577945
0.0531 ns	0.016889093	0.020475817	0.027285399	0.040977265	0.067677298	0.137475485	0.322135745
0.1225 ns	0.019606022	0.024643965	0.035368026	0.055915893	0.091396756	0.161716751	0.346357328
0.2823 ns	0.018208258	0.025439684	0.04163345	0.072709734	0.126754052	0.217692206	0.402375927
0.6507 ns	0.004430354	0.015172475	0.039040471	0.085393437	0.166945148	0.305229338	0.533265541
1.5000 ns	0	0	0.009234752	0.077422473	0.19875642	0.407501068	0.753390238
cell_rise							
Transition Time \ Load Cap	0.5000 fF	1.3000 fF	3.5000 fF	9.4000 fF	24.9000 fF	66.2000 fF	175.8000 fF

0.0100 ns	0.012592881	0.014829198	0.021337084	0.037315516	0.077025921	0.181067955	0.456165223
0.0231 ns	0.018235254	0.020545612	0.026412608	0.042182191	0.082061381	0.186328125	0.461538915
0.0531 ns	0.025621316	0.029520826	0.037930336	0.05414207	0.093852575	0.198400557	0.473913918
0.1225 ns	0.036539912	0.042673719	0.055713103	0.080024945	0.122335244	0.226537511	0.502275616
0.2823 ns	0.053641957	0.062304208	0.081753976	0.119448023	0.183164664	0.293035652	0.568074214
0.6507 ns	0.084277372	0.096099454	0.123193494	0.177869323	0.276165019	0.438606749	0.72226553
1.5000 ns	0.143744787	0.159434807	0.196222778	0.272080136	0.414511094	0.665421971	1.069753496
rise_trans							
Transition Time \ Load Cap	0.5000 fF	1.3000 fF	3.5000 fF	9.4000 fF	24.9000 fF	66.2000 fF	175.8000 fF
0.0100 ns	0.009223091	0.011717846	0.019389435	0.041060633	0.097620912	0.249218433	0.651421208
0.0231 ns	0.011769128	0.01329121	0.020282975	0.04104681	0.097784193	0.249245054	0.65140435
0.0531 ns	0.019702782	0.020981669	0.025896373	0.042996885	0.097682778	0.249220129	0.651420885
0.1225 ns	0.028413962	0.032947983	0.041448569	0.057761677	0.102261265	0.249224598	0.651418475
0.2823 ns	0.044737727	0.051422044	0.065864147	0.09226455	0.136151607	0.257787593	0.651403143
0.6507 ns	0.07595965	0.08468295	0.105229765	0.147250077	0.21751659	0.331282678	0.665077726
1.5000 ns	0.143022492	0.153033783	0.178954798	0.236808046	0.346835565	0.525791843	0.819341634
fall_trans							
Transition Time \ Load Cap	0.5000 fF	1.3000 fF	3.5000 fF	9.4000 fF	24.9000 fF	66.2000 fF	175.8000 fF
0.0100 ns	0.006028496	0.008077988	0.012485757	0.025837544	0.059493427	0.150208357	0.391531317

0.0231 ns	0.009693073	0.010770453	0.01423863	0.025575675	0.059634507	0.150295742	0.391534695
0.0531 ns	0.014174975	0.016278505	0.021219311	0.030004047	0.05976	0.150244809	0.391523446
0.1225 ns	0.021509059	0.024395895	0.031335836	0.044474271	0.070173648	0.151000564	0.391517246
0.2823 ns	0.035447196	0.040255392	0.050400387	0.070109181	0.105121012	0.173399912	0.392053771
0.6507 ns	0.06512958	0.071814578	0.086713886	0.115419956	0.166618163	0.256252771	0.437335849
1.5000 ns	0.129078881	0.137653434	0.158323028	0.199875478	0.274219186	0.404907313	0.629849798

NAND2_x2_pin B

cell_fall							
Transition Time \ Load Cap	0.5000 fF	1.3000 fF	3.5000 fF	9.4000 fF	24.9000 fF	66.2000 fF	175.8000 fF
0.0100 ns	0.013877835	0.015292119	0.01958442	0.029639907	0.055853048	0.125447321	0.310004463
0.0231 ns	0.017802609	0.019467484	0.023697594	0.034004073	0.060406961	0.130054777	0.314628378
0.0531 ns	0.023651868	0.025663847	0.030803465	0.04302285	0.069731984	0.139550931	0.324216099
0.1225 ns	0.028109442	0.031388767	0.040240496	0.057785115	0.090341276	0.161186007	0.346089269
0.2823 ns	0.028335192	0.034930594	0.048824557	0.07630108	0.124234487	0.209393772	0.396027567
0.6507 ns	0.015710844	0.025861302	0.048369344	0.091690853	0.166355191	0.291171802	0.509018992
1.5000 ns	0	0	0.021347991	0.087583051	0.202947111	0.395655043	0.709771589
cell_rise							
Transition Time \ Load Cap	0.5000 fF	1.3000 fF	3.5000 fF	9.4000 fF	24.9000 fF	66.2000 fF	175.8000 fF

0.0100 ns	0.019626625	0.022015733	0.028149104	0.043706583	0.083119602	0.187040405	0.462062725
0.0231 ns	0.025292135	0.027703392	0.033566473	0.049048254	0.088596634	0.192592966	0.467686323
0.0531 ns	0.036351286	0.039560083	0.046124345	0.061339724	0.100830486	0.204990497	0.480201096
0.1225 ns	0.054820036	0.058699212	0.068738748	0.089333842	0.129674722	0.233580842	0.508836116
0.2823 ns	0.081496606	0.087820382	0.102793684	0.134642182	0.192986668	0.300465271	0.575077038
0.6507 ns	0.124216487	0.133147095	0.154591431	0.201924232	0.292244983	0.448274934	0.72972979
1.5000 ns	0.200232781	0.212321043	0.242019804	0.308129132	0.440194422	0.681479862	1.079017927
rise_trans							
Transition Time \ Load Cap	0.5000 fF	1.3000 fF	3.5000 fF	9.4000 fF	24.9000 fF	66.2000 fF	175.8000 fF
0.0100 ns	0.015748807	0.018131205	0.025749779	0.04734059	0.104020931	0.25565957	0.65807476
0.0231 ns	0.015120852	0.018248727	0.026123534	0.046952528	0.104021783	0.25569155	0.658072743
0.0531 ns	0.020646234	0.022768059	0.028364572	0.048164072	0.103943513	0.25563381	0.658075934
0.1225 ns	0.033353279	0.035990372	0.04432612	0.060079641	0.107328596	0.255653935	0.658076051
0.2823 ns	0.051230429	0.057158601	0.070071531	0.095148455	0.138645568	0.263236617	0.658062254
0.6507 ns	0.081356404	0.090533722	0.11121380 5	0.151793747	0.220297907	0.334102399	0.670920277
1.5000 ns	0.135542841	0.148569987	0.178785548	0.240079689	0.350481942	0.528101031	0.822633485
fall_trans							
Transition Time \ Load Cap	0.5000 fF	1.3000 fF	3.5000 fF	9.4000 fF	24.9000 fF	66.2000 fF	175.8000 fF
0.0100 ns	0.007043263	0.008985241	0.013582836	0.025451594	0.059629596	0.15028238	0.39153758

0.0231 ns	0.007747207	0.008314748	0.013491291	0.026038321	0.059502143	0.15030008	0.391501531
0.0531 ns	0.013010902	0.01390255	0.017475965	0.02798014	0.059752245	0.150224495	0.391537731
0.1225 ns	0.019851213	0.020887692	0.026567085	0.03866545	0.066164197	0.150827651	0.391520437
0.2823 ns	0.034247029	0.037222006	0.044393493	0.060193434	0.091398313	0.164940192	0.39212997
0.6507 ns	0.066989633	0.070129692	0.079537277	0.100715287	0.14268393	0.224547313	0.421149608
1.5000 ns	0.131438712	0.135441378	0.147473599	0.177101509	0.236142936	0.346340515	0.557654707

NAND2_x4_pin A

cell_fall							
Transition Time \ Load Cap	0.5000 fF	1.3000 fF	3.5000 fF	9.4000 fF	24.9000 fF	66.2000 fF	175.8000 fF
0.0100 ns	0.009770705	0.010522493	0.012731864	0.018142268	0.031138115	0.06545643	0.156105379
0.0231 ns	0.012266413	0.013179426	0.016423264	0.022026208	0.035311622	0.069712922	0.16041068
0.0531 ns	0.014966996	0.016443466	0.021026321	0.029451133	0.045297531	0.079774957	0.170571229
0.1225 ns	0.015779095	0.018328032	0.024777532	0.037766253	0.06176731	0.103341584	0.194019352
0.2823 ns	0.011362381	0.015197093	0.024551105	0.044029477	0.080131714	0.142861086	0.248658443
0.6507 ns	0	0	0.011273172	0.040033133	0.093551202	0.187977931	0.346884233
1.5000 ns	0	0	0	0	0.083237734	0.223452097	0.462592602
cell_rise							
Transition	0.5000 fF	1.3000 fF	3.5000 fF	9.4000 fF	24.9000 fF	66.2000 fF	175.8000 fF

Time \ Load Cap							
0.0100 ns	0.011668278	0.012788413	0.016199804	0.024561561	0.044711767	0.096736281	0.232855341
0.0231 ns	0.017324084	0.018616465	0.021592202	0.029543032	0.049637129	0.101683168	0.237960643
0.0531 ns	0.024340504	0.026294375	0.031537418	0.041567615	0.061473709	0.113526915	0.250118462
0.1225 ns	0.034787698	0.03798093	0.045754844	0.061511664	0.089386101	0.141909241	0.278317547
0.2823 ns	0.052204143	0.056741432	0.067795615	0.091301228	0.134611743	0.207678458	0.344681263
0.6507 ns	0.085164576	0.091314275	0.106313551	0.138961977	0.20255863	0.315784957	0.499763881
1.5000 ns	0.15218491	0.160099321	0.179943788	0.224169594	0.312176436	0.478212088	0.763961994
rise_trans							
Transition Time \ Load Cap	0.5000 fF	1.3000 fF	3.5000 fF	9.4000 fF	24.9000 fF	66.2000 fF	175.8000 fF
0.0100 ns	0.007852985	0.009002552	0.013814545	0.023493961	0.051364151	0.125713557	0.323822775
0.0231 ns	0.010943468	0.011884083	0.014324081	0.023423499	0.051406221	0.125698659	0.323822368
0.0531 ns	0.018354344	0.020064952	0.021567604	0.028919781	0.052180866	0.125825554	0.323854047
0.1225 ns	0.027296761	0.028630831	0.034440868	0.045074736	0.064880988	0.127792058	0.323851475
0.2823 ns	0.042327556	0.045773778	0.05447256	0.072203189	0.102383794	0.155774991	0.326808159
0.6507 ns	0.073358484	0.077822082	0.089167018	0.114804453	0.163932506	0.244020111	0.385568717
1.5000 ns	0.141169501	0.145970503	0.159106561	0.191900466	0.261672397	0.39048815	0.591780978
fall_trans							
Transition Time \ Load Cap	0.5000 fF	1.3000 fF	3.5000 fF	9.4000 fF	24.9000 fF	66.2000 fF	175.8000 fF

0.0100 ns	0.005557629	0.006286885	0.009312503	0.015850316	0.032081307	0.076402568	0.194911387
0.0231 ns	0.009010819	0.009895939	0.011419646	0.016504302	0.031820015	0.076392026	0.194866887
0.0531 ns	0.012451413	0.014698405	0.016933627	0.022633263	0.035362176	0.076317037	0.194944943
0.1225 ns	0.019884462	0.022018997	0.025803578	0.033528307	0.049953999	0.084129002	0.194898548
0.2823 ns	0.033057259	0.035649151	0.041565788	0.053824245	0.077321476	0.119491373	0.210827584
0.6507 ns	0.061697538	0.065098106	0.073527673	0.09127636	0.1246056	0.185481115	0.292451351
1.5000 ns	0.125261172	0.129209571	0.139773189	0.164331054	0.211904396	0.298774281	0.452627279

NAND2_x4_pin B

cell_fall							
Transition Time \ Load Cap	0.5000 fF	1.3000 fF	3.5000 fF	9.4000 fF	24.9000 fF	66.2000 fF	175.8000 fF
0.0100 ns	0.013077688	0.013835499	0.01637444	0.021118854	0.03426064	0.068453952	0.15909083
0.0231 ns	0.017057266	0.017786091	0.019973245	0.02533457	0.038590631	0.072863359	0.163535472
0.0531 ns	0.020893976	0.022818469	0.025697719	0.032577397	0.047202428	0.081801813	0.172599855
0.1225 ns	0.024043884	0.026458865	0.030954781	0.04184272	0.06261571	0.102120478	0.193413751
0.2823 ns	0.021718483	0.025198581	0.033039074	0.049891724	0.081761173	0.13791957	0.240522741
0.6507 ns	0	0.007697095	0.020373845	0.047324296	0.096866153	0.18299044	0.327332829
1.5000 ns	0	0	0	0.013108733	0.088816427	0.220692198	0.440275028
cell_rise							
Transition Time \ Load Cap	0.5000 fF	1.3000 fF	3.5000 fF	9.4000 fF	24.9000 fF	66.2000 fF	175.8000 fF

0.0100 ns	0.019179931	0.020357589	0.023226686	0.031173364	0.050979477	0.102795532	0.238798718
0.0231 ns	0.024444757	0.025662413	0.028659291	0.036521831	0.056367094	0.108086595	0.244107648
0.0531 ns	0.035432819	0.036855052	0.041141919	0.048993254	0.068625546	0.120349042	0.256543154
0.1225 ns	0.0538869	0.055608677	0.061356407	0.073673388	0.097681409	0.149161075	0.285155301
0.2823 ns	0.08070998	0.083536497	0.091879529	0.110705544	0.148200517	0.216172775	0.35196684
0.6507 ns	0.125297218	0.129831678	0.141274059	0.167919846	0.224073061	0.329683184	0.508021514
1.5000 ns	0.208714438	0.214893509	0.230068351	0.266610613	0.344925721	0.500825478	0.777688481
rise_trans							
Transition Time \ Load Cap	0.5000 fF	1.3000 fF	3.5000 fF	9.4000 fF	24.9000 fF	66.2000 fF	175.8000 fF
0.0100 ns	0.014659973	0.016185431	0.019866658	0.029882081	0.057482369	0.13217696	0.330414151
0.0231 ns	0.014513219	0.015384736	0.019791457	0.029785406	0.057599903	0.132158669	0.330411
0.0531 ns	0.020030533	0.020987708	0.023673678	0.032727201	0.05761636	0.132200287	0.330413707
0.1225 ns	0.032171574	0.034137192	0.038687319	0.047608041	0.067986943	0.133605469	0.330415316
0.2823 ns	0.049801366	0.053132293	0.060752536	0.076356426	0.105089408	0.159118683	0.33292096
0.6507 ns	0.078536893	0.083586004	0.095292073	0.120794253	0.168200266	0.246530535	0.389441066
1.5000 ns	0.132319643	0.139127058	0.155996638	0.192919186	0.265425253	0.393809158	0.593947177
fall_trans							
Transition Time \ Load Cap	0.5000 fF	1.3000 fF	3.5000 fF	9.4000 fF	24.9000 fF	66.2000 fF	175.8000 fF
0.0100 ns	0.006392155	0.00720535	0.008586305	0.015076603	0.03205285	0.076217506	0.194948785

0.0231 ns	0.007987268	0.008053238	0.009101447	0.015250536	0.031937891	0.076190318	0.19494232
0.0531 ns	0.013324898	0.013581601	0.015118635	0.019516651	0.033878186	0.076421884	0.194912735
0.1225 ns	0.018587673	0.020202681	0.022248306	0.02965754	0.043813802	0.081140511	0.194894265
0.2823 ns	0.032829183	0.034232687	0.038486249	0.047658354	0.066745942	0.105877812	0.205101601
0.6507 ns	0.065080756	0.066725696	0.071152933	0.082746495	0.10862187	0.159855561	0.26230361
1.5000 ns	0.130651732	0.131888164	0.136913383	0.151653651	0.186756331	0.257594355	0.390768662

A.3 NOR2 Family

NOR2_x1_pinA

cell_fall							
Transition Time \ Load Cap	0.5000 fF	1.3000 fF	3.5000 fF	9.4000 fF	24.9000 fF	66.2000 fF	175.8000 fF
0.0100 ns	0.01738583	0.021768062	0.033692869	0.063303784	0.138765012	0.338321988	0.867259471
0.0231 ns	0.02081302	0.025440388	0.037655314	0.067719093	0.143478092	0.343223809	0.872241789
0.0531 ns	0.028118392	0.034588589	0.047810454	0.078085473	0.154479553	0.354634556	0.883847204
0.1225 ns	0.037524331	0.047307334	0.067330734	0.103374151	0.179879658	0.380569995	0.910134498
0.2823 ns	0.049187739	0.063612099	0.093741826	0.148605055	0.240172401	0.440658022	0.970557167
0.6507 ns	0.063467027	0.084495871	0.128347039	0.210166396	0.349710759	0.581787318	1.110666387
1.5000 ns	0.080740517	0.110577359	0.173529816	0.291956805	0.49997851	0.851976331	1.437787545
cell_rise							

Transition Time \ Load Cap	0.5000 fF	1.3000 fF	3.5000 fF	9.4000 fF	24.9000 fF	66.2000 fF	175.8000 fF
0.0100 ns	0.014334378	0.019424895	0.031214928	0.062171428	0.142565321	0.356196363	0.922834237
0.0231 ns	0.019071129	0.023456817	0.035416992	0.066499092	0.146988718	0.36067068	0.927338272
0.0531 ns	0.025168866	0.032281287	0.045918852	0.076890255	0.157509923	0.371326843	0.938062276
0.1225 ns	0.032302137	0.042926678	0.064162462	0.102021283	0.18220034	0.39597381	0.962766723
0.2823 ns	0.040027651	0.055237455	0.087056509	0.144674502	0.240715479	0.453370537	1.01979857
0.6507 ns	0.047167656	0.068451072	0.113623495	0.199058365	0.345124323	0.58870582	1.152547174
1.5000 ns	0.049718821	0.078776505	0.141578429	0.262768207	0.479623505	0.847542487	1.464308934
rise_trans							
Transition Time \ Load Cap	0.5000 fF	1.3000 fF	3.5000 fF	9.4000 fF	24.9000 fF	66.2000 fF	175.8000 fF
0.0100 ns	0.013588512	0.020068931	0.035979475	0.079298808	0.192072354	0.492929238	1.291291229
0.0231 ns	0.016598363	0.020499172	0.036289568	0.079208456	0.192119485	0.492945981	1.291279308
0.0531 ns	0.023999373	0.027902048	0.03959566	0.079215713	0.192096504	0.492919017	1.291292075
0.1225 ns	0.032679517	0.039397306	0.056014566	0.088168042	0.192225562	0.492934456	1.291290042
0.2823 ns	0.050370947	0.061362753	0.084191081	0.126050203	0.211366034	0.492926479	1.291291149
0.6507 ns	0.085121558	0.100108151	0.133337286	0.195097987	0.299070235	0.529907166	1.291289117
1.5000 ns	0.158025226	0.177248015	0.221931689	0.311406116	0.467223952	0.727805552	1.35613401
fall_trans							
Transition Time \ Load	0.5000 fF	1.3000 fF	3.5000 fF	9.4000 fF	24.9000 fF	66.2000 fF	175.8000 fF

Cap							
0.0100 ns	0.009211369	0.014747375	0.027920277	0.06464984	0.162042017	0.422238633	1.112910639
0.0231 ns	0.009049661	0.013927628	0.027685496	0.064534883	0.162087961	0.422259034	1.112904461
0.0531 ns	0.015865623	0.018972023	0.029880286	0.064626237	0.162034557	0.422233774	1.112910824
0.1225 ns	0.024613288	0.030854554	0.044075128	0.071317768	0.162035798	0.422253233	1.112909513
0.2823 ns	0.040268185	0.050585139	0.071061075	0.106729384	0.178811915	0.422266314	1.112897318
0.6507 ns	0.071924682	0.086237983	0.115963403	0.170877371	0.261780201	0.456250324	1.112910064
1.5000 ns	0.139349852	0.157754104	0.198613757	0.277376639	0.41595593	0.645169147	1.174561422

NOR2_x1_pin B

Transition Time \ Load Cap	0.5000 fF	1.3000 fF	3.5000 fF	9.4000 fF	24.9000 fF	66.2000 fF	175.8000 fF
0.0100 ns	0.029495191	0.034844594	0.04640937	0.07616529	0.151902456	0.351762368	0.880917789
0.0231 ns	0.034601013	0.038707614	0.050825118	0.080801216	0.156672851	0.356593589	0.885776935
0.0531 ns	0.045355795	0.049804731	0.061626702	0.091747363	0.167862559	0.367953357	0.89721544
0.1225 ns	0.065287225	0.072029035	0.086547112	0.117734646	0.193885527	0.394169191	0.923553508
0.2823 ns	0.093214909	0.102896204	0.125122725	0.170821887	0.254952164	0.454900188	0.984275448
0.6507 ns	0.130278202	0.144214736	0.17686749	0.245571798	0.372890585	0.596852364	1.124999346
1.5000 ns	0.178724265	0.198524499	0.245733495	0.345880553	0.536756079	0.874728114	1.452983581
cell_rise							
Transition Time \ Load Cap	0.5000 fF	1.3000 fF	3.5000 fF	9.4000 fF	24.9000 fF	66.2000 fF	175.8000 fF

0.0100 ns	0.023110223	0.02834912	0.039522007	0.070169181	0.150414985	0.363971052	0.930587907
0.0231 ns	0.029057202	0.032901775	0.044551144	0.075414815	0.155743254	0.369348801	0.935973008
0.0531 ns	0.038215825	0.043220048	0.055740816	0.086556153	0.166969551	0.380646934	0.947315434
0.1225 ns	0.04972911	0.057700455	0.074632886	0.109747431	0.190420764	0.404268532	0.971037196
0.2823 ns	0.060925338	0.074392145	0.101505682	0.150948261	0.24326598	0.457770178	1.024866474
0.6507 ns	0.069886775	0.09056553	0.133574628	0.211005551	0.340508469	0.579870549	1.148318439
1.5000 ns	0.079854539	0.109506294	0.171988573	0.288345142	0.485788749	0.815977078	1.430803506
rise_trans							
Transition Time \ Load Cap	0.5000 fF	1.3000 fF	3.5000 fF	9.4000 fF	24.9000 fF	66.2000 fF	175.8000 fF
0.0100 ns	0.014257961	0.020659062	0.03621693	0.079274733	0.192119387	0.49291688	1.291292307
0.0231 ns	0.015631733	0.020479014	0.03642894	0.079253472	0.192087703	0.492945747	1.291285324
0.0531 ns	0.018556131	0.023571757	0.037555252	0.079345111	0.192107436	0.492908877	1.291292469
0.1225 ns	0.029686185	0.034293377	0.047694442	0.083980042	0.192182143	0.492944086	1.29128405
0.2823 ns	0.051790872	0.057197082	0.072174482	0.108821933	0.203576274	0.492956775	1.29128713
0.6507 ns	0.095489319	0.102127875	0.120853852	0.164964367	0.261142019	0.515836683	1.291287561
1.5000 ns	0.169465941	0.177642659	0.20376067	0.266333453	0.389349076	0.644290792	1.332493715
fall_trans							
Transition Time \ Load Cap	0.5000 fF	1.3000 fF	3.5000 fF	9.4000 fF	24.9000 fF	66.2000 fF	175.8000 fF
0.0100 ns	0.020228476	0.024964424	0.03855413	0.075698894	0.173616955	0.434151937	1.125182971

0.0231 ns	0.019548176	0.025073207	0.038881908	0.075897853	0.173554101	0.434129403	1.125198238
0.0531 ns	0.020746033	0.025764001	0.038527321	0.075723229	0.173616246	0.434151834	1.125185226
0.1225 ns	0.032541958	0.037700646	0.048627446	0.079736381	0.173638915	0.434147018	1.125188411
0.2823 ns	0.051003899	0.059799189	0.077591884	0.111475473	0.187118254	0.43412303	1.125197307
0.6507 ns	0.083256476	0.096288511	0.124279616	0.176946639	0.266298571	0.465225267	1.125183969
1.5000 ns	0.139079701	0.159085788	0.20203407	0.283150225	0.421491507	0.649690692	1.184436118

NOR2_x2_pin A

cell_fall							
Transition Time \ Load Cap	0.5000 fF	1.3000 fF	3.5000 fF	9.4000 fF	24.9000 fF	66.2000 fF	175.8000 fF
0.0100 ns	0.014767056	0.017533417	0.023319223	0.038406764	0.075340285	0.171764949	0.426540583
0.0231 ns	0.018797008	0.021118465	0.027244959	0.042505373	0.079885862	0.176583899	0.431496679
0.0531 ns	0.025046649	0.028640529	0.036700973	0.052784083	0.09053391	0.187791918	0.443032531
0.1225 ns	0.032852211	0.038257362	0.050748173	0.074541715	0.11596755	0.213546976	0.469259933
0.2823 ns	0.041202725	0.049614355	0.06822177	0.104439966	0.167184945	0.274058433	0.529819945
0.6507 ns	0.049828953	0.061991961	0.089068335	0.142550736	0.237747112	0.398280206	0.671284771
1.5000 ns	0.057036372	0.073836637	0.112234534	0.18901233	0.328557956	0.572301638	0.973349131
cell_rise							
Transition Time \ Load Cap	0.5000 fF	1.3000 fF	3.5000 fF	9.4000 fF	24.9000 fF	66.2000 fF	175.8000 fF
0.0100 ns	0.012720582	0.01483507	0.021217399	0.036992592	0.0767655	0.18198635	0.460855574
0.0231 ns	0.01726136	0.01964731	0.02545218	0.04117240	0.08108366	0.18642586	0.46533409

	5	8		1	5	2	4
0.0531 ns	0.022528843	0.026183691	0.035058117	0.051566512	0.09149712	0.196976919	0.475995744
0.1225 ns	0.028235122	0.034370728	0.047538344	0.072713168	0.116466202	0.221600437	0.500599633
0.2823 ns	0.035096434	0.043672856	0.062921134	0.100663192	0.166211981	0.279759834	0.557757877
0.6507 ns	0.04219882	0.054008829	0.080858472	0.134858245	0.233037177	0.400453029	0.69224266
1.5000 ns	0.047254959	0.062947769	0.099675949	0.175033289	0.315508834	0.566457767	0.984902411
rise_trans							
Transition Time \ Load Cap	0.5000 fF	1.3000 fF	3.5000 fF	9.4000 fF	24.9000 fF	66.2000 fF	175.8000 fF
0.0100 ns	0.011828182	0.014664179	0.022824025	0.043623253	0.099241396	0.24697387	0.639196765
0.0231 ns	0.014736676	0.016903815	0.023174744	0.043886919	0.099319553	0.247025589	0.639192333
0.0531 ns	0.020924348	0.024309825	0.029226722	0.045944607	0.099169714	0.247029544	0.639207871
0.1225 ns	0.028551813	0.033789589	0.043405207	0.062221508	0.105109146	0.247050341	0.639206781
0.2823 ns	0.046434293	0.052742697	0.06690299	0.093638602	0.141952682	0.258404113	0.639205139
0.6507 ns	0.081791743	0.089892845	0.109209426	0.148804849	0.218867606	0.339601079	0.658679372
1.5000 ns	0.157556608	0.167085728	0.191667414	0.246192988	0.349931715	0.52777961	0.831619471
fall_trans							
Transition Time \ Load Cap	0.5000 fF	1.3000 fF	3.5000 fF	9.4000 fF	24.9000 fF	66.2000 fF	175.8000 fF
0.0100 ns	0.008280087	0.009549401	0.016167447	0.033819808	0.080226319	0.204649968	0.535257353
0.0231 ns	0.007847096	0.009449559	0.016237903	0.033835102	0.080147167	0.204589109	0.535226455
0.0531 ns	0.01377491	0.01644383	0.02048878	0.03505271	0.08022967	0.20464857	0.53525515

	2	5	1	6		5	6
0.1225 ns	0.021390898	0.025655267	0.033869054	0.049014809	0.084500674	0.204664008	0.535258926
0.2823 ns	0.036448323	0.042436624	0.055370213	0.078859888	0.118783644	0.214818446	0.535247657
0.6507 ns	0.067548564	0.07566296	0.093537459	0.129006491	0.190915446	0.292918971	0.554097149
1.5000 ns	0.137310105	0.146305305	0.169220875	0.217891324	0.309216056	0.466820411	0.722416042

NOR2_x2_pin B

cell_fall							
Transition Time \ Load Cap	0.5000 fF	1.3000 fF	3.5000 fF	9.4000 fF	24.9000 fF	66.2000 fF	175.8000 fF
0.0100 ns	0.02678799	0.028820203	0.03539073	0.050226082	0.087431753	0.184197191	0.439266141
0.0231 ns	0.030921262	0.033845174	0.039572496	0.05496541	0.092205549	0.189052448	0.444170644
0.0531 ns	0.042418127	0.044885442	0.050781424	0.06570771	0.10331417	0.200407991	0.455655163
0.1225 ns	0.061334014	0.064852779	0.073486799	0.091523099	0.12946351	0.22667015	0.482082947
0.2823 ns	0.086869722	0.092158858	0.104684197	0.132488333	0.186229295	0.287946969	0.543159426
0.6507 ns	0.118793295	0.126352793	0.145097105	0.186567732	0.26869505	0.41776566	0.685406372
1.5000 ns	0.157070942	0.16771984	0.194611056	0.254806549	0.376549522	0.60381783	0.992287771
cell_rise							
Transition Time \ Load Cap	0.5000 fF	1.3000 fF	3.5000 fF	9.4000 fF	24.9000 fF	66.2000 fF	175.8000 fF
0.0100 ns	0.022037692	0.024107915	0.0297982	0.04486337	0.084476651	0.18962442	0.468437487
0.0231 ns	0.026364062	0.029378431	0.03476067	0.050170415	0.0898147	0.194997537	0.473845667
0.0531 ns	0.03666305	0.03879021	0.04562916	0.06147981	0.10116059	0.20647323	0.48538538

	3	3	6	4		8	8
0.1225 ns	0.047453497	0.051362401	0.061632127	0.082607911	0.125142483	0.230649293	0.509714689
0.2823 ns	0.05767343	0.065534114	0.082533275	0.114975384	0.172649045	0.285365949	0.564960772
0.6507 ns	0.06774303	0.079464337	0.1060693	0.157644965	0.246403333	0.397778972	0.691314076
1.5000 ns	0.081914554	0.098859899	0.137145703	0.21301845	0.348217227	0.576322568	0.960379121
rise_trans							
Transition Time \ Load Cap	0.5000 fF	1.3000 fF	3.5000 fF	9.4000 fF	24.9000 fF	66.2000 fF	175.8000 fF
0.0100 ns	0.012400032	0.015728643	0.023119608	0.043998204	0.099320888	0.247028142	0.639193121
0.0231 ns	0.012196962	0.016080782	0.023361905	0.043891798	0.099295048	0.246996857	0.639191079
0.0531 ns	0.017024433	0.018754607	0.025509609	0.044606192	0.099214663	0.247039378	0.639209241
0.1225 ns	0.02722491	0.029924341	0.03624959	0.053752463	0.102393814	0.247042759	0.639202889
0.2823 ns	0.049282567	0.052330135	0.059882652	0.079004474	0.12455811	0.253657706	0.639209578
0.6507 ns	0.092972003	0.095830779	0.104992877	0.129379221	0.183026331	0.303936425	0.650958167
1.5000 ns	0.166544299	0.169720211	0.181654321	0.21659272	0.292208504	0.439646349	0.757971535
fall_trans							
Transition Time \ Load Cap	0.5000 fF	1.3000 fF	3.5000 fF	9.4000 fF	24.9000 fF	66.2000 fF	175.8000 fF
0.0100 ns	0.016442565	0.020000898	0.026495617	0.043985466	0.090625335	0.215389928	0.546365921
0.0231 ns	0.017439765	0.0194618	0.026238777	0.043847465	0.090704062	0.215445353	0.546390702
0.0531 ns	0.017660766	0.02046081	0.027564187	0.044049516	0.090627248	0.215397575	0.546370827
0.1225 ns	0.02928617	0.03262696	0.03947327	0.05311225	0.09317622	0.21537309	0.54636337

	6	6	4	2	7	8	7
0.2823 ns	0.047413629	0.051812277	0.062680142	0.084009546	0.12252715	0.223584685	0.546382876
0.6507 ns	0.077407352	0.08469344	0.101641223	0.135542518	0.195479618	0.296564684	0.563488364
1.5000 ns	0.130655108	0.141853648	0.16796772	0.220352314	0.314171379	0.471156788	0.726727221

NOR2_x4_pin A

cell_fall							
Transition Time \ Load Cap	0.5000 fF	1.3000 fF	3.5000 fF	9.4000 fF	24.9000 fF	66.2000 fF	175.8000 fF
0.0100 ns	0.013341429	0.014390501	0.017363191	0.024948801	0.042902983	0.088468733	0.207762564
0.0231 ns	0.017112016	0.018321388	0.021310578	0.028830326	0.047089341	0.092996884	0.212509777
0.0531 ns	0.022536052	0.024170971	0.028673438	0.038378159	0.057245115	0.103643551	0.223597296
0.1225 ns	0.02771451	0.03075917	0.037854885	0.052874295	0.079817131	0.128662021	0.248999763
0.2823 ns	0.032984095	0.037387409	0.047944796	0.070202324	0.111417126	0.182666042	0.30831175
0.6507 ns	0.035750397	0.04212393	0.057290815	0.089439176	0.150259744	0.25856474	0.438757822
1.5000 ns	0.031884818	0.040406666	0.061409676	0.106942401	0.194265387	0.353346188	0.627418099
cell_rise							
Transition Time \ Load Cap	0.5000 fF	1.3000 fF	3.5000 fF	9.4000 fF	24.9000 fF	66.2000 fF	175.8000 fF
0.0100 ns	0.011377533	0.012784397	0.016307888	0.024293391	0.043892569	0.095543311	0.231813317
0.0231 ns	0.015945096	0.017367424	0.020425357	0.028232458	0.048012912	0.099737129	0.236085629
0.0531 ns	0.020419373	0.022858376	0.027597556	0.038168355	0.058337404	0.110103708	0.246615696
0.1225 ns	0.02593778	0.02912116	0.03682673	0.05282362	0.08160085	0.13492191	0.27111967

	6	1	9	6	9	7	6
0.2823 ns	0.03289143	0.037385555	0.048238739	0.071303595	0.114628035	0.190076601	0.328828752
0.6507 ns	0.041711069	0.047790794	0.062700074	0.094762448	0.15695604	0.270093598	0.46058859
1.5000 ns	0.053133287	0.060930625	0.080569919	0.124390374	0.210926743	0.373337993	0.659542068
rise_trans							
Transition Time \ Load Cap	0.5000 fF	1.3000 fF	3.5000 fF	9.4000 fF	24.9000 fF	66.2000 fF	175.8000 fF
0.0100 ns	0.010517378	0.011749084	0.016121805	0.026367302	0.053295418	0.125113959	0.316065512
0.0231 ns	0.014087843	0.014818797	0.017663865	0.025745642	0.053314041	0.12513325	0.31605087
0.0531 ns	0.018475693	0.021359253	0.024971389	0.03213152	0.054403473	0.125126009	0.316108023
0.1225 ns	0.027660749	0.028786822	0.034760526	0.047010389	0.068662312	0.12809757	0.316088579
0.2823 ns	0.044124291	0.047035636	0.055317969	0.072240662	0.103355729	0.159978725	0.321259884
0.6507 ns	0.07926337	0.083130147	0.093509929	0.117049752	0.163163283	0.244222389	0.388891777
1.5000 ns	0.157081645	0.161265214	0.173309745	0.203200867	0.266811678	0.387462463	0.590978004
fall_trans							
Transition Time \ Load Cap	0.5000 fF	1.3000 fF	3.5000 fF	9.4000 fF	24.9000 fF	66.2000 fF	175.8000 fF
0.0100 ns	0.005555447	0.007643369	0.01091704	0.01875589	0.039950871	0.097432449	0.251193315
0.0231 ns	0.007927244	0.008285421	0.010075433	0.018889859	0.039960765	0.097433922	0.251189741
0.0531 ns	0.013474427	0.013714471	0.017202402	0.022408408	0.040635981	0.097577819	0.251224956
0.1225 ns	0.020857202	0.022113164	0.026708966	0.036405963	0.053416321	0.100372647	0.251231892
0.2823 ns	0.0340029	0.03735783	0.04438394	0.05945377	0.08620237	0.13147066	0.25705587

		3	2	8		9	9
0.6507 ns	0.065033144	0.06895858	0.078662397	0.099686184	0.139900198	0.21001705	0.32588242
1.5000 ns	0.137116744	0.140913027	0.151897116	0.17880411	0.234083849	0.33809459	0.514667329

NOR2_x4_pin B

cell_fall							
Transition Time \ Load Cap	0.5000 fF	1.3000 fF	3.5000 fF	9.4000 fF	24.9000 fF	66.2000 fF	175.8000 fF
0.0100 ns	0.023846792	0.024808673	0.028483103	0.03566588	0.05386261	0.099742911	0.219347224
0.0231 ns	0.028626553	0.029509306	0.032706332	0.04009678	0.058408574	0.104441097	0.224113371
0.0531 ns	0.038731066	0.040761484	0.043772991	0.051107351	0.069269704	0.11539245	0.235280463
0.1225 ns	0.055879266	0.057470935	0.062986547	0.073290675	0.094700384	0.141065077	0.261069608
0.2823 ns	0.078175652	0.080927737	0.087380137	0.103069911	0.135899271	0.19889024	0.321061224
0.6507 ns	0.103413424	0.106672877	0.116501517	0.139674178	0.188881915	0.284962937	0.455053352
1.5000 ns	0.128037751	0.133646659	0.147416006	0.180481154	0.251856186	0.39452492	0.653904727
cell_rise							
Transition Time \ Load Cap	0.5000 fF	1.3000 fF	3.5000 fF	9.4000 fF	24.9000 fF	66.2000 fF	175.8000 fF
0.0100 ns	0.019902105	0.021749875	0.024432183	0.032133085	0.051493543	0.102930535	0.239139656
0.0231 ns	0.025236527	0.026311279	0.02997676	0.03746808	0.056765745	0.1082753	0.244491917
0.0531 ns	0.035451164	0.036597383	0.039578784	0.048287142	0.06802859	0.119630276	0.255991155
0.1225 ns	0.0450054	0.047597857	0.052916839	0.065720197	0.090644878	0.143782519	0.280296135
0.2823 ns	0.055083578	0.05872232	0.068719811	0.089472528	0.127077006	0.195281975	0.335491024

0.6507 ns	0.066567059	0.072429815	0.087757537	0.119557213	0.178700792	0.280348279	0.456883269
1.5000 ns	0.086828779	0.095555936	0.117152144	0.163050691	0.250080498	0.404903668	0.663047467
rise_trans							
Transition Time \ Load Cap	0.5000 fF	1.3000 fF	3.5000 fF	9.4000 fF	24.9000 fF	66.2000 fF	175.8000 fF
0.0100 ns	0.010387876	0.012557713	0.016388023	0.026266111	0.053112052	0.125060119	0.316104031
0.0231 ns	0.011592896	0.012222432	0.01703429	0.026237771	0.053292351	0.125161722	0.316062553
0.0531 ns	0.016571328	0.017175843	0.019530656	0.028974335	0.053358377	0.125106836	0.316107802
0.1225 ns	0.026224567	0.027354458	0.030632626	0.039625917	0.061178627	0.126708832	0.31607681
0.2823 ns	0.048516203	0.049352371	0.053099249	0.062908152	0.086846819	0.144936208	0.319111568
0.6507 ns	0.090864743	0.092154172	0.09608095	0.108527158	0.138854781	0.204904551	0.35907386
1.5000 ns	0.162767481	0.163762125	0.168494997	0.185078142	0.228739671	0.319849112	0.497307994
fall_trans							
Transition Time \ Load Cap	0.5000 fF	1.3000 fF	3.5000 fF	9.4000 fF	24.9000 fF	66.2000 fF	175.8000 fF
0.0100 ns	0.014343542	0.016581658	0.019470442	0.027535792	0.049403153	0.107273661	0.261203949
0.0231 ns	0.013752313	0.016221386	0.019534231	0.027510792	0.049335324	0.107287267	0.261206476
0.0531 ns	0.016608057	0.017536528	0.02015683	0.029274752	0.049454548	0.107177955	0.261154234
0.1225 ns	0.028083709	0.029839672	0.032712816	0.041437909	0.057884849	0.108825351	0.261187316
0.2823 ns	0.044418657	0.047143408	0.052957604	0.065613403	0.090379798	0.135475878	0.265821406
0.6507 ns	0.072507411	0.076508261	0.085690452	0.106269962	0.145379793	0.213883509	0.330245997

1.5000 ns	0.123444371	0.129391398	0.143827662	0.175338418	0.235473071	0.342345517	0.518441814

A.4 MIN3 Family

MIN3_x1_pin A

cell_fall							
Transition Time \ Load Cap	0.5000 fF	1.3000 fF	3.5000 fF	9.4000 fF	24.9000 fF	66.2000 fF	175.8000 fF
0.0100 ns	0.052692479	0.056559236	0.06587194	0.089410946	0.148570458	0.303075133	0.710775302
0.0231 ns	0.055147175	0.058936137	0.068631038	0.09280578	0.152629939	0.307542975	0.715406283
0.0531 ns	0.062892942	0.066491247	0.076516481	0.101413612	0.162119308	0.317772671	0.726038406
0.1225 ns	0.083111619	0.08738065	0.098232202	0.123085692	0.184463969	0.341210616	0.750230475
0.2823 ns	0.11230285	0.118868435	0.134469553	0.169766102	0.239042636	0.396066974	0.805994426
0.6507 ns	0.147221972	0.156582624	0.179908426	0.232130237	0.335707352	0.526385329	0.935970248
1.5000 ns	0.182501439	0.196095564	0.229841577	0.306225342	0.459842204	0.745916056	1.241786522
cell_rise							
Transition Time \ Load Cap	0.5000 fF	1.3000 fF	3.5000 fF	9.4000 fF	24.9000 fF	66.2000 fF	175.8000 fF
0.0100 ns	0.051124034	0.057593222	0.071260542	0.105605615	0.191583947	0.417146137	1.013630211
0.0231 ns	0.054112512	0.060513959	0.074285342	0.109562194	0.196030309	0.421822333	1.018426924
0.0531 ns	0.065180713	0.069711636	0.083895742	0.118616121	0.206036741	0.432722802	1.02979469
0.1225 ns	0.086761684	0.092711612	0.107790782	0.142422324	0.229840026	0.457495336	1.055406618
0.2823 ns	0.10899174	0.11995094	0.14512506	0.19445115	0.28694508	0.51492115	1.11391229

		3	7	4	1	1	7
0.6507 ns	0.135591266	0.151296239	0.188581848	0.265364116	0.403398533	0.650051519	1.24953578
1.5000 ns	0.181500406	0.203323584	0.254880221	0.362949412	0.566984371	0.926696474	1.565467554
rise_trans							
Transition Time \ Load Cap	0.5000 fF	1.3000 fF	3.5000 fF	9.4000 fF	24.9000 fF	66.2000 fF	175.8000 fF
0.0100 ns	0.044994014	0.050655616	0.066853203	0.110423635	0.225190736	0.530833842	1.341496911
0.0231 ns	0.044931127	0.050559976	0.066691898	0.110321021	0.225165929	0.53077335	1.341475836
0.0531 ns	0.044653572	0.050531833	0.066501038	0.11018119	0.225084566	0.530782465	1.341430563
0.1225 ns	0.054294689	0.058069258	0.070722432	0.110739765	0.225137486	0.530770315	1.341427198
0.2823 ns	0.081992325	0.088188864	0.104146389	0.136581258	0.231664913	0.530769202	1.341423551
0.6507 ns	0.12575733	0.133606454	0.154460793	0.202991501	0.301740358	0.549897472	1.341417561
1.5000 ns	0.204058411	0.21346525	0.240303472	0.307137738	0.444998527	0.707629302	1.379239974
fall_trans							
Transition Time \ Load Cap	0.5000 fF	1.3000 fF	3.5000 fF	9.4000 fF	24.9000 fF	66.2000 fF	175.8000 fF
0.0100 ns	0.032948544	0.036764009	0.047512587	0.076247711	0.151964002	0.353989285	0.889884685
0.0231 ns	0.032761171	0.036803002	0.047348974	0.07611775	0.151899248	0.353946916	0.889892039
0.0531 ns	0.032019234	0.036465633	0.047223957	0.075986808	0.151860249	0.353969885	0.889871357
0.1225 ns	0.039077316	0.042403341	0.051575413	0.077466738	0.151705535	0.35388643	0.889863781
0.2823 ns	0.05631602	0.061799062	0.075466005	0.104317868	0.165127106	0.353843366	0.889798128
0.6507 ns	0.08872919	0.09699906	0.11712511	0.16028365	0.23887929	0.39614340	0.89014842

	3	5	9	3	6	2	6
1.5000 ns	0.148296838	0.161296418	0.192039476	0.255647964	0.373395457	0.577117981	0.987281072

MIN3_x1_pin B

cell_fall							
Transition Time \ Load Cap	0.5000 fF	1.3000 fF	3.5000 fF	9.4000 fF	24.9000 fF	66.2000 fF	175.8000 fF
0.0100 ns	0.059097476	0.063543534	0.074101541	0.099721715	0.161572548	0.318462749	0.727706996
0.0231 ns	0.062249032	0.066559409	0.077304916	0.103315157	0.165341758	0.322367828	0.7316784
0.0531 ns	0.070425657	0.074518674	0.085571524	0.112046584	0.174672491	0.332161059	0.741707964
0.1225 ns	0.093470026	0.09737178	0.107994737	0.134049543	0.197330644	0.355614804	0.765690046
0.2823 ns	0.132492903	0.138577163	0.153155982	0.186027484	0.252306649	0.410836925	0.821591926
0.6507 ns	0.182952332	0.191272558	0.212571588	0.260571756	0.358130983	0.542049879	0.952005215
1.5000 ns	0.240244108	0.25231781	0.282713614	0.352508094	0.496751506	0.772068561	1.258496017
cell_rise							
Transition Time \ Load Cap	0.5000 fF	1.3000 fF	3.5000 fF	9.4000 fF	24.9000 fF	66.2000 fF	175.8000 fF
0.0100 ns	0.058922267	0.063032533	0.076506151	0.109565726	0.194608408	0.41964678	1.015892506
0.0231 ns	0.062903249	0.068428234	0.081186821	0.114513386	0.199918212	0.42509785	1.02142006
0.0531 ns	0.074640206	0.07862519	0.091886945	0.12531642	0.211071672	0.436667214	1.033191843
0.1225 ns	0.096824344	0.101589222	0.114885382	0.148224622	0.23405241	0.460098196	1.056996221
0.2823 ns	0.124578524	0.133172133	0.15333474	0.196270556	0.285390931	0.511370046	1.108695625

0.6507 ns	0.15145323	0.164862184	0.19590638	0.260279211	0.384747449	0.627779525	1.224890322
1.5000 ns	0.180615661	0.200673085	0.247549965	0.343692445	0.521818164	0.85555914	1.494096265
rise_trans							
Transition Time \ Load Cap	0.5000 fF	1.3000 fF	3.5000 fF	9.4000 fF	24.9000 fF	66.2000 fF	175.8000 fF
0.0100 ns	0.044578707	0.05053071	0.066509823	0.110299374	0.225165036	0.530788362	1.34148451
0.0231 ns	0.044850958	0.050440815	0.066647467	0.110214504	0.22508962	0.53079082	1.341469911
0.0531 ns	0.04499001	0.050810032	0.066627262	0.11030275	0.225144421	0.530750598	1.341436453
0.1225 ns	0.049402122	0.054359332	0.068672553	0.110694301	0.225086299	0.530774985	1.341420532
0.2823 ns	0.071176187	0.076678607	0.091923699	0.128308392	0.230092369	0.530771474	1.341422303
0.6507 ns	0.113175967	0.118926542	0.135805373	0.180736905	0.286726501	0.549255133	1.341422955
1.5000 ns	0.20622129	0.21171071	0.229371128	0.280045125	0.40325101	0.682936233	1.383414784
fall_trans							
Transition Time \ Load Cap	0.5000 fF	1.3000 fF	3.5000 fF	9.4000 fF	24.9000 fF	66.2000 fF	175.8000 fF
0.0100 ns	0.040160132	0.043829798	0.05574638	0.085195513	0.161029688	0.362705842	0.898458225
0.0231 ns	0.040087143	0.044182507	0.055551625	0.085050187	0.160964832	0.36272989	0.898442105
0.0531 ns	0.039069319	0.043951846	0.055320461	0.085130399	0.161065498	0.36268621	0.89846177
0.1225 ns	0.04205017	0.04592325	0.056941912	0.085024718	0.160813458	0.362729575	0.898450548
0.2823 ns	0.064094733	0.069247761	0.081576941	0.108020639	0.170868109	0.362659379	0.898461063
0.6507 ns	0.101996134	0.110104227	0.128621507	0.167427062	0.242126472	0.400691292	0.898756216

1.5000 ns	0.167892883	0.179666899	0.208107271	0.267627507	0.379168108	0.579018368	0.991747841

MIN3_x1_pin C

cell_fall							
Transition Time \ Load Cap	0.5000 fF	1.3000 fF	3.5000 fF	9.4000 fF	24.9000 fF	66.2000 fF	175.8000 fF
0.0100 ns	0.061220594	0.065458838	0.07601177	0.101710594	0.16349753	0.320334425	0.729556115
0.0231 ns	0.064446598	0.068384461	0.079062925	0.10494743	0.166770943	0.323682115	0.73292631
0.0531 ns	0.071488965	0.075601334	0.086523942	0.112660947	0.174870031	0.332006465	0.741359055
0.1225 ns	0.090280988	0.094797008	0.105787277	0.13198289	0.194926186	0.352718184	0.762445064
0.2823 ns	0.126336517	0.131897065	0.145236015	0.176001383	0.242571402	0.401578319	0.812215846
0.6507 ns	0.177360059	0.185141904	0.204344986	0.247526422	0.335633881	0.514025206	0.927295336
1.5000 ns	0.238019266	0.249097462	0.27720624	0.341229571	0.472045083	0.720066119	1.189999174
cell_rise							
Transition Time \ Load Cap	0.5000 fF	1.3000 fF	3.5000 fF	9.4000 fF	24.9000 fF	66.2000 fF	175.8000 fF
0.0100 ns	0.064494399	0.069084106	0.081342923	0.112931373	0.194193003	0.409452424	0.979918338
0.0231 ns	0.070043731	0.074770518	0.087098578	0.118743807	0.200082171	0.415376495	0.98586233
0.0531 ns	0.082869386	0.087329227	0.099775738	0.131544438	0.213047294	0.428468765	0.999013059
0.1225 ns	0.107771406	0.112885012	0.125811221	0.15780597	0.239364224	0.454927941	1.025577157
0.2823 ns	0.140770917	0.147863463	0.165776969	0.206560367	0.293102153	0.508814464	1.07965363
0.6507 ns	0.17771784	0.189065985	0.216677566	0.275889863	0.392908735	0.627839758	1.199561426

1.5000 ns	0.219908875	0.236893221	0.278240324	0.36747506	0.538592764	0.85687131	1.472675864
rise_trans							
Transition Time \ Load Cap	0.5000 fF	1.3000 fF	3.5000 fF	9.4000 fF	24.9000 fF	66.2000 fF	175.8000 fF
0.0100 ns	0.039287276	0.044802713	0.060688486	0.103319609	0.216263873	0.516541854	1.312568109
0.0231 ns	0.038847549	0.044911505	0.060602746	0.103459597	0.216207313	0.516521595	1.312551638
0.0531 ns	0.039479222	0.045074355	0.060850586	0.103432642	0.216245792	0.516484368	1.312522688
0.1225 ns	0.044883392	0.04979784	0.064098182	0.104395187	0.216324347	0.516497057	1.312513201
0.2823 ns	0.066634209	0.072164574	0.087232411	0.123462773	0.223797492	0.516515382	1.312510475
0.6507 ns	0.111308097	0.117924164	0.135269089	0.178361925	0.277425695	0.537062148	1.312505929
1.5000 ns	0.199190351	0.206917821	0.228063467	0.281039434	0.400617787	0.663959634	1.354751725
fall_trans							
Transition Time \ Load Cap	0.5000 fF	1.3000 fF	3.5000 fF	9.4000 fF	24.9000 fF	66.2000 fF	175.8000 fF
0.0100 ns	0.040123851	0.044178788	0.055623378	0.085116381	0.160961061	0.362726116	0.89844855
0.0231 ns	0.039793292	0.044332901	0.055312148	0.085056545	0.161028532	0.362728013	0.89845097
0.0531 ns	0.039089806	0.044080952	0.05556639	0.08520485	0.161075215	0.362689433	0.898461766
0.1225 ns	0.041362347	0.045614554	0.056773931	0.085586796	0.161018203	0.362714232	0.898453983
0.2823 ns	0.057064836	0.061825729	0.072932297	0.09968667	0.167814252	0.363002424	0.89846173
0.6507 ns	0.090670941	0.096653433	0.111444073	0.144696267	0.215369398	0.38761089	0.89934102
1.5000 ns	0.149998804	0.159296666	0.181583632	0.229834049	0.324232208	0.510983789	0.959247608

MIN3_x2_pin A

cell_fall							
Transition Time \ Load Cap	0.5000 fF	1.3000 fF	3.5000 fF	9.4000 fF	24.9000 fF	66.2000 fF	175.8000 fF
0.0100 ns	0.046567651	0.048119477	0.052680172	0.063904109	0.091551099	0.16253648	0.348171085
0.0231 ns	0.048978729	0.050595293	0.0552436	0.066927613	0.095208805	0.166721757	0.35261834
0.0531 ns	0.056555945	0.058248193	0.063198752	0.075034772	0.103985544	0.176312114	0.362803602
0.1225 ns	0.075525644	0.077441314	0.08327356	0.096512583	0.125655095	0.198715554	0.386109918
0.2823 ns	0.100306736	0.10314774	0.1115694	0.131070359	0.172139692	0.25258167	0.440349094
0.6507 ns	0.12629106	0.131109509	0.143286947	0.171949439	0.233238561	0.353050722	0.568656656
1.5000 ns	0.144269448	0.150825442	0.168474948	0.210482673	0.300644291	0.479316745	0.80221208
cell_rise							
Transition Time \ Load Cap	0.5000 fF	1.3000 fF	3.5000 fF	9.4000 fF	24.9000 fF	66.2000 fF	175.8000 fF
0.0100 ns	0.047758137	0.050234064	0.058304289	0.07606493	0.119179181	0.230120991	0.521240613
0.0231 ns	0.051471803	0.053684146	0.061416245	0.079543107	0.123341557	0.234747257	0.526083975
0.0531 ns	0.062245265	0.064890967	0.071468533	0.08877851	0.132902118	0.245211894	0.537359724
0.1225 ns	0.083597208	0.087370694	0.095653298	0.113811467	0.157156624	0.269805472	0.562960605
0.2823 ns	0.106998323	0.112768271	0.126759389	0.157080848	0.214206591	0.328417431	0.62207856
0.6507 ns	0.13739477	0.145580404	0.166048143	0.211655984	0.300952269	0.459833451	0.760737993
1.5000 ns	0.194238208	0.205629258	0.233998131	0.297404816	0.424471991	0.661964755	1.07204898

rise_trans							
Transition Time \ Load Cap	0.5000 fF	1.3000 fF	3.5000 fF	9.4000 fF	24.9000 fF	66.2000 fF	175.8000 fF
0.0100 ns	0.041317636	0.044118825	0.051832061	0.072880428	0.128523223	0.277042259	0.670913492
0.0231 ns	0.041090693	0.043928126	0.0516298	0.072697211	0.128401931	0.277013335	0.670879522
0.0531 ns	0.041201725	0.043832015	0.051473185	0.072588767	0.128434962	0.277010625	0.670882816
0.1225 ns	0.051477315	0.053031213	0.058410498	0.075830679	0.128473091	0.277016596	0.670876664
0.2823 ns	0.076889433	0.080120386	0.088140733	0.108353896	0.148750007	0.279465363	0.670848696
0.6507 ns	0.119024354	0.123002263	0.133556313	0.160187482	0.218443012	0.335719041	0.678053649
1.5000 ns	0.194918057	0.199327495	0.212279575	0.247407419	0.328562442	0.49176928	0.804294066
fall_trans							
Transition Time \ Load Cap	0.5000 fF	1.3000 fF	3.5000 fF	9.4000 fF	24.9000 fF	66.2000 fF	175.8000 fF
0.0100 ns	0.028064682	0.030248595	0.034765826	0.047949713	0.081854325	0.17283806	0.414603963
0.0231 ns	0.027967955	0.030044124	0.034763416	0.047883314	0.08192033	0.172910753	0.414590288
0.0531 ns	0.027675505	0.029675081	0.034507669	0.047463345	0.081825163	0.172865941	0.414568443
0.1225 ns	0.035574342	0.037506536	0.041988362	0.052855206	0.083074296	0.17271218	0.41452633
0.2823 ns	0.051338699	0.054445717	0.061768974	0.07802628	0.110681834	0.184160952	0.414349136
0.6507 ns	0.081715369	0.086337822	0.097381598	0.121899133	0.170726063	0.259485765	0.44822915
1.5000 ns	0.138085666	0.144862837	0.161715014	0.198950562	0.271928087	0.404772685	0.63132247

MIN3_x2_pin B

cell_fall							

Transition Time \ Load Cap	0.5000 fF	1.3000 fF	3.5000 fF	9.4000 fF	24.9000 fF	66.2000 fF	175.8000 fF
0.0100 ns	0.051344069	0.053433789	0.058384258	0.07117191	0.1010866	0.174580222	0.36218454
0.0231 ns	0.054626919	0.056517407	0.061661458	0.074652688	0.104756483	0.178389748	0.366106697
0.0531 ns	0.06251876	0.064448265	0.070015058	0.082964874	0.113591457	0.187811432	0.37586819
0.1225 ns	0.085115501	0.087041616	0.092814131	0.10541173	0.135617155	0.210405648	0.399139479
0.2823 ns	0.119588132	0.122285312	0.130176553	0.148188932	0.18678449	0.264614548	0.453656968
0.6507 ns	0.160168939	0.164475995	0.175423873	0.201826647	0.258647495	0.372418921	0.582360129
1.5000 ns	0.199558215	0.205745613	0.221272005	0.259130155	0.342213733	0.51128598	0.824215218
cell_rise							
Transition Time \ Load Cap	0.5000 fF	1.3000 fF	3.5000 fF	9.4000 fF	24.9000 fF	66.2000 fF	175.8000 fF
0.0100 ns	0.055280492	0.057236216	0.064065442	0.080439851	0.12260694	0.232686467	0.523349581
0.0231 ns	0.060173283	0.062083622	0.068918415	0.085419637	0.127839965	0.238165418	0.528972933
0.0531 ns	0.071185267	0.073898119	0.079479706	0.0963572	0.138805772	0.249647468	0.540837178
0.1225 ns	0.093575873	0.096822312	0.103195231	0.12031633	0.162442309	0.273340821	0.564978742
0.2823 ns	0.122653947	0.126990215	0.138094148	0.162965878	0.214192121	0.32612933	0.61784325
0.6507 ns	0.153363805	0.160351942	0.177606487	0.215579866	0.291336657	0.438726876	0.737784194
1.5000 ns	0.193440385	0.203892685	0.229932298	0.287253614	0.399451622	0.608143087	0.999102712
rise_trans							

Transition Time \ Load Cap	0.5000 fF	1.3000 fF	3.5000 fF	9.4000 fF	24.9000 fF	66.2000 fF	175.8000 fF
0.0100 ns	0.041100534	0.043681635	0.05150947	0.072502807	0.128419555	0.277032301	0.670899415
0.0231 ns	0.041164625	0.043748203	0.05154819	0.07252047	0.128437475	0.277028349	0.670893985
0.0531 ns	0.041393163	0.044148767	0.0517945	0.07273481	0.128359235	0.276993442	0.670857147
0.1225 ns	0.046055038	0.0483364	0.05510546	0.074214056	0.128664481	0.276999131	0.670874632
0.2823 ns	0.066611895	0.069339595	0.0766546	0.096910491	0.142685027	0.279122572	0.67087361
0.6507 ns	0.107491168	0.110002943	0.118028029	0.14039729	0.196806748	0.325808144	0.679105344
1.5000 ns	0.19806239	0.200531529	0.208221015	0.232397338	0.296854107	0.450452028	0.791032454
fall_trans							
Transition Time \ Load Cap	0.5000 fF	1.3000 fF	3.5000 fF	9.4000 fF	24.9000 fF	66.2000 fF	175.8000 fF
0.0100 ns	0.03451782	0.036288155	0.041820815	0.055381211	0.089811336	0.1808062	0.422124051
0.0231 ns	0.034487836	0.03610923	0.041694054	0.055355554	0.089941088	0.180848379	0.422092111
0.0531 ns	0.033022373	0.035311506	0.040636351	0.05478914	0.089856872	0.180784	0.422131584
0.1225 ns	0.038946335	0.040220967	0.044772592	0.057177365	0.089922266	0.180764618	0.422088665
0.2823 ns	0.058887218	0.061925133	0.068568405	0.083103471	0.113765396	0.189619735	0.422090869
0.6507 ns	0.095127049	0.099085072	0.109018145	0.131578918	0.176458823	0.261695789	0.452851378
1.5000 ns	0.156845614	0.163009225	0.178240618	0.212741566	0.281497572	0.408679882	0.632413884

MIN3_x2_pin C

cell_fall							
Transition Time \ Load Cap	0.5000 fF	1.3000 fF	3.5000 fF	9.4000 fF	24.9000 fF	66.2000 fF	175.8000 fF
0.0100 ns	0.053499252	0.055301067	0.06050011	0.073151099	0.103023129	0.17643967	0.364018967
0.0231 ns	0.056610015	0.058440398	0.063786774	0.076422293	0.10639887	0.17991086	0.367531874
0.0531 ns	0.06365817	0.06564795	0.071107235	0.08393811	0.114268532	0.188103509	0.375882676
0.1225 ns	0.08282887	0.084818498	0.090098445	0.103433212	0.133872919	0.208406453	0.396739429
0.2823 ns	0.115251673	0.118153422	0.125035784	0.141774586	0.17790110 2	0.256100326	0.445660908
0.6507 ns	0.1578818	0.161982406	0.172036522	0.195889628	0.247500267	0.351251561	0.55822474
1.5000 ns	0.201430558	0.207122614	0.22167356	0.256969346	0.333802075	0.488299401	0.773414981
cell_rise							
Transition Time \ Load Cap	0.5000 fF	1.3000 fF	3.5000 fF	9.4000 fF	24.9000 fF	66.2000 fF	175.8000 fF
0.0100 ns	0.060852211	0.063173635	0.069240477	0.085013395	0.125042603	0.230124512	0.507948723
0.0231 ns	0.066777886	0.06896569	0.075167167	0.090954559	0.13108198	0.236250039	0.514110429
0.0531 ns	0.07956659	0.082008567	0.087991799	0.103931235	0.144159808	0.249479388	0.52746699
0.1225 ns	0.104958512	0.107539506	0.114209563	0.130654845	0.170970898	0.276350087	0.554475743
0.2823 ns	0.139050373	0.142761554	0.152165098	0.17450866	0.223749235	0.331604442	0.609883422
0.6507 ns	0.179893735	0.185750028	0.200551907	0.234736487	0.30479517	0.44438907	0.732915611
1.5000 ns	0.233155411	0.241819497	0.264017521	0.315357007	0.420857791	0.621640693	0.993970179
rise_trans							

Transition Time \ Load Cap	0.5000 fF	1.3000 fF	3.5000 fF	9.4000 fF	24.9000 fF	66.2000 fF	175.8000 fF
0.0100 ns	0.036092069	0.038895328	0.046425334	0.067158641	0.121764259	0.267677911	0.654410352
0.0231 ns	0.036159309	0.038738926	0.046350466	0.067128808	0.121748652	0.267689746	0.654396673
0.0531 ns	0.036246295	0.039207719	0.04659924	0.067215047	0.121773167	0.267657532	0.654386185
0.1225 ns	0.041684462	0.044379982	0.051024275	0.069781479	0.122356515	0.267652835	0.654382244
0.2823 ns	0.062946382	0.065468934	0.072873964	0.092224024	0.138142044	0.271688637	0.654376255
0.6507 ns	0.105847733	0.109119362	0.11779601	0.14024037	0.193265945	0.316516628	0.664786602
1.5000 ns	0.190933172	0.194706886	0.205089822	0.232492114	0.29814379	0.44461649	0.769523207
fall_trans							
Transition Time \ Load Cap	0.5000 fF	1.3000 fF	3.5000 fF	9.4000 fF	24.9000 fF	66.2000 fF	175.8000 fF
0.0100 ns	0.034393244	0.035906314	0.041596962	0.055351445	0.089963138	0.180856637	0.42209392
0.0231 ns	0.034321275	0.036006718	0.041483462	0.055261402	0.089983853	0.180850514	0.42210309
0.0531 ns	0.033247893	0.035916899	0.040883428	0.054809934	0.089871104	0.180779712	0.42213174
0.1225 ns	0.037327585	0.038665368	0.04338779	0.056543068	0.090178059	0.180788378	0.422121143
0.2823 ns	0.053328368	0.055197584	0.060804175	0.074249803	0.105446433	0.186860125	0.422178126
0.6507 ns	0.085463048	0.088291895	0.096389419	0.114610222	0.15332057	0.235469822	0.442511492
1.5000 ns	0.14214697	0.146779453	0.158594767	0.18620387	0.24293219	0.352148082	0.56670804

MIN3_x4_pin A

cell_fall							
Transition Time \ Load Cap	0.5000 fF	1.3000 fF	3.5000 fF	9.4000 fF	24.9000 fF	66.2000 fF	175.8000 fF
0.0100 ns	0.045143711	0.04596313	0.048098277	0.053869033	0.06808581	0.103774327	0.195700077
0.0231 ns	0.047323898	0.048183793	0.050404361	0.056442223	0.071076124	0.107456483	0.199819382
0.0531 ns	0.054757935	0.055587756	0.057821493	0.064102614	0.079052271	0.11612536	0.209254536
0.1225 ns	0.07191853	0.073323996	0.07620273	0.083539798	0.100014634	0.137239082	0.231204312
0.2823 ns	0.093422029	0.094993481	0.099801608	0.110355011	0.134260233	0.184628461	0.283364344
0.6507 ns	0.11429589	0.116442116	0.122986089	0.13818736	0.17366252	0.248180885	0.390281814
1.5000 ns	0.121566255	0.12521383	0.134126108	0.156511554	0.207756432	0.316630654	0.527183106
cell_rise							
Transition Time \ Load Cap	0.5000 fF	1.3000 fF	3.5000 fF	9.4000 fF	24.9000 fF	66.2000 fF	175.8000 fF
0.0100 ns	0.04659377	0.047896609	0.05122769	0.06096362	0.083690534	0.13999876	0.28449697
0.0231 ns	0.05026437	0.051366507	0.054467444	0.064009818	0.087282416	0.143917798	0.288857582
0.0531 ns	0.060015903	0.061952013	0.065426446	0.074286489	0.096528699	0.153583103	0.299464024
0.1225 ns	0.081331486	0.083077416	0.088056735	0.098624125	0.12131201	0.177738373	0.32422572
0.2823 ns	0.10374747	0.106554315	0.114214564	0.132074154	0.168342306	0.236551406	0.382787206
0.6507 ns	0.134395381	0.138580838	0.149376727	0.175204262	0.230112633	0.335827016	0.520778131
1.5000 ns	0.196597461	0.202284693	0.217093784	0.252293801	0.327755583	0.478663209	0.754672608
rise_trans							

Transition Time \ Load Cap	0.5000 fF	1.3000 fF	3.5000 fF	9.4000 fF	24.9000 fF	66.2000 fF	175.8000 fF
0.0100 ns	0.039543967	0.040816008	0.044618384	0.054664775	0.082071525	0.155367059	0.349666394
0.0231 ns	0.039317005	0.040574378	0.044395514	0.054500001	0.081987856	0.155319114	0.349672874
0.0531 ns	0.039138254	0.040630334	0.044230282	0.05463336	0.081897577	0.155239749	0.349630511
0.1225 ns	0.05026553	0.051168868	0.053372429	0.060709564	0.084131084	0.155336413	0.34962677
0.2823 ns	0.075290986	0.076709707	0.080991206	0.091650763	0.116853297	0.170187008	0.349885154
0.6507 ns	0.11644664	0.118328582	0.12370584	0.137740884	0.171267981	0.243174162	0.392448493
1.5000 ns	0.188991895	0.19131553	0.197501314	0.215147108	0.260442289	0.361744869	0.557230112
fall_trans							
Transition Time \ Load Cap	0.5000 fF	1.3000 fF	3.5000 fF	9.4000 fF	24.9000 fF	66.2000 fF	175.8000 fF
0.0100 ns	0.02737023	0.028096337	0.030742483	0.037015133	0.053834081	0.098330965	0.217241317
0.0231 ns	0.027350194	0.028081175	0.030690483	0.037021193	0.053879252	0.098429283	0.217182963
0.0531 ns	0.026526174	0.02755552	0.030292278	0.03683058	0.05357564	0.098280454	0.217223864
0.1225 ns	0.034987278	0.035947676	0.038222176	0.044319946	0.058029458	0.099010948	0.217088517
0.2823 ns	0.049957574	0.051712494	0.054967502	0.06467096	0.084720798	0.12481995	0.224405749
0.6507 ns	0.07888501	0.080602144	0.086551842	0.100474377	0.130520995	0.189729732	0.29604618
1.5000 ns	0.132447745	0.135789528	0.144679642	0.165716105	0.210292771	0.297228514	0.453033984

MIN3_x4_pin B

cell_fall							

Transition Time \ Load Cap	0.5000 fF	1.3000 fF	3.5000 fF	9.4000 fF	24.9000 fF	66.2000 fF	175.8000 fF
0.0100 ns	0.049178764	0.050191094	0.05310041	0.059571303	0.075546255	0.113627641	0.207887352
0.0231 ns	0.052206023	0.053353659	0.05609485	0.062804983	0.078810307	0.117149194	0.211588637
0.0531 ns	0.060299767	0.061251977	0.063780793	0.070798994	0.087072217	0.125867546	0.220796403
0.1225 ns	0.081730328	0.083038979	0.085620029	0.092877533	0.108652613	0.147314366	0.242857093
0.2823 ns	0.112470563	0.11389963	0.118113682	0.12806903	0.150697098	0.198238801	0.295339617
0.6507 ns	0.146927866	0.149100919	0.154877704	0.169017036	0.201718836	0.271552563	0.407560974
1.5000 ns	0.175378077	0.178154576	0.18626886	0.206346432	0.252898664	0.354314298	0.555518395
cell_rise							
Transition Time \ Load Cap	0.5000 fF	1.3000 fF	3.5000 fF	9.4000 fF	24.9000 fF	66.2000 fF	175.8000 fF
0.0100 ns	0.053650988	0.055186117	0.058182058	0.066731311	0.087902559	0.142780228	0.286578166
0.0231 ns	0.058823388	0.059932927	0.062563222	0.071298783	0.092712353	0.148001591	0.291995406
0.0531 ns	0.069009764	0.070723669	0.074341504	0.082438949	0.103650056	0.159019185	0.30354851
0.1225 ns	0.091641739	0.092947175	0.097293539	0.105731055	0.127244601	0.182525174	0.327243593
0.2823 ns	0.119306631	0.121908699	0.127804772	0.142158661	0.172508697	0.235456178	0.379934518
0.6507 ns	0.149426157	0.152874959	0.162199887	0.184192657	0.230343722	0.32218379	0.49890168
1.5000 ns	0.194109346	0.199485625	0.213073799	0.245395641	0.313619213	0.446516225	0.693422551
rise_trans							
Transition Time \ Load	0.5000 fF	1.3000 fF	3.5000 fF	9.4000 fF	24.9000 fF	66.2000 fF	175.8000 fF

Cap							
0.0100 ns	0.038943605	0.04049211	0.04408887	0.054621998	0.081826904	0.155310247	0.349676214
0.0231 ns	0.039252245	0.040628886	0.044240129	0.054615516	0.08195725	0.155225877	0.349613278
0.0531 ns	0.039249969	0.040795622	0.044566562	0.054698489	0.081955696	0.15529358	0.349648105
0.1225 ns	0.044942483	0.045797949	0.048782762	0.057744203	0.083171899	0.15526331	0.349617488
0.2823 ns	0.06509056	0.066387399	0.070081444	0.079913876	0.105597968	0.166023758	0.349997494
0.6507 ns	0.106324511	0.107693286	0.111295945	0.122183922	0.15084702	0.222859966	0.386763567
1.5000 ns	0.195173337	0.196311708	0.199751945	0.210718759	0.243026878	0.32643387	0.519317923
fall_trans							
Transition Time \ Load Cap	0.5000 fF	1.3000 fF	3.5000 fF	9.4000 fF	24.9000 fF	66.2000 fF	175.8000 fF
0.0100 ns	0.032982578	0.034260341	0.036834063	0.043840049	0.060872492	0.106083576	0.224774737
0.0231 ns	0.03331637	0.034341387	0.036611811	0.043546697	0.061187962	0.106233273	0.224720613
0.0531 ns	0.032100516	0.03293997	0.03561531	0.04293025	0.060971789	0.106129775	0.224778751
0.1225 ns	0.038841005	0.03968494	0.041500529	0.047290427	0.062777264	0.105931621	0.224688021
0.2823 ns	0.057839385	0.059520941	0.062535352	0.071367656	0.089777624	0.127646924	0.230269202
0.6507 ns	0.091801089	0.09404007	0.09941102	0.112131885	0.139494427	0.194414956	0.297819573
1.5000 ns	0.150614307	0.153767412	0.161841842	0.181192669	0.222836539	0.305461449	0.456247232

MIN3_x4_pin C

cell_fall							
Transition Time \ Load Cap	0.5000 fF	1.3000 fF	3.5000 fF	9.4000 fF	24.9000 fF	66.2000 fF	175.8000 fF

0.0100 ns	0.051471713	0.052632272	0.055140199	0.061772732	0.07750673	0.115581958	0.209820594
0.0231 ns	0.054696167	0.055649162	0.058103578	0.064935285	0.080711416	0.118871198	0.213188599
0.0531 ns	0.061413076	0.062330418	0.064891139	0.071823357	0.08799327	0.126424745	0.220988747
0.1225 ns	0.078906204	0.080016255	0.083202254	0.089996866	0.106561818	0.145363236	0.240612808
0.2823 ns	0.108466561	0.110049675	0.113422874	0.12257842	0.143312643	0.188409393	0.286595407
0.6507 ns	0.143683598	0.145501308	0.150679305	0.163794244	0.193554212	0.257053828	0.382670032
1.5000 ns	0.173186161	0.176060042	0.183434007	0.202096606	0.245538695	0.339185288	0.523269788
cell_rise							
Transition Time \ Load Cap	0.5000 fF	1.3000 fF	3.5000 fF	9.4000 fF	24.9000 fF	66.2000 fF	175.8000 fF
0.0100 ns	0.059383233	0.060564207	0.063914964	0.071890949	0.092067513	0.144358771	0.281731955
0.0231 ns	0.065267285	0.066498751	0.069474521	0.07759091	0.097845803	0.150222789	0.287675461
0.0531 ns	0.077973379	0.07919741	0.082449231	0.090460486	0.110757703	0.163275233	0.300880799
0.1225 ns	0.103141688	0.104492343	0.108002124	0.116698748	0.137434838	0.189982665	0.327672065
0.2823 ns	0.136389288	0.138305011	0.143286282	0.155453546	0.183380691	0.244580389	0.382919755
0.6507 ns	0.176246217	0.179158782	0.186989459	0.206093685	0.248043091	0.333504249	0.502529641
1.5000 ns	0.234159078	0.23846081	0.249802013	0.277680769	0.339558145	0.465867033	0.702913146
rise_trans							
Transition Time \ Load Cap	0.5000 fF	1.3000 fF	3.5000 fF	9.4000 fF	24.9000 fF	66.2000 fF	175.8000 fF
0.0100 ns	0.034476093	0.035526223	0.039805144	0.049464893	0.076633882	0.148465197	0.339359743

0.0231 ns	0.034415218	0.036028522	0.039485938	0.049773267	0.076534216	0.148385144	0.339368079
0.0531 ns	0.034578515	0.036047782	0.040051258	0.049593121	0.076672165	0.148421691	0.339346527
0.1225 ns	0.040499348	0.041598962	0.045278171	0.053779828	0.07873185	0.148764529	0.339333541
0.2823 ns	0.061726358	0.06317884	0.066759211	0.076430844	0.100874272	0.161597472	0.340682958
0.6507 ns	0.104890607	0.106489725	0.110887801	0.122219414	0.150746426	0.217853492	0.377113227
1.5000 ns	0.187730225	0.189631142	0.194781334	0.20872828	0.244045367	0.327327913	0.509362361
fall_trans							
Transition Time \ Load Cap	0.5000 fF	1.3000 fF	3.5000 fF	9.4000 fF	24.9000 fF	66.2000 fF	175.8000 fF
0.0100 ns	0.033415781	0.034365569	0.036561564	0.043522744	0.061239521	0.106249481	0.224718114
0.0231 ns	0.033433646	0.034267139	0.036488582	0.04336206	0.061267616	0.106232719	0.224761236
0.0531 ns	0.032484132	0.033276403	0.036311876	0.043395087	0.061054272	0.106134853	0.22478216
0.1225 ns	0.036647025	0.037776682	0.039937779	0.045634195	0.062566499	0.106329228	0.224769893
0.2823 ns	0.052563618	0.053381477	0.056681057	0.063880972	0.080807319	0.120270189	0.228829065
0.6507 ns	0.083608086	0.085258647	0.089216646	0.099617496	0.122395973	0.170579887	0.274278385
1.5000 ns	0.138122782	0.140465079	0.146562279	0.161714818	0.195541758	0.264733251	0.397193189

Appendix B — Plotting the INV family

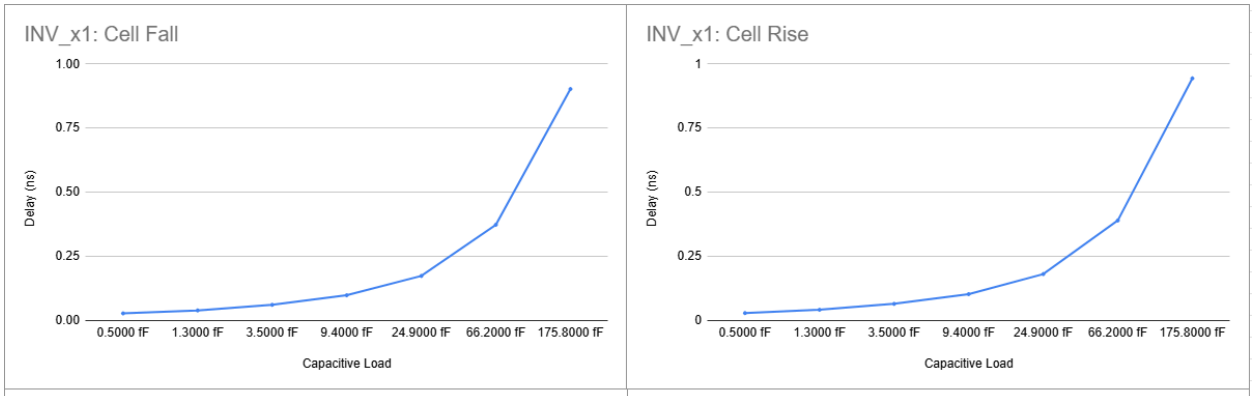

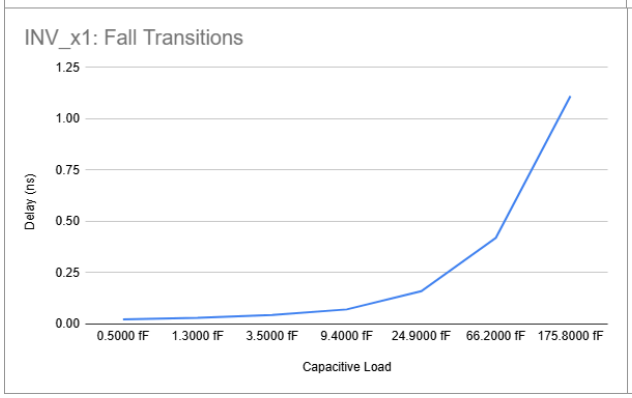

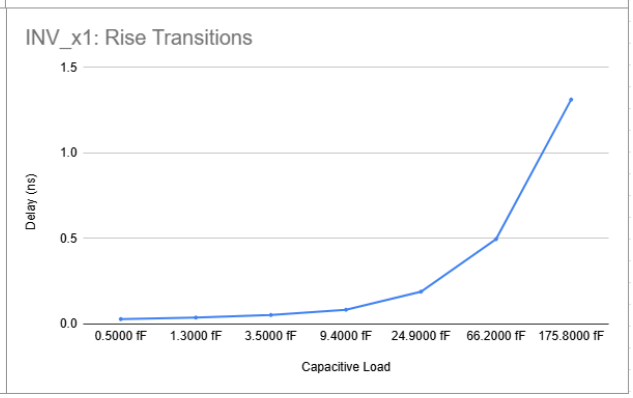

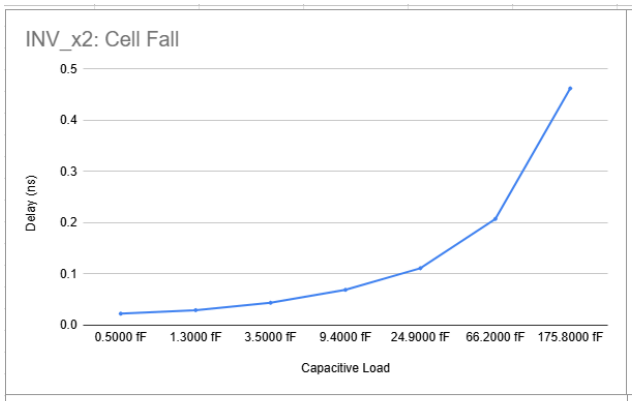

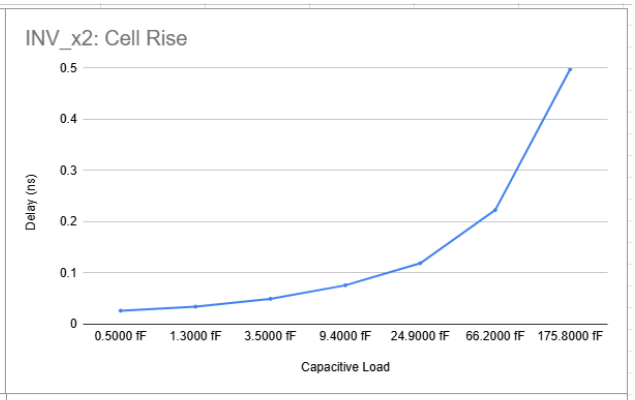

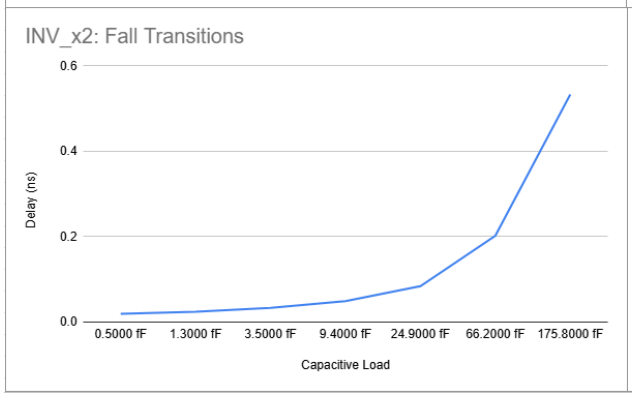

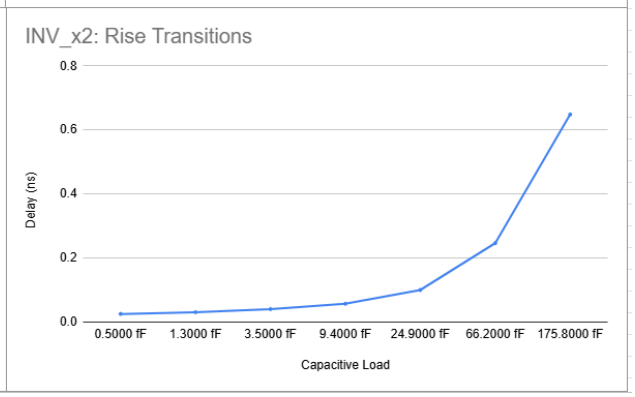

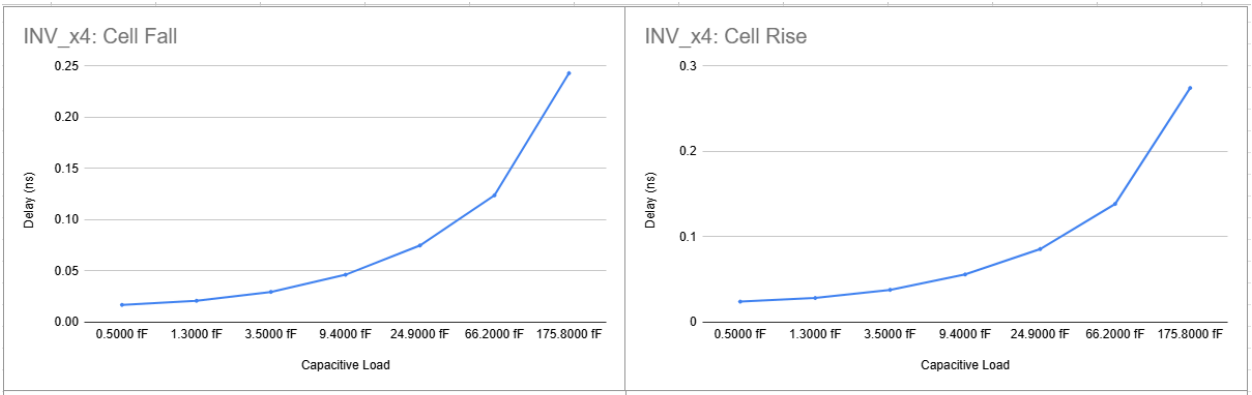
INV_x4: Cell Fall
Delay (ns)
0.25
0.20
0.15
0.10
0.05
0.00
0.5000 fF
1.3000 fF
3.5000 fF
9.4000 fF
24.9000 fF
66.2000 fF
175.8000 fF
Capacitive Load

INV_x4: Cell Rise
Delay (ns)
0.3
0.2
0.1
0
0.5000 fF
1.3000 fF
3.5000 fF
9.4000 fF
24.9000 fF
66.2000 fF
175.8000 fF
Capacitive Load

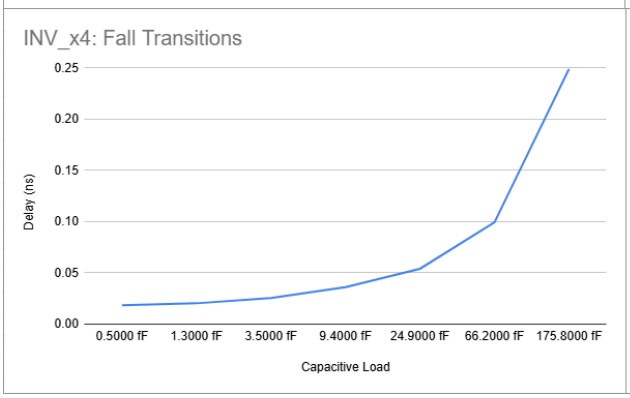
INV_x4: Fall Transitions
Delay (ns)
0.25
0.20
0.15
0.10
0.05
0.00
0.5000 fF
1.3000 fF
3.5000 fF
9.4000 fF
24.9000 fF
66.2000 fF
175.8000 fF
Capacitive Load

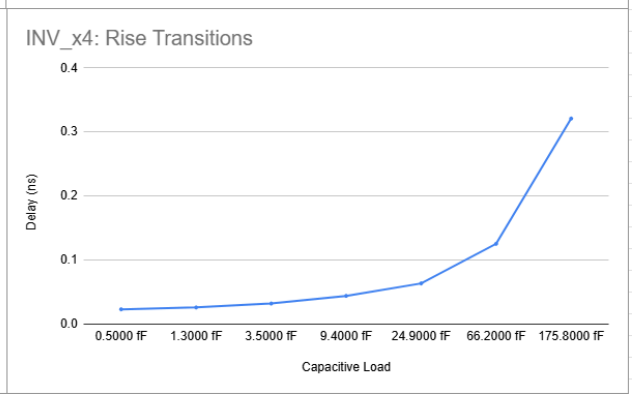
INV_x4: Rise Transitions
Delay (ns)
0.4
0.3
0.2
0.1
0.0
0.5000 fF
1.3000 fF
3.5000 fF
9.4000 fF
24.9000 fF
66.2000 fF
175.8000 fF
Capacitive Load

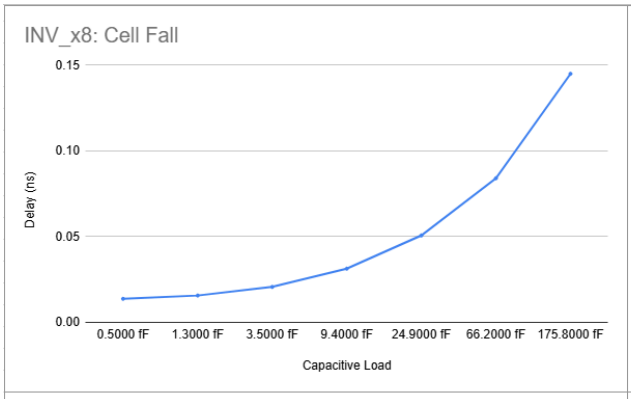
INV_x8: Cell Fall
Delay (ns)
0.15
0.10
0.05
0.00
0.5000 fF
1.3000 fF
3.5000 fF
9.4000 fF
24.9000 fF
66.2000 fF
175.8000 fF
Capacitive Load

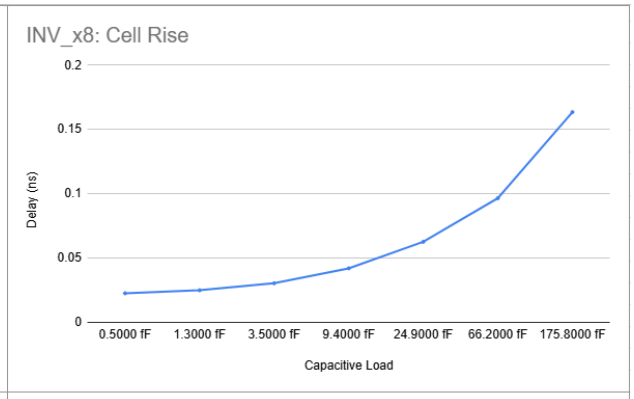
INV_x8: Cell Rise
Delay (ns)
0.2
0.15
0.1
0.05
0
0.5000 fF
1.3000 fF
3.5000 fF
9.4000 fF
24.9000 fF
66.2000 fF
175.8000 fF
Capacitive Load

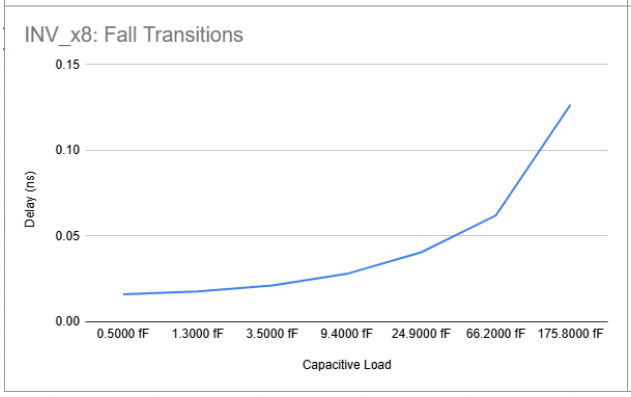
INV_x8: Fall Transitions
Delay (ns)
0.15
0.10
0.05
0.00
0.5000 fF
1.3000 fF
3.5000 fF
9.4000 fF
24.9000 fF
66.2000 fF
175.8000 fF
Capacitive Load

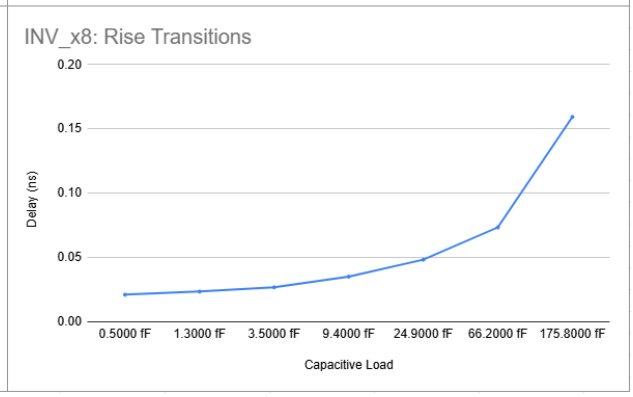
INV_x8: Rise Transitions
Delay (ns)
0.20
0.15
0.10
0.05
0.00
0.5000 fF
1.3000 fF
3.5000 fF
9.4000 fF
24.9000 fF
66.2000 fF
175.8000 fF
Capacitive Load

Appendix C — Circuit diagram

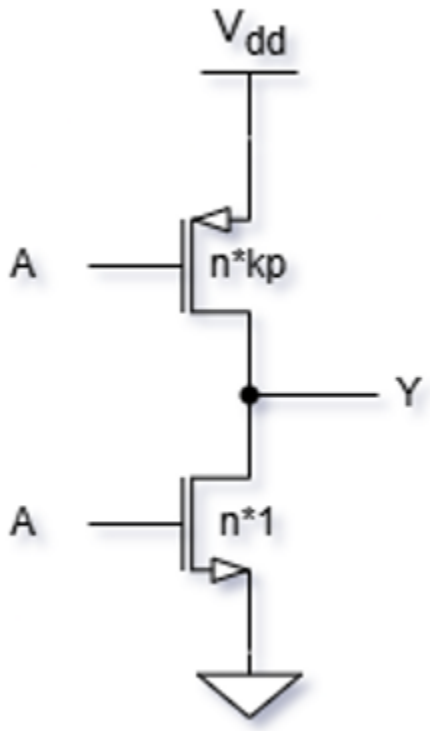

INV_xN

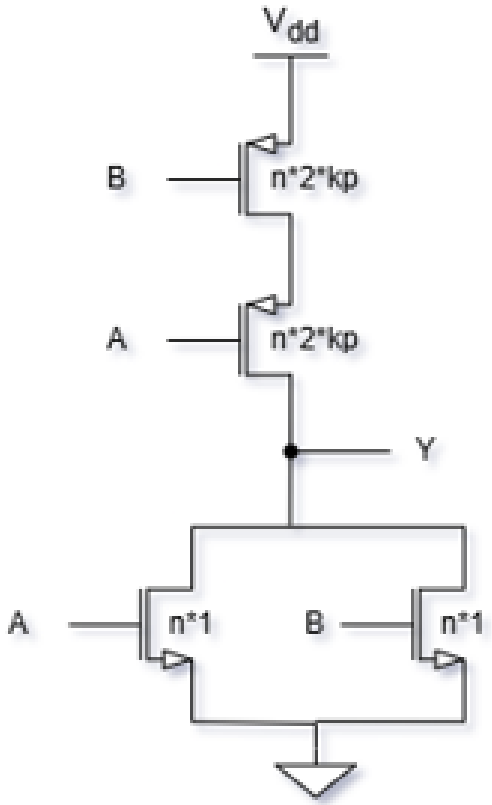

NOR2_xN

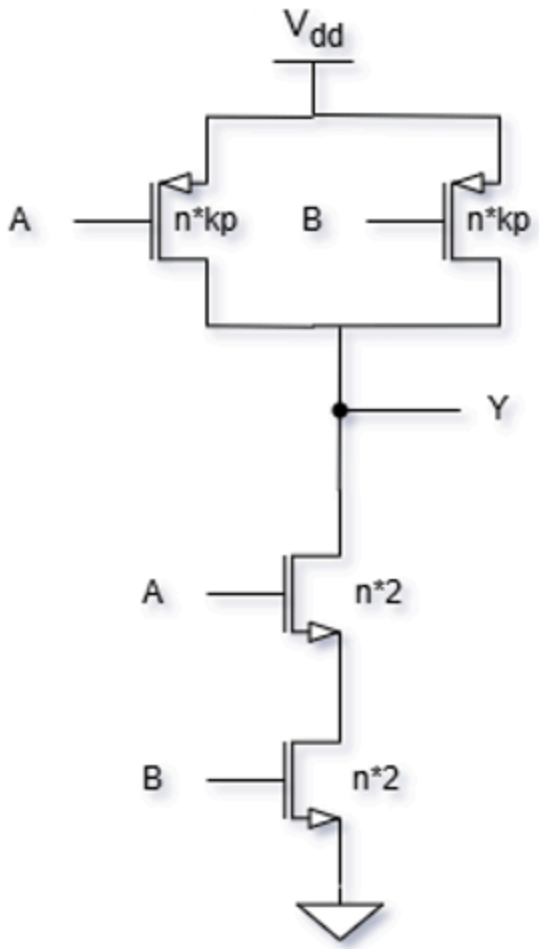

NAND2_xN

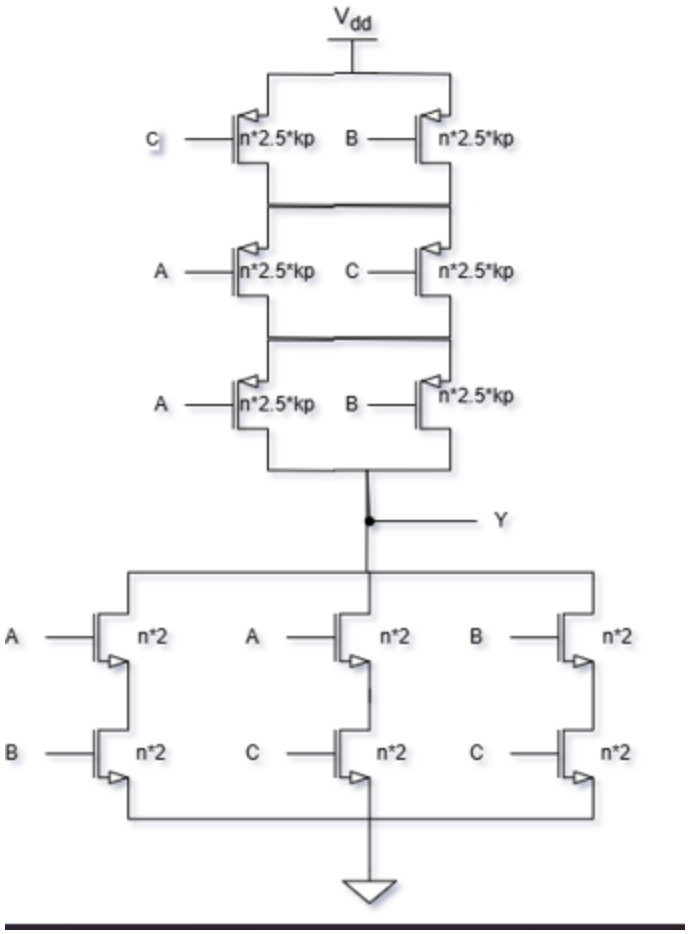
Vdd
C
n*2.5*kp
B
n*2.5*kp
A
n*2.5*kp
C
n*2.5*kp
A
n*2.5*kp
B
n*2.5*kp
Y
A
n*2
A
n*2
B
n*2
B
n*2
C
n*2
C
n*2

MIN3_xN