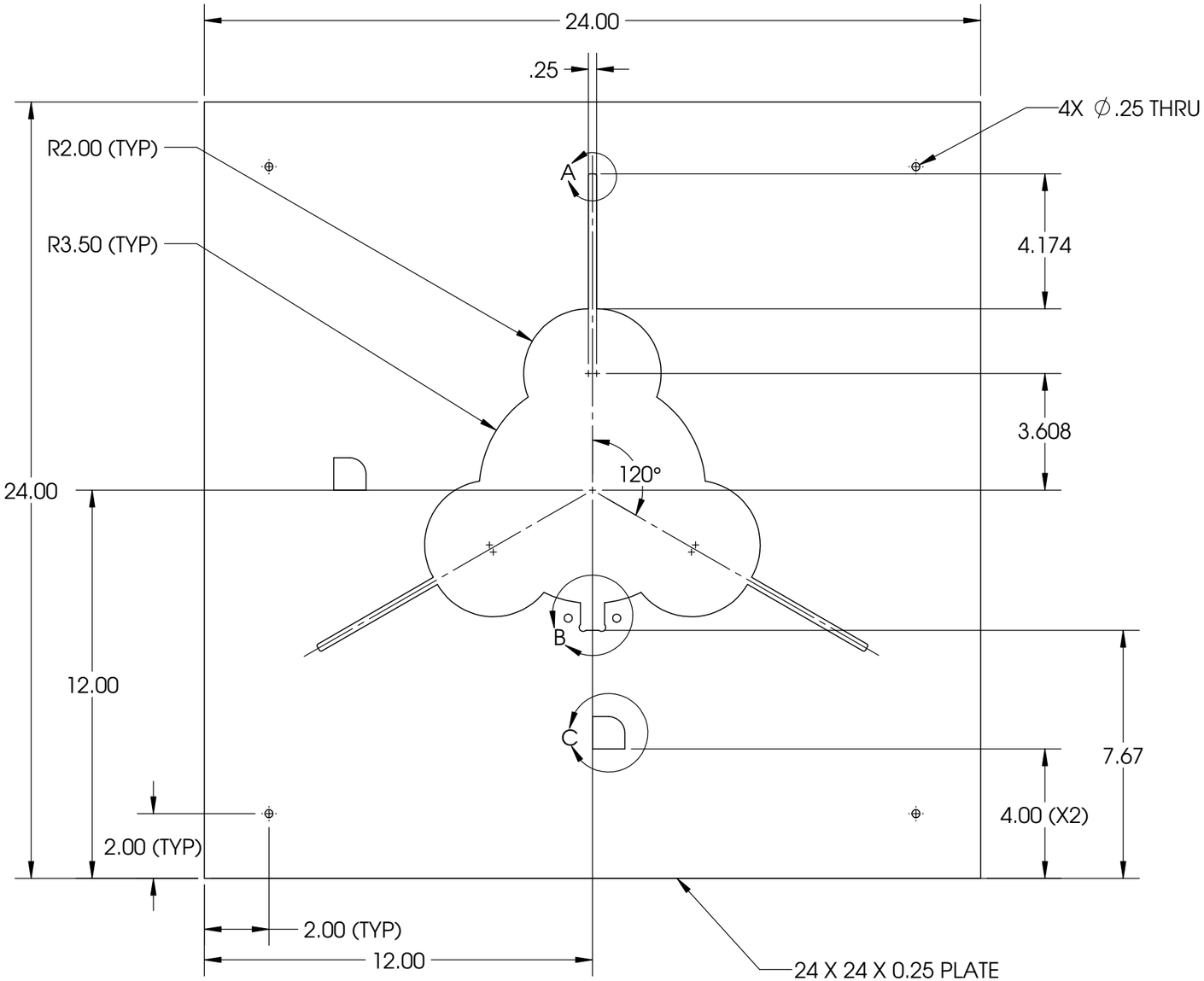

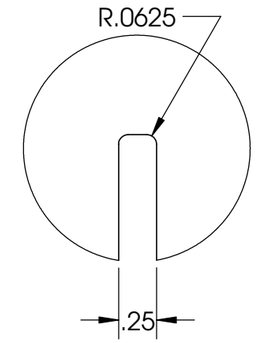

DETAIL A
SCALE 1 : 1

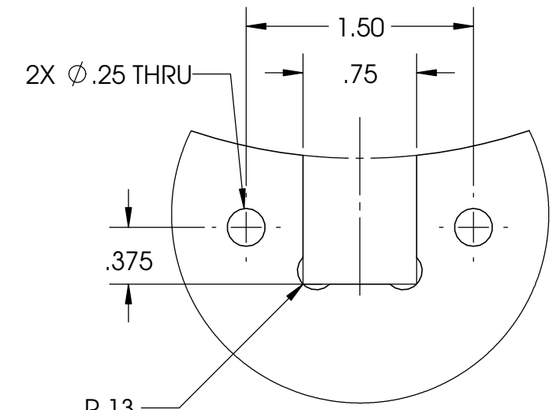

DETAIL B
SCALE 1 : 1

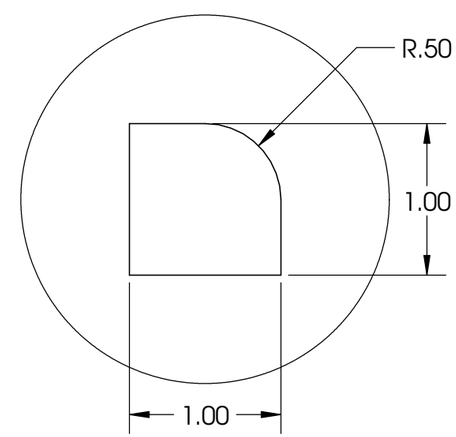

DETAIL C
SCALE 1 : 1

	NAME	DATE
DRAWN	Josh C.	12/21/16
CHECKED	Joe S.	2016-12-20
ENG APPR.	Joe S.	2017-4-5
MFG APPR.		
Q.A.		

COMMENTS:
Tolerances are ±0.001 unless noted otherwise

PORTLAND STATE AEROSPACE SOCIETY

TITLE:
Mid Fin Jig

SIZE B | DWG. NO. | REV A

SCALE: 1:4 | WEIGHT: | SHEET 1 OF 1

SOLIDWORKS Educational Product. For Instructional Use Only.