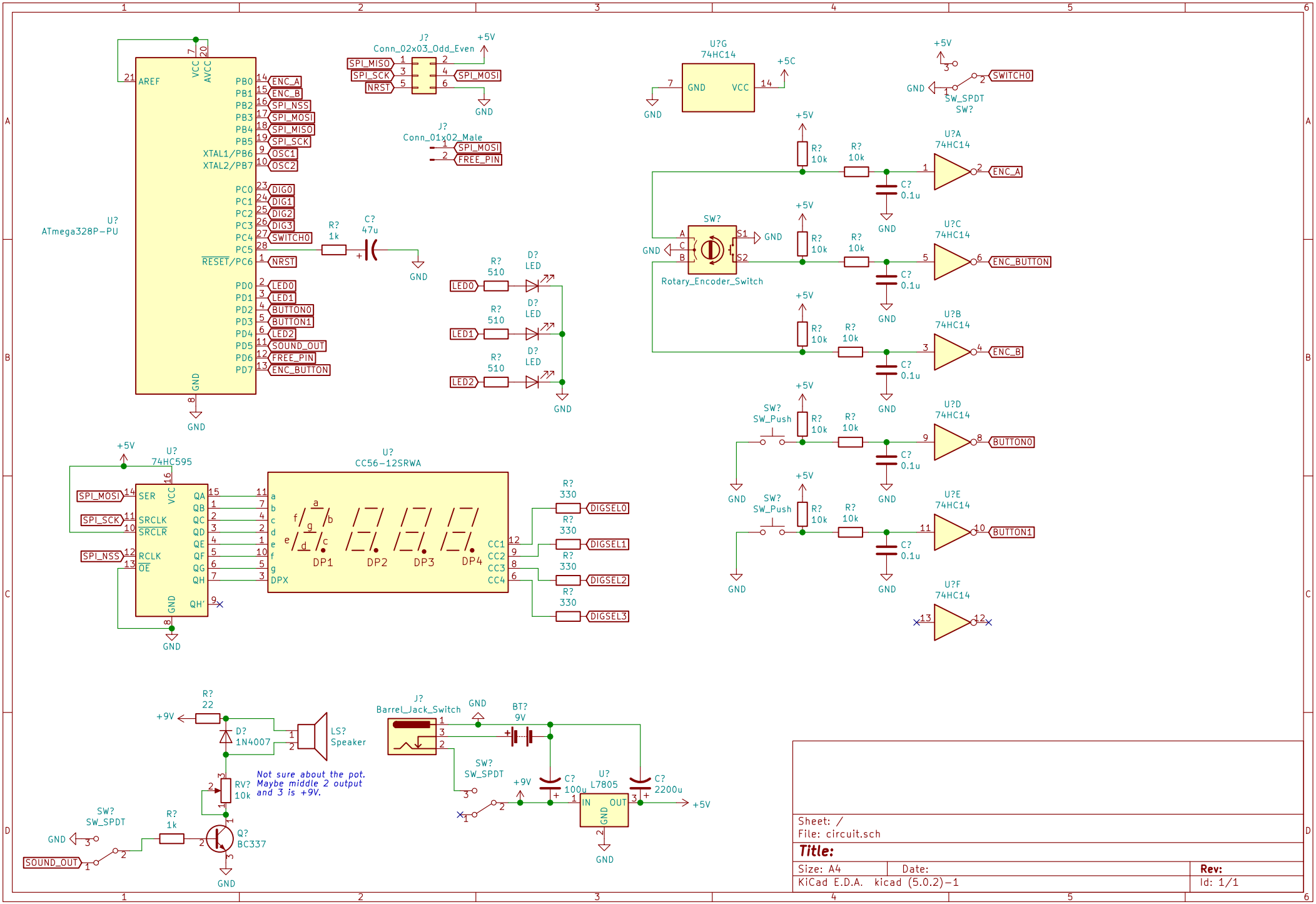
U?
ATmega328P-PU
AREF
VCC
AVCC
PB0 ENC_A
PB1 ENC_B
PB2 SPI_NSS
PB3 SPI_MOSI
PB4 SPI_MISO
PB5 SPI_SCK
XTAL1/PB6 OSC1
XTAL2/PB7 OSC2
PC0 DIG0
PC1 DIG1
PC2 DIG2
PC3 DIG3
PC4 SWITCH0
PC5
RESET/PC6 NRST
PD0 LED0
PD1 LED1
PD2 BUTTON0
PD3 BUTTON1
PD4 LED2
PD5 SOUND_OUT
PD6 FREE_PIN
PD7 ENC_BUTTON
GND
R? 1k
C? 47u
J? Conn_02x03_Odd_Even
SPI_MISO
SPI_SCK
NRST
SPI_MOSI
+5V
J? Conn_01x02_Male
SPI_MOSI
FREE_PIN
R? 510
D? LED
LED0
LED1
LED2
U? 74HC595
SER
SRCLK
SRCLR
RCLK
OE
QA
QB
QC
QD
QE
QF
QG
QH
QH'
U? CC56-12SRWA
DP1
DP2
DP3
DP4
DPX
CC1
CC2
CC3
CC4
R? 330
DIGSEL0
DIGSEL1
DIGSEL2
DIGSEL3
U?G 74HC14
+5C
SW? SW_SPDT
SWITCH0
Rotary_Encoder_Switch
R? 10k
C? 0.1u
U?A 74HC14
ENC_A
U?C 74HC14
ENC_BUTTON
U?B 74HC14
ENC_B
SW? SW_Push
U?D 74HC14
BUTTON0
U?E 74HC14
BUTTON1
U?F 74HC14
R? 22
+9V
D? 1N4007
LS? Speaker
RV? 10k
Not sure about the pot.
Maybe middle 2 output
and 3 is +9V.
Q? BC337
SOUND_OUT
J? Barrel_Jack_Switch
BT? 9V
C? 100u
U? L7805
IN
OUT
C? 2200u
Sheet: /
File: circuit.sch
Title:
Size: A4
Date:
Rev:
KiCad E.D.A. kicad (5.0.2)-1
Id: 1/1